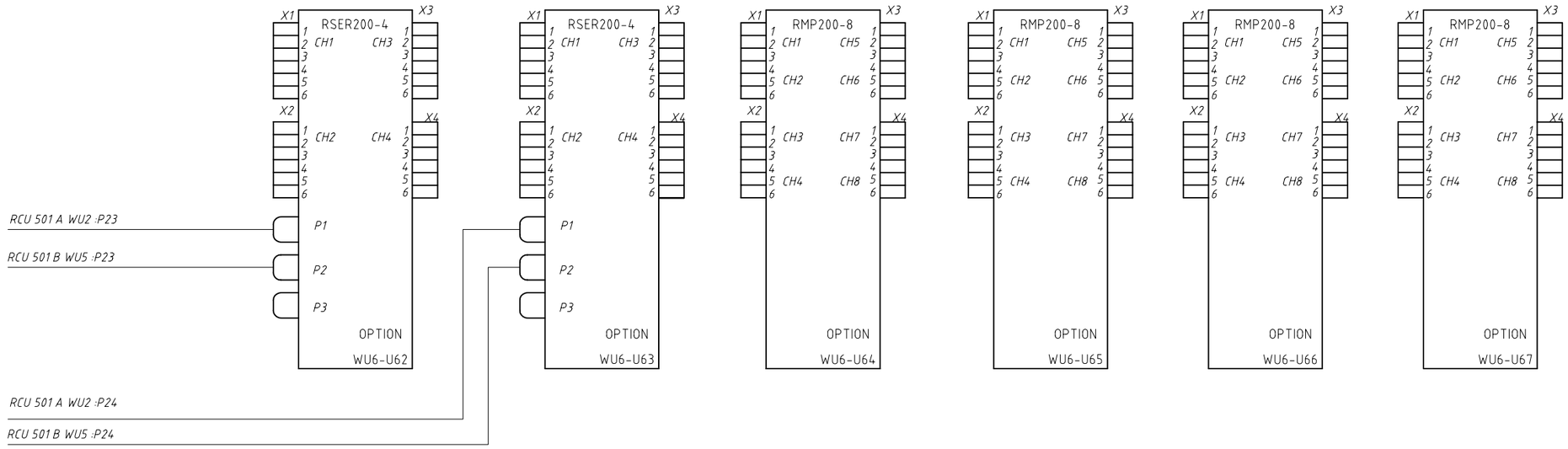

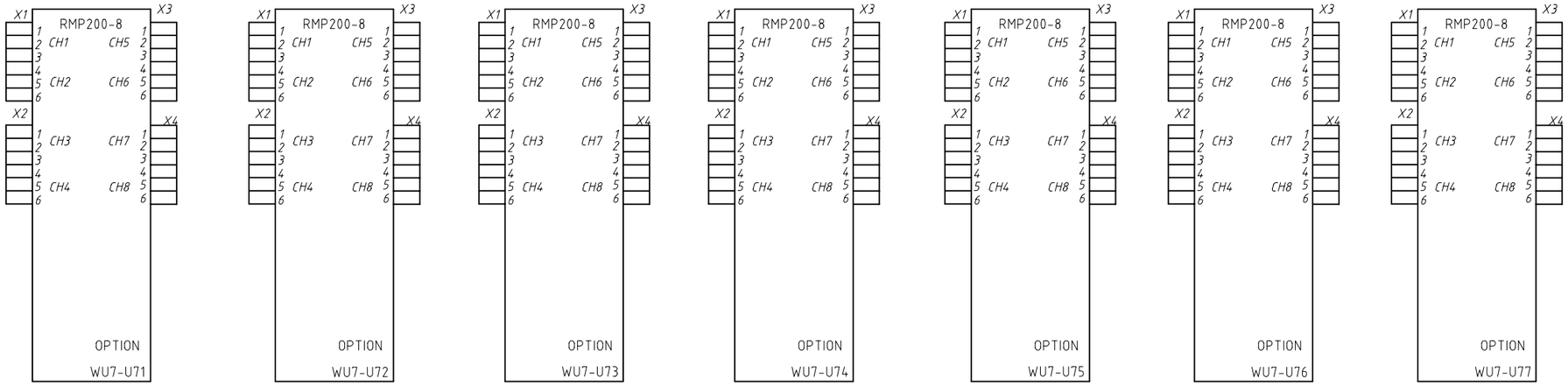

MARKINGS:

ALL CONNECTORS, CABLES & COMPONENTS SHOULD BE MARKED
IN ACCORDANCE WITH: MARKING & LABELLING SPECIFICATION, 848-161013

REV.	DATE	REASON FOR ISSUE	PREPARED	CHECKED	APPROVED
B	25.10.06	As Built	CJ	AG	EB
A	14.03.06	First Issue	CJ	DEW	EB

KONGSBERG
Kongsberg Maritime AS

PROJECT NAME: BASIS

DRAWING TITLE: Termination Diagram
88 ch I/O, 8 ch Serial, B-Section
DPC-2

DRAWING NO.: 1013823 — 1 OF 1 — B

SCALE: - AT A3 | SIZE | BASIS ✕ | CUSTOM SPEC. | SHEET | REV.

DRAWING ID.

The copyright of this drawing and of all annexes which are entrusted to a person's care always remain the property of Kongsberg Maritime AS
They must not be copied or duplicated nor shown to or placed at the disposal of third persons without our written consent.