武汉船用机械有限责任公司

Wuhan Marine Machinery Plant Co., Ltd. (WMMP)

武汉船用机械有限责任公司
WMMP WUHAN MARINE MACHINERY PLANT CO., LTD.

Add：NO.9 Wudong Street Qingshan Wuhan Hubei China

Contact：Yayue Zong

Tel：（86-27）68867129

Email：wmmp@ public.wh.hb.cn

TYPE-3 型 150 人生活辅助平台
1320T Electric Rack And Pinion Jacking System

QINGDAO HISEA HEAVY-DUTY MACHINERY CO.,LTD.

HULL NO: HX2330/HX2331

目录 CONTENT

1.完工图 Finished drawing.....3

1.1 机械完工图 Mechanical finish drawing.....5

1.2 液压完工图 Hydraulic finish drawing.....13

1.3 电气完工图 Electrical finish drawing.....17

2.使用维护手册 Operation and maintenance manual.....869

3.备品备件清单 Spare parts list.....1104

项目编号:

工程编号: 平台升 28AB-1

工程名称: 1320T 电动齿轮齿条升降系统

1320T 电动齿轮齿条升降系统

1320T Electric Rack and Pinion Jacking System

完工图 Finished Drawing

					1320T Electric Rack and Pinion Jacking system	资料编号	HJ/Y-PTS28AB-1-WG
标记	数量	修改单号	签字	日期			

设 计			完工图 Finished Drawing	标 记	版 本
校 核					
审 核					
审 定					
会 签				武汉船用机械有限责任公司 WMMP WUHAN MARINE MACHINERY PLANT CO., LTD.	
批 准					
军代表					

完工图目录 Finished Drawing Directory

序号 No.	名称 Title	编号 Drawing No.	页数 Page number	备注 Remark
1.	升降装置 Jacking mechanism	0422PTS28A-1-01-00WG	1	
2.	安装架 Jackcase	0422PTS28A-1-01-01WG	1	
3.	升降单元 Jacking unit	0422PTS28A-1-01-02-00WG	1	
4.	电机及制动器 Electric motor and break	0422PTS28A-1-01-02-01WG	1	
5.	齿轮箱 Gearbox	0422PTS28A-1-01-02-02WG	1	
6.	锁紧楔块组件 Subassembly of locking wedge	0422PTS28A-1-01-03-00WG	1	
7.	编码器组件 Encoder assembly	0422PTS28A-1-01-04-00WG	1	
8.	齿条布置图 Rack layout diagram	0422PTS28B-1-00WG	1	
9.	液压完工图	HJY-PTS28A-1-S-YYWG	4	
10.	电气完工图(中文）	HJY-PTS28A-1-03WG	424	
11.	电气完工图(英文）	HJY-PTS28A-1-03WG	417	

0422PTS28A-1-01-00WG

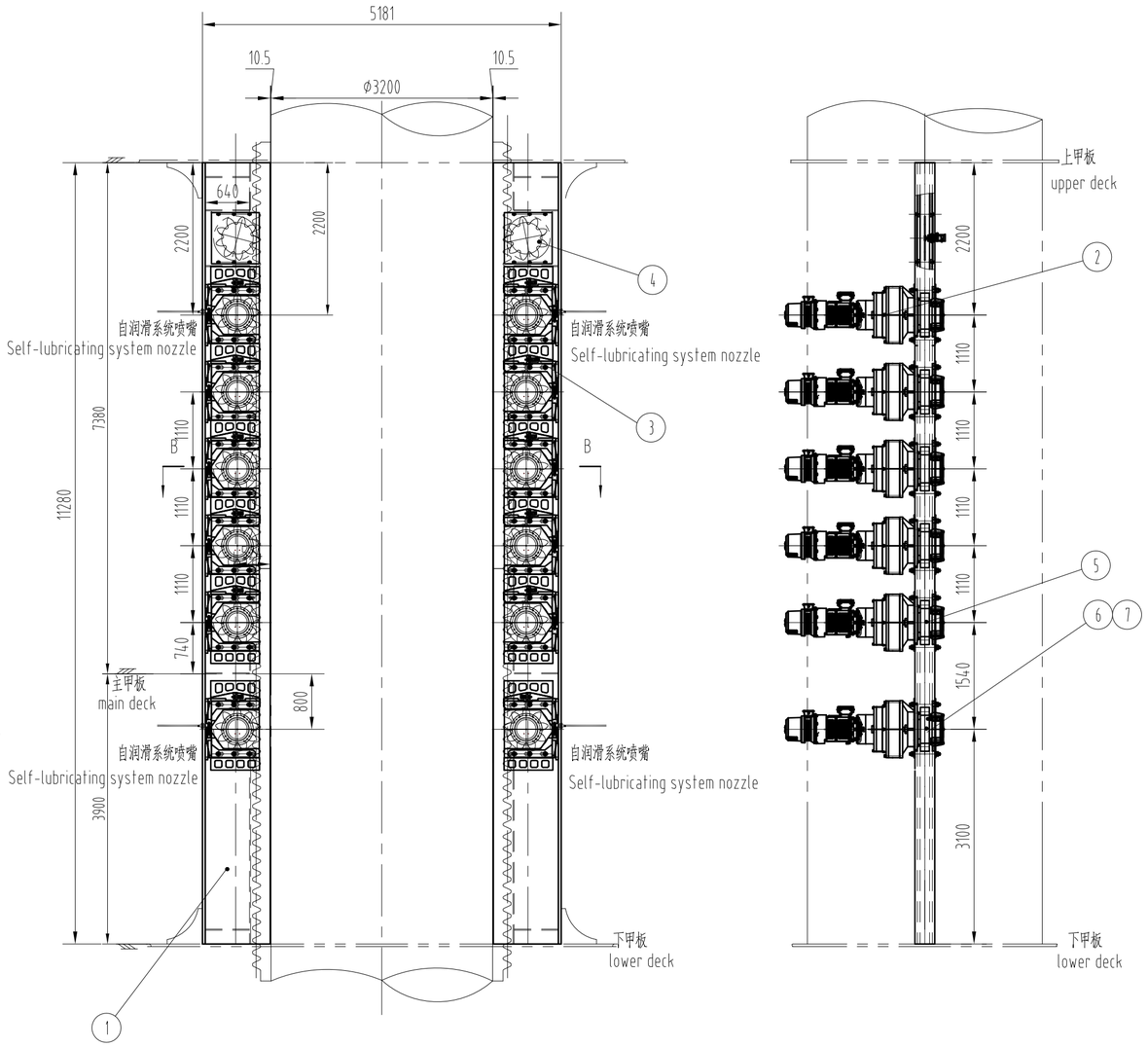

B-B

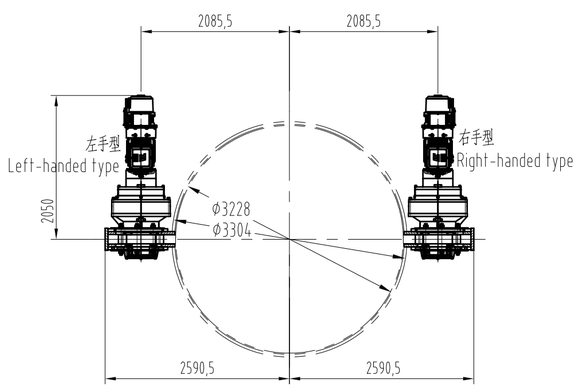

序号	代号	名称	数量	牌号 / 材料	标准号	单重 / 重量	总重 / 重量	备注
7	GB 827-86	铆钉 Rivets for rame plate M3×5	4	成品 Finished product		0.1	0.4	
6	MP042C03/01	铭牌 Nameplate	1	成品 Finished product		0.4	0.4	
5	0422PTS28A-1-01-05-00WG	自动润滑系统 Self-lubrication system	1	组件 component		500	500	
4	0422PTS28A-1-01-04-00WG	编码器组件 Encoder module	2	组件 component		84	168	
3	0422PTS28A-1-01-03-00WG	锁紧楔块组件 Subassembly of locking wedge	1	组件 component		1503	1503	
2	0422PTS28A-1-01-02-00WG	升降单元 Jacking unit	12	组件 component		3200	38400	
1	0422PTS28A-1-01-01WG	安装架 Jackcase	2	结构件 structural component		7429	14858	

标记	重量	修改单号	签字	日期

设计		
校核		
审核		
标检		
审定		
批准		

1320T电动齿轮齿条升降系统 1320T electric rack and pinion jacking system

升降装置 Jacking mechanism

组件 componnet

所属装配图号	0422PTS28A-1-00WG
图号	0422PTS28A-1-01-00WG
标记	S
版本	
重量	55429.8
比例	1:60
共 1 页	第 1 页

武汉船用机械有限责任公司

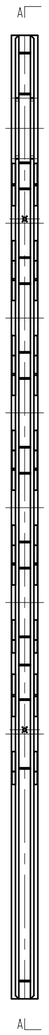

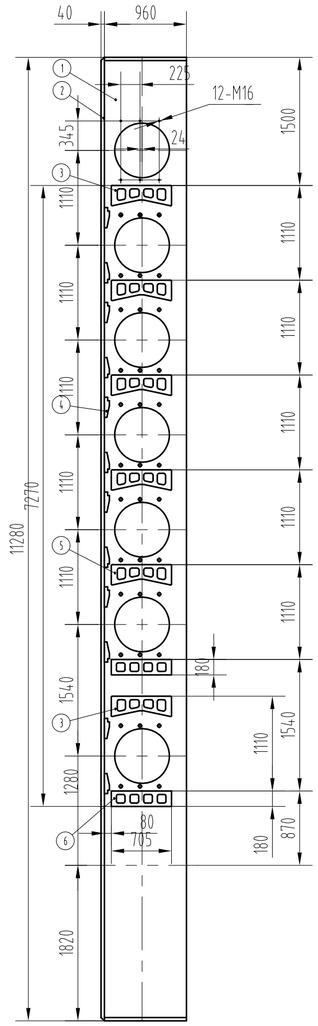

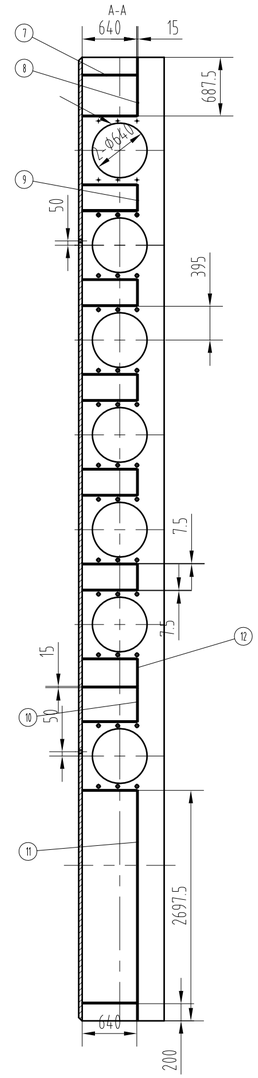

序号	代号	名称	数量	牌号	标准号	单重	总重	备注
				材料		重量		
13		焊缝 weld	1			290	290	
12		PL15×136×322.5	1	ABS-EH36		5.2	5.2	
11		PL15×136×2697.5	1	ABS-EH36		43.2	43.2	
10		PL15×136×397.5	1	ABS-EH36		6.37	6.37	
9		PL15×136×305	5	ABS-EH36		4.9	24.5	
8		PL15×136×687.5	1	ABS-EH36		11	11	
7		PL15×136×640	17	ABS-EH36		10.3	175.1	
6		PL40×180×705	4	ABS-EH36		27.8	111.2	
5		PL40×240×705	8	ABS-EH36		31.1	248.8	
4		PL40×57×235	24	ABS-EH36		3.4	81.6	
3		PL40×240×705	4	ABS-EH36		31.1	124.4	
2		PL40×310×11280	1	ABS-EH36		1098	1098	
1		PL40×960×11280	2	ABS-EH36		2607.4	5214.8	

标记	数量	修改单号	签字	日期

设计	
校核	
审核	
标检	
审定	
批准	

设计	
校对	
审核	
工艺	
标准	
批准	

1320T电动齿条齿轮千斤顶系统 1320T electric rack and pinion jacking system

安装架 Jackcase

结构件 Structural component

所属装配图号	0422PTS28A-1-01-00WG
图号	0422PTS28A-1-01-01WG

标记	版本	重量	比例
S		7434.17	1:50

共 1 页 第 1 页

武汉船用机械有限责任公司

0422PTS28A-1-01-02-00WG

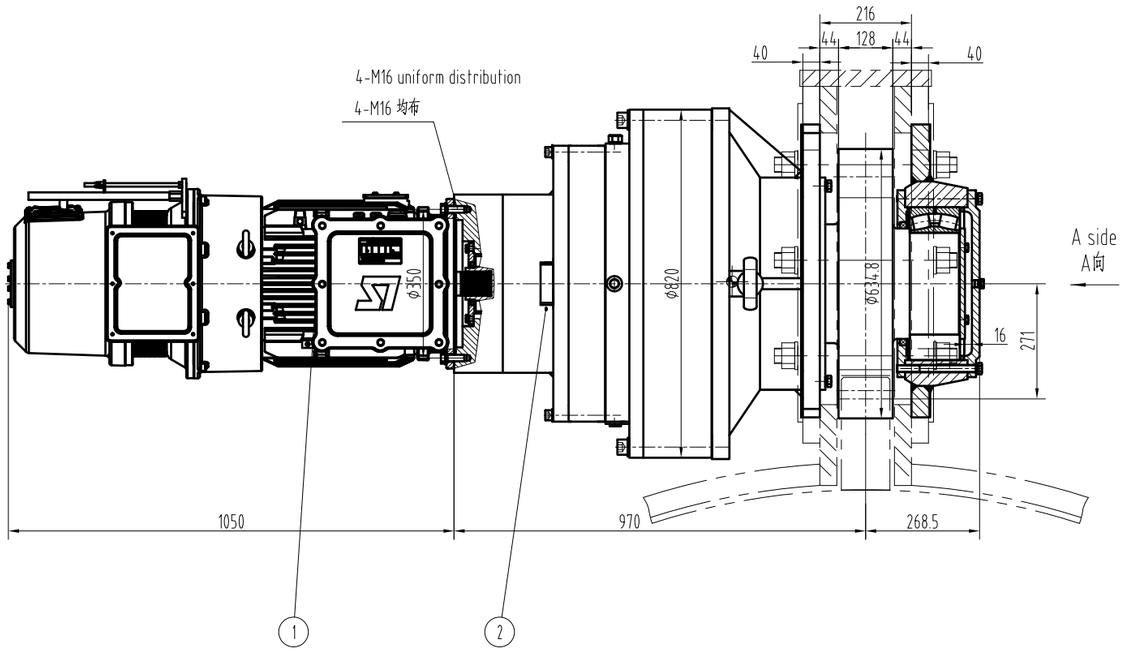

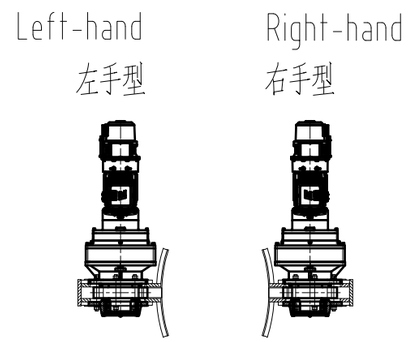

A side
A向

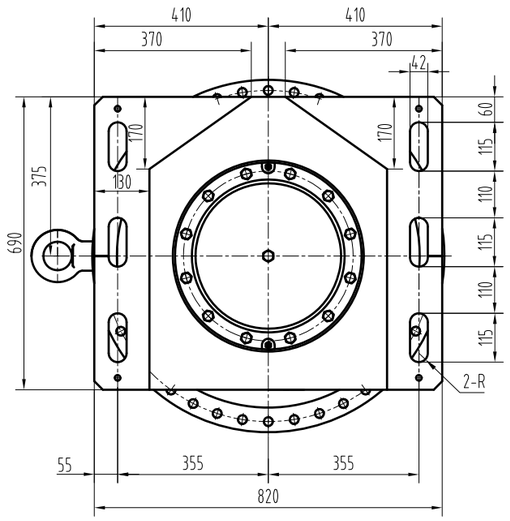

序号	代号	名称	数量	牌号	标准号	单重	总重	备注
2	0422PTS28A-1-01-02-02WG	齿轮箱 Gearbox	1	成品 Finished product		2300	2300	
1	0422PTS28A-1-01-02-01WG	电机及制动器 Electric motor and brake	1	成品 Finished product		400	400	

材料 重量

标记	数量	修改单号	签字	日期

设计	
校对	
审核	
工艺	
标准	
批准	

设计	
校核	
审核	
标检	
审定	
批准	

1320T电动齿轮齿条升降系统 1320T electric rack and pinion jacking system

升降单元 Jacking unit

组件 component

所属装配图号	0422PTS28A-1-01-00WG
图号	0422PTS28A-1-01-02-00WG
标记	S
版本	
重量	2700
比例	1:10
共 1 页	第 1 页

WUHAIP 武汉船用机械有限责任公司

0422PTS28A-1-01-02-01WG

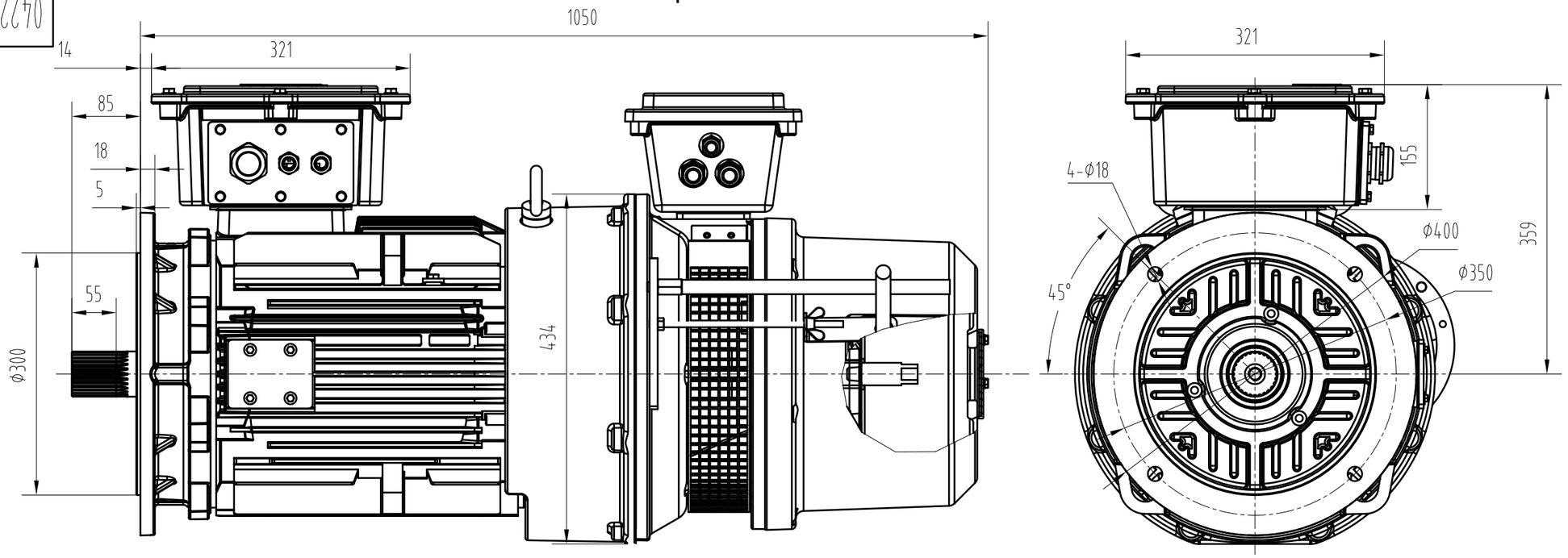

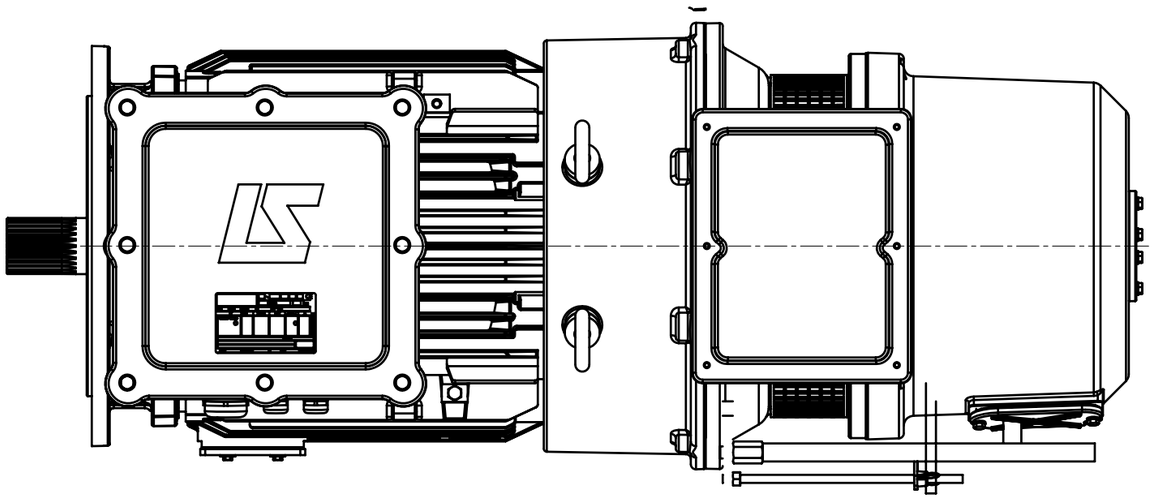

设计	
校对	
审核	
工艺	
标准	
批准	

标记	数量	修改单号	签字	日期
设计				
校核				
审核				
标检				
审定				
批准				

1320T电动齿轨齿条升降系统 1320T electric rack and pinion jacking system

电机及制动器 Electric motor and brake

成品 Finished product

所属装配图号	0422PTS28A-1-01-02-00WG
图号	0422PTS28A-1-01-02-01WG

标记	版本	重量	比例
S		400	1:6

共 1 页 第 1 页

WUMMP 武汉船用机械有限责任公司

0422PTS28A-1-01-02-02WG

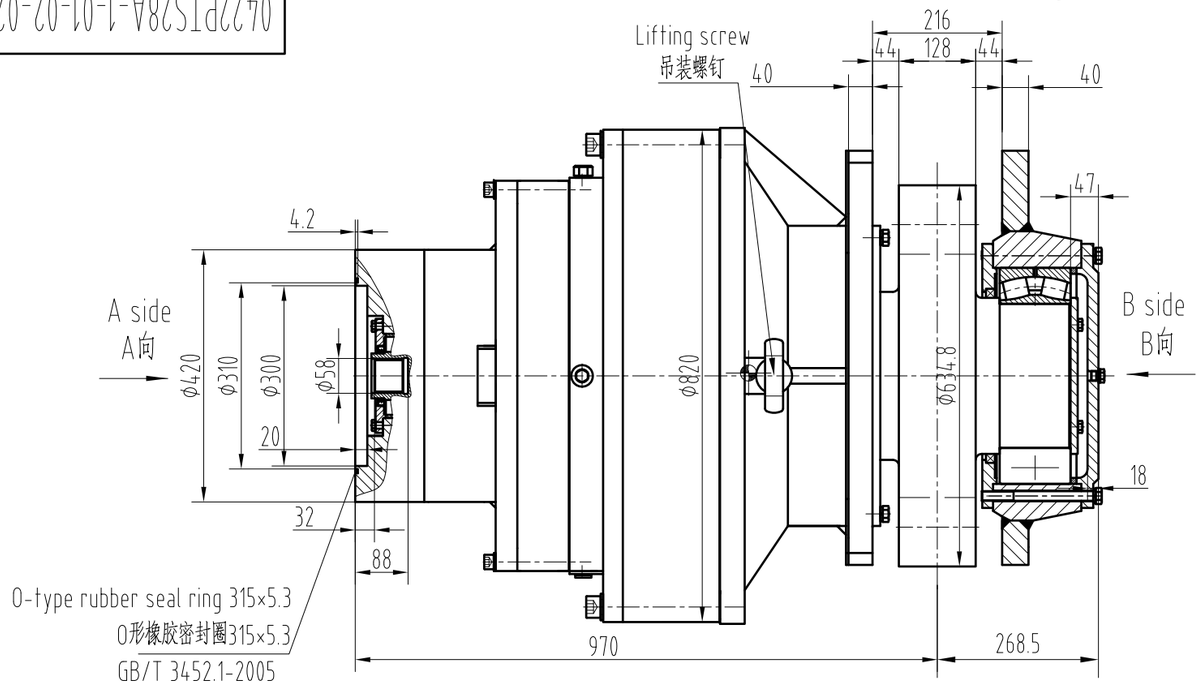

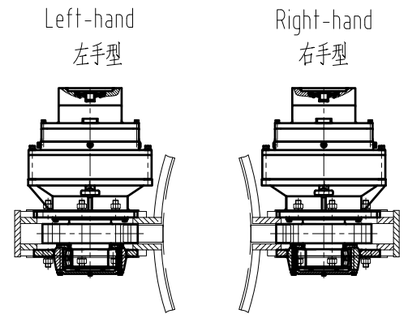

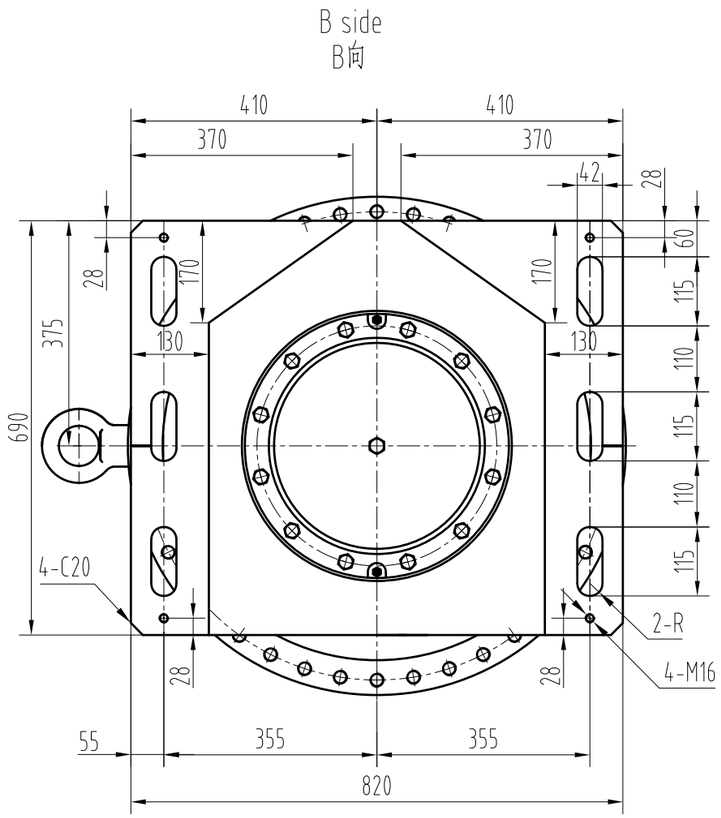

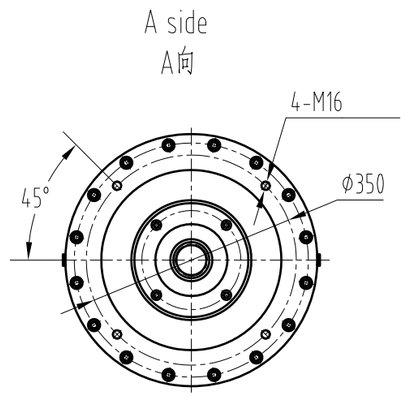

设计	
校对	
审核	
工艺	
标准	
批准	

标记	数量	修改单号	签字	日期

设计	
校核	
审核	
标检	
审定	
批准	

1320T电动齿轮齿条升降系统 1320T electric rack and pinion jacking system

齿轮箱 Gearbox

成品 Finished product

所属装配图号	0422PTS28A-1-01-02-00WG		
图号	0422PTS28A-1-01-02-02WG		
标记	版本	重量	比例
S		2300	1:10
共 1 页		第 1 页	

WMMP 武汉船用机械有限责任公司

0422PTS28A-1-01-03-00WG

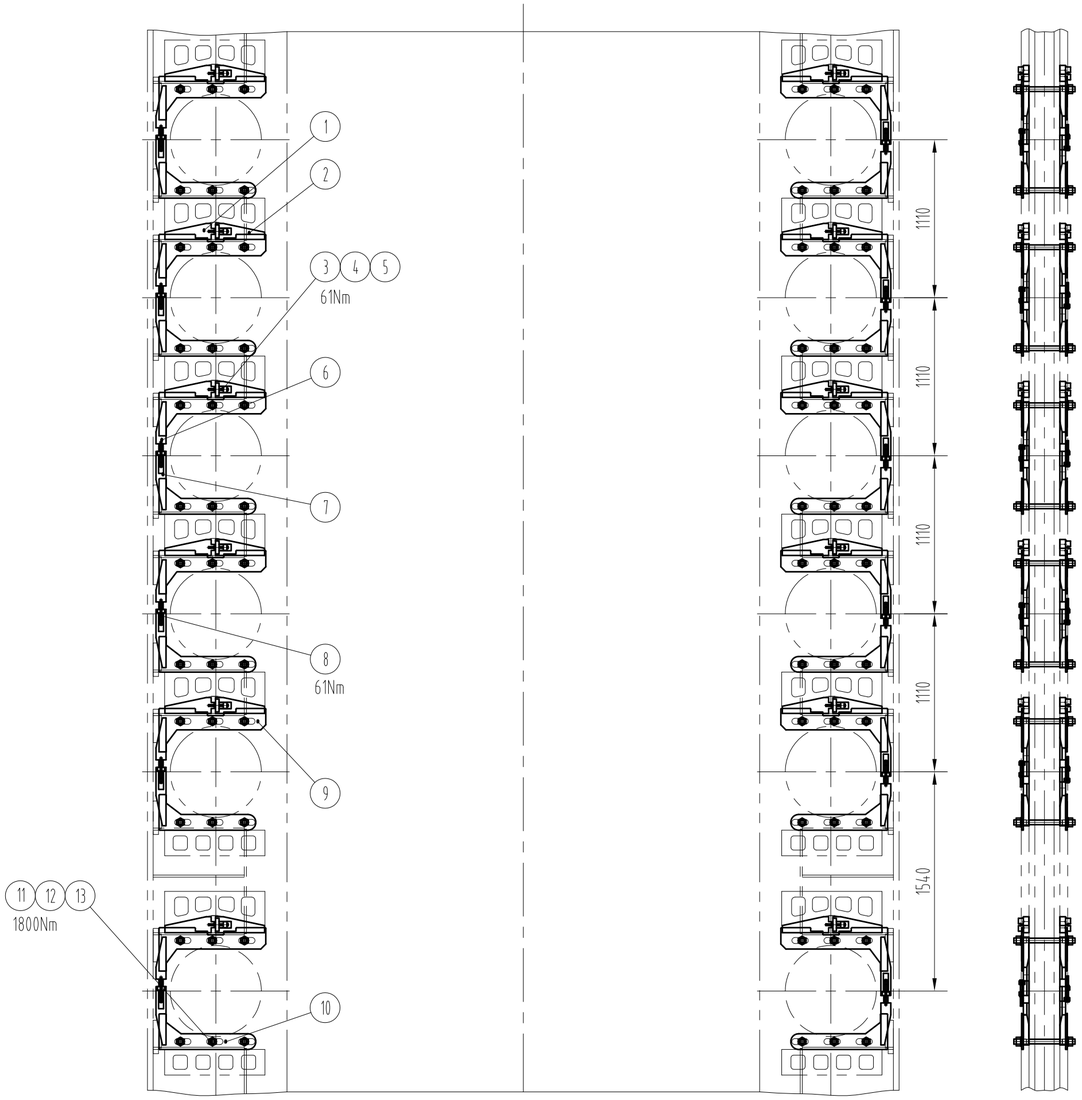

序号	代号	名称	数量	牌号 材料	标准号	单重 重量	总重 重量	备注
13	JB/ZQ 4080-2006	垫圈 washer 36	144	45#		0.13	18.72	
12	GB/T 6170-2015	螺母 nut M36	144	10	GB/T 3098.2-2015	0.4	57.6	
11	GB/T 901-1988	等长双头螺柱 equal length double stud M36×430	72	10.9	GB/T 3098.1-2010	3.3	237.6	
10	0422PTS27A-1-01-03-06	压板 pressing plate B	24	EH36	ABS	7.9	189.6	
9	0422PTS27A-1-01-03-05	压板 pressing plate A	24	EH36	ABS	10.2	244.8	
8	GB/T 5783-2016	螺栓 bolt M12×175	24	8.8	GB/T 3098.1-2010	0.017	0.408	
7	0422PTS27A-1-01-03-04	楔形块 wedge block Ⅳ	24	结构件 structual component		6.1	146.4	
6	0422PTS27A-1-01-03-03	楔形块 wedge block Ⅲ	24	结构件 structual component		6.7	160.8	
5	GB/T 97.1-2002	平垫圈 flat washer 12	96	200HV		0.001	0.096	
4	GB/T 6170-2015	锁紧螺母 Locking nut M12	48	8	GB/T 3098.2-2015	0.002	0.096	
3	GB/T 5783-2016	螺栓 bolt M12×130	24	8.8	GB/T 3098.1-2010	0.015	0.36	
2	0422PTS27A-1-01-03-02	楔形块 wedge block Ⅱ	24	结构件 structual component		8.4	201.6	
1	0422PTS27A-1-01-03-01	楔形块 wedge block Ⅰ	24	结构件 structual component		10.2	244.8	

设计	
校对	
审核	
工艺	
标准	
批准	

标记	重量	修改单号	签字	日期

设计	
校核	
审核	
标检	
审定	
批准	

1320T电动齿轮齿条升降系统 1320T electric rack and pinion jacking system

锁紧楔块组件 Subassembly of locking wedge

组件 component

所属装配图号	0422PTS28A-1-01-00WG
图号	0422PTS28A-1-01-03-00WG
标记	S
版本	
重量	1502.88
比例	1:30
共 1 页	第 1 页

武汉船用机械有限责任公司

0422PTS28A-1-01-04-00WG

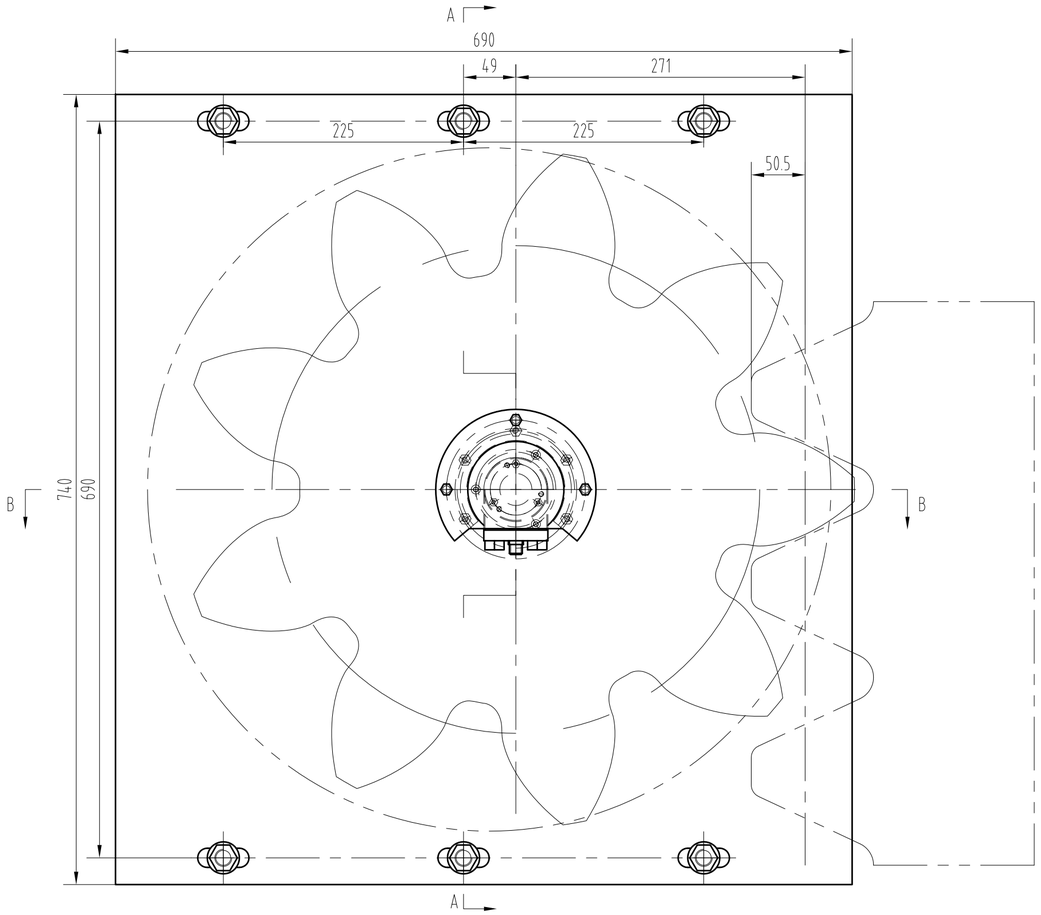

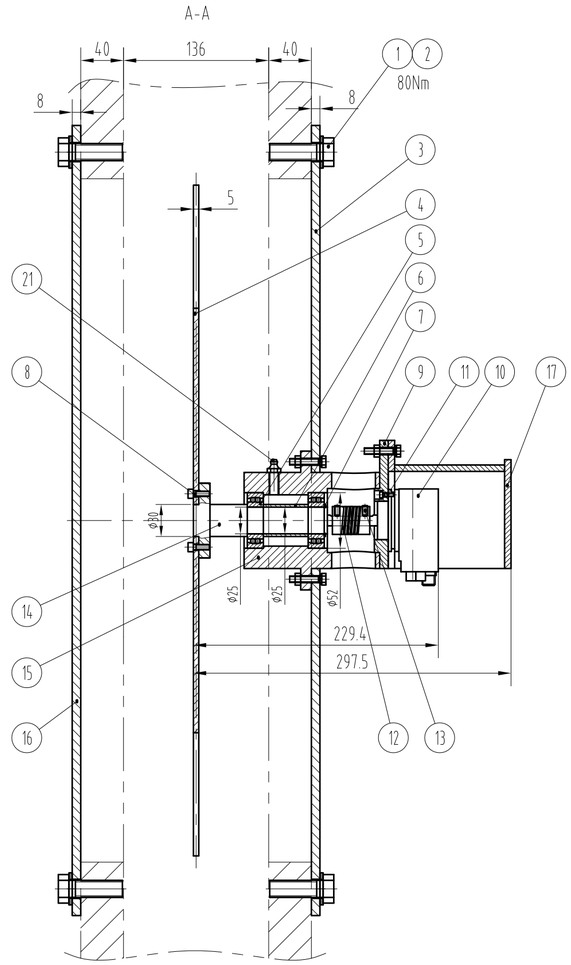

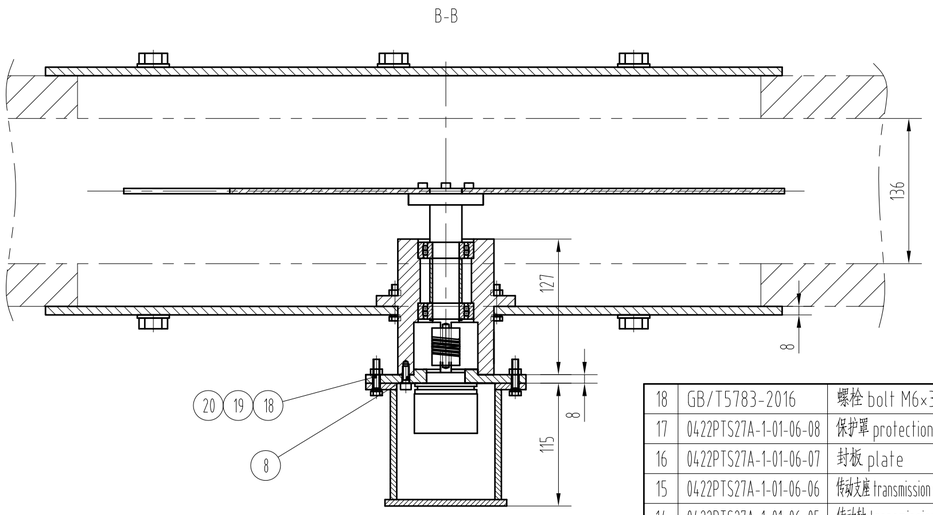

序号	代号	名称	数量	牌号	标准号	单重	总重	备注
				材料		重量		
21	JB/T 7940.1-1995	滑脂嘴 grease nipple M10×1	1	成品 finished product		0.01	0.01	
20	GB 93-1987	垫圈 washer 6	9	A4		0.01	0.09	
19	GB/T6170-2015	螺母 nut M6	9	A4-70		0.01	0.09	
18	GB/T5783-2016	螺栓 bolt M6×30	9	A4-70		0.02	0.18	
17	0422PTS27A-1-01-06-08	保护罩 protection cover	1	结构件 structural component		1.96	1.96	
16	0422PTS27A-1-01-06-07	封板 plate	1	Q235B	GB/T700-2006	32.1	32.1	
15	0422PTS27A-1-01-06-06	传动支座 transmission support	1	45#	GB/T699-2015	4.8	4.8	
14	0422PTS27A-1-01-06-05	传动轴 transmission shaft	1	45#	GB/T699-2015	0.85	0.85	
13	GB/T77-2007	紧定螺钉 set screw M4×10	2	A4-21H		0.01	0.02	
12		弹性联轴器 elastic coupling	1	成品 finished product		0.15	0.15	
11	GB/T70.1-2008	内六角螺钉 hex socket screw M3×10	3	A4-70		0.01	0.03	
10		绝对值编码器 absolute encoder	1	成品 finished product		0.2	0.2	
9	0422PTS28A-1-01-04-01	编码器安装盖 encoder mounting cover	1	45#	GB/T699-2015	0.8	0.8	
8	GB/T70.1-2008	内六角螺钉 hex socket screw M5×16	9	A4-70		0.02	0.18	
7	GB/T894.1-1986	弹性挡圈 elastic collar 25	1	65Mn		0.01	0.01	
6	0422PTS27A-1-01-06-03	轴套 shaft sleeve	1	45#	GB/T699-2015	0.07	0.07	
5	GB/T281-2013	调心球轴承 self-aligning ball bearing	2	1205型		0.15	0.3	
4	0422PTS27A-1-01-06-02	齿轮片 gear piece	1	Q235B	GB/T700-2006	8.5	8.5	
3	0422PTS27A-1-01-06-01	支架 bracket	1	Q235B	GB/T700-2006	31.5	31.5	
2	GB 97.1-2002	垫圈 washer 16	12	200HV		0.01	0.12	
1	GB/T5783-2016	螺栓 bolt M16×50	12	8.8级		0.18	2.16	

设计	
校对	
审核	
工艺	
标准	
批准	

标记	重量	修改单号	签字	日期
设计				
校核				
审核				
标检				
审定				
批准				

1320T电动齿条千斤顶系统 1320T electric rack and pinion jacking system

编码器组件 Encoder module

组件 component

所属装配图号	0422PTS28A-1-01-00WG
图号	0422PTS28A-1-01-04-00WG
标记 S	版本	重量 84.12	比例 1:4
共 1 页	第 1 页

武汉船用机械有限责任公司

0422PTS28B-1-00WG

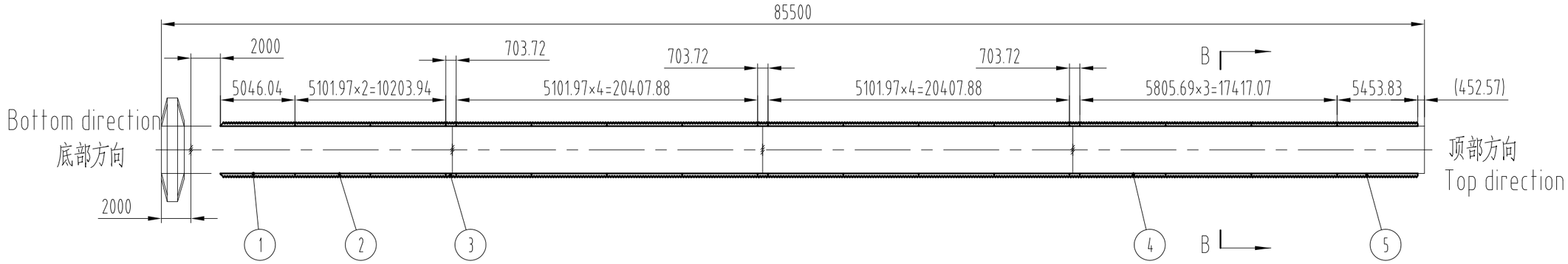

B-B

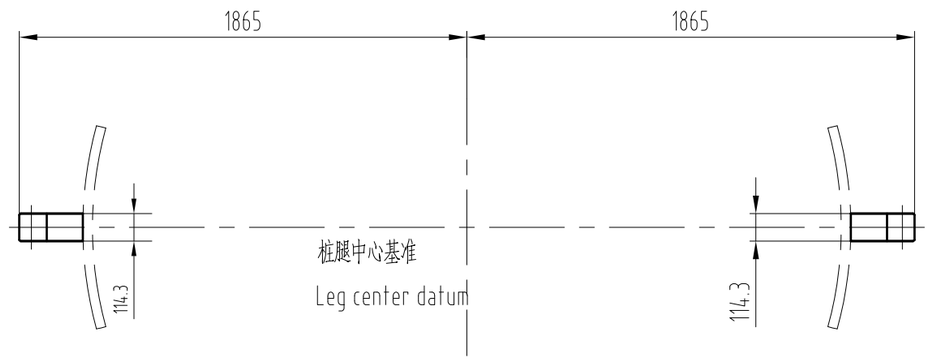

序号	代号	名称	数量	牌号 / 材料	标准号	单重 / 重量	总重	备注
5	0422PTS28B-1-05	齿条 rack 5	2	ASTM-A514GrQMod		1037.8	2075.6	
4	0422PTS28B-1-04	齿条 rack 4	6	ASTM-A514GrQMod		1104.7	6628.2	
3	0422PTS28B-1-03	齿条 rack 3	6	ASTM-A514GrQMod		133.9	803.4	
2	0422PTS28B-1-02	齿条 rack 2	20	ASTM-A514GrQMod		970.8	19416	
1	0422PTS28B-1-01	齿条 rack 1	2	ASTM-A514GrQMod		927.3	1854.6	

设计	
校对	
审核	
工艺	
标准	
批准	

标记	数量	修改单号	签字	日期

设计		
校核		
审核		
标检		
审定		
批准		

1320T电动齿轮齿条升降系统 1320T electric rack and pinion jacking system

所属装配图号

齿条布置图 Rack layout

图号 0422PTS28B-1-00WG

标记	版本	重量	比例
S		30777.8	1:300

共 1 页 第 1 页

焊接件 weld assembly

WMMP 武汉船用机械有限责任公司

0422PTS28A-1-02-02-00WG

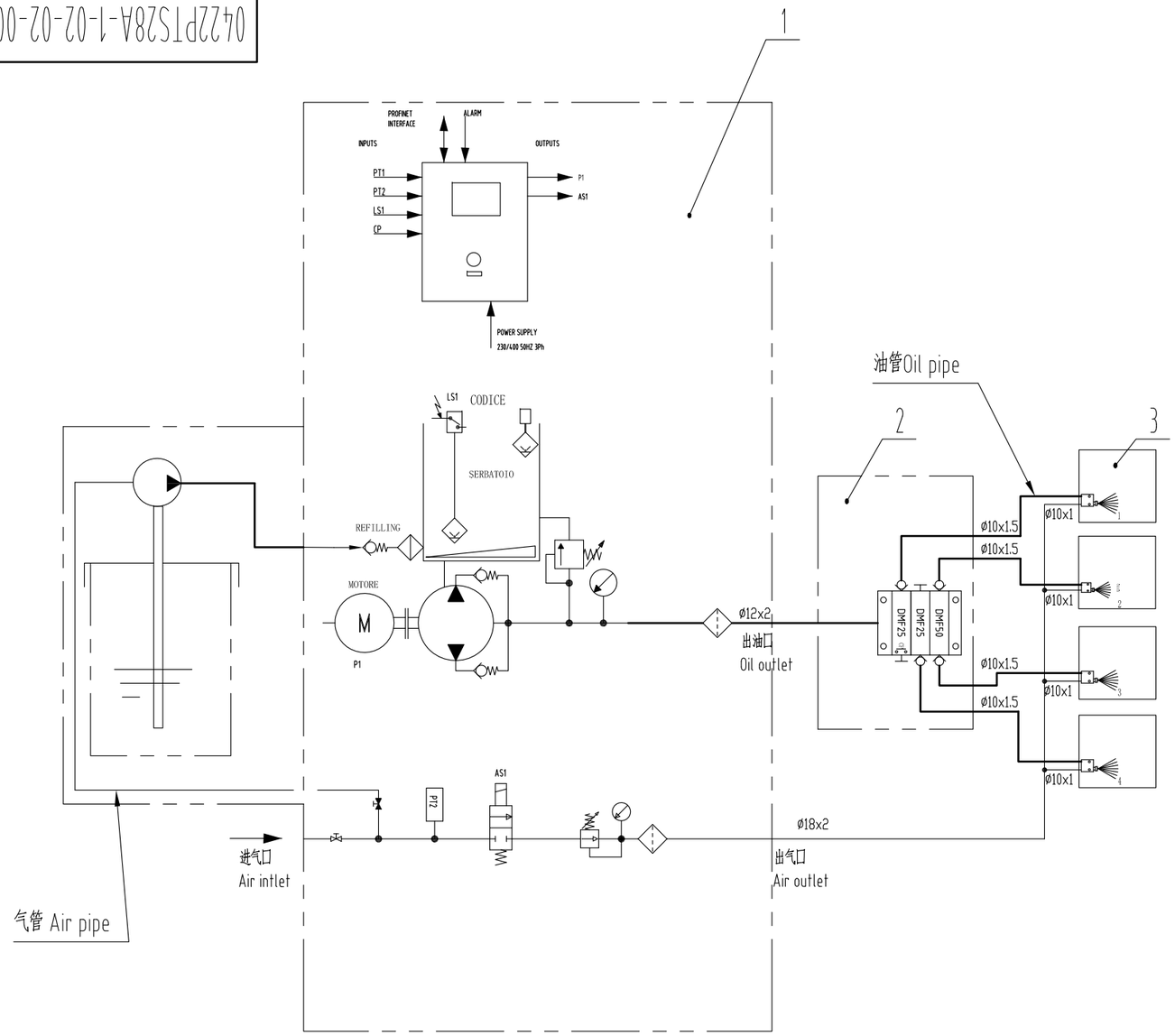

技术要求Technical requirement：

1.该原理图表示1个自动润滑泵站向1条桩腿提供润滑脂的工作原理，整个平台共4条桩腿，分别由4个自动润滑泵站提供润滑脂；

1. The schematic diagram shows the working principle of one automatic lubricating pump station providing grease to one leg. There are four legs in the whole platform, and the grease is provided by four automatic lubricating pump stations;

2.系统在组装前必须清洗干净所有的零部件；

2. All parts of the system must be cleaned before assembly;

3.气管、油管采用316L不锈钢钢管，安装过程确保管道清洁，无杂物。

3.The air pipe and oil pipe are made of 316L stainless steel pipe, the installation process needs toensure that the pepline is clean and free of debris

4.双点划线方框以内的设备及对外接头为WMMP供货，双点划线外的管路由船厂提供并安装，船厂安装油管、气管要零泄漏；

4.The equipment and external joints within the double-dot line box are supplied by WMMP, and the pipelines outside the double-dot line are provided and installed by the shipyard. The oil pipe and gas pipe installed by the shipyard should have zero leakagee.

5.润滑泵站、分配器、喷射阀安装螺钉由WMMP提供，由船厂安装固定，整个平台共一台气动注油泵；

5.The mounting screws of the lubrication pump station、distributor、the injection valve are supplied by WMMP and are fixed by shipyard. The whole platform has one refueling pump.

参数表Parameter		
设计压力/Design presure		250bar
电机功率 Power		1.5kW
流量 Flow		235ml/min
电源 Power source	主电路 Main circuit	AC380V 50Hz
	控制电路 Control circuit	DC24V
油箱容积 Tank volume		30L
要求气源压力 Air source pressure		0.5-0.8Mpa
要求气源流量 Air source flow		0.8cube/min
油管工作压力压力 Oil pipe work pressure		20Mpa
气管工作压力流量 Air pipe work pressure		1Mpa

序号	代号	名称	数量	牌号	标准号	单重	总重	备注
3	0422PTS28A-1-02-02-03WG	喷射阀 Injection valve	4					
2	0422PTS28A-1-02-02-02WG	分配器 Distributor	1					
1	0422PTS28A-1-02-02-01WG	润滑泵站 Lubrication pump station	1					

材料 重量

标记	数量	修改单号	签字	日期
设计		阮长松		2024.07.26
校核		刘利明		2024.07.26
审核		朱正都		2024.07.26
标检				
审定				
批准		方敏		2024.07.26

设计	
校对	
审核	
工艺	
标准	
批准	

1320T电动齿轮齿条升降系统

自动润滑系统 Lubrication System

组件 Assembly

所属装配图号

图号 0422PTS28A-1-02-02-00WG

标记	版本	重量	比例
S		219.2	1:8

共 1 页 第 1 页

武汉船用机械有限责任公司

0422PTS28A-1-02-02-01WG

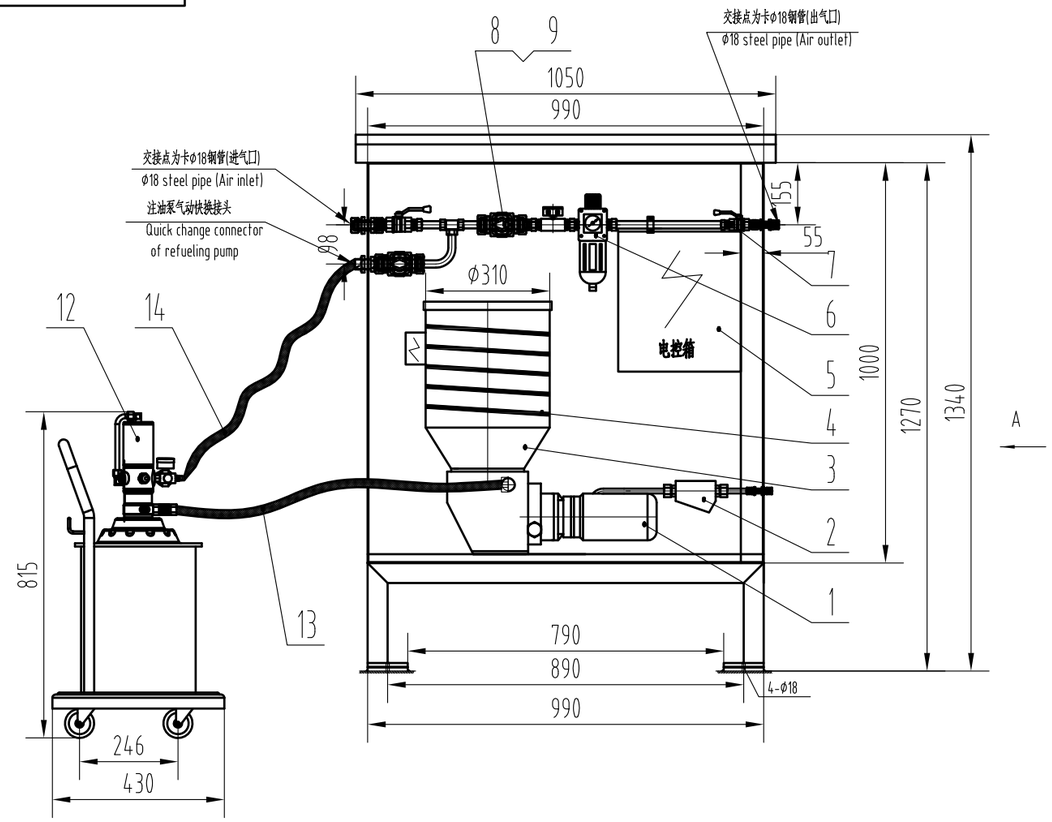

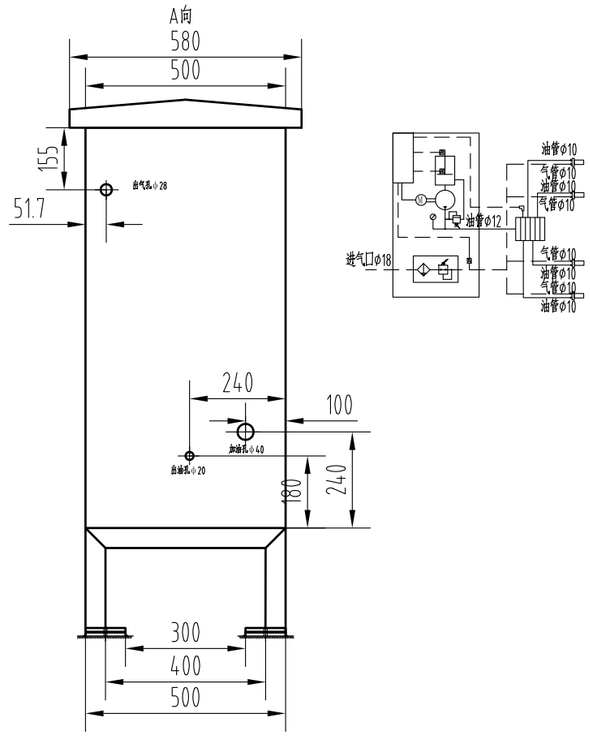

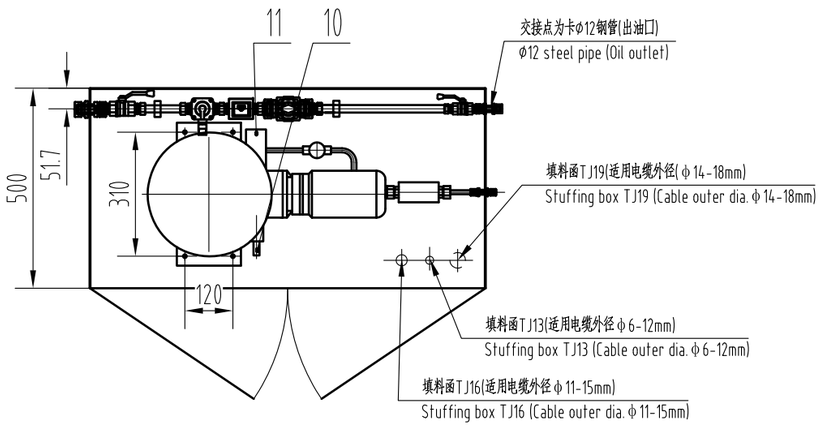

序号	代号	名称	数量	牌号	标准号	单重	总重	备注
				材料		重量		
9	0422PTS28A-1-02-02-01WG/09	压力开关 Pressure switch	1					
8	0422PTS28A-1-02-02-01WG/08	电磁阀 Electric Valve	1					
7	0422PTS28A-1-02-02-01WG/07	截止阀 Cut-off valve	2					
6	0422PTS28A-1-02-02-01WG/06	气动三联件 Pneumatic triple connector	1					
5	0422PTS28A-1-02-02-01WG/05	电控箱 Electric control box	1					
4	0422PTS28A-1-02-02-01WG/04	加热带 Heater	1					
3	0422PTS28A-1-02-02-01WG/03	储油桶 Oil tank	1					
2	0422PTS28A-1-02-02-01WG/02	过滤器 Filter	1					
1	0422PTS28A-1-02-02-01WG/01	电动润滑泵 Electric lubricationg pump	1					

序号	代号	名称	数量	牌号	标准号	单重	总重	备注
				材料		重量		
14	0422PTS28A-1-02-02-01WG/14	进气软管 Intake hose	1					
13	0422PTS28A-1-02-02-01WG/13	出油软管 Oil outlet hose	1					
12	0422PTS28A-1-02-02-01WG/12	注油泵 Refueling pump	1					
11	0422PTS28A-1-02-02-01WG/11	压力表 Pressure gauge	1					
10	0422PTS28A-1-02-02-01WG/10	溢流阀 Relief valve	1					

设计	
校对	
审核	
工艺	
标准	
批准	

标记	数量	修改单号	签字	日期
设计		阮长松		2024.07.26
校核		刘利明		2024.07.26
审核		朱正都		2024.07.26
标检				
审定				
批准		方敏		2024.07.26

1320T电动齿轮齿条升降系统

润滑泵站 Lubrication Pump Station

组件 Assembly

所属装配图号	0422PTS27A-1-02-02-00WG
图号	0422PTS28A-1-02-02-01WG
标记	S
版本	
重量	
比例	1:15
共 1 页	第 1 页

WMMP 武汉船用机械有限责任公司

0422PTS28A-1-02-02-02WG

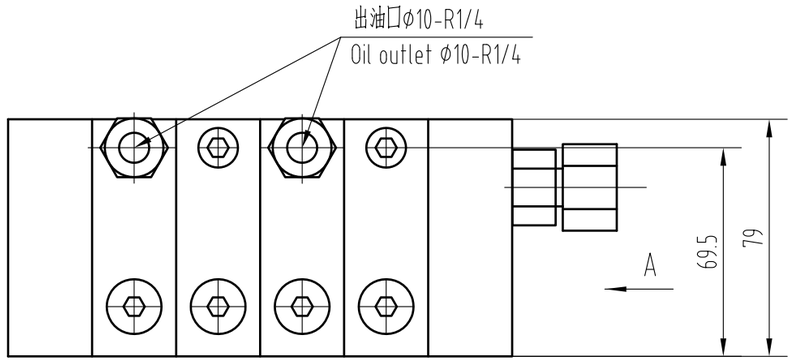

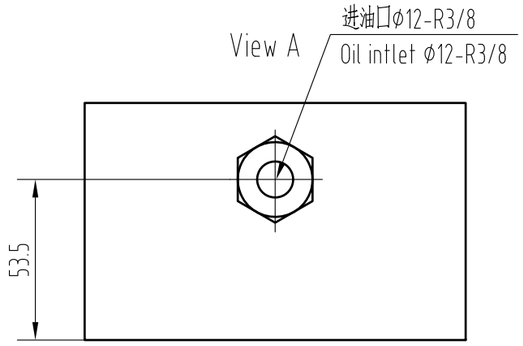

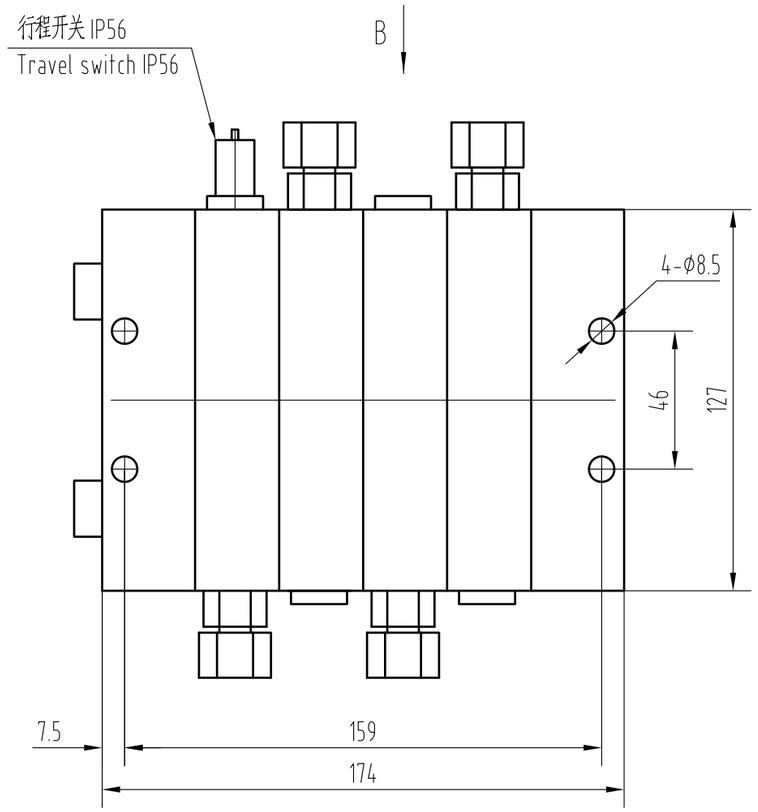

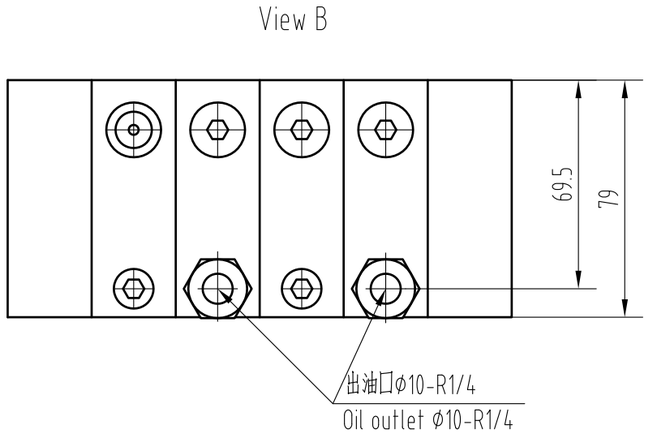

设计	
校对	
审核	
工艺	
标准	
批准	

标记	数量	修改单号	签字	日期
设计		阮长松		2024.07.26
校核		刘利明		2024.07.26
审核		朱正都		2024.07.26
标检				
审定				
批准		方敏		2024.07.26

1320T电动齿轮齿条升降系统

分配器 Distributor

组件 Assembly

所属装配图号	0422PTS28A-1-02-02-00WG
图号	0422PTS28A-1-02-02-02WG

标记	版本	重量	比例
S			1:2

共 1 页 第 1 页

武汉船用机械有限责任公司

0422PTS28A-1-02-02-03WG

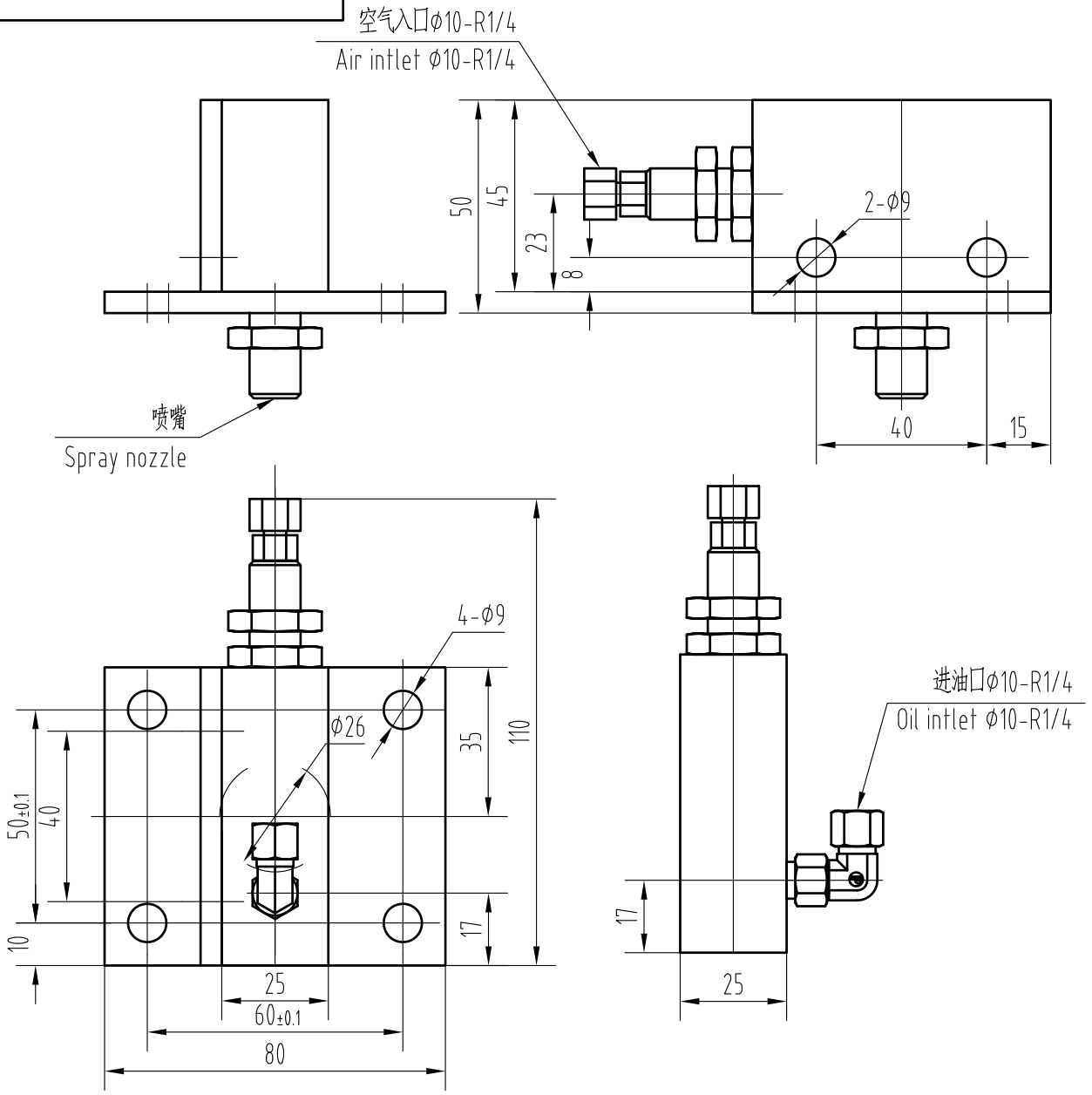

设计					1320T电动齿轮齿条升降系统	所属装配图号	0422PTS28A-1-02-02-00WG
校对							
审核					喷射阀 Injection Valve	图号	0422PTS28A-1-02-02-03WG
工艺	标记	数量	修改单号	签字	日期	标记 / 版本	重量 / 比例
标准	设计		阮长松		2024.07.26	S	1:1.5
批准	校核		刘利明		2024.07.26	共 1 页	第 1 页
	审核		朱正都		2024.07.26		
	标检						
	审定					组件 Assembly	武汉船用机械有限责任公司
	批准		方敏		2024.07.26		

船　东:
SHIP OWNER：
船　厂:
SHIPYARD：　青岛海西重机有限责任公司
船　号:
HULL NO：　HX2330/HX2331
船　型:
SHIPTYPE：　TYPE-3 Self-Elevating Unit
船　级:
RULE：　ABS
工程编号:
PROJECT NO：　平台升 28A-1 /2

升降系统

JACKING　SYSTEM

电 气 部 分

ELECTRIC　EQUIPMENT

完　工　图

APPROVAL DRAWING

型 号:
TYPE:

编　制 EDITED	陈志文	2024.6.7	资料编号 FILE NO	HJ/Y-PTS28A-1-03WG
校　核 CHECKED	江志刚	2024.6.7	共　424　页　第　1　页	
审　核 AUDITED	朱正都	2024.6.7	备　注 REMARK	
批　准 APPROVED	肖开明	2024.6.7	版本/Revision:	

武汉船用机械有限责任公司
WMMP WUHAN MARINE MACHINERY PLANT CO., LTD.

地址：中国湖北省武汉市青山区武东街九号
Add: NO. 9Wudong Street Qingshan Wuhan HuBei China
Fax:（027）68867461　Tel:（027）68867189
E-mail：whcj@wmmp.com.cn　Code：430084

完工图资料目录				
序号	文件/图纸名称	文件/图纸编号	页数	备注
1.	电气系统说明	HJ/Y-PTS28A-1-03-SM	6	
2.	电气系统	0422PTS28A-1-03-00WG	1	
3.	系统备件	0422PTS28A-1-03-07WG	1	
4.	电气线路图	0422PTS28A-1-03-08WG	8	
5.	电缆连接图	0422PTS28A-1-03-09WG	18	
6.	电气单线图	0422PTS28A-1-03-10WG	2	
7.	控制系统网络拓扑图	0422PTS28A-1-03-12WG	1	
8.	集中控制台	0422PTS28A-1-03-11100WG	2	
9.	集中控制台原理图	0422PTS28A-1-03-11101WG	8	
10.	机旁控制箱	0422PTS28A-1-03-11200WG	1	
11.	机旁控制箱原理图	0422PTS28A-1-03-11201WG	1	
12.	桩腿控制单元	0422PTS28A-1-03-12100WG	1	
13.	桩腿控制单元原理图	0422PTS28A-1-03-12101WG	18	
14.	桩腿接线盒	0422PTS28A-1-03-12200WG	1	
15.	电源箱	0422PTS28A-1-03-31100WG	1	
16.	电源箱原理图	0422PTS28A-1-03-31101WG	1	
17.	移相变压器	0422PTS28A-1-03-31200WG	4	
18.	变频驱动柜	0422PTS28A-1-03-31300WG	341	
19.	制动电阻柜	0422PTS28A-1-03-31400WG	1	
20.	电气系统安装说明书	HJ/Y-PTS28A-1-03-AZ-WG	6	

日期：2024-6-7
资料编号：HJ/Y-PTS28A-1-03-SM-WG

电气系统说明

整套控制系统基于 PLC 控制，用于电动齿轮齿条式升降系统。此平台各升降装置的升降单元均由变频器驱动。

本升降装置可在集中控制台和各桩腿机旁控制箱实现平台和桩腿的升、降动作。

1. 电气系统组成

序号	名称	数量	防护等级	安装位置	备注
1	中央控制台	1	IP23	驾控室	
2	桩腿控制单元	4	IP44	空调房	
3	机旁控制箱	4	IP56	甲板	
4	移相变压器	2	IP44	舱室	预冲磁 变压器由配电板 单独配置
5	变频驱动柜	2	IP22	空调房	
6	电源箱	2	IP44	舱室	
7	制动电阻柜	2	IP56	甲板面上	
8	绝对值编码器	8	IP56	安装架顶部	
9	桩腿接线盒	8	IP56	甲板面上	
10	超速开关	4	IP56	电机尾部	

2. 主要功能

2.1 中央控制台

- 紧急停止功能

按下紧急停止按钮后，除 PLC 电源外，所有动力、控制电源失电，电磁制动器抱闸。

➢ 升降功能

控制平台四条桩腿的升降控制。各桩腿既可以联动，也可以单动。

➢ 预压功能

通过对角线主动顶升平台来实现桩腿的主动预压。

➢ 单个升降单元载荷调整（R-torque）功能

通过调整升降单元的载荷，避免升降单元带载起动。

➢ 平台倾斜保护功能

电子测斜仪实时测量平台倾斜角度，在集中控制台面板上设有专门显示平台水平状态的显示屏。当平台倾斜角度超过预定范围后，进行自动报警并停止升、降工作，并提示人工干预调整。气泡式测斜仪安装在集中控制台上，作为电子水平仪故障后的备用。

➢ 倾斜保护忽略功能

在船体平台升降过程中，如需要进行超过规定倾斜角度的操作或电子测斜仪失灵时，可使用倾斜保护忽略功能，此时电子测斜仪不再参与控制。人工观察集中控制台上的气泡式测斜仪来判断平台倾斜状态。该功能使用时，设备处于一种不受保护状态，属于危险性质操作，操作时各桩腿侧、气泡式测斜仪处必须有专人定点观察状态，通讯系统必须保持畅通。

➢ 参数设置、显示功能

通过触摸屏提供最大负荷报警点、初始高度、自动升降高度等参数的设置功能；并显示、监控平台升降过程中的过程数据，包括平台升降过程中各小齿轮的载荷显示、桩腿升降高度显示，平台倾斜角度显示、桩腿速度显示、各电机转速和功率显示等。

➢ 重载问询功能

向配电板询问功率是否够升降系统动作。

➢ 常用控制显示，故障报警功能。

➢ 控制权限切换功能

中央控制台具有最高控制权限，当权限在中央控制台时，机旁不能操作，只能监控；当权限从中央控制台切换给桩边后，只有桩边按下确认按钮后，权限才切换给桩边，否则权限还是在中央控制台；另外，只有桩腿动作停止时，才可以切换权限，否则权限切换无效。

➢ 自动润滑控制功能

系统默认的是：当桩腿升降动作时，自动润滑会按设定频率自动喷润滑脂；另外，升降系统的触摸屏中还单独设置一个界面，操作人员可以手动控制各桩腿自动润滑的起动和停止。

2.2 机旁控制箱

- 单桩升降控制

通过按钮来实现单桩的升降动作和停止；

- 显示功能

通过触摸屏显示各动作状态、桩腿位移和平台水平姿态；

- 紧急停机功能

通过急停按钮实现，功能与中央控制台一致。

- 报警功能

通过指示灯、蜂鸣器等实现故障报警；

- 电磁制动器控制功能

通过选择开关和按钮实现桩腿各电磁制动器的开闭功能；

2.3 安全保护

本项目的安保点如下表所示：

序号	报警点	报警措施		安保措施			备注
		独立报警指示灯	触摸屏	只报警	停升降动作	切动力电源	
1	紧急停机	●	●		●	●	
2	平台倾斜预警		●	●			0.5°
3	平台倾斜超限		●		●		0.8°
4	电子水平仪故障		●		●		
5	变频器故障		●		●		包括过载、过压、断相、过热等
6	电机过热		●		●		每台电机单独报警
7	电机过流		●		●		每台电机单独报警
8	电磁制动器限位磨损		●	●			在电机启动前若数量超过 3 个，则不允许启动

9	电磁制动器失效		●		●		每桩制动器综合判断
10	电磁制动器线圈高温		●	●			
11	小齿轮负荷不平衡预报警		●	●			
12	小齿轮负荷不平衡停机		●		●		
13	单个小齿轮负荷过载		●		●		每小齿轮单独报警
14	桩腿负荷过载		●		●		
15	桩腿上限位		●		●		平台不能上升
16	桩腿下限位		●		●		平台不能下降
17	电机超速		●		●		电机速度超过10%
18	润滑系统综合故障		●	●			
19	润滑系统低液位		●	●			
20	网络通讯故障		●		●		
21	CPU 故障		●		●		
22	升降单元速度异常		●		●		
23	移相变压器绕组高温报警		●	●			
24	移相变压器绕组高温停机		●		●		
25	刹车电阻高温报警		●	●			
26	刹车电阻高温停机		●		●		

3. 接口

3.1 接口说明

模拟量信号：

- WMMP 系统接收的模拟量信号，由 WMMP 系统负责隔离接收。
- WMMP 系统输出的模拟量信号，由接收系统负责隔离接收。

开关量信号：

- WMMP 系统接收的开关量信号要求是无源触点信号，触点容量 250VAC，2A。
- WMMP 系统输出的开关量信号为无源触点信号，触点容量 250VAC，2A。

3.2 电动齿轮齿条式升降系统与平台配电板接口

电动齿轮齿条式升降系统与平台配电板接口（单桩按以下配置，信号类型为保持信号）

- 一路无源触点：触点闭合 =升降系统重载问询
- 一路无源触点：触点闭合 =升降系统运行

平台配电板输出至电动齿轮齿条式升降系统（单桩按以下配置，信号类型为保持信号）

- 一路无源触点：触点闭合 = 升降系统允许起动
- 一路无源触点（配电板至升降系统）：触点闭合 = 配电板断路器合闸；

具体时序图如下所示：

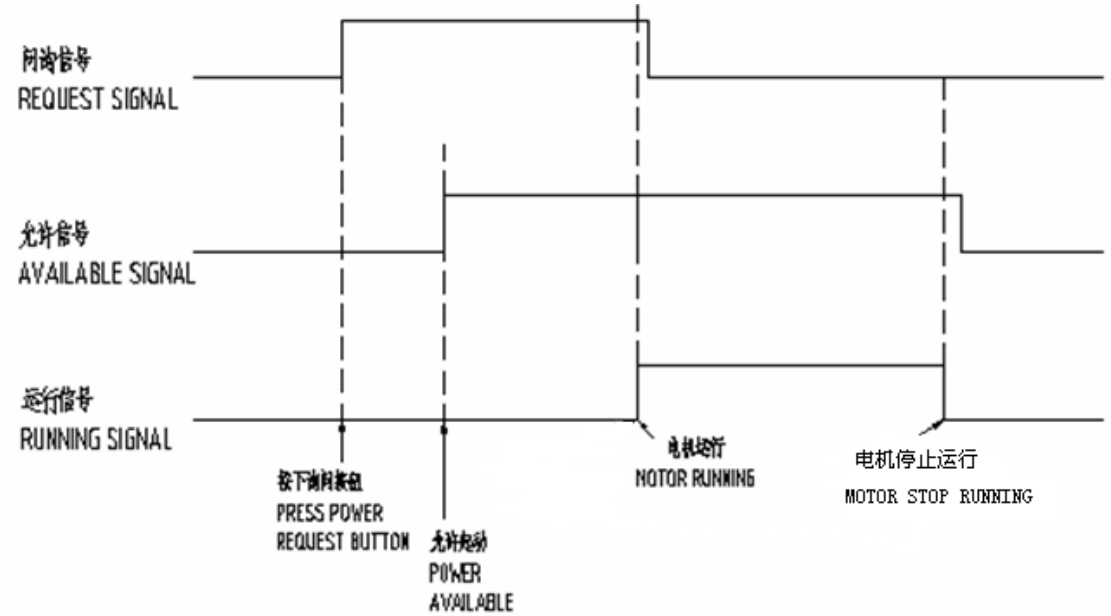

3.3 电动齿轮齿条式升降系统与平台其它设备接口

1、升降系统与船舶自动监控系统接口

每桩腿提供一路报警信号给 AMS 系统，无源触点，触点断开 = 相应桩腿综合故障报警

2、升降系统与 DP 系统接口

每桩腿提供一路 4~20mA 的桩腿长度信号给 DP 系统；

每桩腿提供一路触底信号给 DP 系统，无源触点，触点闭合=桩腿触底；

3.4 电源接口

升降系统的电源由平台配电板提供，各移相变压器的预充磁控制由配电板负责，升降系统提供移相变压器，具体电源接口如下：

<table>
<tr><th>序号</th><th colspan="2">名称</th><th colspan="2">接口</th><th>备注</th></tr>
<tr><td>1</td><td colspan="2">主变压器电源</td><td>AC690V 50HZ</td><td>2 路</td><td>每路功率≤530KW</td></tr>
<tr><td rowspan="3">3</td><td rowspan="3">电源箱</td><td>润滑系统电源</td><td rowspan="3">AC400V 50HZ</td><td rowspan="3">2 路</td><td rowspan="3">每路功率≤15KW</td></tr>
<tr><td>移相变压器冷却风机电源</td></tr>
<tr><td>制动电阻冷却风机电源</td></tr>
<tr><td rowspan="2">4</td><td colspan="2" rowspan="2">控制电源</td><td rowspan="2">AC220V 50HZ</td><td>4 路</td><td>桩腿
每路功率≤3KW</td></tr>
<tr><td>1 路</td><td>中央控制台
每路功率≤1KW</td></tr>
</table>

3.5 电缆接口

电气线路图(0422PTS28A-1-03-08)中带编号的电缆均由船厂提供和安装，且线路图中的电缆规格供船厂参考，船厂在具体选择电缆时应考虑填料函的卡口范围（各填料函卡口范围在船厂提供电缆外径清单后在工作图中明确）。

注：系统电缆的具体接线请参见“电缆连接图，图号：0422PTS28A-1-03-09”

3.5 移相变压器和预充磁变压器说明

预充磁变压器放置在移相变压器外部，其供电和控制由配电板完成，预充磁完成后才允许给移相变压器送电。为避免主变压器正常工作后长期对预充磁变压器副边送电，预充磁变压器副边至主变压器副边线圈的线不能直接在变压器内接好，需要将预充磁变压器副边引至配电板控制回路。

0422PTS28A-1-03-00WG

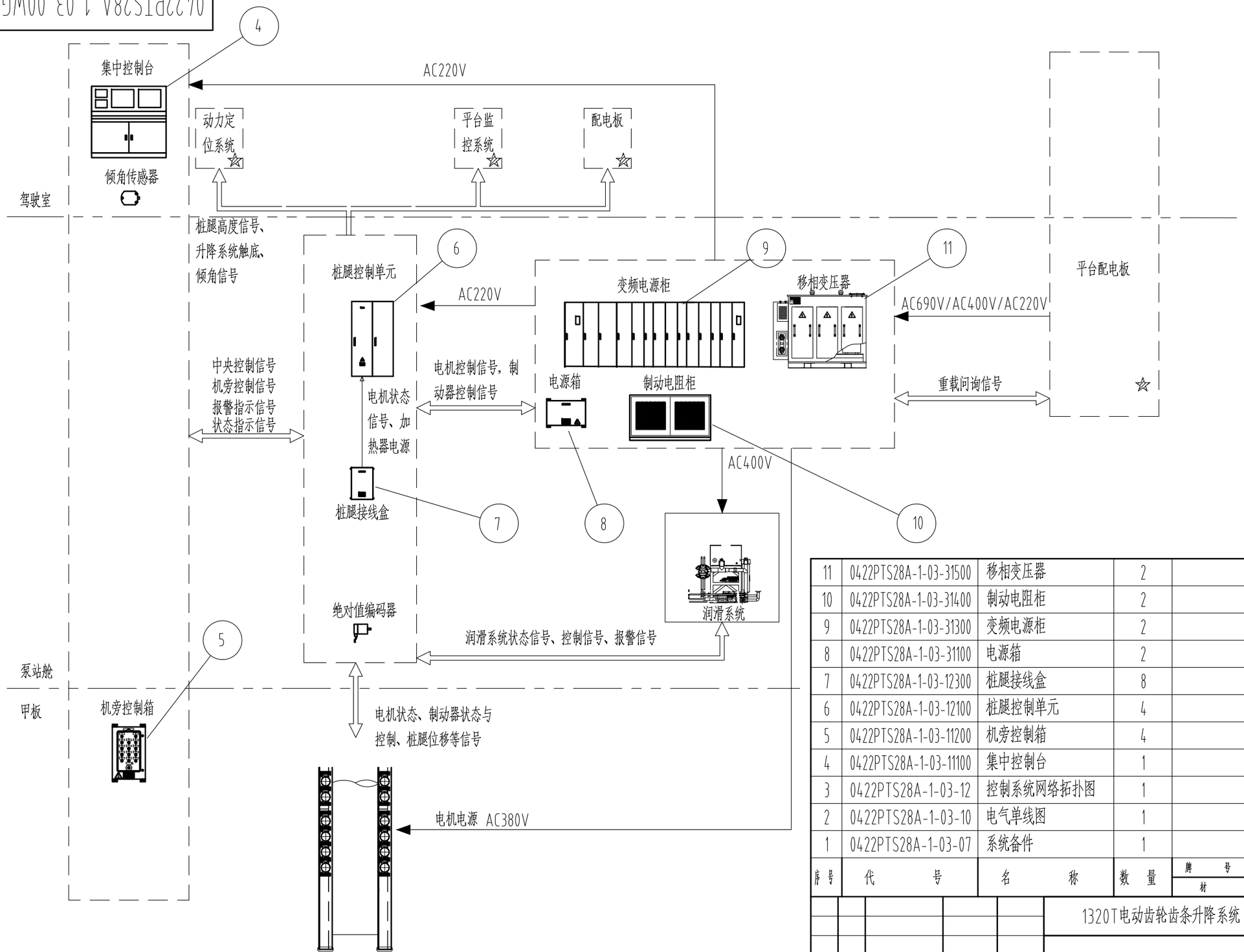

主要技术参数	
船级社	ABS
电源	主电源：AC690V,3P,50HZ
	电源箱电源：AC400V,3P,50HZ
	控制电源：AC220V,1P,50HZ
环境温度	0℃-50℃
供电方式	平台配电
驱动方式	变频驱动
电机数量	12台/桩，共48台
电机功率	22KW/台（46A）
控制系统	分布式控制
防爆等级	无
防护等级	室外：IP56
	室内：IP23
通讯	PROFINET/IO

序号	代号	名称	数量	牌号 / 材料	标准号	单重 / 重量	总重	备注
11	0422PTS28A-1-03-31500	移相变压器	2					
10	0422PTS28A-1-03-31400	制动电阻柜	2					
9	0422PTS28A-1-03-31300	变频电源柜	2					
8	0422PTS28A-1-03-31100	电源箱	2					
7	0422PTS28A-1-03-12300	桩腿接线盒	8					
6	0422PTS28A-1-03-12100	桩腿控制单元	4					
5	0422PTS28A-1-03-11200	机旁控制箱	4					
4	0422PTS28A-1-03-11100	集中控制台	1					
3	0422PTS28A-1-03-12	控制系统网络拓扑图	1					
2	0422PTS28A-1-03-10	电气单线图	1					
1	0422PTS28A-1-03-07	系统备件	1					

注：带☆部件由平台提供，不属于本系统。

◀—— 动力信号

⟺ 控制信号

技术要求：

电气系统为整个升降系统配置一套，本图仅为其中一条桩腿的方案图，另三条桩腿的方案相同。

设计	
校对	
审核	
工艺	
标准	
批准	

标记	数量	修改单号	签字	日期
设计				
校核				
审核				
标检				
审定				
批准				

1320T电动齿轮齿条升降系统

电气系统

总成

所属装配图号	0422PTS28A-1-00WG
图号	0422PTS28A-1-03-00WG
标记 S	版本	重量 9877.091	比例 1:15
共 1 页	第 1 页

武汉船用机械有限责任公司

0422PTS28A-1-03-07WG

技术要求：

本清单为整船定额。

序号	代号	名称	数量	牌号	标准号	单重	总重	备注
				材料		重量		
23	FW2-0168	4#工具备件箱	1			10	10	
22	LW39-16C-4A0-1x7J/4P-G(0,1,2,3,4,5,6,7)	7档选择开关	1			0.05	0.05	备件
21	CB1-620B	蜂鸣器	1			0.02	0.02	备件
20	GR-4C-AC230V	中间继电器线圈	2			0.03	0.06	备件
19	CR-2C-DC24V	中间继电器线圈	10			0.03	0.3	备件
18	CAD50M7C	中间继电器	2			0.2	0.4	备件
17	MCB-01	常闭触点	4			0.02	0.08	备件
16	MCB-10	常开触点	4			0.02	0.08	备件
15	MCBH-00	基座	4			0.02	0.08	备件
14	MLBL-01G	绿色LED集成灯座	2			0.02	0.04	备件
13	MLBL-01L	蓝色LED集成灯座	2			0.02	0.04	备件
12	MLBL-01Y	黄色LED集成灯座	2			0.02	0.04	备件
11	CL2-502C	白色指示灯	1			0.02	0.02	备件
10	CL2-502R	红色指示灯	1			0.02	0.02	备件
9	M2SSK1-301	两档钥匙开关头	1			0.02	0.02	备件
8	M2SS2-31L	两档选择开关头	1			0.03	0.03	备件
7	M2SS2-30B	两档选择开关头	1			0.03	0.03	备件
6	M3SS1-30B	三档选择开关头	1			0.03	0.03	备件
5	MP1-31Y	黄色带灯按钮头	2			0.03	0.06	备件
4	MP1-31L	蓝色带灯按钮头	2			0.03	0.06	备件
3	MP1-31G	绿色带灯按钮头	2			0.03	0.06	备件
2	MP1-30Y	按钮头	2			0.02	0.04	备件
1	MP1-30R	按钮头	2			0.02	0.04	备件

设计				
校对				
审核				
工艺				
标准				
批准				

标记	数量	修改单号	签字	日期

设计		
校核		
审核		
标检		
审定		
批准		

1320T电动齿轮齿条升降系统

系统备件

所属装配图号	0422PTS28A-1-03-00WG
图号	0422PTS28A-1-03-07WG

标记	版本	重量	比例
S		11.6	1:1

共 1 页 第 1 页

WMMP 武汉船用机械有限责任公司

0422PTS28A-1-03-08WG

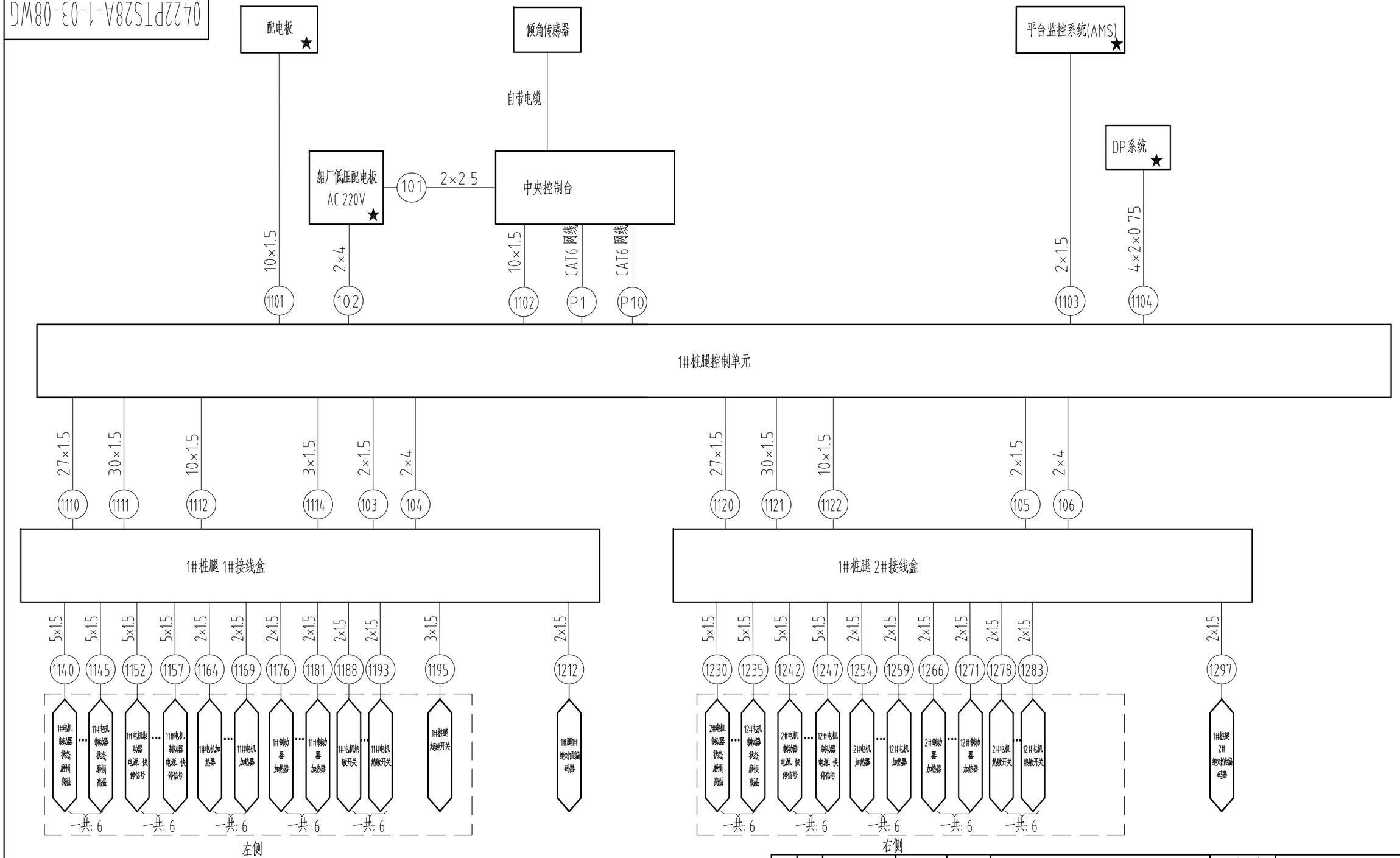

设计	
校对	
审核	
工艺	
标准	
批准	

虚线框内为电机接线

★=不由WMMP提供。

NOTE:带编号的电缆不由WMMP提供,电缆的型号和数量仅供参考。

标记	数量	修改单号	签字	日期

设计	
校核	
审核	
标检	
审定	
批准	

1320T电动齿轮齿条升降系统

电气线路图

所属装配图号	0422PTS28A-1-03-00WG
图号	0422PTS28A-1-03-08WG

标记	版本	重量	比例
S			1:1

共 8 页 第 1 页

武汉船用机械有限责任公司

0422PTS28A-1-03-08WG

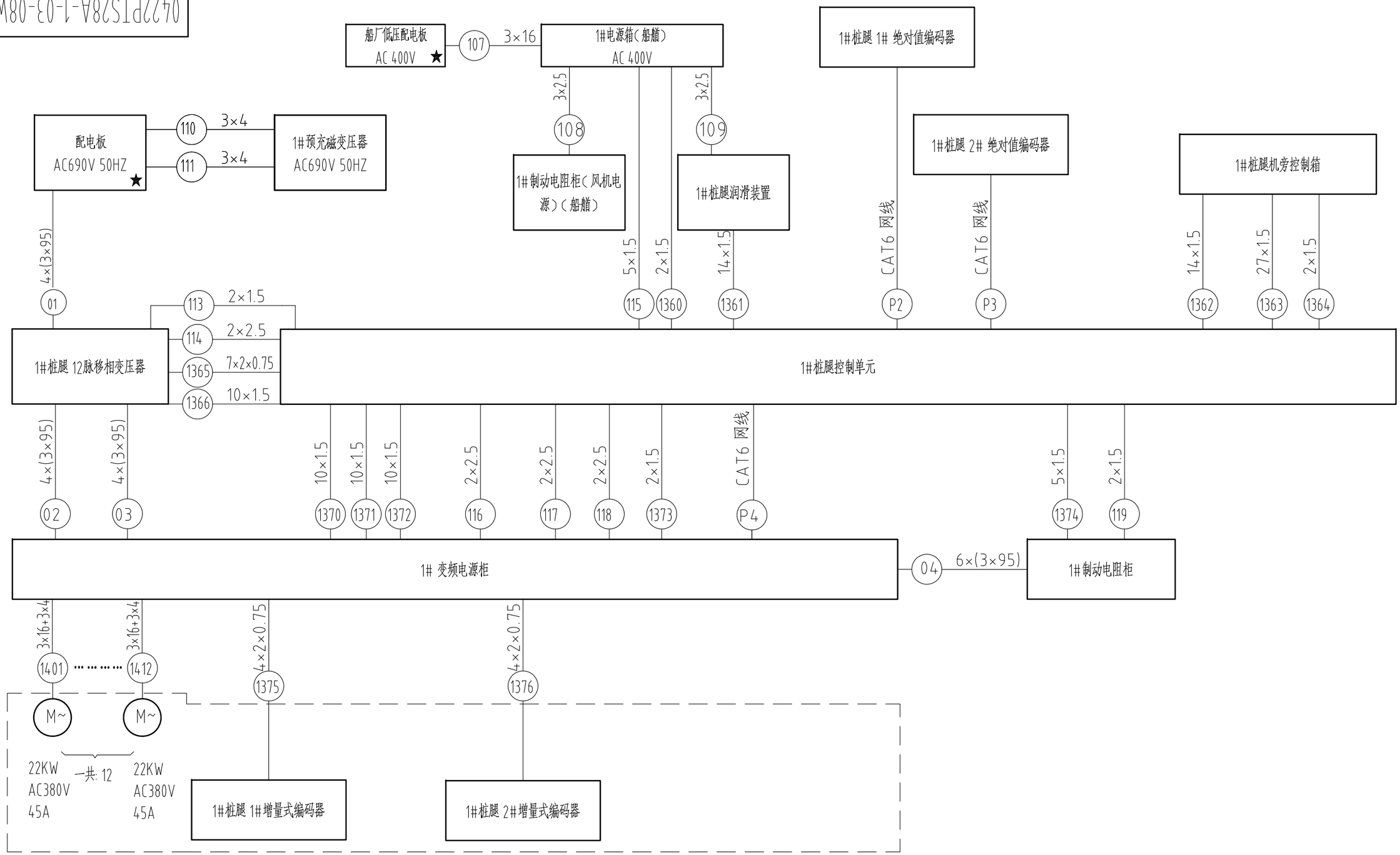

虚线框内为电机接线

NOTE:带编号的电缆不由WMMP提供,电缆的型号和数量仅供参考。

★=不由WMMP提供。

设计	
校对	
审核	
工艺	
标准	
批准	

标记	数量	修改单号	签字	日期

设计	
校核	
审核	
标检	
审定	
批准	

1320T电动齿轮齿条升降系统

电气线路图

所属装配图号	0422PTS28A-1-03-00WG
图号	0422PTS28A-1-03-08WG

标记	版本	重量	比例
S			1:1

共 8 页 第 2 页

武汉船用机械有限责任公司

0422PTS28A-1-03-08WG

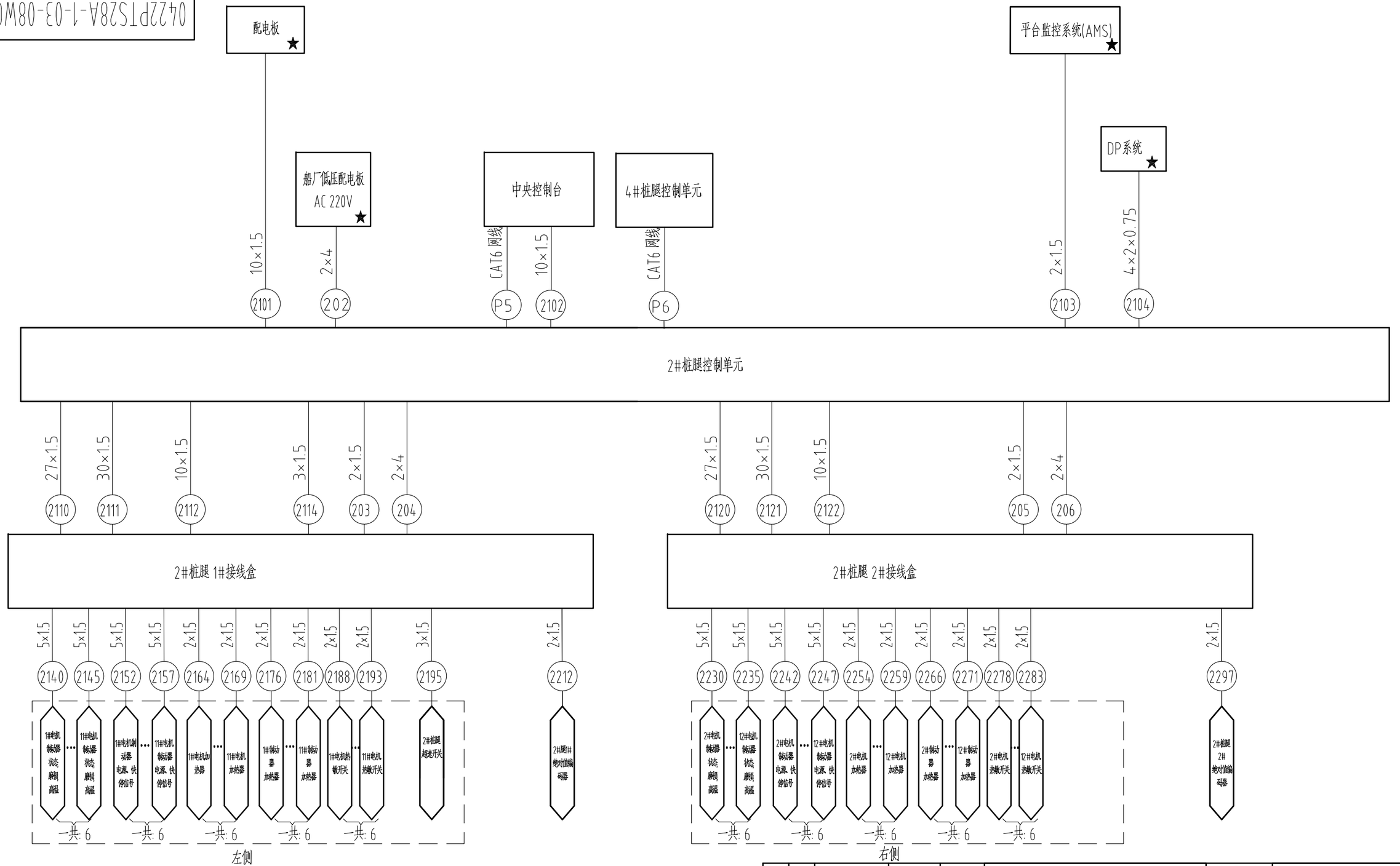

虚线框内为电机接线

★=不由WMMP提供。

NOTE:带编号的电缆不由WMMP提供.电缆的型号和数量仅供参考。

设计	
校对	
审核	
工艺	
标准	
批准	

标记	数量	修改单号	签字	日期

设计	
校核	
审核	
标检	
审定	
批准	

1320T电动齿轮齿条升降系统

电气线路图

所属装配图号	0422PTS28A-1-03-00WG
图号	0422PTS28A-1-03-08WG

标记	版本	重量	比例
S			1:1

共 8 页 第 3 页

武汉船用机械有限责任公司

0422PTS28A-1-03-08WG

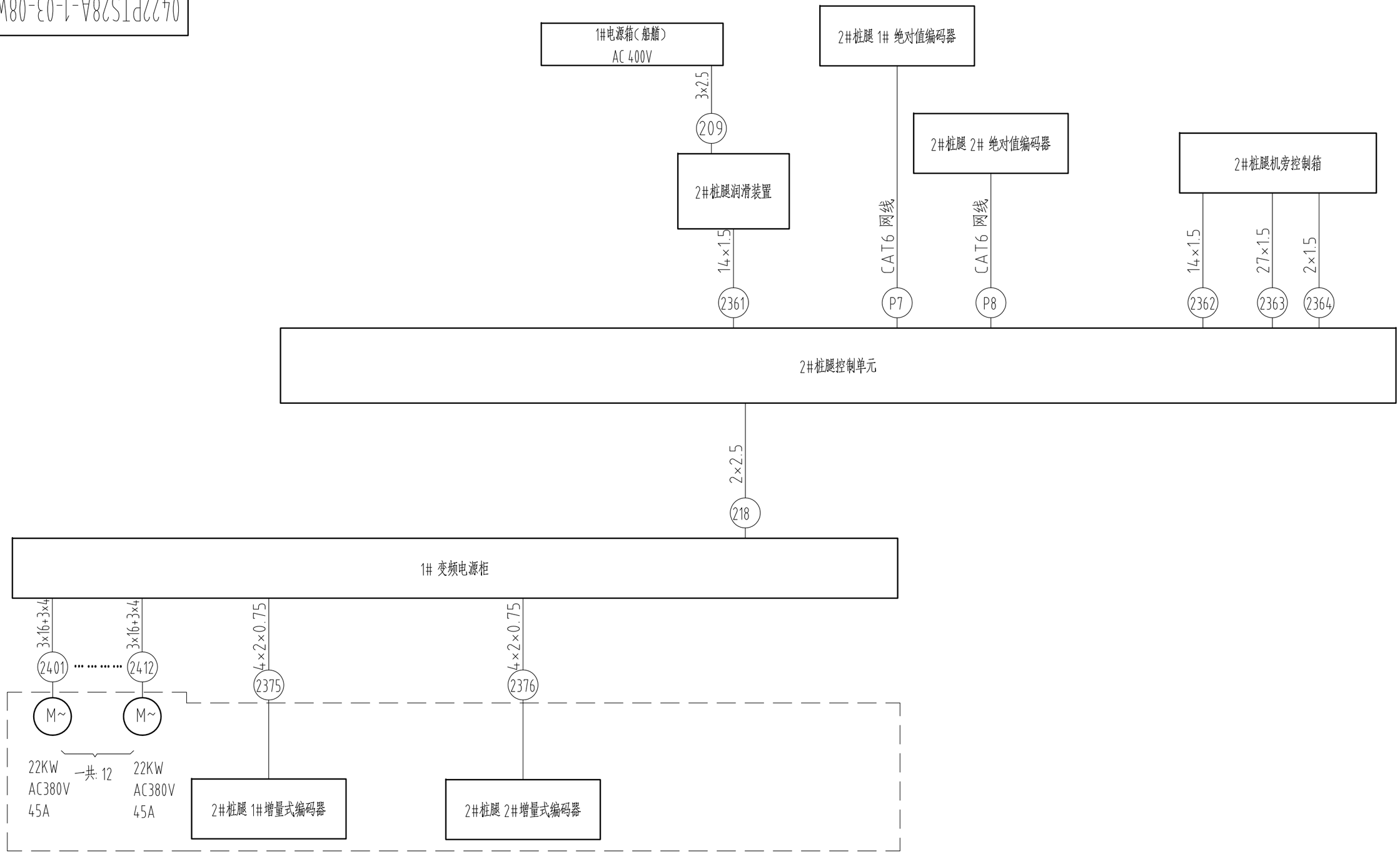

虚线框内为电机接线

NOTE:带编号的电缆不由WMMP提供.电缆的型号和数量仅供参考。

★=不由WMMP提供。

设计	
校对	
审核	
工艺	
标准	
批准	

标记	数量	修改单号	签字	日期

设计	
校核	
审核	
标检	
审定	
批准	

1320T电动齿轮齿条升降系统

电气线路图

所属装配图号	0422PTS28A-1-03-00WG
图号	0422PTS28A-1-03-08WG

标记	版本	重量	比例
S			1:1

共 8 页 第 4 页

武汉船用机械有限责任公司

0422PTS28A-1-03-08WG

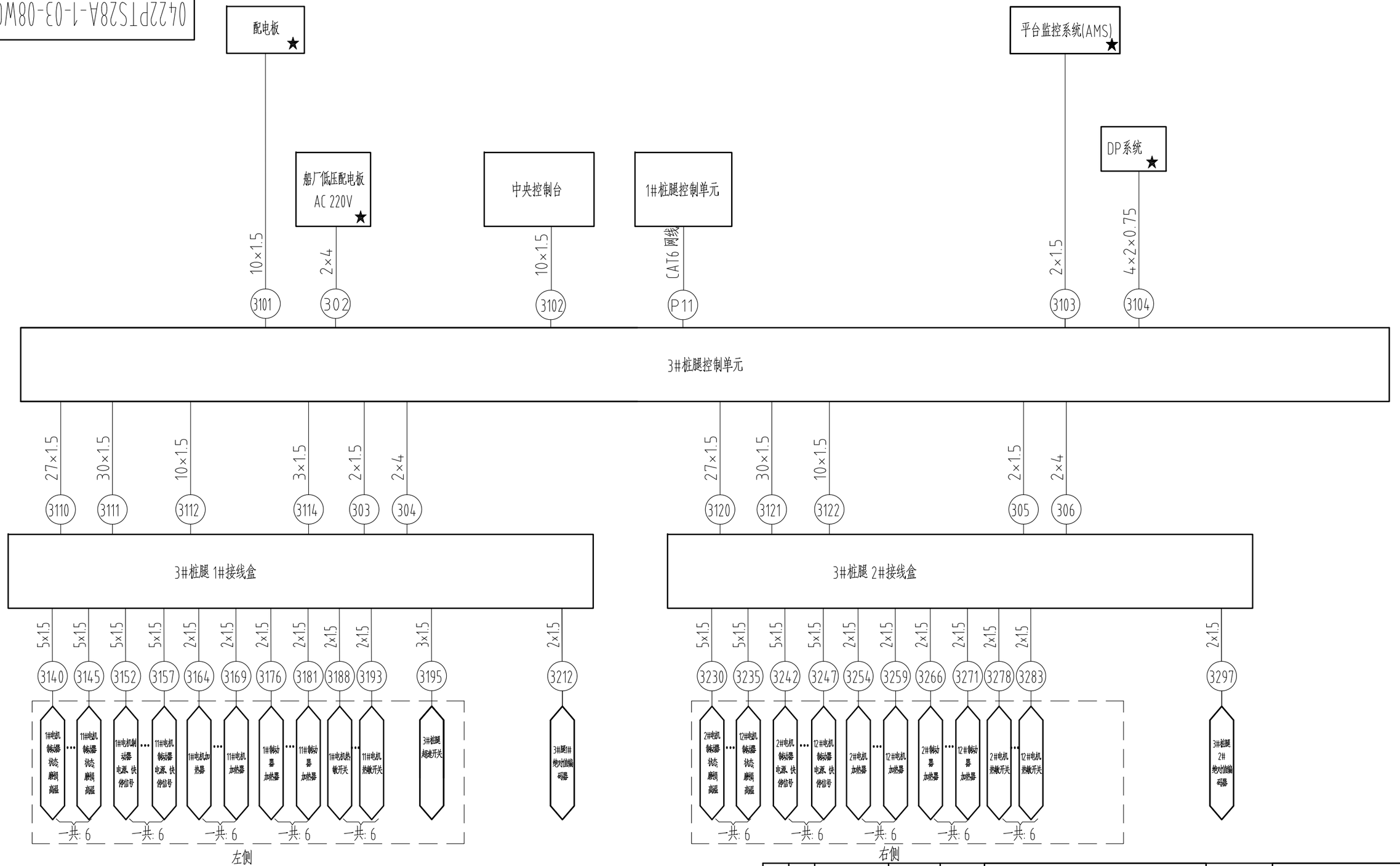

虚线框内为电机接线

★=不由WMMP提供。

NOTE:带编号的电缆不由WMMP提供.电缆的型号和数量仅供参考。

设计	
校对	
审核	
工艺	
标准	
批准	

标记	数量	修改单号	签字	日期

设计	
校核	
审核	
标检	
审定	
批准	

1320T电动齿轮齿条升降系统

电气线路图

所属装配图号	0422PTS28A-1-03-00WG
图号	0422PTS28A-1-03-08WG

标记	版本	重量	比例
S			1:1

共 8 页 第 5 页

武汉船用机械有限责任公司

0422PTS28A-1-03-08WG

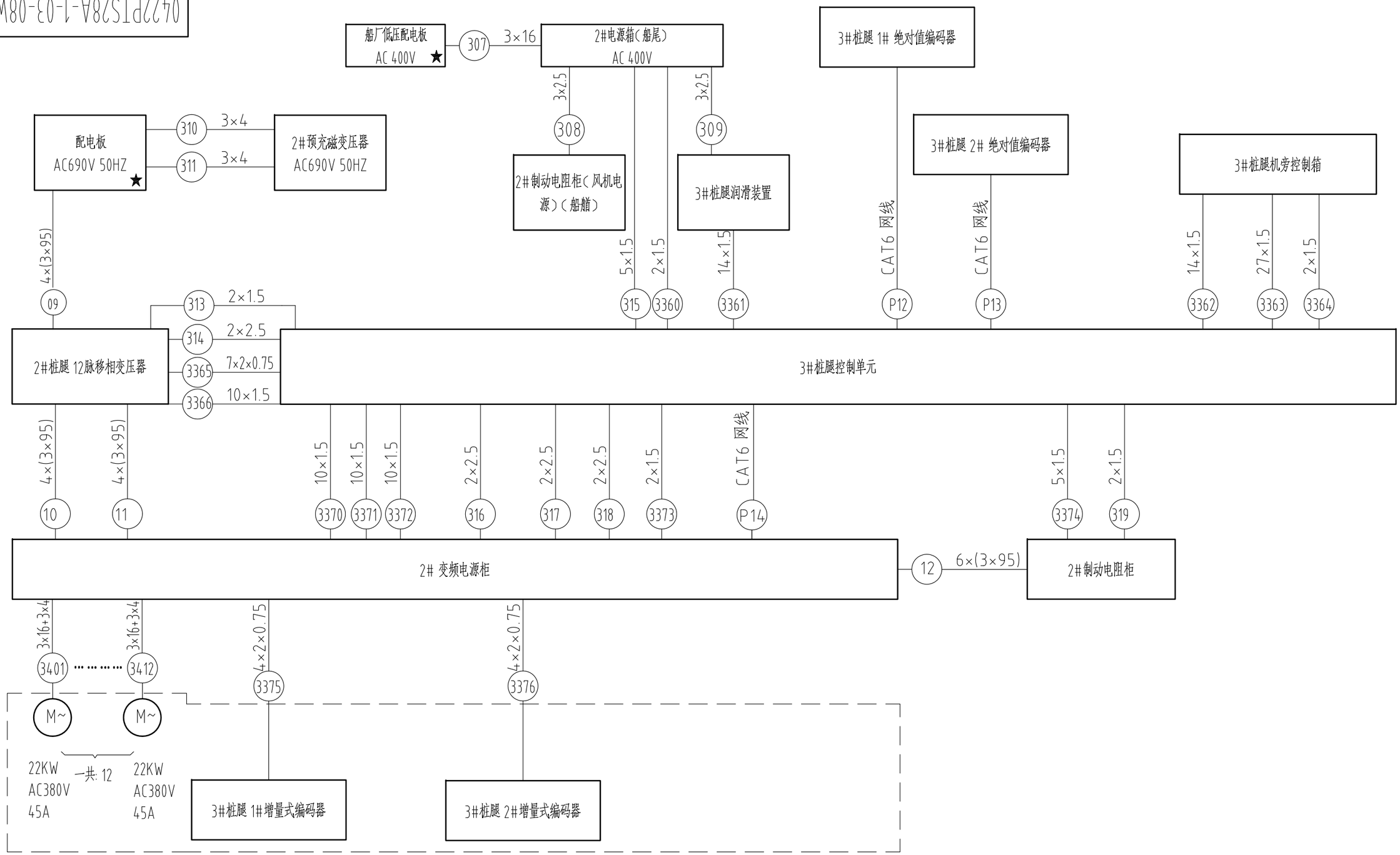

虚线框内为电机接线

NOTE:带编号的电缆不由WMMP提供.电缆的型号和数量仅供参考。

★=不由WMMP提供。

设计	
校对	
审核	
工艺	
标准	
批准	

标记	数量	修改单号	签字	日期

设计	
校核	
审核	
标检	
审定	
批准	

1320T电动齿轮齿条升降系统

电气线路图

所属装配图号	0422PTS28A-1-03-00WG
图号	0422PTS28A-1-03-08WG

标记	版本	重量	比例
S			1:1

共 8 页 第 6 页

武汉船用机械有限责任公司

0422PTS28A-1-03-08WG

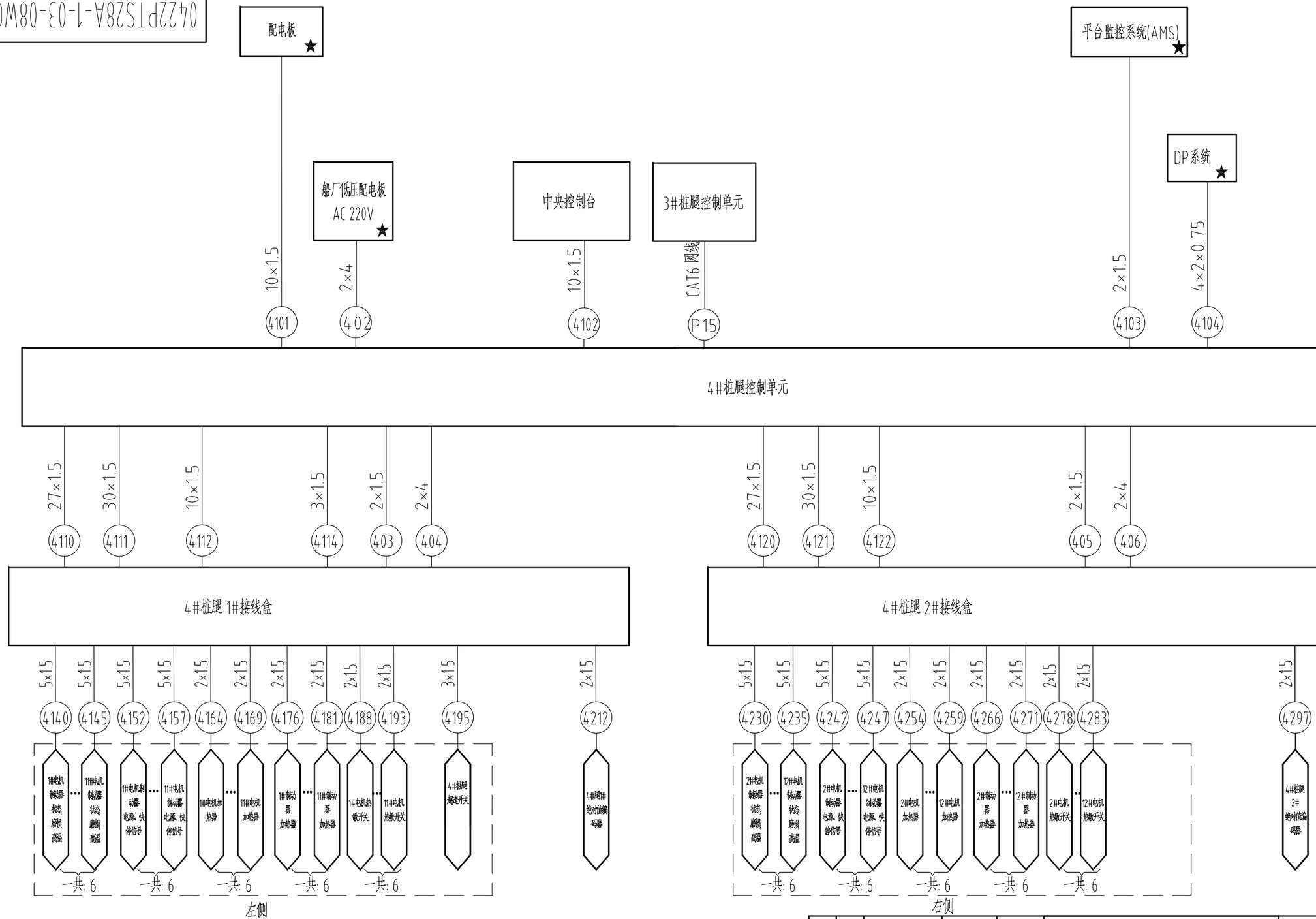

虚线框内为电机接线

★=不由WMMP提供。

NOTE:带编号的电缆不由WMMP提供.电缆的型号和数量仅供参考。

设计	
校对	
审核	
工艺	
标准	
批准	

标记	数量	修改单号	签字	日期

设计	
校核	
审核	
标检	
审定	
批准	

1320T电动齿轮齿条升降系统

电气线路图

所属装配图号	0422PTS28A-1-03-00WG
图号	0422PTS28A-1-03-08WG

标记	版本	重量	比例
S			1:1

共 8 页 第 1 页

武汉船用机械有限责任公司

0422PTS28A-1-03-08WG

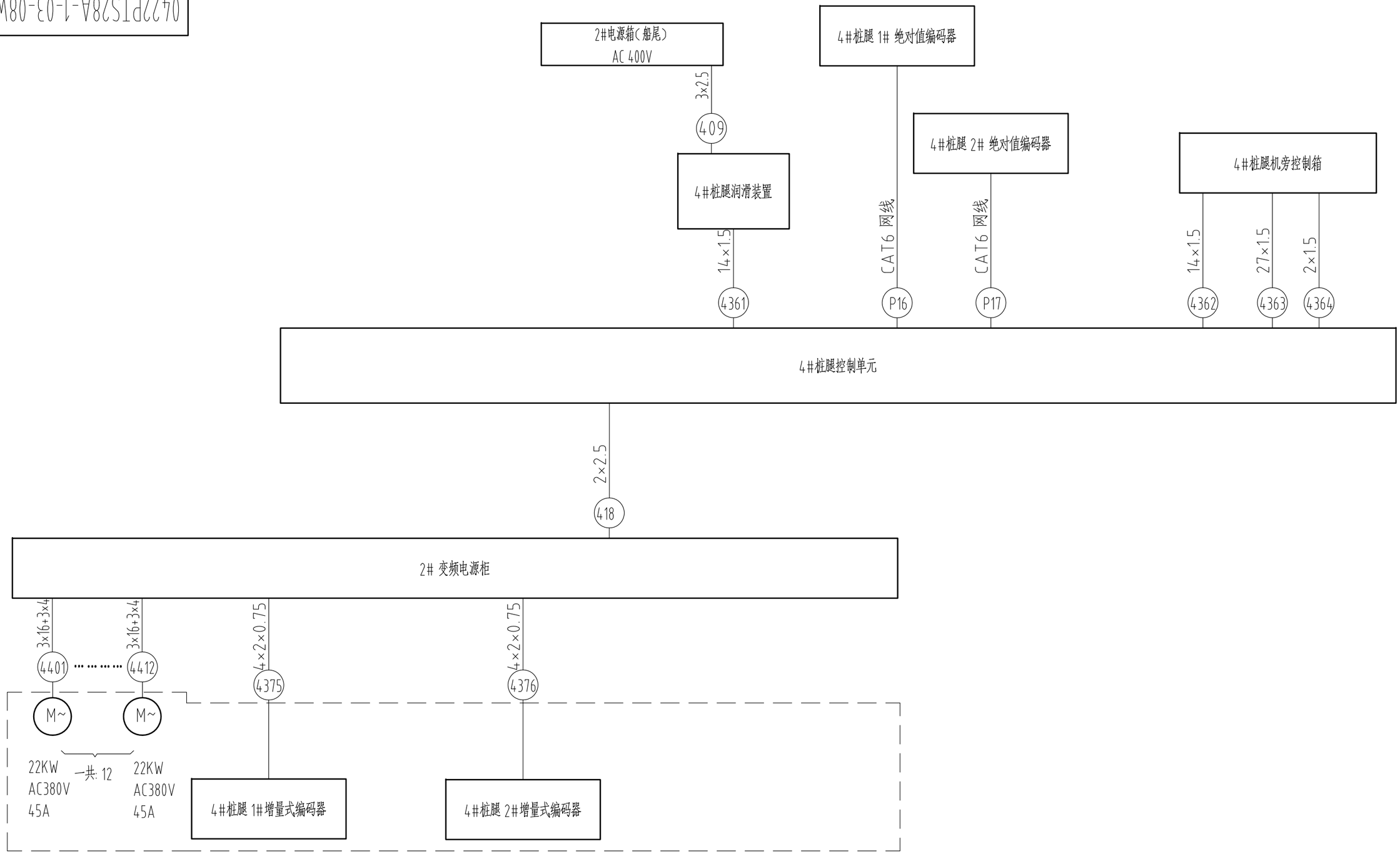

虚线框内为电机接线

NOTE:带编号的电缆不由WMMP提供.电缆的型号和数量仅供参考。

★=不由WMMP提供。

设计	
校对	
审核	
工艺	
标准	
批准	

标记	数量	修改单号	签字	日期

设计		
校核		
审核		
标检		
审定		
批准		

1320T电动齿轮齿条升降系统

电气线路图

所属装配图号	0422PTS28A-1-03-00WG
图号	0422PTS28A-1-03-08WG

标记	版本	重量	比例
S			1:1

共 8 页 第 8 页

武汉船用机械有限责任公司

电缆编号	页码
1/2/3/9/10/11	2
101/102	4
103/104	8
105/106	9
107/108/109	3
110/111	2
113/114	3
116-119	16
202,302,402	4
209,307,308,309,313,314,409	4
P1-P9 P11-P18	7
1101,2101,3101,4101	4
1102,2102,3102,4102	5
1103,2103,3103,4103	6
1104,2104,3104,4104	6
1110,1111,1114	8

电缆编号	页码
1120,1121	9
1140-1145,1152,1157	10
1164-1169,1176-1181,1188-1193	11
1195,1212	10
1230-1235,1242-1247	12
1254-1259,1266-1271,1278-1283	13
1297	12
1360	16
1361-1364	14
1365,1366,1375,1376	15
1370-1374	16
1401-1406	17
1407-1412	18

注意：

1.本电缆连接图仅包含1#桩腿，其他三条桩腿未列出电缆的连接方式与1#桩腿相同；

设计	
校对	
审核	
工艺	
标准	
批准	

标记	数量	修改单号	签字	日期
设计				
校核				
审核				
标检				
审定				
批准				

1320T电动齿轮齿条升降系统

电缆连接图

所属装配图号	0422PTS28A-1-03-00WG
图号	0422PTS28A-1-03-09WG
标记	S
版本	
重量	
比例	1:1
共 18 页	第 1 页

武汉船用机械有限责任公司

0422PTS28A-1-03-09WG

电缆	型号	芯号/	起点设备			屏蔽层	信号名称	终点设备			屏蔽层
编号	规格	颜色	名称	端子号	短接	接地		短接	端子号	名称	接地
01	4*(3*95)	1	平台配电板			√	AC690V/50Hz/3PH 主电源		A	1#移相变压器	√
		2					AC690V/50Hz/3PH 主电源		B		
		3					AC690V/50Hz/3PH 主电源		C		
09	4*(3*95)	1				√	AC690V/50Hz/3PH 主电源		A	2#移相变压器	√
		2					AC690V/50Hz/3PH 主电源		B		
		3					AC690V/50Hz/3PH 主电源		C		
02	4*(3*95)	1	1#移相变压器	a1		√	AC400V/50Hz/3PH 主电源		1L1	1#桩腿变频器ICU	√
		2		b1			AC400V/50Hz/3PH 主电源		1L2		
		3		c1			AC400V/50Hz/3PH 主电源		1L3		
03	4*(3*95)	1	1#移相变压器	a2		√	AC400V/50Hz/3PH 主电源		2L1	1#桩腿变频器ICU	√
		2		b2			AC400V/50Hz/3PH 主电源		2L2		
		3		c2			AC400V/50Hz/3PH 主电源		2L3		
10	4*(3*95)	1	2#移相变压器	a1		√	AC400V/50Hz/3PH 主电源		1L1	2#桩腿变频器ICU	√
		2		b1			AC400V/50Hz/3PH 主电源		1L2		
		3		c1			AC400V/50Hz/3PH 主电源		1L3		
11	4*(3*95)	1	2#移相变压器	a2		√	AC400V/50Hz/3PH 主电源		2L1	2#桩腿变频器ICU	√
		2		b2			AC400V/50Hz/3PH 主电源		2L2		
		3		c2			AC400V/50Hz/3PH 主电源		2L3		
110	3*4	1	平台配电板			√	AC690V/50Hz/3PH 配电板1#断路器端子2		原边:A	1#预充磁变压器	√
		2					AC690V/50Hz/3PH 配电板1#断路器端子4		原边:B		
		3					AC690V/50Hz/3PH 配电板1#断路器端子6		原边:C		
310	3*4	1				√	AC690V/50Hz/3PH 配电板2#断路器端子2		原边:A	2#预充磁变压器	√
		2					AC690V/50Hz/3PH 配电板2#断路器端子4		原边:B		
		3					AC690V/50Hz/3PH 配电板2#断路器端子6		原边:C		
111	3*4	1				√	AC690V/50Hz/3PH 配电板1#接触器端子2		副边:a	1#预充磁变压器	√
		2					AC690V/50Hz/3PH 配电板1#接触器端子4		副边:b		
		3					AC690V/50Hz/3PH 配电板1#接触器端子6		副边:c		
311	3*4	1				√	AC690V/50Hz/3PH 配电板2#接触器端子2		副边:a	2#预充磁变压器	√
		2					AC690V/50Hz/3PH 配电板2#接触器端子4		副边:b		
		3					AC690V/50Hz/3PH 配电板2#接触器端子6		副边:c		

电缆	型号	芯号/	起点设备			屏蔽层	信号名称	终点设备			屏蔽层
编号	规格	颜色	名称	端子号	短接	接地		短接	端子号	名称	接地
04	6*(3*95)	1-1/4-1	1#变频柜DBU	R1.1			制动单元 U2		R11	船艏制动电阻柜	√ 每根电缆的第三芯与屏蔽层一起接地
		1-2/4-2		R1.2			DC-		R12		
		2-1/5-1		R2.1			制动单元 V2		R21		
		2-2/5-2		R2.2			DC-		R22		
		3-1/6-1		R3.1			制动单元 W2		R31		
		3-2/6-2		R3.2			DC-		R32		
		1-3/2-3/3-3/4-3/5-		PE					PE		
12	6*(3*95)	1-1/4-1	2#变频柜DBU	R1.1			制动单元 U2		R11	船尾制动电阻柜	√ 每根电缆的第三芯与屏蔽层一起接地
		1-2/4-2		R1.2			DC-		R12		
		2-1/5-1		R2.1			制动单元 V2		R21		
		2-2/5-2		R2.2			DC-		R22		
		3-1/6-1		R3.1			制动单元 W2		R31		
		3-2/6-2		R3.2			DC-		R32		
		1-3/2-3/3-3/4-3/5-3/6-3		PE					PE		

注意:

1.本电缆连接图仅包含1#桩腿，其他三条桩腿未列出电缆的连接方式与1#桩腿相同；

★=不由WMMP提供

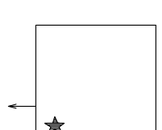

设计	
校对	
审核	
工艺	
标准	
批准	

标记	数量	修改单号	签字	日期
设计				
校核				
审核				
标检				
审定				
批准				

1320T电动齿轮齿条升降系统

电缆连接图

所属装配图号	0422PTS28A-1-03-00WG
图号	0422PTS28A-1-03-09WG
标记	S
版本	
重量	
比例	1:1
共 18 页	第 2 页

武汉船用机械有限责任公司

0422PTS28A-1-03-09WG

电缆	型号	芯号/	起点设备			屏蔽层	信号名称	终点设备			屏蔽层
编号	规格	颜色	名称	端子号	短接	接地		短接	端子号	名称	接地
108	3*2.5	1	1#电源箱（船艏）	X1:4		√	船艏制动电阻风机电源 380V/50HZ/3PH		R1	船艏1#制动电阻柜	√
		2		X1:5			船艏制动电阻风机电源 380V/50HZ/3PH		S1		
		3		X1:6			船艏制动电阻风机电源 380V/50HZ/3PH		T1		
308	3*2.5	1	2#电源箱（船艉）	X1:4		√	船艉制动电阻风机电源 380V/50HZ/3PH		R1	船艉2#制动电阻柜	√
		2		X1:5			船艉制动电阻风机电源 380V/50HZ/3PH		S1		
		3		X1:6			船艉制动电阻风机电源 380V/50HZ/3PH		T1		
109	3*2.5	1	1#电源箱（船艏）	X1:7		√	船艏自润滑系统电源 380V/50HZ/3PH		X1:1/L1	1#桩腿自动润滑控制柜	√
		2		X1:8			船艏自润滑系统电源 380V/50HZ/3PH		X1:2/L2		
		3		X1:9			船艏自润滑系统电源 380V/50HZ/3PH		X1:3/L3		
209	3*2.5	1	1#电源箱（船艏）	X2:7		√	船艏自润滑系统电源 380V/50HZ/3PH		X1:1/L1	2#桩腿自动润滑控制柜	√
		2		X2:8			船艏自润滑系统电源 380V/50HZ/3PH		X1:2/L2		
		3		X2:9			船艏自润滑系统电源 380V/50HZ/3PH		X1:3/L3		
309	3*2.5	1	2#电源箱（船艉）	X1:7		√	船艏自润滑系统电源 380V/50HZ/3PH		X1:1/L1	3#桩腿自动润滑控制柜	√
		2		X1:8			船艏自润滑系统电源 380V/50HZ/3PH		X1:2/L2		
		3		X1:9			船艏自润滑系统电源 380V/50HZ/3PH		X1:3/L3		
409	3*2.5	1	2#电源箱（船艉）	X2:7		√	船艏自润滑系统电源 380V/50HZ/3PH		X1:1/L1	4#桩腿自动润滑控制柜	√
		2		X2:8			船艏自润滑系统电源 380V/50HZ/3PH		X1:2/L2		
		3		X2:9			船艏自润滑系统电源 380V/50HZ/3PH		X1:3/L3		
107	3*16	1	平台配电板400V			√	电源箱电源 400V/50HZ/3PH		X0:R	1#电源箱	√
		2					电源箱电源 400V/50HZ/3PH		X0:S		
		3					电源箱电源 400V/50HZ/3PH		X0:T		
307	3*16	1	平台配电板400V★			√	电源箱电源 400V/50HZ/3PH		X0:R	2#电源箱	√
		2					电源箱电源 400V/50HZ/3PH		X0:S		
		3					电源箱电源 400V/50HZ/3PH		X0:T		
113	2*1.5	1	1#桩腿控制单元	X0:17		√	移相变压器风机电源 220V/50HZ		X1:1	1#桩腿移相变压器	√
		2		X0:18			移相变压器风机电源 220V/51HZ		X1:2		
313	2*2.5	1	3#桩腿控制单元	X0:17		√	移相变压器风机电源 220V/54HZ		X1:1	2#桩腿移相变压器	√
		2		X0:18			移相变压器风机电源 220V/55HZ		X1:2		
114	2*1.5	1	1#桩腿控制单元	X0:13		√	移相变压器照明加热电源 220V/50HZ		X1：H1	1#桩腿移相变压器	√
		2		X0:14			移相变压器照明加热电源 220V/50HZ		X1：H2		
314	2*1.5	1	3#桩腿控制单元	X0:13		√	移相变压器照明加热电源 220V/50HZ		X1：H1	2#桩腿移相变压器	√
		2		X0:14			移相变压器照明加热电源 220V/50HZ		X1：H2		

★=不由WMMP提供

设计	
校对	
审核	
工艺	
标准	
批准	

标记	数量	修改单号	签字	日期
设计				
校核				
审核				
标检				
审定				
批准				

1320T电动齿轮齿条升降系统

电缆连接图

所属装配图号	0422PTS28A-1-03-00WG
图号	0422PTS28A-1-03-09WG
标记	S
版本	
重量	
比例	1:1
共 18 页	第 3 页

WMMP 武汉船用机械有限责任公司

0422PTS28A-1-03-09WG

电缆	型号	芯号/	起点设备			屏蔽层	信号名称	终点设备			屏蔽层
编号	规格	颜色	名称	端子号	短接	接地		短接	端子号	名称	接地
101	2*2.5	1	平台配电板220V			√	中央控制台电源 220V/50HZ/1PH		X0:1	中央控制台	√
		2					中央控制台电源 220V/50HZ/1PH		X0:2		
102	2*4	1				√	1#桩腿控制单元电源 220V/50HZ/1PH		X0:1	1#桩腿控制单元	√
		2					1#桩腿控制单元电源 220V/50HZ/1PH		X0:2		
202	2*4	1				√	2#桩腿控制单元电源 220V/50HZ/1PH		X0:1	2#桩腿控制单元	√
		2					2#桩腿控制单元电源 220V/50HZ/1PH		X0:2		
302	2*4	1				√	3#桩腿控制单元电源 220V/50HZ/1PH		X0:1	3#桩腿控制单元	√
		2					3#桩腿控制单元电源 220V/50HZ/1PH		X0:2		
402	2*4	1				√	4#桩腿控制单元电源 220V/50HZ/1PH		X0:1	4#桩腿控制单元	√
		2					4#桩腿控制单元电源 220V/50HZ/1PH		X0:2		
1101	10*1.5	1	★平台配电板			√	重载问询（配电板）+		X15:1	1#桩腿控制单元	√
		2					重载问询（配电板）-		X15:2		
		3					升降运行信号（配电板）+		X15:3		
		4					升降运行信号（配电板）-		X15:4		
		5					允许启动信号（配电板）+		X15:5		
		6					允许启动信号（配电板）-		X15:6		
		7					配电板主开关状态（配电板）+		X15:7		
		8					配电板主开关状态（配电板）-		X15:8		
		9									
		10									
2101	10*1.5	1	★平台配电板			√	重载问询（配电板）+		X15:1	2#桩腿控制单元	√
		2					重载问询（配电板）-		X15:2		
		3					升降运行信号（配电板）+		X15:3		
		4					升降运行信号（配电板）-		X15:4		
		5					允许启动信号（配电板）+		X15:5		
		6					允许启动信号（配电板）-		X15:6		
		7					配电板主开关状态（配电板）+		X15:7		
		8					配电板主开关状态（配电板）-		X15:8		
		9									
		10									
3101	10*1.5	1	★平台配电板			√	重载问询（配电板）+		X15:1	3#桩腿控制单元	√
		2					重载问询（配电板）-		X15:2		
		3					升降运行信号（配电板）+		X15:3		
		4					升降运行信号（配电板）-		X15:4		
		5					允许启动信号（配电板）+		X15:5		
		6					允许启动信号（配电板）-		X15:6		
		7					配电板主开关状态（配电板）+		X15:7		
		8					配电板主开关状态（配电板）-		X15:8		
		9									
		10									
4101	10*1.5	1	★平台配电板			√	重载问询（配电板）+		X15:1	4#桩腿控制单元	√
		2					重载问询（配电板）-		X15:2		
		3					升降运行信号（配电板）+		X15:3		
		4					升降运行信号（配电板）-		X15:4		
		5					允许启动信号（配电板）+		X15:5		
		6					允许启动信号（配电板）-		X15:6		
		7					配电板主开关状态（配电板）+		X15:7		
		8					配电板主开关状态（配电板）-		X15:8		
		9									
		10									

★=不由WMMP提供

设计	
校对	
审核	
工艺	
标准	
批准	

标记	数量	修改单号	签字	日期
设计				
校核				
审核				
标检				
审定				
批准				

1320T电动齿轮齿条升降系统

电缆连接图

所属装配图号	0422PTS28A-1-03-00WG
图号	0422PTS28A-1-03-09WG

标记	版本	重量	比例
S			1:1

共 18 页 第 4 页

武汉船用机械有限责任公司

电缆	型号	芯号/	起点设备			屏蔽层	信号名称	终点设备			屏蔽层
编号	规格	颜色	名称	端子号	短接	接地		短接	端子号	名称	接地
1102	10*1.5	1	★	X1:1		√	机旁紧急停机输入+（输入）		X1:1	1#桩腿控制单元	√
		2		X1:2			机旁紧急停机输入-（输入）		X1:2		
		3	中央控制台	X1:3			紧急停机到桩腿控制单元+		X1:3		
		4		X1:4			紧急停机到桩腿控制单元-		X1:4		
		5		X1:5			至变频器紧急停止+		X1:5		
		6		X1:6			至变频器紧急停止-		X1:6		
		7		X1:7			至润滑系统紧急停止+		X1:7		
		8		X1:8			至润滑系统紧急停止-		X1:8		
2102	10*1.5	1	中央控制台	X2:1		√	机旁紧急停机输入+（输入）		X1:1	2#桩腿控制单元	√
		2		X2:2			机旁紧急停机输入-（输入）		X1:2		
		3		X2:3			紧急停机到桩腿控制单元+		X1:3		
		4		X2:4			紧急停机到桩腿控制单元-		X1:4		
		5		X2:5			备用		X1:5		
		6		X2:6			备用		X1:6		
		7		X2:7			至润滑系统紧急停止+		X1:7		
		8		X2:8			至润滑系统紧急停止-		X1:8		
3102	10*1.5	1	中央控制台	X3:1		√	机旁紧急停机输入+（输入）		X1:1	3#桩腿控制单元	√
		2		X3:2			机旁紧急停机输入-（输入）		X1:2		
		3		X3:3			紧急停机到桩腿控制单元+		X1:3		
		4		X3:4			紧急停机到桩腿控制单元-		X1:4		
		5		X3:5			至变频器紧急停止+		X1:5		
		6		X3:6			至变频器紧急停止-		X1:6		
		7		X3:7			至润滑系统紧急停止+		X1:7		
		8		X3:8			至润滑系统紧急停止-		X1:8		
4102	10*1.5	1	中央控制台	X4:1		√	机旁紧急停机输入+（输入）		X1:1	4#桩腿控制单元	√
		2		X4:2			机旁紧急停机输入-（输入）		X1:2		
		3		X4:3			紧急停机到桩腿控制单元+		X1:3		
		4		X4:4			紧急停机到桩腿控制单元-		X1:4		
		5		X4:5			备用		X1:5		
		6		X4:6			备用		X1:6		
		7		X4:7			至润滑系统紧急停止+		X1:7		
		8		X4:8			至润滑系统紧急停止-		X1:8		

★=不由WMMP提供

设计	
校对	
审核	
工艺	
标准	
批准	

标记	数量	修改单号	签字	日期
设计				
校核				
审核				
标检				
审定				
批准				

1320T电动齿轮齿条升降系统

电缆连接图

所属装配图号	0422PTS28A-1-03-00WG
图号	0422PTS28A-1-03-09WG
标记	S
版本	
重量	
比例	1:1
共 18 页	第 5 页

武汉船用机械有限责任公司

电缆	型号	芯号/	起点设备			屏蔽层	信号名称	终点设备			屏蔽层
编号	规格	颜色	名称	端子号	短接	接地		短接	端子号	名称	接地
1103	2*1.5	1	1#桩腿控制单元	X15:11		√	升降系统综合报警 +			平台监控系统	√
		2		X15:12			升降系统综合报警 -				
2103	2*1.5	1	2#桩腿控制单元	X15:11		√	升降系统综合报警 +				√
		2		X15:12			升降系统综合报警 -				
3103	2*1.5	1	3#桩腿控制单元	X15:11		√	升降系统综合报警 +				√
		2		X15:12			升降系统综合报警 -				
4103	2*1.5	1	4#桩腿控制单元	X15:11		√	升降系统综合报警 +				√
		2		X15:12			升降系统综合报警 -				
1104	4*2*0.75	1-1	1#桩腿控制单元	X15:15		√	桩腿位移信号(DP)+			DP系统	√
		1-2		X15:16			桩腿位移信号(DP)-				
		2-1		X15:17			桩腿触底信号(DP)+				
		2-2		X15:18			桩腿触底信号(DP)-				
2104	4*2*0.75	1-1	2#桩腿控制单元	X15:15		√	桩腿位移信号(DP)+				√
		1-2		X15:16			桩腿位移信号(DP)-				
		2-1		X15:17			桩腿触底信号(DP)+				
		2-2		X15:18			桩腿触底信号(DP)-				
3104	4*2*0.75	1-1	3#桩腿控制单元	X15:15		√	桩腿位移信号(DP)+				√
		1-2		X15:16			桩腿位移信号(DP)-				
		2-1		X15:17			桩腿触底信号(DP)+				
		2-2		X15:18			桩腿触底信号(DP)-				
4104	4*2*0.75	1-1	4#桩腿控制单元	X15:15		√	桩腿位移信号(DP)+				√
		1-2		X15:16			桩腿位移信号(DP)-				
		2-1		X15:17			桩腿触底信号(DP)+				
		2-2		X15:18			桩腿触底信号(DP)-				

设计	
校对	
审核	
工艺	
标准	
批准	

标记	数量	修改单号	签字	日期
设计				
校核				
审核				
标检				
审定				
批准				

1320T电动齿轮齿条升降系统

电缆连接图

所属装配图号	0422PTS28A-1-03-00WG
图号	0422PTS28A-1-03-09WG
标记	S
版本	
重量	
比例	1:1
共 18 页	第 6 页

武汉船用机械有限责任公司

0422PTS28A-1-03-09WG

电缆	型号	芯号/	起点设备			屏蔽层	信号名称	终点设备			屏蔽层
编号	规格	颜色	名称	端子号	短接	接地		短接	端子号	名称	接地
P1	以太网线		中央控制台			√	通讯信号			1#桩腿控制单元	√
P11	以太网线		1#桩腿控制单元			√	通讯信号			3#桩腿控制单元	√
P15	以太网线		3#桩腿控制单元			√	通讯信号			4#桩腿控制单元	√
P6	以太网线		4#桩腿控制单元			√	通讯信号			2#桩腿控制单元	√
P5	以太网线		2#桩腿控制单元			√	通讯信号			中央控制台	√
P10	以太网线		中央控制台			√	通讯信号			1#桩腿控制单元	√
P2	以太网线		1#桩腿控制单元			√	绝对值编码器信号			1#桩腿1#绝对值编码器	√
P3	以太网线		1#桩腿控制单元			√	绝对值编码器信号			1#桩腿2#绝对值编码器	√
P4	以太网线		1#桩腿控制单元			√	变频器通讯信号			1#桩腿变频器	√
P7	以太网线		2#桩腿控制单元			√	绝对值编码器信号			2#桩腿1#绝对值编码器	√
P8	以太网线		2#桩腿控制单元			√	绝对值编码器信号			2#桩腿2#绝对值编码器	√
P9	以太网线		2#桩腿控制单元			√	变频器通讯信号			2#桩腿变频器	√
P12	以太网线		3#桩腿控制单元			√	绝对值编码器信号			3#桩腿1#绝对值编码器	√
P13	以太网线		3#桩腿控制单元			√	绝对值编码器信号			3#桩腿2#绝对值编码器	√
P14	以太网线		3#桩腿控制单元			√	变频器通讯信号			3#桩腿变频器	√
P16	以太网线		4#桩腿控制单元			√	绝对值编码器信号			4#桩腿1#绝对值编码器	√
P17	以太网线		4#桩腿控制单元			√	绝对值编码器信号			4#桩腿2#绝对值编码器	√
P18	以太网线		4#桩腿控制单元			√	变频器通讯信号			4#桩腿变频器	√

设计	
校对	
审核	
工艺	
标准	
批准	

标记	数量	修改单号	签字	日期
设计				
校核				
审核				
标检				
审定				
批准				

1320T电动齿轮齿条升降系统

电缆连接图

所属装配图号	0422PTS28A-1-03-00WG
图号	0422PTS28A-1-03-09WG
标记	S
版本	
重量	
比例	1:1
共 18 页	第 7 页

WMMP 武汉船用机械有限责任公司

0422PTS28A-1-03-09WG

电缆	型号	芯号/	起点设备			屏蔽层	信号名称	终点设备			屏蔽层
编号	规格	颜色	名称	端子号	短接	接地		短接	端子号	名称	接地
1110	27*1.5	1	1#桩腿控制单元	X2:1		√	输入信号公共端		X2:1	1#桩腿1#接线盒	√
		2		X2:2			桩腿1#制动器打开信号		X2:2		
		3		X2:3			桩腿1#制动器磨损信号		X2:3		
		4		X2:4			桩腿1#制动器温度高信号		X2:4		
		5		X2:5			桩腿3#制动器打开信号		X2:6		
		6		X2:6			桩腿3#制动器磨损信号		X2:7		
		7		X2:7			桩腿3#制动器温度高信号		X2:8		
		8		X2:8			桩腿5#制动器打开信号		X2:10		
		9		X2:9			桩腿5#制动器磨损信号		X2:11		
		10		X2:10			桩腿5#制动器温度高信号		X2:12		
		11		X2:11			桩腿7#制动器打开信号		X2:14		
		12		X2:12			桩腿7#制动器磨损信号		X2:15		
		13		X2:13			桩腿7#制动器温度高信号		X2:16		
		14		X2:14			桩腿9#制动器打开信号		X2:18		
		15		X2:15			桩腿9#制动器磨损信号		X2:19		
		16		X2:16			桩腿9#制动器温度高信号		X2:20		
		17		X2:17			桩腿11#制动器打开信号		X2:22		
		18		X2:18			桩腿11#制动器磨损信号		X2:23		
		19		X2:19			桩腿11#制动器温度高信号		X2:24		
		20		X2:20					X2:26		
		21		X2:21					X2:27		
		22		X2:22					X2:28		
104	2*4	1	1#桩腿控制单元	X0：3		√	加热器电源 +		X3:1	1#桩腿1#接线盒	√
		2		X0：4			加热器电源 −		X3:2		

电缆	型号	芯号/	起点设备			屏蔽层	信号名称	终点设备			屏蔽层
编号	规格	颜色	名称	端子号	短接	接地		短接	端子号	名称	接地
1111	30*1.5	1	1#桩腿控制单元	X4:1		√	桩腿1#制动器开闸+		X1:1	1#桩腿1#接线盒	√
		2		X4:2			桩腿1#制动器开闸-		X1:2		
		3		X4:3			桩腿1#制动器快停+		X1:3		
		4		X4:4			桩腿1#制动器快停-		X1:4		
		5		X4:5			桩腿3#制动器开闸+		X1:5		
		6		X4:6			桩腿3#制动器开闸-		X1:6		
		7		X4:7			桩腿3#制动器快停+		X1:7		
		8		X4:8			桩腿3#制动器快停-		X1:8		
		9		X4:9			桩腿5#制动器开闸+		X1:9		
		10		X4:10			桩腿5#制动器开闸-		X1:10		
		11		X4:11			桩腿5#制动器快停+		X1:11		
		12		X4:12			桩腿5#制动器快停-		X1:12		
		13		X4:13			桩腿7#制动器开闸+		X1:13		
		14		X4:14			桩腿7#制动器开闸-		X1:14		
		15		X4:15			桩腿7#制动器快停+		X1:15		
		16		X4:16			桩腿7#制动器快停-		X1:16		
		17		X4:17			桩腿9#制动器开闸+		X1:17		
		18		X4:18			桩腿9#制动器开闸-		X1:18		
		19		X4:19			桩腿9#制动器快停+		X1:19		
		20		X4:20			桩腿9#制动器快停-		X1:20		
		21		X4:21			桩腿11#制动器开闸+		X1:21		
		22		X4:22			桩腿11#制动器开闸-		X1:22		
		23		X4:23			桩腿11#制动器快停+		X1:23		
		24		X4:24			桩腿11#制动器快停-		X1:24		
		25		X4:25					X1:25		
		26		X4:26					X1:26		
		27		X4:27					X1:27		
		28		X4:28					X1:28		
103	2*1.5	1		X4:29		√	桩腿左侧 绝对值编码器电源24V+		X1:29		
		2		X4:30			桩腿左侧 绝对值编码器电源0V		X1:30		
1114	3*1.5	1		X4:31		√	超速开关		X1:31		
		2		X4:32			超速开关		X1:32		
		3		X4:33			超速开关		X1:33		

设计	
校对	
审核	
工艺	
标准	
批准	

标记	数量	修改单号	签字	日期
设计				
校核				
审核				
标检				
审定				
批准				

1320T电动齿轮齿条升降系统

电缆连接图

所属装配图号	0422PTS28A-1-03-00WG
图号	0422PTS28A-1-03-09WG
标记	S
版本	
重量	
比例	1:1
共 18 页	第 8 页

WMIMP 武汉船用机械有限责任公司

电缆	型号	芯号/	起点设备			屏蔽层	信号名称	终点设备			屏蔽层
编号	规格	颜色	名称	端子号	短接	接地		短接	端子号	名称	接地
1120	27*1.5	1	1#桩腿控制单元	X3:1		√	输入信号公共端		X2:1	1#桩腿2#接线盒	√
		2		X3:2			桩腿2#制动器打开信号		X2:2		
		3		X3:3			桩腿2#制动器磨损信号		X2:3		
		4		X3:4			桩腿2#制动器温度高信号		X2:4		
		5		X3:5			桩腿4#制动器打开信号		X2:6		
		6		X3:6			桩腿4#制动器磨损信号		X2:7		
		7		X3:7			桩腿4#制动器温度高信号		X2:8		
		8		X3:8			桩腿6#制动器打开信号		X2:10		
		9		X3:9			桩腿6#制动器磨损信号		X2:11		
		10		X3:10			桩腿6#制动器温度高信号		X2:12		
		11		X3:11			桩腿8#制动器打开信号		X2:14		
		12		X3:12			桩腿8#制动器磨损信号		X2:15		
		13		X3:13			桩腿8#制动器温度高信号		X2:16		
		14		X3:14			桩腿10#制动器打开信号		X2:18		
		15		X3:15			桩腿10#制动器磨损信号		X2:19		
		16		X3:16			桩腿10#制动器温度高信号		X2:20		
		17		X3:17			桩腿12#制动器打开信号		X2:22		
		18		X3:18			桩腿12#制动器磨损信号		X2:23		
		19		X3:19			桩腿12#制动器温度高信号		X2:24		
		20		X3:20					X2:25		
		21		X3:21					X2:26		
		22		X3:22					X2:28		
106	2*4	1	1#桩腿控制单元	X0：5		√	加热器电源 +		X3:1	1#桩腿2#接线盒	√
		2		X0：6			加热器电源 -		X3:2		

电缆	型号	芯号/	起点设备			屏蔽层	信号名称	终点设备			屏蔽层
编号	规格	颜色	名称	端子号	短接	接地		短接	端子号	名称	接地
1121	30*1.5	1	1#桩腿控制单元	X5:1		√	桩腿2#制动器开闸+		X1:1	1#桩腿2#接线盒	√
		2		X5:2			桩腿2#制动器开闸-		X1:2		
		3		X5:3			桩腿2#制动器快停+		X1:3		
		4		X5:4			桩腿2#制动器快停-		X1:4		
		5		X5:5			桩腿4#制动器开闸+		X1:5		
		6		X5:6			桩腿4#制动器开闸-		X1:6		
		7		X5:7			桩腿4#制动器快停+		X1:7		
		8		X5:8			桩腿4#制动器快停-		X1:8		
		9		X5:9			桩腿6#制动器开闸+		X1:9		
		10		X5:10			桩腿6#制动器开闸-		X1:10		
		11		X5:11			桩腿6#制动器快停+		X1:11		
		12		X5:12			桩腿6#制动器快停-		X1:12		
		13		X5:13			桩腿8#制动器开闸+		X1:13		
		14		X5:14			桩腿8#制动器开闸-		X1:14		
		15		X5:15			桩腿8#制动器快停+		X1:15		
		16		X5:16			桩腿8#制动器快停-		X1:16		
		17		X5:17			桩腿10#制动器开闸+		X1:17		
		18		X5:18			桩腿10#制动器开闸-		X1:18		
		19		X5:19			桩腿10#制动器快停+		X1:19		
		20		X5:20			桩腿10#制动器快停-		X1:20		
		21		X5:21			桩腿12#制动器开闸+		X1:21		
		22		X5:22			桩腿12#制动器开闸-		X1:22		
		23		X5:23			桩腿12#制动器快停+		X1:23		
		24		X5:24			桩腿12#制动器快停-		X1:24		
		25		X5:25					X1:25		
		26		X5:26					X1:26		
		27		X5:27					X1:27		
		28		X5:28					X1:28		
105	2*1.5	1		X5:29			桩腿右侧 绝对值编码器电源24V+		X1:29		
		2		X5:30			桩腿右侧 绝对值编码器电源0V		X1:30		

设计	
校对	
审核	
工艺	
标准	
批准	

标记	数量	修改单号	签字	日期
设计				
校核				
审核				
标检				
审定				
批准				

1320T电动齿轮齿条升降系统

电缆连接图

所属装配图号	0422PTS28A-1-03-00WG
图号	0422PTS28A-1-03-09WG
标记	S
版本	
重量	
比例	1:1
共 18 页	第 9 页

WMMP 武汉船用机械有限责任公司

电缆编号	型号规格	芯号/颜色	起点设备 名称	起点设备 端子号	起点设备 短接	屏蔽层接地	信号名称	终点设备 短接	终点设备 端子号	终点设备 名称	屏蔽层接地
1140	5*1.5	1	1#桩腿1#接线盒	X2:1		√	输入信号公共端		X1：11	1#桩腿桩腿1#电机	√
		2		X2:2			桩腿1#制动器打开信号		X1：12		
		3		X2:3			桩腿1#制动器磨损信号		X1：15		
		4		X2:4			桩腿1#制动器温度高信号		X1：30		
1141	5*1.5	1		X2:5		√	输入信号公共端		X1：11	1#桩腿桩腿3#电机	√
		2		X2:6			桩腿3#制动器打开信号		X1：12		
		3		X2:7			桩腿3#制动器磨损信号		X1：15		
		4		X2:8			桩腿3#制动器温度高信号		X1：30		
1142	5*1.5	1		X2:9		√	输入信号公共端		X1：11	1#桩腿桩腿5#电机	√
		2		X2:10			桩腿5#制动器打开信号		X1：12		
		3		X2:11			桩腿5#制动器磨损信号		X1：15		
		4		X2:12			桩腿5#制动器温度高信号		X1：30		
1143	5*1.5	1		X2:13		√	输入信号公共端		X1：11	1#桩腿桩腿7#电机	√
		2		X2:14			桩腿7#制动器打开信号		X1：12		
		3		X2:15			桩腿7#制动器磨损信号		X1：15		
		4		X2:16			桩腿7#制动器温度高信号		X1：30		
1144	5*1.5	1		X2:17		√	输入信号公共端		X1：11	1#桩腿桩腿9#电机	√
		2		X2:18			桩腿9#制动器打开信号		X1：12		
		3		X2:19			桩腿9#制动器磨损信号		X1：15		
		4		X2:20			桩腿9#制动器温度高信号		X1：30		
1145	5*1.5	1		X2:21		√	输入信号公共端		X1：11	1#桩腿桩腿11#电机	
		2		X2:22			桩腿11#制动器打开信号		X1：12		
		3		X2:23			桩腿11#制动器磨损信号		X1：15		
		4		X2:24			桩腿11#制动器温度高信号		X1：30		

电缆编号	型号规格	芯号/颜色	起点设备 名称	起点设备 端子号	起点设备 短接	屏蔽层接地	信号名称	终点设备 短接	终点设备 端子号	终点设备 名称	屏蔽层接地
1152	5*1.5	1	1#桩腿1#接线盒	X1:1		√	桩腿1#制动器开闸+		整流器1	1#桩腿桩腿1#电机（整流器）	√
		2		X1:2			桩腿1#制动器开闸-		整流器2		
		3		X1:3			桩腿1#制动器快停+		整流器3		
		4		X1:4			桩腿1#制动器快停-		整流器4		
1153	5*1.5	1		X1:5		√	桩腿3#制动器开闸+		整流器1	1#桩腿桩腿3#电机（整流器）	√
		2		X1:6			桩腿3#制动器开闸-		整流器2		
		3		X1:7			桩腿3#制动器快停+		整流器3		
		4		X1:8			桩腿3#制动器快停-		整流器4		
1154	5*1.5	1		X1:9		√	桩腿5#制动器开闸+		整流器1	1#桩腿桩腿5#电机（整流器）	√
		2		X1:10			桩腿5#制动器开闸-		整流器2		
		3		X1:11			桩腿5#制动器快停+		整流器3		
		4		X1:12			桩腿5#制动器快停-		整流器4		
1155	5*1.5	1		X1:13		√	桩腿7#制动器开闸+		整流器1	1#桩腿桩腿7#电机（整流器）	√
		2		X1:14			桩腿7#制动器开闸-		整流器2		
		3		X1:15			桩腿7#制动器快停+		整流器3		
		4		X1:16			桩腿7#制动器快停-		整流器4		
1156	5*1.5	1		X1:17		√	桩腿9#制动器开闸+		整流器1	1#桩腿桩腿9#电机（整流器）	√
		2		X1:18			桩腿9#制动器开闸-		整流器2		
		3		X1:19			桩腿9#制动器快停+		整流器3		
		4		X1:20			桩腿9#制动器快停-		整流器4		
1157	5*1.5	1		X1:21		√	桩腿11#制动器开闸+		整流器1	1#桩腿桩腿11#电机（整流器）	√
		2		X1:22			桩腿11#制动器开闸-		整流器2		
		3		X1:23			桩腿11#制动器快停+		整流器3		
		4		X1:24			桩腿11#制动器快停-		整流器4		
1212	2*1.5	1		X1:29		√	绝对值编码器电源24V+		M12插头:1	1#桩腿1#绝对值编码器	√
		2		X1:30			绝对值编码器电源0V		M12插头:3		
1195	3*1.5	1		X1:31		√	超速开关公共		X1:1	1#桩腿1#增量式编码器接线盒(9号电机)	√
		2		X1:32			超速开关R4		X1:2		
		3		X1:33			超速开关R3		X1:4		

设计	
校对	
审核	
工艺	
标准	
批准	

标记	数量	修改单号	签字	日期

设计		
校核		
审核		
标检		
审定		
批准		

1320T电动齿轮齿条升降系统

电缆连接图

所属装配图号	0422PTS28A-1-03-00WG
图号	0422PTS28A-1-03-09WG

标记	版本	重量	比例
S			1:1

共 18 页 第 10 页

武汉船用机械有限责任公司

0422PTS28A-1-03-09WG

电缆编号	型号规格	芯号/颜色	起点设备 名称	起点设备 端子号	起点设备 短接	屏蔽层接地	信号名称	终点设备 短接	终点设备 端子号	终点设备 名称	屏蔽层接地
1164	2*1.5	1	1#桩腿1#接线盒	X3:1		√	1#电机防潮加热器电源 +		X1:1	1#桩腿桩腿1#电机主接线盒	√
		2		X3:2			1#电机防潮加热器电源 −		X1:2		
1165	2*1.5	1		X3:3		√	3#电机防潮加热器电源 +		X1:1	1#桩腿桩腿3#电机主接线盒	√
		2		X3:4			3#电机防潮加热器电源 -		X1:2		
1166	2*1.5	1		X3:5		√	5#电机防潮加热器电源 +		X1:1	1#桩腿桩腿5#电机主接线盒	√
		2		X3:6			5#电机防潮加热器电源 -		X1:2		
1167	2*1.5	1		X3:7		√	7#电机防潮加热器电源 +		X1:1	1#桩腿桩腿7#电机主接线盒	√
		2		X3:8			7#电机防潮加热器电源 -		X1:2		
1168	2*1.5	1		X3:9		√	9#电机防潮加热器电源 +		X1:1	1#桩腿桩腿9#电机主接线盒	√
		2		X3:10			9#电机防潮加热器电源 -		X1:2		
1169	2*1.5	1		X3:11		√	11#电机防潮加热器电源 +		X1:1	1#桩腿桩腿11#电机主接线盒	√
		2		X3:12			11#电机防潮加热器电源 -		X1:2		
1176	2*1.5	1		X3:15		√	1#电机电磁制动器防潮加热器电源 +		X1:28	1#桩腿桩腿1#电机辅接线盒	√
		2		X3:16			1#电机电磁制动器防潮加热器电源 −		X1:29		
1177	2*1.5	1		X3:17		√	3#电机电磁制动器防潮加热器电源 +		X1:28	1#桩腿桩腿3#电机辅接线盒	√
		2		X3:18			3#电机电磁制动器防潮加热器电源 -		X1:29		
1178	2*1.5	1		X3:19		√	5#电机电磁制动器防潮加热器电源 +		X1:28	1#桩腿桩腿5#电机辅接线盒	√
		2		X3:20			5#电机电磁制动器防潮加热器电源 -		X1:29		
1179	2*1.5	1		X3:21		√	7#电机电磁制动器防潮加热器电源 +		X1:28	1#桩腿桩腿7#电机辅接线盒	√
		2		X3:22			7#电机电磁制动器防潮加热器电源 -		X1:29		
1180	2*1.5	1		X3:23		√	9#电机电磁制动器防潮加热器电源 +		X1:28	1#桩腿桩腿9#电机辅接线盒	√
		2		X3:24			9#电机电磁制动器防潮加热器电源 -		X1:29		
1181	2*1.5	1		X3:25		√	11#电机电磁制动器防潮加热器电源 +		X1:28	1#桩腿桩腿11#电机辅接线盒	√
		2		X3:26			11#电机电磁制动器防潮加热器电源 -		X1:29		
1188	2*1.5	1	1#桩腿1#接线盒	X2:29		√	1#电机热敏开关 +		X1:3	1#桩腿1#电机主接线盒	√
		2		X2:30			1#电机热敏开关 -		X1:4		
1189	2*1.5	1		X2:31		√	3#电机热敏开关 +		X1:3	1#桩腿3#电机主接线盒	√
		2		X2:32			3#电机热敏开关 -		X1:4		
1190	2*1.5	1		X2:33		√	5#电机热敏开关 +		X1:3	1#桩腿5#电机主接线盒	√
		2		X2:34			5#电机热敏开关 -		X1:4		
1191	2*1.5	1		X2:35		√	7#电机热敏开关 +		X1:3	1#桩腿7#电机主接线盒	√
		2		X2:36			7#电机热敏开关 -		X1:4		
1192	2*1.5	1		X2:37		√	9#电机热敏开关 +		X1:3	1#桩腿9#电机主接线盒	√
		2		X2:38			9#电机热敏开关 -		X1:4		
1193	2*1.5	1		X2:39		√	11#电机热敏开关 +		X1:3	1#桩腿11#电机主接线盒	√
		2		X2:40			11#电机热敏开关 -		X1:4		

设计	
校对	
审核	
工艺	
标准	
批准	

标记	数量	修改单号	签字	日期

设计		
校核		
审核		
标检		
审定		
批准		

1320T电动齿轮齿条升降系统

电缆连接图

所属装配图号	0422PTS28A-1-03-00WG
图号	0422PTS28A-1-03-09WG
标记	S
版本	
重量	
比例	1:1
共 18 页	第 11 页

WMMP 武汉船用机械有限责任公司

0422PTS28A-1-03-09WG

电缆编号	型号规格	芯号/颜色	起点设备名称	起点设备端子号	起点设备短接	屏蔽层接地	信号名称	终点设备短接	终点设备端子号	终点设备名称	屏蔽层接地
1230	5*1.5	1	1#桩腿2#接线盒	X2:1		√	输入信号公共端		X1：11	1#桩腿桩腿2#电机	√
		2		X2:2			桩腿2#制动器打开信号		X1：12		
		3		X2:3			桩腿2#制动器磨损信号		X1：15		
		4		X2:4			桩腿2#制动器温度高信号		X1：30		
1231	5*1.5	1		X2:5		√	输入信号公共端		X1：11	1#桩腿桩腿4#电机	√
		2		X2:6			桩腿4#制动器打开信号		X1：12		
		3		X2:7			桩腿4#制动器磨损信号		X1：15		
		4		X2:8			桩腿4#制动器温度高信号		X1：30		
1232	5*1.5	1		X2:9		√	输入信号公共端		X1：11	1#桩腿桩腿6#电机	√
		2		X2:10			桩腿6#制动器打开信号		X1：12		
		3		X2:11			桩腿6#制动器磨损信号		X1：15		
		4		X2:12			桩腿6#制动器温度高信号		X1：30		
1233	5*1.5	1		X2:13		√	输入信号公共端		X1：11	1#桩腿桩腿8#电机	√
		2		X2:14			桩腿8#制动器打开信号		X1：12		
		3		X2:15			桩腿8#制动器磨损信号		X1：15		
		4		X2:16			桩腿8#制动器温度高信号		X1：30		
1234	5*1.5	1		X2:17		√	输入信号公共端		X1：11	1#桩腿桩腿10#电机	√
		2		X2:18			桩腿10#制动器打开信号		X1：12		
		3		X2:19			桩腿10#制动器磨损信号		X1：15		
		4		X2:20			桩腿10#制动器温度高信号		X1：30		
1235	5*1.5	1		X2:21		√	输入信号公共端		X1：11	1#桩腿桩腿12#电机	√
		2		X2:22			桩腿12#制动器打开信号		X1：12		
		3		X2:23			桩腿12#制动器磨损信号		X1：15		
		4		X2:24			桩腿12#制动器温度高信号		X1：30		

电缆编号	型号规格	芯号/颜色	起点设备名称	起点设备端子号	起点设备短接	屏蔽层接地	信号名称	终点设备短接	终点设备端子号	终点设备名称	屏蔽层接地
1242	5*1.5	1	1#桩腿2#接线盒	X1:1		√	桩腿2#制动器开闸+		整流器1	1#桩腿桩腿2#电机（整流器）	√
		2		X1:2			桩腿2#制动器开闸-		整流器2		
		3		X1:3			桩腿2#制动器快停+		整流器3		
		4		X1:4			桩腿2#制动器快停-		整流器4		
1243	5*1.5	1		X1:5		√	桩腿4#制动器开闸+		整流器1	1#桩腿桩腿4#电机（整流器）	√
		2		X1:6			桩腿4#制动器开闸-		整流器2		
		3		X1:7			桩腿4#制动器快停+		整流器3		
		4		X1:8			桩腿4#制动器快停-		整流器4		
1244	5*1.5	1		X1:9		√	桩腿6#制动器开闸+		整流器1	1#桩腿桩腿6#电机（整流器）	√
		2		X1:10			桩腿6#制动器开闸-		整流器2		
		3		X1:11			桩腿6#制动器快停+		整流器3		
		4		X1:12			桩腿6#制动器快停-		整流器4		
1245	5*1.5	1		X1:13		√	桩腿8#制动器开闸+		整流器1	1#桩腿桩腿8#电机（整流器）	√
		2		X1:14			桩腿8#制动器开闸-		整流器2		
		3		X1:15			桩腿8#制动器快停+		整流器3		
		4		X1:16			桩腿8#制动器快停-		整流器4		
1246	5*1.5	1		X1:17		√	桩腿10#制动器开闸+		整流器1	1#桩腿桩腿10#电机（整流器）	√
		2		X1:18			桩腿10#制动器开闸-		整流器2		
		3		X1:19			桩腿10#制动器快停+		整流器3		
		4		X1:20			桩腿10#制动器快停-		整流器4		
1247	5*1.5	1		X1:21		√	桩腿12#制动器开闸+		整流器1	1#桩腿桩腿12#电机（整流器）	√
		2		X1:22			桩腿12#制动器开闸-		整流器2		
		3		X1:23			桩腿12#制动器快停+		整流器3		
		4		X1:24			桩腿12#制动器快停-		整流器4		
1297	2*1.5	1		X1:29		√	绝对值编码器电源24V+		M12插头:1	1#桩腿1#绝对值编码器	√
		2		X1:30			绝对值编码器电源0V		M12插头:3		

设计	
校对	
审核	
工艺	
标准	
批准	

标记	数量	修改单号	签字	日期

设计	
校核	
审核	
标检	
审定	
批准	

1320T电动齿轮齿条升降系统

电缆连接图

所属装配图号	0422PTS28A-1-03-00WG
图号	0422PTS28A-1-03-09WG

标记	版本	重量	比例
S			1:1

共 18 页 第 12 页

武汉船用机械有限责任公司

0422PTS28A-1-03-09WG

电缆	型号	芯号/	起点设备			屏蔽层	信号名称	终点设备			屏蔽层
编号	规格	颜色	名称	端子号	短接	接地		短接	端子号	名称	接地
1254	2*1.5	1	1#桩腿2#接线盒	X3:1		√	2#电机防潮加热器电源 +		X1:1	1#桩腿桩腿2#电机主接线盒	√
		2		X3:2			2#电机防潮加热器电源 −		X1:2		
1255	2*1.5	1		X3:3		√	4#电机防潮加热器电源 +		X1:1	1#桩腿桩腿4#电机主接线盒	√
		2		X3:4			4#电机防潮加热器电源 -		X1:2		
1256	2*1.5	1		X3:5		√	6#电机防潮加热器电源 +		X1:1	1#桩腿桩腿6#电机主接线盒	√
		2		X3:6			6#电机防潮加热器电源 -		X1:2		
1257	2*1.5	1		X3:7		√	8#电机防潮加热器电源 +		X1:1	1#桩腿桩腿8#电机主接线盒	√
		2		X3:8			8#电机防潮加热器电源 -		X1:2		
1258	2*1.5	1		X3:9		√	10#电机防潮加热器电源 +		X1:1	1#桩腿桩腿10#电机主接线盒	√
		2		X3:10			10#电机防潮加热器电源 -		X1:2		
1259	2*1.5	1		X3:11		√	12#电机防潮加热器电源 +		X1:1	1#桩腿桩腿12#电机主接线盒	√
		2		X3:12			12#电机防潮加热器电源 -		X1:2		
1266	2*1.5	1		X3:15		√	2#电机电磁制动器防潮加热器电源 +		X1:28	1#桩腿桩腿2#电机辅接线盒	√
		2		X3:16			2#电机电磁制动器防潮加热器电源 −		X1:29		
1267	2*1.5	1		X3:17		√	4#电机电磁制动器防潮加热器电源 +		X1:28	1#桩腿桩腿4#电机辅接线盒	√
		2		X3:18			4#电机电磁制动器防潮加热器电源 -		X1:29		
1268	2*1.5	1		X3:19		√	6#电机电磁制动器防潮加热器电源 +		X1:28	1#桩腿桩腿6#电机辅接线盒	√
		2		X3:20			6#电机电磁制动器防潮加热器电源 -		X1:29		
1269	2*1.5	1		X3:21		√	8#电机电磁制动器防潮加热器电源 +		X1:28	1#桩腿桩腿8#电机辅接线盒	√
		2		X3:22			8#电机电磁制动器防潮加热器电源 -		X1:29		
1270	2*1.5	1		X3:23		√	10#电机电磁制动器防潮加热器电源 +		X1:28	1#桩腿桩腿10#电机辅接线盒	√
		2		X3:24			10#电机电磁制动器防潮加热器电源 -		X1:29		
1271	2*1.5	1		X3:25		√	12#电机电磁制动器防潮加热器电源 +		X1:28	1#桩腿桩腿12#电机辅接线盒	√
		2		X3:26			12#电机电磁制动器防潮加热器电源 -		X1:29		
1278	2*1.5	1	1#桩腿2#接线盒	X2:29		√	2#电机热敏开关 +		X1:3	1#桩腿2#电机主接线盒	√
		2		X2:30			2#电机热敏开关 -		X1:4		
1279	2*1.5	1		X2:31		√	4#电机热敏开关 +		X1:3	1#桩腿4#电机主接线盒	√
		2		X2:32			4#电机热敏开关 -		X1:4		
1280	2*1.5	1		X2:33		√	6#电机热敏开关 +		X1:3	1#桩腿6#电机主接线盒	√
		2		X2:34			6#电机热敏开关 -		X1:4		
1281	2*1.5	1		X2:35		√	8#电机热敏开关 +		X1:3	1#桩腿8#电机主接线盒	√
		2		X2:36			8#电机热敏开关 -		X1:4		
1282	2*1.5	1		X2:37		√	10#电机热敏开关 +		X1:3	1#桩腿10#电机主接线盒	√
		2		X2:38			10#电机热敏开关 -		X1:4		
1283	2*1.5	1		X2:39		√	12#电机热敏开关 +		X1:3	1#桩腿12#电机主接线盒	√
		2		X2:40			12#电机热敏开关 -		X1:4		

设计	
校对	
审核	
工艺	
标准	
批准	

标记	数量	修改单号	签字	日期
设计				
校核				
审核				
标检				
审定				
批准				

1320T电动齿轮齿条升降系统

电缆连接图

所属装配图号	0422PTS28A-1-03-00WG
图号	0422PTS28A-1-03-09WG
标记	S
版本	
重量	
比例	1:1
共 18 页	第 13 页

WMMIP 武汉船用机械有限责任公司

0422PTS28A-1-03-09WG

电缆	型号	芯号/	起点设备			屏蔽层	信号名称	终点设备			屏蔽层
编号	规格	颜色	名称	端子号	短接	接地		短接	端子号	名称	接地
1361	14*1.5	1	1#桩腿桩腿控制单元	X14:1		√	输入信号公共端		X1:27	1#桩腿润滑系统控制箱	√
		2		X14:4			润滑系统远程控制		X1:28		
		3		X14:3			润滑系统运行信号		X1:29		
		4		X14:5			润滑系统综合报警		X1:30		
		5		X14:6			润滑系统低油位		X1:31		
		6		X14:7			备用		/		
		7		X14:8			备用		/		
		8		X14:9			备用		/		
		9		X14:9			备用		/		
		10		X14:10			输出信号公共端		X2:22		
		11		X14:11			自动润滑起动		X2:23		
		12		X14:12			自动润滑停止		X2:25		
		13		X14:13			急停+		X2:20		
		14		X14:14			急停-		X2:21		
1362	14*1.5	1	1#桩腿桩腿控制单元	X9:1		√	信号输出公共端		X2:1	1#桩腿机旁控制箱	√
		2		X9:2			机旁电源指示		X2:2		
		3		X9:3			机旁控制开指示		X2:3		
		4		X9:4			电磁制动器释放指示		X2:4		
		5		X9:5			桩腿上升指示		X2:5		
		6		X9:6			桩腿下降指示		X2:6		
		7		X9:7			备用		/		
		8		X9:8			备用		/		
		9		X9:9			报警指示		X2:7		
		10		X9:10			蜂鸣器		X2:8		
1364	2*1.5	1		X9:11			急停+		X2:9		
		2		X9:12			急停-		X2:10		
1363	27*1.5	1	1#桩腿桩腿控制单元	X8:1		√	输入信号公共端	√	X1:1	1#桩腿机旁控制箱	√
		2		X8:2			机旁控制开		X1:2		
		3		X8:3			桩腿上升		X1:3		
		4		X8:4			停止		X1:4		
		5		X8:5			桩腿下降		X1:5		
		6		X8:6			桩腿左侧选择		X1:6		
		7		X8:7			桩腿右侧选择		X1:7		
		8		X8:8			1#电机选择		X1:8		
		9		X8:9			2#电机选择		X1:9		
		10		X8:10			3#电机选择		X1:10		
		11		X8:11			4#电机选择		X1:11		
		12		X8:12			5#电机选择		X1:12		
		13		X8:13			6#电机选择		X1:13		
		14		X8:14			7#电机选择		X1:14		
		15		X8:16			单个电磁制动器释放		X1:15		
		16		X8:17			故障复位		X1:16		
		17		X8:18			试灯/消音		X1:17		
		18		X8:19			应急控制开		X1:18		

设计	
校对	
审核	
工艺	
标准	
批准	

标记	数量	修改单号	签字	日期
设计				
校核				
审核				
标检				
审定				
批准				

1320T电动齿轮齿条升降系统

电缆连接图

所属装配图号	0422PTS28A-1-03-00WG
图号	0422PTS28A-1-03-09WG
标记	S
版本	
重量	
比例	1:1
共 18 页	第 14 页

武汉船用机械有限责任公司

电缆	型号	芯号/	起点设备			屏蔽层	信号名称	终点设备			屏蔽层
编号	规格	颜色	名称	端子号	短接	接地		短接	端子号	名称	接地
1366	10*1.5	1	1#桩腿控制单元	X13:1		√	移相变压器绕组高温停机+		X1:3	1#桩腿移相变压器	√
		2		X13:2			移相变压器绕组高温停机-		X1:4		
		3		X13:3			移相变压器绕组高温报警+		X1:5		
		4		X13:4			移相变压器绕组高温报警-		X1:6		
		5		X13:5			移相变压器风机运行+		X1:11		
		6		X13:6			移相变压器风机运行-		X1:12		
		7		X13:7			温控器故障+		X1:7		
		8		X13:8			温控器故障-		X1:8		
1365	7*2*0.75	9		X13:9			绕组a1温度PT100+		X1:14		
		10		X13:10			绕组a1温度PT100-		X1:15		
		11		X13:11			绕组b1温度PT100+		X1:17		
		12		X13:12			绕组b1温度PT100-		X1:18		
		13		X13:13			绕组c1温度PT100+		X1:20		
		14		X13:14			绕组c1温度PT100-		X1:21		
		15		X13:15			绕组a2温度PT100+		X1:23		
		16		X13:16			绕组a2温度PT100-		X1:24		
		17		X13:17			绕组b2温度PT100+		X1:26		
		18		X13:18			绕组b2温度PT100-		X1:27		
		19		X13:19			绕组c2温度PT100+		X1:29		
		20		X13:20			绕组c2温度PT100-		X1:30		

电缆	型号	芯号/	起点设备			屏蔽层	信号名称	终点设备			屏蔽层
编号	规格	颜色	名称	端子号	短接	接地		短接	端子号	名称	接地
1375	4*2*0.75	1-1	1#桩腿变频器INU11.09	X94:8		√	9#增量式编码器 24V+		X1:23	1#桩腿桩腿9#电机(辅助接线盒)	√
		1-2		X94:9			9#增量式编码器 0V		X1:22		
		2-1		X94:1			9#增量式编码器 A+		X1:21		
		2-2		X94:2			9#增量式编码器 A-		X1:20		
		3-1		X94:3			9#增量式编码器 B+		X1:19		
		3-2		X94:4			9#增量式编码器 B-		X1:18		
		4-1		X94:5			9#增量式编码器 Z+		X1:17		
		4-2		X94:6			9#增量式编码器 Z-		X1:16		
1376	4*2*0.75	1-1	1#桩腿变频器INU11.10	X34:8		√	10#增量式编码器 24V+		X1:23	1#桩腿桩腿10#电机(辅助接线盒)	√
		1-2		X34:7			10#增量式编码器 0V		X1:22		
		2-1		X34:1			10#增量式编码器 A+		X1:21		
		2-2		X34:2			10#增量式编码器 A-		X1:20		
		3-1		X34:3			10#增量式编码器 B+		X1:19		
		3-2		X34:4			10#增量式编码器 B-		X1:18		
		4-1		X34:5			10#增量式编码器 Z+		X1:17		
		4-2		X34:6			10#增量式编码器 Z-		X1:16		

设计	
校对	
审核	
工艺	
标准	
批准	

标记	数量	修改单号	签字	日期
设计				
校核				
审核				
标检				
审定				
批准				

1320T电动齿轮齿条升降系统

电缆连接图

所属装配图号	0422PTS28A-1-03-00WG
图号	0422PTS28A-1-03-09WG
标记	S
版本	
重量	
比例	1:1
共 18 页	第 15 页

武汉船用机械有限责任公司

电缆	型号	芯号/	起点设备			屏蔽层	信号名称	终点设备			屏蔽层
编号	规格	颜色	名称	端子号	短接	接地		短接	端子号	名称	接地
1370	10*1.5	1	1#桩腿控制单元	X11:1		√	公共端		X29:3	1#桩腿变频器辅助柜ACU	√
		2		X11:2			整流模块故障		X29:4		
		3		X11:3			整流模块运行		X29:5		
		4		X11:4			制动单元故障信号		X29:6		
		5		X11:5			主断路器1状态信号		X29:7		
		6		X11:6			主断路器2状态信号		X29:8		
		7		X11:7			备用（母联开关状态信号）		/		
1371	10*1.5	1		X11:8			信号输出公共端		X29:13		
		2		X11:9			急停故障复位		X29:14		
		3		X11:10			整流单元远程合闸		X29:15		
		4		X11:11			整流单元远程分闸		X29:16		
		5		X11:12			整流、逆变、制动单元故障复位		X29:17		
		6		X11:13			备用		/		
		7		X11:14			备用		/		
1372	10*1.5	1		X16:1			急停反馈信号+		X29:26		
		2		X16:2			急停反馈信号-		X29:27		
		3		X16:3			辅助电压连接监测+		X22：57		
		4		X16:4			辅助电压连接监测-		X22：58		
		5		X16:5			接地故障报警+		X90：25		
		6		X16:6			接地故障报警-		X90：26		
		7		X16:7			柜内加热器反馈+		X22：47		
		8		X16:8			柜内加热器反馈-		X22：48		
116	2*2.5	1	1#桩腿控制单元	X0:15		√	供给变频器控制辅助电源 220V/50HZ/1PH	控制电源	X3.1：1L	1#桩腿变频器辅助柜ACU	√
		2		X0:16			供给变频器控制辅助电源 220V/50HZ/2PH		X3.1：2N		
117	2*2.5	1		X0:11		√	供给变频器控制电源 220V/50HZ/1PH	照明加热	X3.2：1L		√
		2		X0:12			供给变频器控制电源 220V/50HZ/1PH		X3.2：2N		
118	2*2.5	1		X0:21		√	至桩腿控制单元刹车电源220V/50HZ/1P	刹车电源	X10.1：1L		√
		2		X0:22			至桩腿控制单元刹车电源220V/50HZ/1P		X10.1：2N		
1373	2*1.5	1		X11：15		√	变频柜急停信号+		X29：22		√
		2		X11：16			变频柜急停信号-		X29：23		
1374	2*2*0.75	1-1	1#桩腿控制单元	X12：1		√	制动电阻温度S+(AI)		X1：201	1#桩腿制动电阻柜	√
		1-2		X12：2			制动电阻温度S-(AI)		X1：202		
		2-1		X12：3			制动电阻风压开关+		X1：101		
		2-2		X12：4			制动电阻风压开关-		X1：102		
119	2*1.5	1		X0:9		√	加热器电源 220V/50HZ/1PH		X1:L1		√
		2		X0:10			加热器电源 220V/50HZ/1PH		X1:N1		
115	5*1.5	1	1#桩腿控制单元	X0：19		√	电源箱风机接触器电源 220V ~		X0：1	电源箱	√
		2		X0：20			电源箱风机接触器电源 220V ~		X0：2		
		3		X12：7			电源箱风机控制信号 +		X0：3		
		4		X12：8			电源箱风机控制信号 -		X0：4		
1360	2*1.5	1		X16：9		√	电源箱风机合闸反馈+		X0：5		√
		2		X16：10			电源箱风机合闸反馈-		X0：6		

设计	
校对	
审核	
工艺	
标准	
批准	

标记	数量	修改单号	签字	日期
设计				
校核				
审核				
标检				
审定				
批准				

1320T电动齿轮齿条升降系统

电缆连接图

所属装配图号	0422PTS28A-1-03-00WG
图号	0422PTS28A-1-03-09WG
标记	S
版本	
重量	
比例	1:1
共 18 页	第 16 页

武汉船用机械有限责任公司

1407	3*16+3*4	1	1#桩腿变频器INU2 1.07	X1：U2		√	7#电机电源 U		U	1#柱腿 7#电机	√ 3根PE线和屏蔽层一起接地
		2		X1：V2			7#电机电源 V		V		
		3		X1：W2			7#电机电源 W		W		
		4					PE				
		5					PE				
		6					PE				
1408	3*16+3*4	1	1#桩腿变频器INU2 1.08	X1：U2		√	8#电机电源 U		U	1#柱腿 8#电机	√ 3根PE线和屏蔽层一起接地
		2		X1：V2			8#电机电源 V		V		
		3		X1：W2			8#电机电源 W		W		
		4					PE				
		5					PE				
		6					PE				
1409	3*16+3*4	1	1#桩腿变频器INU2 1.09	X1：U2		√	9#电机电源 U		U	1#柱腿 9#电机	√ 3根PE线和屏蔽层一起接地
		2		X1：V2			9#电机电源 V		V		
		3		X1：W2			9#电机电源 W		W		
		4					PE				
		5					PE				
		6					PE				
1410	3*16+3*4	1	1#桩腿变频器INU2 1.10	X1：U2		√	10#电机电源 U		U	1#柱腿 10#电机	√ 3根PE线和屏蔽层一起接地
		2		X1：V2			10#电机电源 V		V		
		3		X1：W2			10#电机电源 W		W		
		4					PE				
		5					PE				
		6					PE				
1411	3*16+3*4	1	1#桩腿变频器INU2 1.11	X1：U2		√	11#电机电源 U		U	1#柱腿 11#电机	√ 3根PE线和屏蔽层一起接地
		2		X1：V2			11#电机电源 V		V		
		3		X1：W2			11#电机电源 W		W		
		4					PE				
		5					PE				
		6					PE				
1412	3*16+3*4	1	1#桩腿变频器INU2 1.12	X1：U2		√	12#电机电源 U		U	1#柱腿 12#电机	√ 3根PE线和屏蔽层一起接地
		2		X1：V2			12#电机电源 V		V		
		3		X1：W2			12#电机电源 W		W		
		4					PE				
		5					PE				
		6					PE				

设计	
校对	
审核	
工艺	
标准	
批准	

标记	数量	修改单号	签字	日期
设计				
校核				
审核				
标检				
审定				
批准				

1320T电动齿轮齿条升降系统

电缆连接图

所属装配图号	0422PTS28A-1-03-00WG
图号	0422PTS28A-1-03-09WG
标记	S
版本	
重量	
比例	1:1
共 18 页	第 17 页

WMMP 武汉船用机械有限责任公司

1407	3*16+3*4	1	1#桩腿变频器INU2 1.07	X1：U2		√	7#电机电源 U		U	1#柱腿 7#电机	√ 3根PE线和屏蔽层一起接地
		2		X1：V2			7#电机电源 V		V		
		3		X1：W2			7#电机电源 W		W		
		4					PE				
		5					PE				
		6					PE				
1408	3*16+3*4	1	1#桩腿变频器INU2 1.08	X1：U2		√	8#电机电源 U		U	1#柱腿 8#电机	√ 3根PE线和屏蔽层一起接地
		2		X1：V2			8#电机电源 V		V		
		3		X1：W2			8#电机电源 W		W		
		4					PE				
		5					PE				
		6					PE				
1409	3*16+3*4	1	1#桩腿变频器INU2 1.09	X1：U2		√	9#电机电源 U		U	1#柱腿 9#电机	√ 3根PE线和屏蔽层一起接地
		2		X1：V2			9#电机电源 V		V		
		3		X1：W2			9#电机电源 W		W		
		4					PE				
		5					PE				
		6					PE				
1410	3*16+3*4	1	1#桩腿变频器INU2 1.10	X1：U2		√	10#电机电源 U		U	1#柱腿 10#电机	√ 3根PE线和屏蔽层一起接地
		2		X1：V2			10#电机电源 V		V		
		3		X1：W2			10#电机电源 W		W		
		4					PE				
		5					PE				
		6					PE				
1411	3*16+3*4	1	1#桩腿变频器INU2 1.11	X1：U2		√	11#电机电源 U		U	1#柱腿 11#电机	√ 3根PE线和屏蔽层一起接地
		2		X1：V2			11#电机电源 V		V		
		3		X1：W2			11#电机电源 W		W		
		4					PE				
		5					PE				
		6					PE				
1412	3*16+3*4	1	1#桩腿变频器INU2 1.12	X1：U2		√	12#电机电源 U		U	1#柱腿 12#电机	√ 3根PE线和屏蔽层一起接地
		2		X1：V2			12#电机电源 V		V		
		3		X1：W2			12#电机电源 W		W		
		4					PE				
		5					PE				
		6					PE				

设计	
校对	
审核	
工艺	
标准	
批准	

标记	数量	修改单号	签字	日期
设计				
校核				
审核				
标检				
审定				
批准				

1320T电动齿轮齿条升降系统

电缆连接图

所属装配图号	0422PTS28A-1-03-00WG
图号	0422PTS28A-1-03-09WG
标记 S	版本
重量	比例 1:1
共 18 页	第 18 页

武汉船用机械有限责任公司

0422PTS28A-1-03-10WG

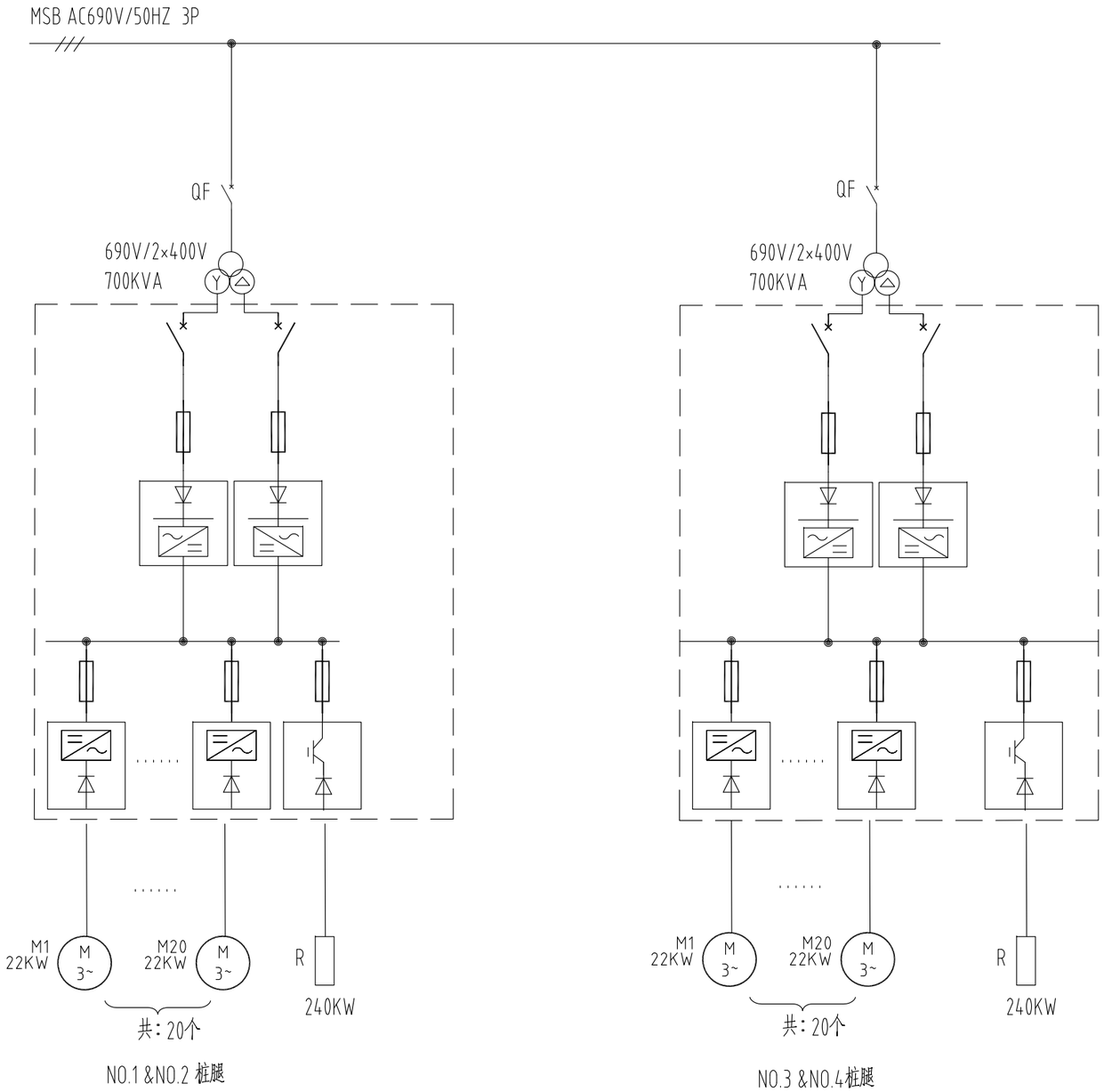

设计	
校对	
审核	
工艺	
标准	
批准	

标记	数量	修改单号	签字	日期

设计	
校核	
审核	
标检	
审定	
批准	

1320T电动齿轮齿条升降系统

电气单线图

所属装配图号	0422PTS28A-1-03-00WG
图号	0422PTS28A-1-03-10WG

标记	版本	重量	比例
S			1:1

共 2 页 第 1 页

武汉船用机械有限责任公司

0422PTS28A-1-03-10WG

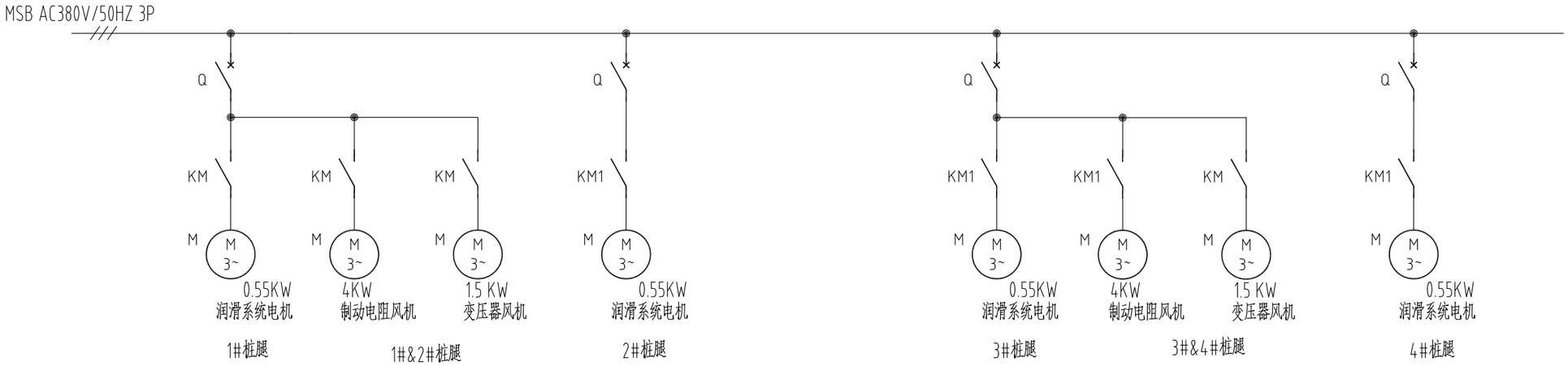

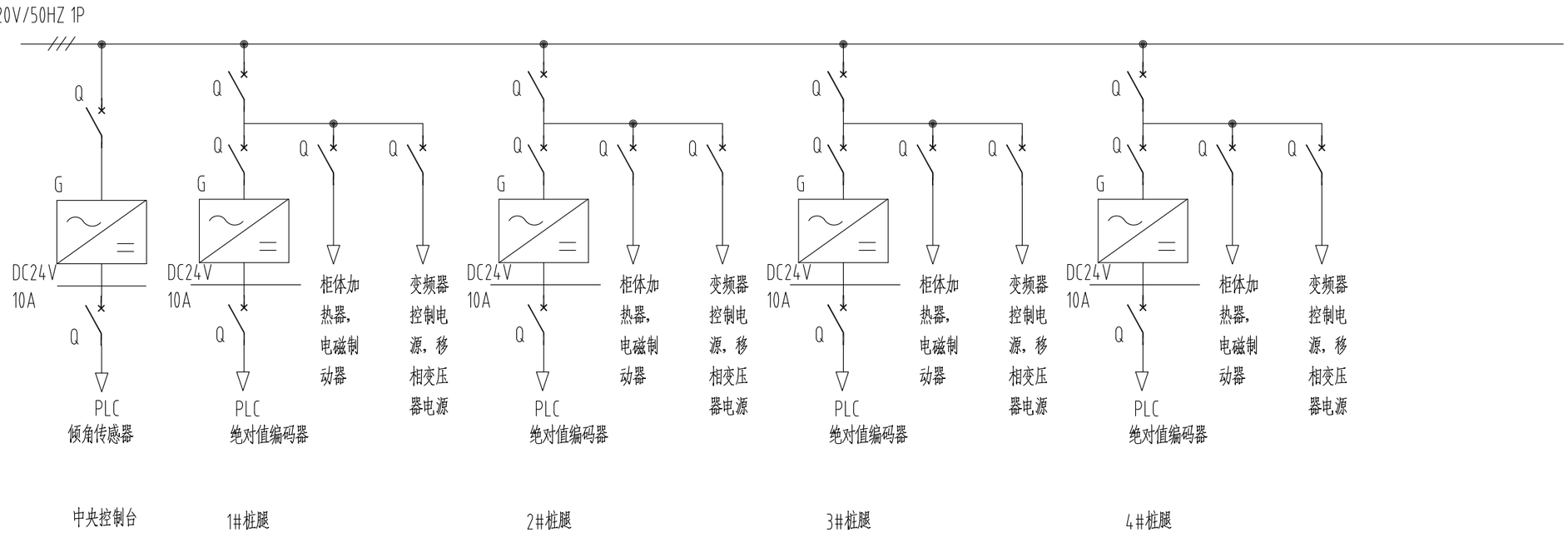

设计					1320T电动齿轮齿条升降系统	所属装配图号	0422PTS28A-1-03-00WG	
校对								
审核								
工艺					电气单线图	图号	0422PTS28A-1-03-10WG	
标准		标记	数量	修改单号	签字	日期	标记 / 版本	重量 / 比例
批准		设计					S	1:1
		校核					共 2 页	第 2 页
		审核						
		标检					武汉船用机械有限责任公司	
		审定						
		批准						

0422PTS28A-1-03-12WG

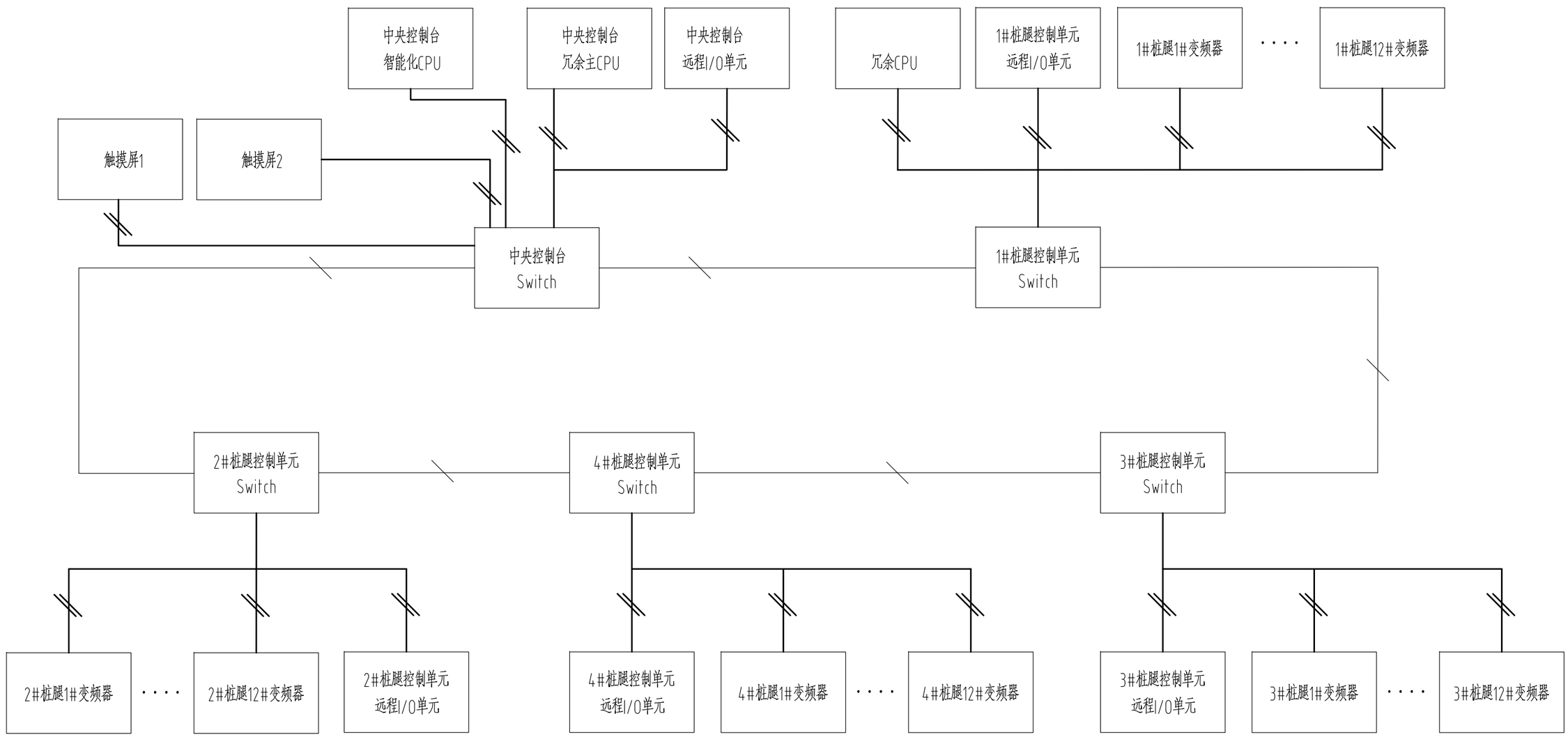

Profinet

多模光纤 fiber

设计	
校对	
审核	
工艺	
标准	
批准	

标记	数量	修改单号	签字	日期

设计		
校核		
审核		
标检		
审定		
批准		

1320T电动齿轮齿条升降系统

控制系统网络拓扑图

所属装配图号	0422PTS28A-1-03-00WG
图号	0422PTS28A-1-03-12WG

标记	版本	重量	比例
S			1:1

共 1 页 第 1 页

WMMP 武汉船用机械有限责任公司

0422PTS28A-1-03-11100WG

主视图

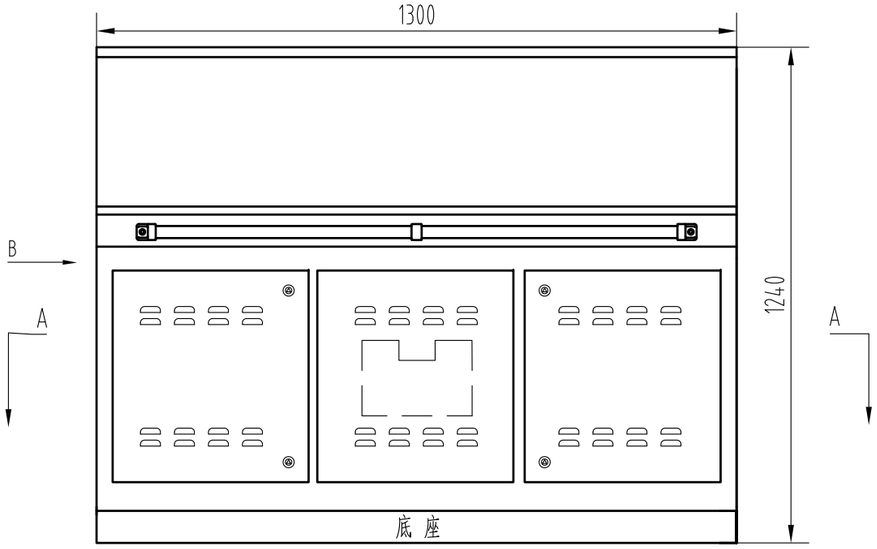

B视图

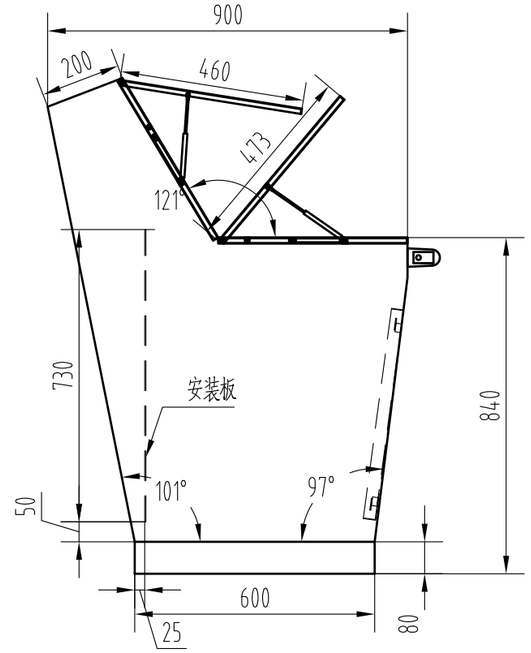

A-A

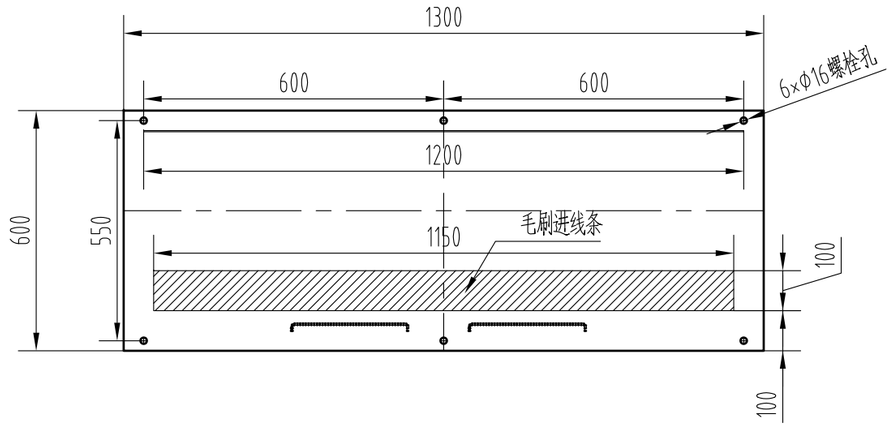

倾角传感器支架

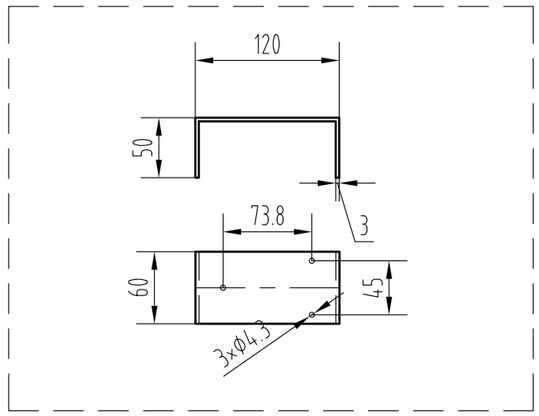

防护等级：IP23
颜色：RAL7035
重量：350KG
进线方式：底部进线
注：烦请船厂在操作台底部区域制作一个右上图所示的倾角传感器支架。

					1320T电动齿轮齿条升降系统	所属装配图号	0422PTS28A-1-03-00WG	
标记	数量	修改单号	签字	日期	集中控制台	图号	0422PTS28A-1-03-11100WG	
设计						标记	版本	重量	比例
校核						S			1:15
审核						共 2 页		第 1 页	
标检									
审定									
批准									

武汉船用机械有限责任公司

0422PTS28A-1-03-11100WG

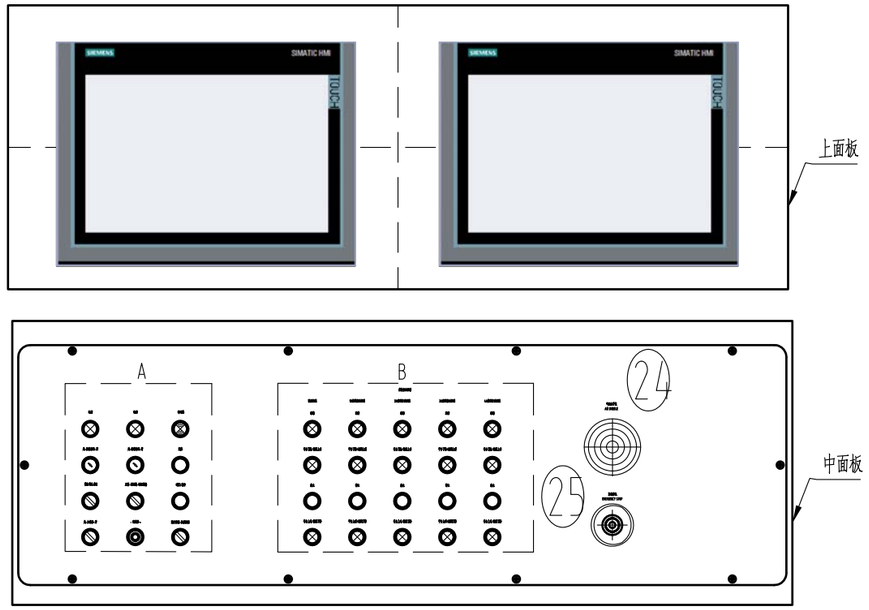

A 比例 1:2 23

升降综合控制
JACKING GENERAL CONTROL

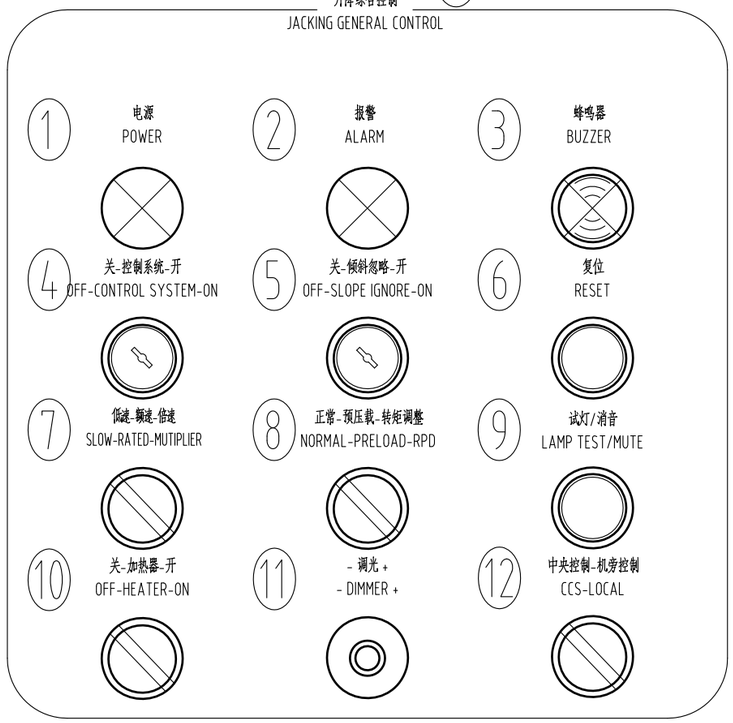

B 比例 1:2 22

升降自动控制
AUTO. CONTROL

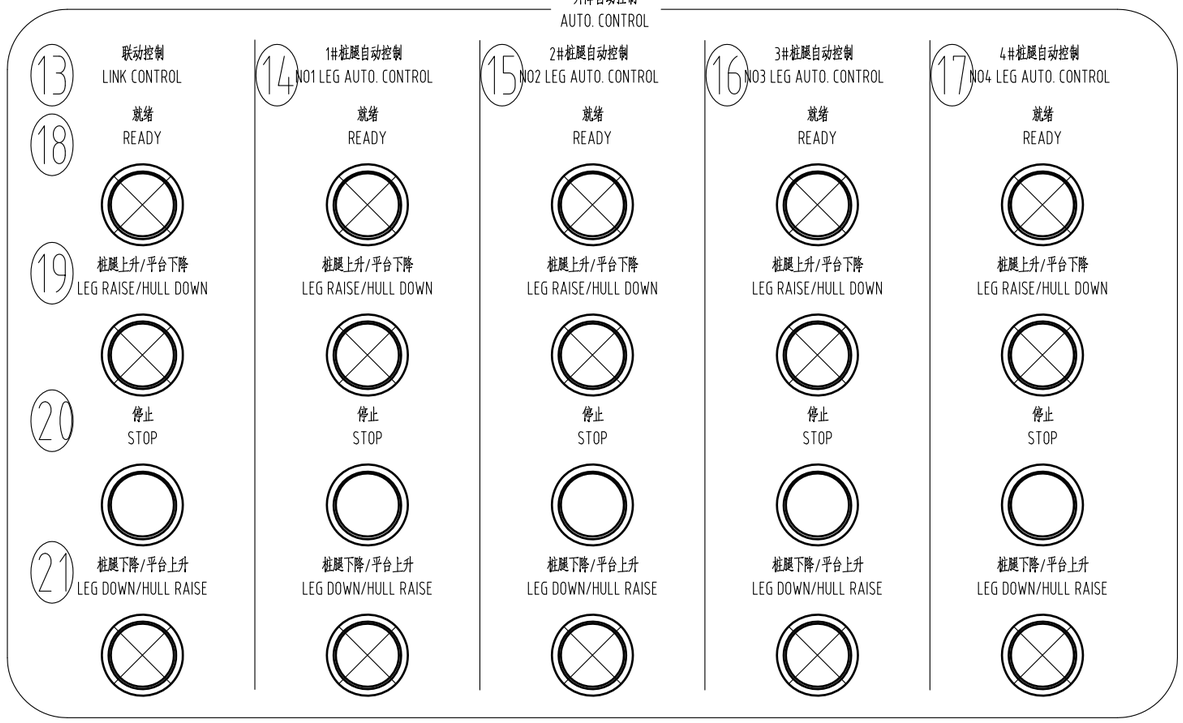

序号	内容	序号	内容
1	电源 POWER	14	1#桩腿自动控制 NO1 LEG AUTO. CONTROL
2	报警 ALARM	15	2#桩腿自动控制 NO2 LEG AUTO. CONTROL
3	蜂鸣器 BUZZER	16	3#桩腿自动控制 NO3 LEG AUTO. CONTROL
4	关-控制系统-开 OFF-CONTROL SYSTEM-ON	17	4#桩腿自动控制 NO4 LEG AUTO. CONTROL
5	关-倾斜忽略-开 OFF-SLOPE IGNORE-ON	18	就绪 READY
6	复位 RESET	19	桩腿上升/平台下降 LEG RAISE/HULL DOWN
7	低速-额速-倍速 SLOW-RATED-MUTIPLIER	20	停止 STOP
8	正常-预压载-转矩调整 NORMAL-PRELOAD-RETORQUE	21	桩腿下降/平台上升 LEG DOWN/HULL RAISE
9	试灯/消音 LAMP TEST/MUTE	22	升降自动控制 AUTO. CONTROL
10	关-加热器-开 OFF-HEATER-ON	23	升降综合控制 JACKING GENERAL CONTROL
11	- 调光 + - DIMMER +	24	气泡水平仪 AIR BUBBLE
12	驾驶室控制-机旁控制 CCS-LOCAL	25	紧急停机 EMERGENCY STOP
13	联动控制 LINK CONTROL		

设计	
校对	
审核	
工艺	
标准	
批准	

标记	数量	修改单号	签字	日期

设计		
校核		
审核		
标检		
审定		
批准		

1320T电动齿轮齿条升降系统

集中控制台

所属装配图号	0422PTS28A-1-03-00WG
图号	0422PTS28A-1-03-11100WG

标记	版本	重量	比例
S			1:10

共 2 页 第 2 页

武汉船用机械有限责任公司

0422PTS28A-1-03-11101WG

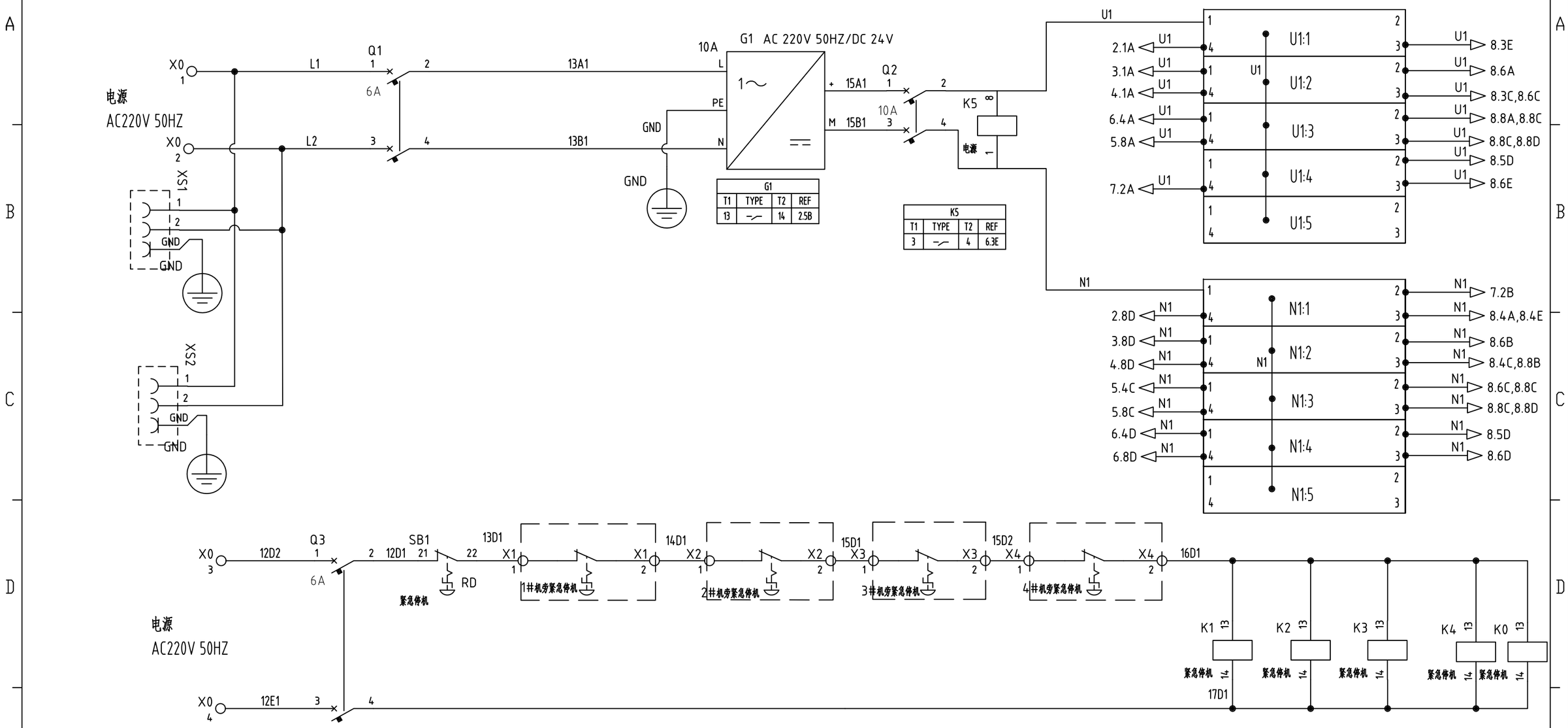

G1			
T1	TYPE	T2	REF
13		14	2.5B

K5			
T1	TYPE	T2	REF
3		4	6.3E

K1			
T1	TYPE	T2	REF
11		3	8.1B
9		5	8.1A
10		6	8.1A
12		8	8.1B

K2			
T1	TYPE	T2	REF
11		3	8.1C
9		5	8.1B
10		6	8.1C
12		8	8.1C

K3			
T1	TYPE	T2	REF
11		3	8.1D
9		5	8.1D
10		6	8.1D
12		8	8.1E

K4			
T1	TYPE	T2	REF
11		3	8.1F
9		5	8.1E
10		6	8.1E
12		8	8.1F

K0			
T1	TYPE	T2	REF
9		1	2.1B

技术要求：

1、PLC模块用0.5mm²的线，其余电气元件用1.0mm²的线；

2、虚线框内的元件不在本柜体内。

设计	
校对	
审核	
工艺	
标准	
批准	

标记	数量	修改单号	签字	日期
设计				
校核				
审核				
标检				
审定				
批准				

1320T电动齿轮齿条升降系统

集中控制台原理图

所属装配图号	0422PTS28A-1-03-11100WG
图号	0422PTS28A-1-03-11101WG

标记	版本	重量	比例
S			1:1

共 8 页 第 1 页

武汉船用机械有限责任公司

0422PTS28A-1-03-11101WG

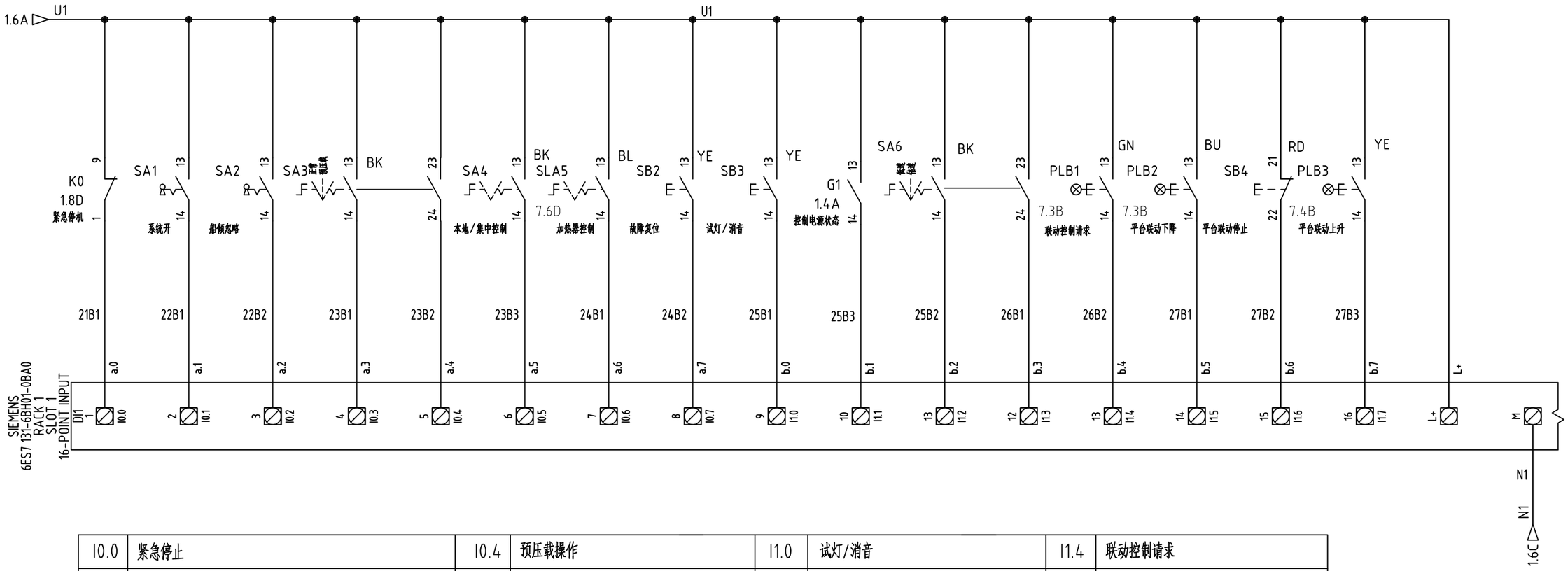

I0.0	紧急停止	I0.4	预压载操作	I1.0	试灯/消音	I1.4	联动控制请求
I0.1	关-系统-开	I0.5	本地控制-集中控制	I1.1	控制电源状态	I1.5	平台联动下降
I0.2	关-船倾忽略-开	I0.6	关-空间加热器-开	I1.2	低速	I1.6	平台联动停止
I0.3	正常升降操作	I0.7	故障复位	I1.3	倍速	I1.7	平台联动上升

技术要求：

1、PLC模块用0.5mm²的线，其余电气元件用1.0mm²的线；

2、虚线框内的元件不在本柜体内。

设计	
校对	
审核	
工艺	
标准	
批准	

标记	数量	修改单号	签字	日期
设计				
校核				
审核				
标检				
审定				
批准				

1320T电动齿轮齿条升降系统

集中控制台原理图

所属装配图号	0422PTS28A-1-03-11100WG
图号	0422PTS28A-1-03-11101WG

标记	版本	重量	比例
S			1:1

共 8 页 第 2 页

武汉船用机械有限责任公司

0422PTS28A-1-03-11101WG

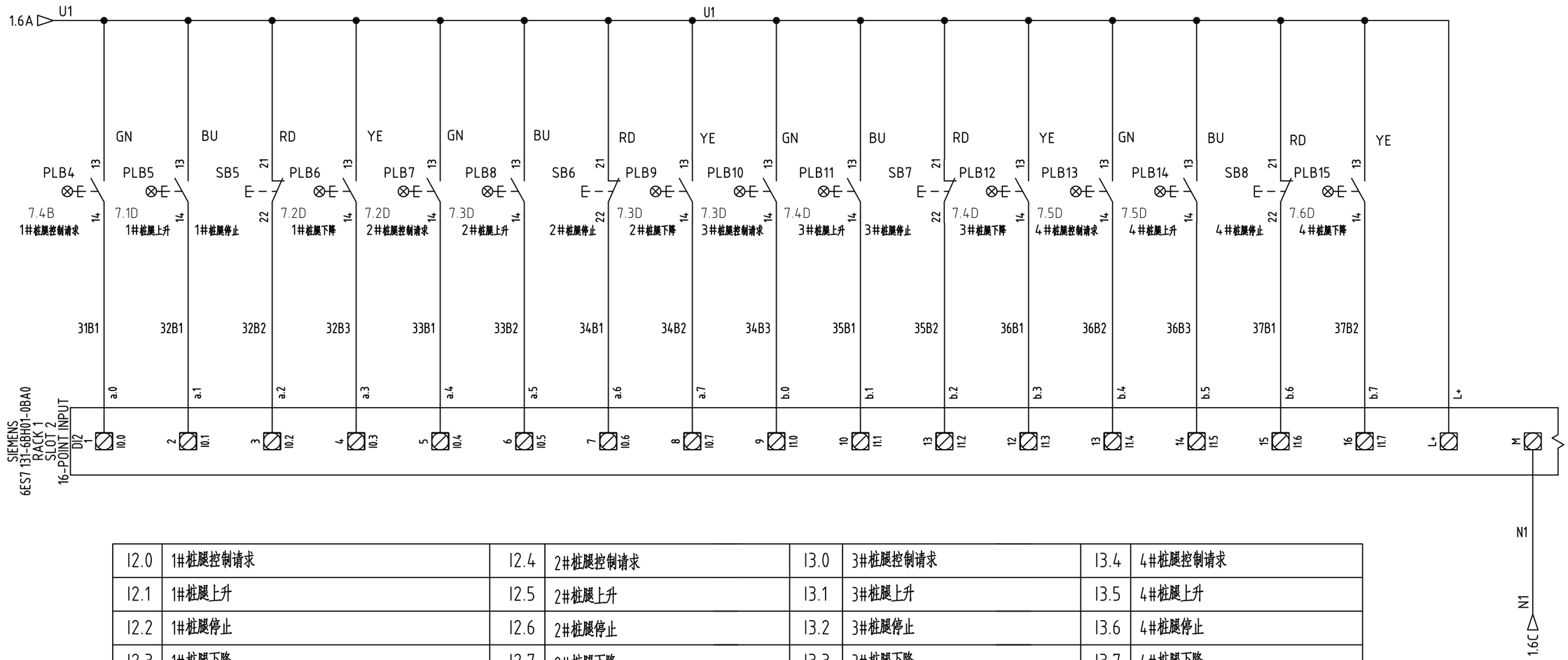

I2.0	1#桩腿控制请求	I2.4	2#桩腿控制请求	I3.0	3#桩腿控制请求	I3.4	4#桩腿控制请求
I2.1	1#桩腿上升	I2.5	2#桩腿上升	I3.1	3#桩腿上升	I3.5	4#桩腿上升
I2.2	1#桩腿停止	I2.6	2#桩腿停止	I3.2	3#桩腿停止	I3.6	4#桩腿停止
I2.3	1#桩腿下降	I2.7	2#桩腿下降	I3.3	3#桩腿下降	I3.7	4#桩腿下降

技术要求：

1、PLC模块用0.5mm²的线，其余电气元件用1.0mm²的线；

2、虚线框内的元件不在本柜体内。

设计	
校对	
审核	
工艺	
标准	
批准	

标记	数量	修改单号	签字	日期
设计				
校核				
审核				
标检				
审定				
批准				

1320T电动齿轮齿条升降系统

集中控制台原理图

所属装配图号	0422PTS28A-1-03-11100WG
图号	0422PTS28A-1-03-11101WG

标记	版本	重量	比例
S			1:1

共 8 页 第 3 页

武汉船用机械有限责任公司

0422PTS28A-1-03-11101WG

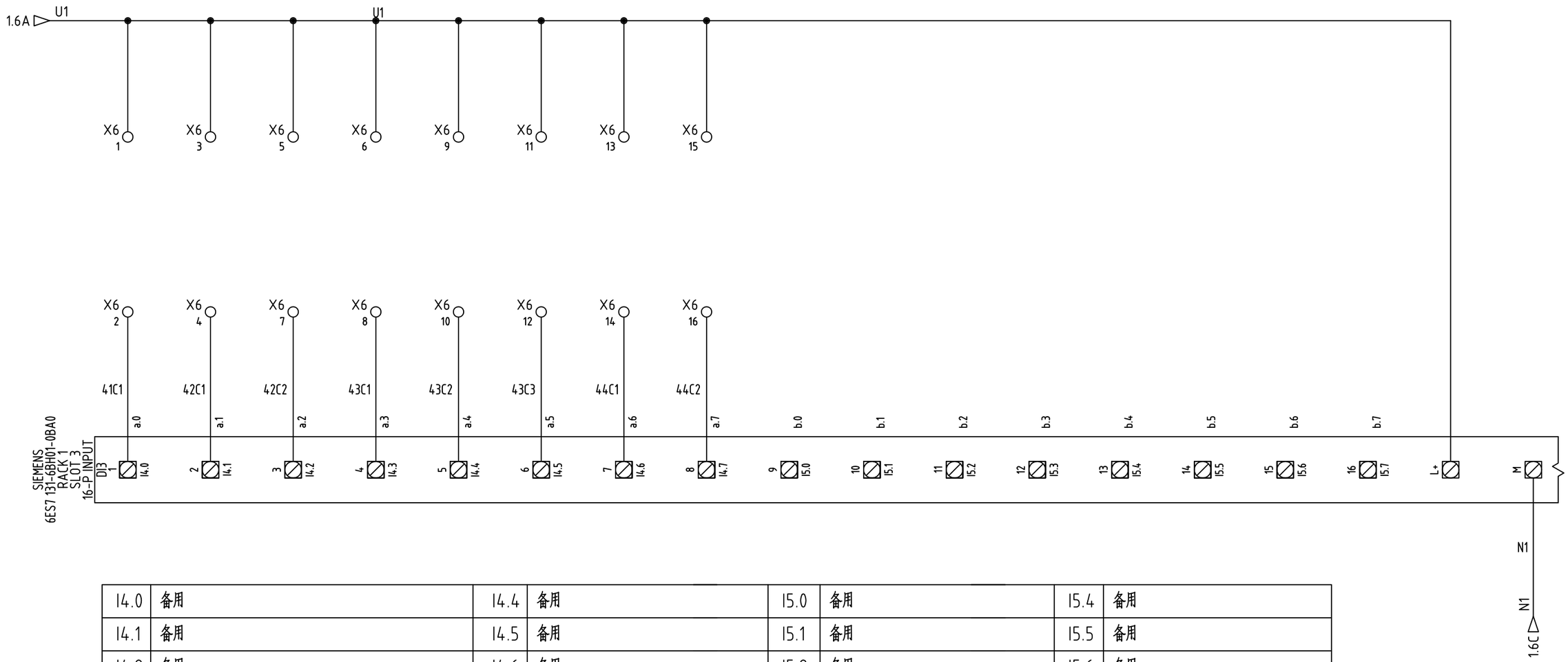

I4.0	备用	I4.4	备用	I5.0	备用	I5.4	备用
I4.1	备用	I4.5	备用	I5.1	备用	I5.5	备用
I4.2	备用	I4.6	备用	I5.2	备用	I5.6	备用
I4.3	备用	I4.7	备用	I5.3	备用	I5.7	备用

技术要求：

1、PLC模块用0.5mm²的线，其余电气元件用1.0mm²的线；

2、虚线框内的元件不在本柜体内.

设计	
校对	
审核	
工艺	
标准	
批准	

标记	数量	修改单号	签字	日期
设计				
校核				
审核				
标检				
审定				
批准				

1320T电动齿轮齿条升降系统

集中控制台原理图

所属装配图号	0422PTS28A-1-03-11100WG
图号	0422PTS28A-1-03-11101WG

标记	版本	重量	比例
S			1:1

共 8 页 第 4 页

武汉船用机械有限责任公司

0422PTS28A-1-03-11101WG

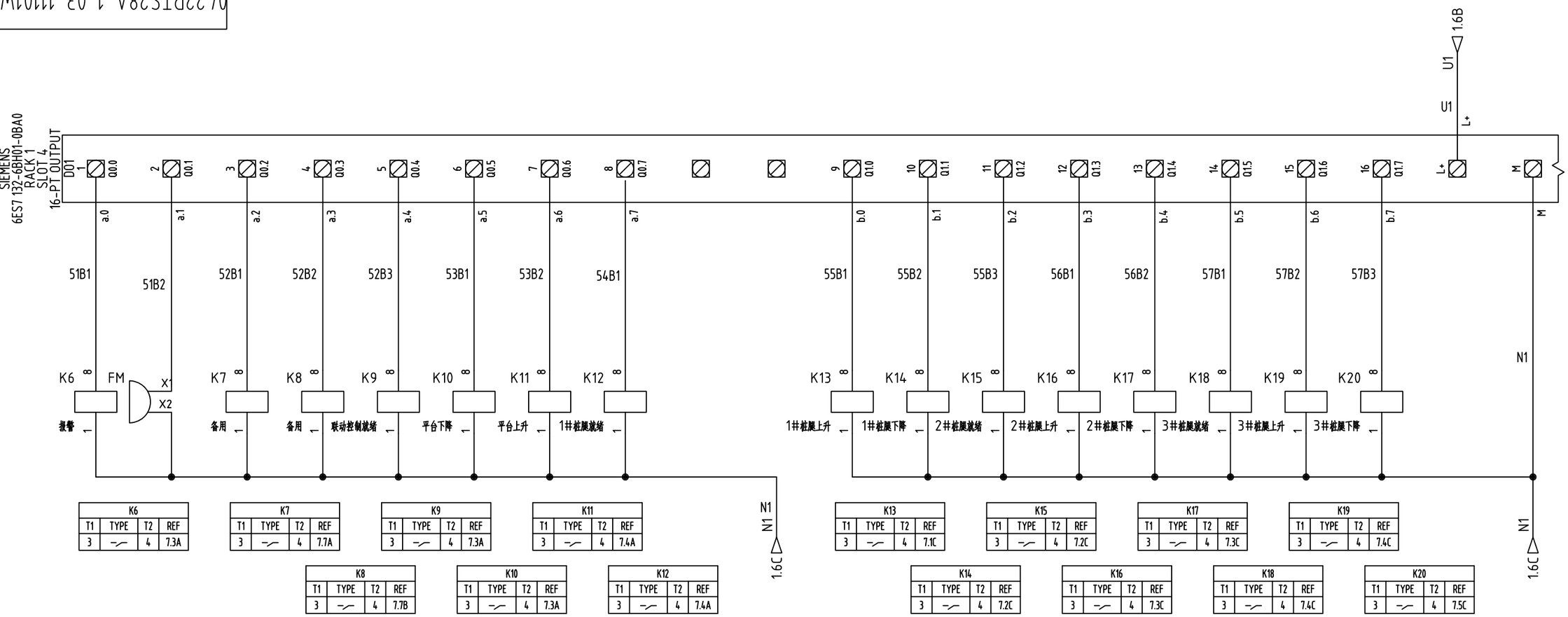

K6			
T1	TYPE	T2	REF
3	—/—	4	7.3A

K7			
T1	TYPE	T2	REF
3	—/—	4	7.7A

K9			
T1	TYPE	T2	REF
3	—/—	4	7.3A

K11			
T1	TYPE	T2	REF
3	—/—	4	7.4A

K13			
T1	TYPE	T2	REF
3	—/—	4	7.1C

K15			
T1	TYPE	T2	REF
3	—/—	4	7.2C

K17			
T1	TYPE	T2	REF
3	—/—	4	7.3C

K19			
T1	TYPE	T2	REF
3	—/—	4	7.4C

K8			
T1	TYPE	T2	REF
3	—/—	4	7.7B

K10			
T1	TYPE	T2	REF
3	—/—	4	7.3A

K12			
T1	TYPE	T2	REF
3	—/—	4	7.4A

K14			
T1	TYPE	T2	REF
3	—/—	4	7.2C

K16			
T1	TYPE	T2	REF
3	—/—	4	7.3C

K18			
T1	TYPE	T2	REF
3	—/—	4	7.4C

K20			
T1	TYPE	T2	REF
3	—/—	4	7.5C

Q0.0	报警指示灯	Q0.4	联动控制就绪
Q0.1	蜂鸣器	Q0.5	平台下降
Q0.2	备用	Q0.6	平台上升
Q0.3	备用	Q0.7	1#桩腿就绪

Q1.0	1#桩腿上升	Q1.4	2#桩腿下降
Q1.1	1#桩腿下降	Q1.5	3#桩腿就绪
Q1.2	2#桩腿就绪	Q1.6	3#桩腿上升
Q1.3	2#桩腿上升	Q1.7	3#桩腿下降

技术要求：

1、PLC模块用0.5mm²的线，其余电气元件用1.0mm²的线；

2、虚线框内的元件不在本柜体内。

设计	
校对	
审核	
工艺	
标准	
批准	

标记	数量	修改单号	签字	日期
设计				
校核				
审核				
标检				
审定				
批准				

1320T电动齿轮齿条升降系统

集中控制台原理图

所属装配图号	0422PTS28A-1-03-11100WG
图号	0422PTS28A-1-03-11101WG

标记	版本	重量	比例
S			1:1

共 8 页 第 5 页

武汉船用机械有限责任公司

0422PTS28A-1-03-11101WG

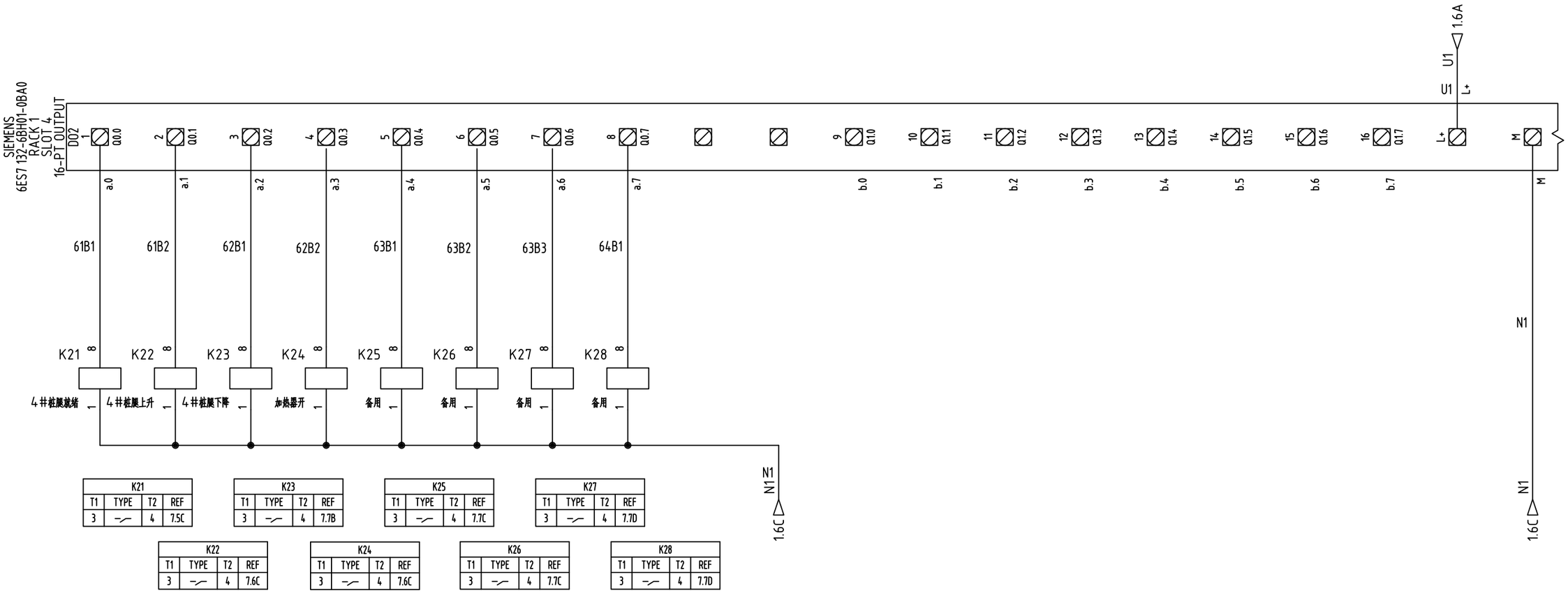

K21			
T1	TYPE	T2	REF
3		4	7.5C

K23			
T1	TYPE	T2	REF
3		4	7.7B

K25			
T1	TYPE	T2	REF
3		4	7.7C

K27			
T1	TYPE	T2	REF
3		4	7.7D

K22			
T1	TYPE	T2	REF
3		4	7.6C

K24			
T1	TYPE	T2	REF
3		4	7.6C

K26			
T1	TYPE	T2	REF
3		4	7.7C

K28			
T1	TYPE	T2	REF
3		4	7.7D

Q2.0	4#桩腿就绪	Q2.4	备用
Q2.1	4#桩腿上升	Q2.5	备用
Q2.2	4#桩腿下降	Q2.6	备用
Q2.3	备用	Q2.7	备用

Q3.0	备用	Q3.4	备用
Q3.1	备用	Q3.5	备用
Q3.2	备用	Q3.6	备用
Q3.3	备用	Q3.7	备用

技术要求：

1、PLC模块用0.5mm²的线，其余电气元件用1.0mm²的线；

2、虚线框内的元件不在本柜体内。

设计	
校对	
审核	
工艺	
标准	
批准	

标记	数量	修改单号	签字	日期
设计				
校核				
审核				
标检				
审定				
批准				

1320T电动齿轮齿条升降系统

集中控制台原理图

所属装配图号	0422PTS28A-1-03-11100WG
图号	0422PTS28A-1-03-11101WG
标记	S
版本	
重量	
比例	1:1
共 8 页	第 6 页

武汉船用机械有限责任公司

0422PTS28A-1-03-11101WG

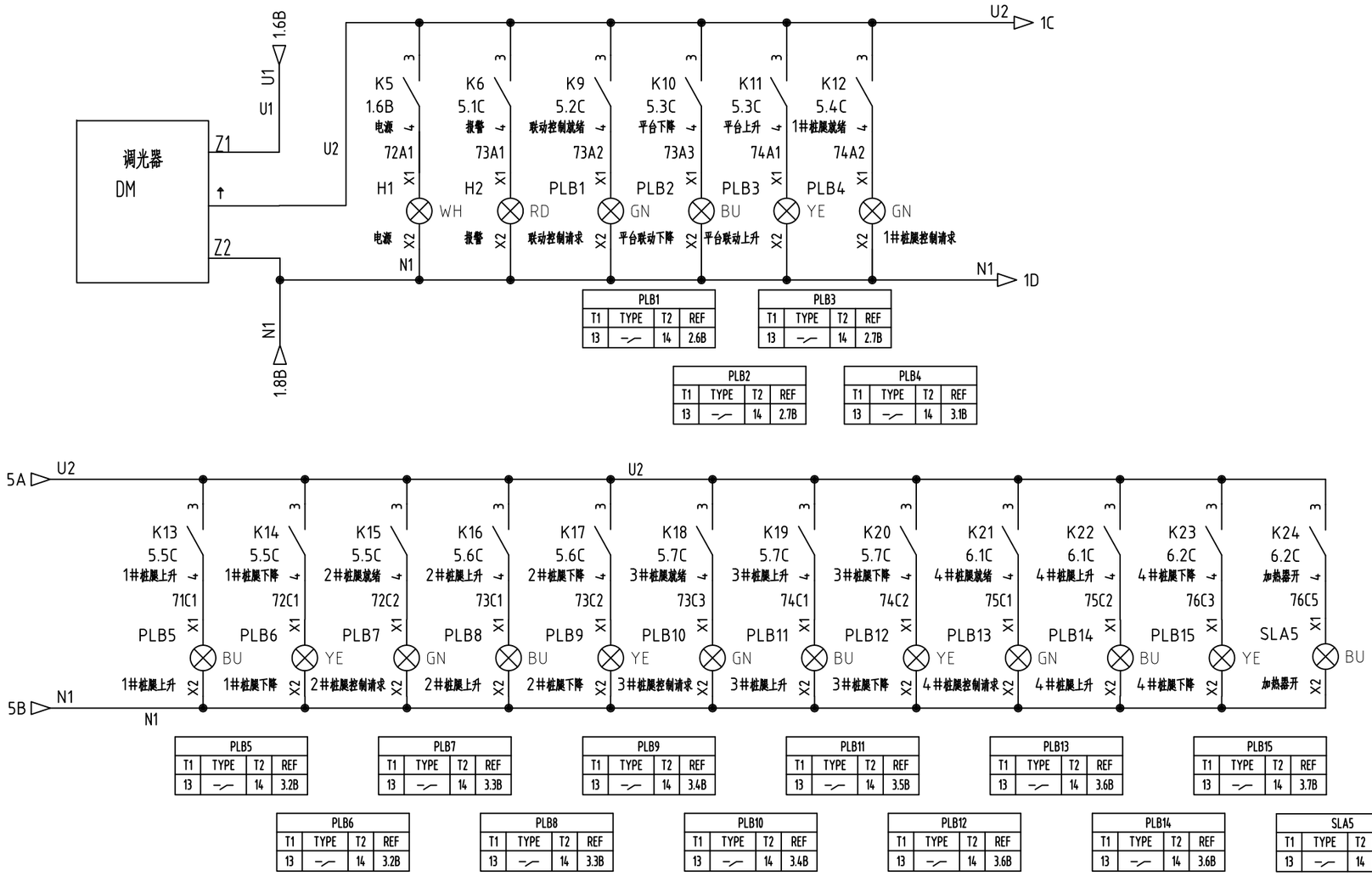

PLB1			
T1	TYPE	T2	REF
13		14	2.6B

PLB3			
T1	TYPE	T2	REF
13		14	2.7B

PLB2			
T1	TYPE	T2	REF
13		14	2.7B

PLB4			
T1	TYPE	T2	REF
13		14	3.1B

PLB5			
T1	TYPE	T2	REF
13		14	3.2B

PLB7			
T1	TYPE	T2	REF
13		14	3.3B

PLB9			
T1	TYPE	T2	REF
13		14	3.4B

PLB11			
T1	TYPE	T2	REF
13		14	3.5B

PLB13			
T1	TYPE	T2	REF
13		14	3.6B

PLB15			
T1	TYPE	T2	REF
13		14	3.7B

PLB6			
T1	TYPE	T2	REF
13		14	3.2B

PLB8			
T1	TYPE	T2	REF
13		14	3.3B

PLB10			
T1	TYPE	T2	REF
13		14	3.4B

PLB12			
T1	TYPE	T2	REF
13		14	3.6B

PLB14			
T1	TYPE	T2	REF
13		14	3.6B

SLA5			
T1	TYPE	T2	REF
13		14	2.4B

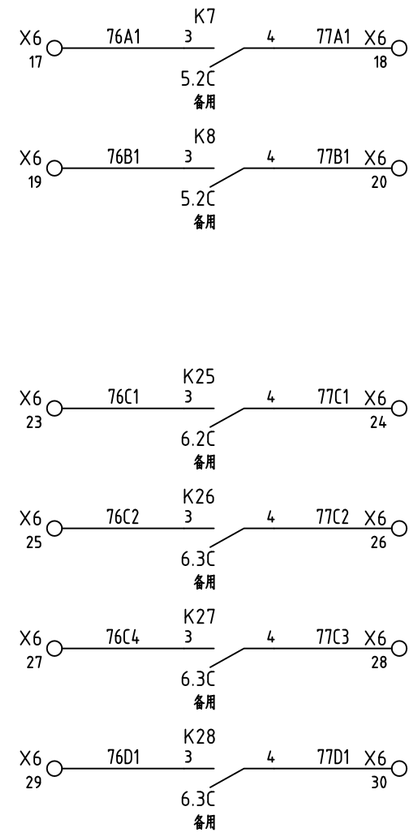

技术要求：

1、PLC模块用0.5mm²的线，其余电气元件用1.0mm²的线；

2、虚线框内的元件不在本柜体内。

设计	
校对	
审核	
工艺	
标准	
批准	

标记	数量	修改单号	签字	日期
设计				
校核				
审核				
标检				
审定				
批准				

1320T电动齿轮齿条升降系统

集中控制台原理图

所属装配图号	0422PTS28A-1-03-11100WG
图号	0422PTS28A-1-03-11101WG

标记	版本	重量	比例
S			1:1

共 8 页 第 7 页

武汉船用机械有限责任公司

0422PTS28A-1-03-11101WG

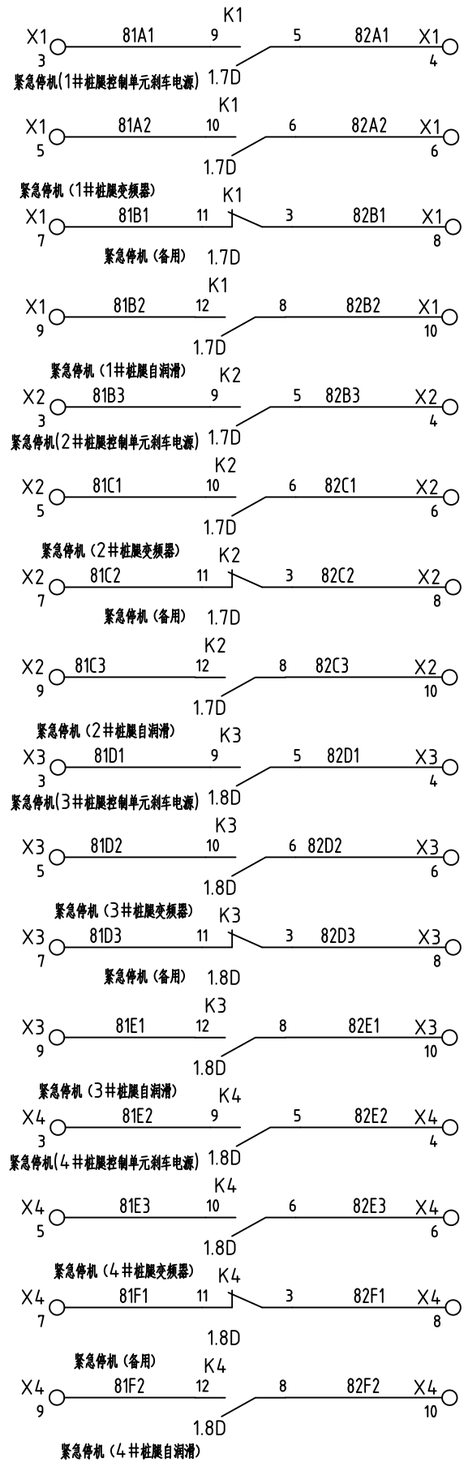

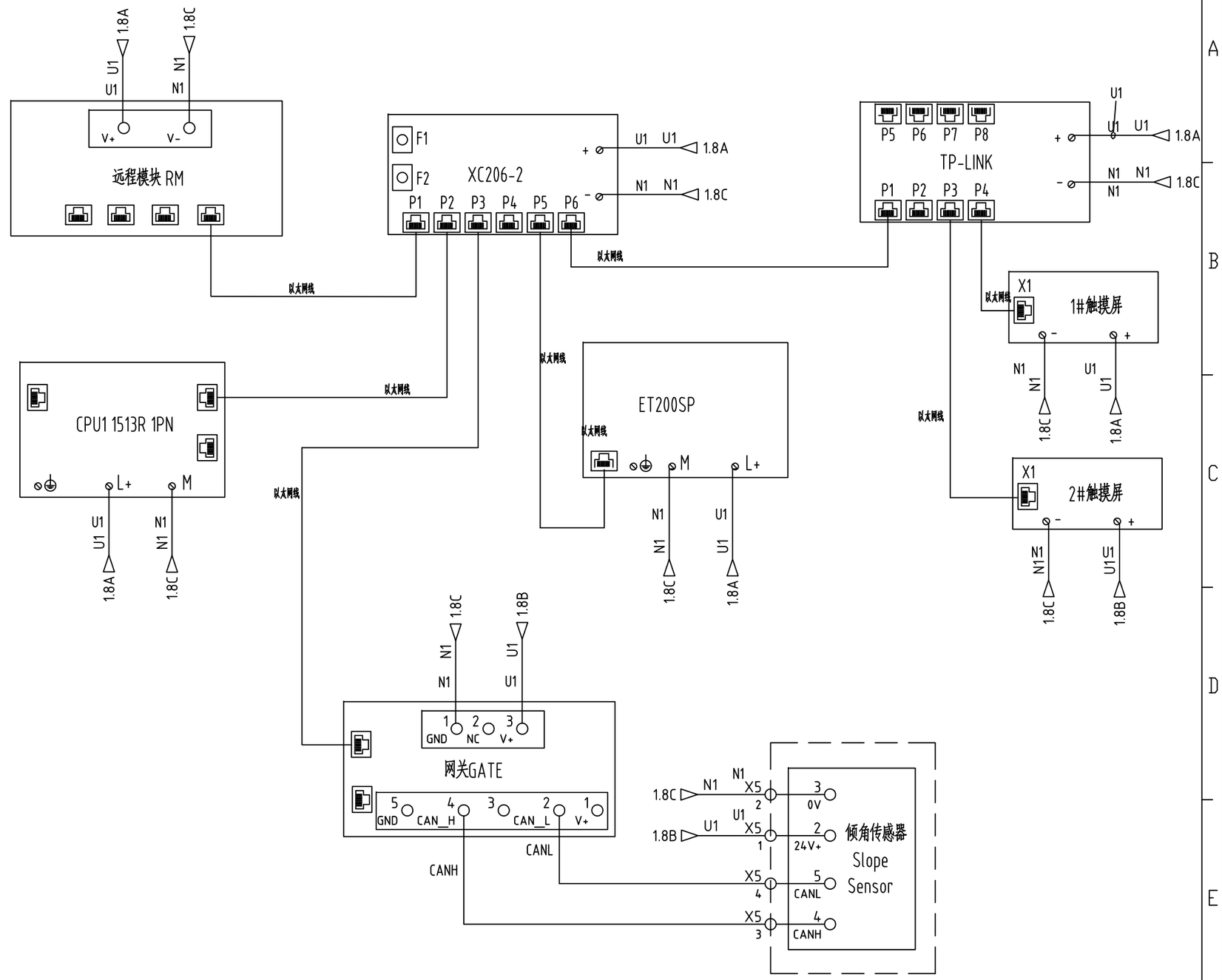

技术要求：

1、PLC模块用0.5mm²的线，其余电气元件用1.0mm²的线；

2、虚线框内的元件不在本柜体内。

设计						
校对						
审核						
工艺						
标准						
批准						

标记	数量	修改单号	签字	日期
设计				
校核				
审核				
标检				
审定				
批准				

1320T电动齿轮齿条升降系统

集中控制台原理图

所属装配图号	0422PTS28A-1-03-11100WG
图号	0422PTS28A-1-03-11101WG
标记	S
版本	
重量	
比例	1:1
共 8 页	第 8 页

武汉船用机械有限责任公司

0422PTS28A-1-03-11200WG

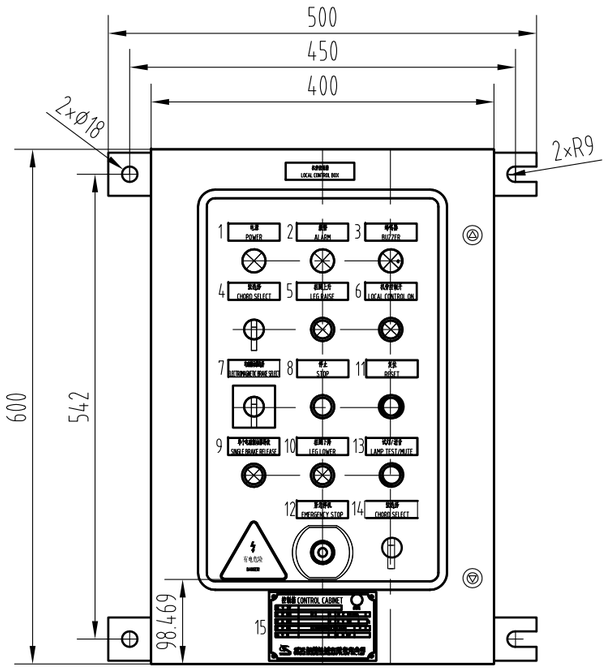

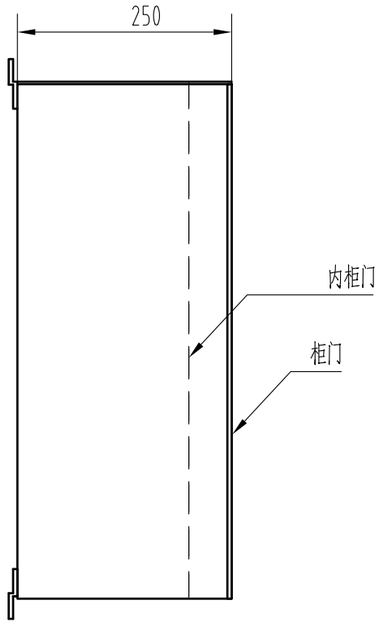

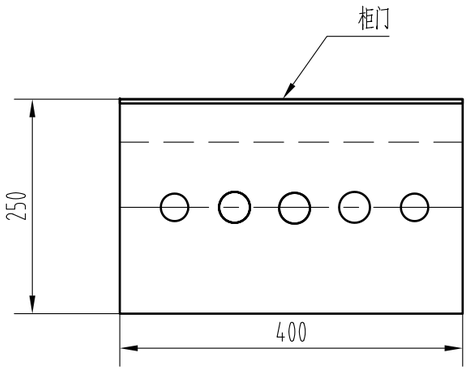

序号	内容
1	电源POWER
2	报警ALARM
3	蜂鸣器BUZZER
4	弦选择CHORD SELECT
5	桩腿上升/平台下降LEG RAISE/HULL LOWER
6	机旁控制开/关 LOCAL CONTROL ON/OFF
7	电磁制动器选择ELECTROMAGNETIC BRAKE SELECT
8	停止STOP
9	单个电磁制动器释放SINGLE BRAKE RELEASE
10	桩腿下降/平台上升LEG LOWER/HULL RAISE
11	复位RESET
12	紧急停机EMERGENCY STOP
13	试灯/消音LAMP TEST/MUTE
14	关-应急控制-开 OFF-EMER. CTRL-ON

材质：不锈钢
防护等级：IP56
重量：25KG
进线方式：填料函进线

设计	
校对	
审核	
工艺	
标准	
批准	

标记	数量	修改单号	签字	日期

设计		
校核		
审核		
标检		
审定		
批准		

1320T电动齿轮齿条升降系统

机旁控制箱

所属装配图号	0422PTS28A-1-03-00WG
图号	0422PTS28A-1-03-11200WG

标记	版本	重量	比例
S			1:7

共 1 页 第 1 页

WMMIP 武汉船用机械有限责任公司

0422PTS28A-1-03-11201WG

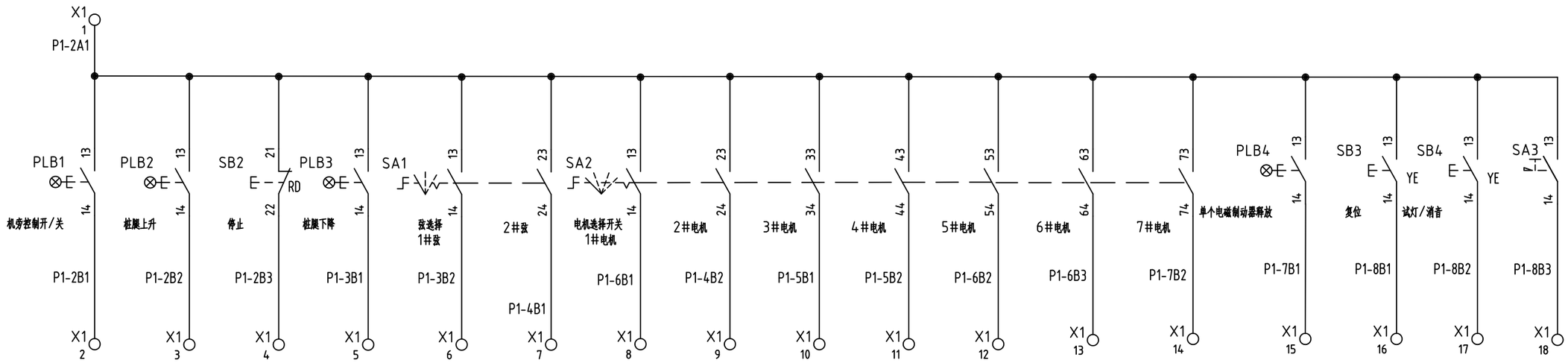

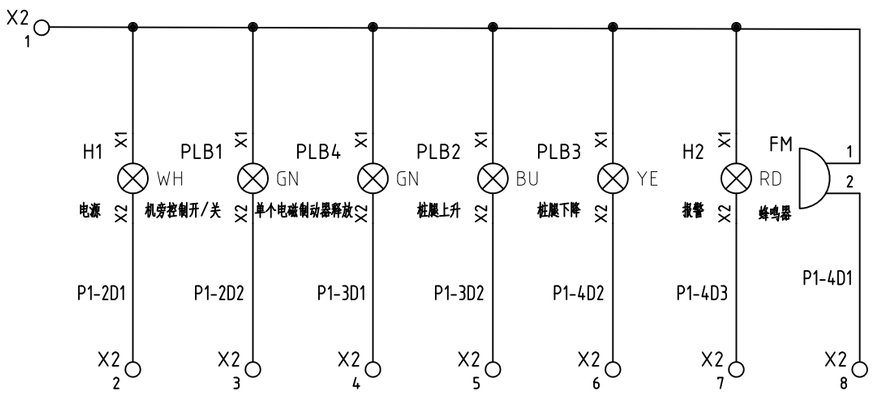

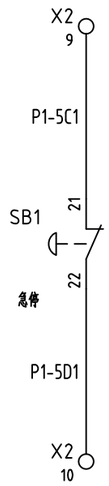

技术要求：

1、未标注的线径用1.0mm²的线。

设计	
校对	
审核	
工艺	
标准	
批准	

标记	数量	修改单号	签字	日期
设计				
校核				
审核				
标检				
审定				
批准				

1320T电动齿轮齿条升降系统

机旁控制箱原理图

所属装配图号	0422PTS28A-1-03-11200WG
图号	0422PTS28A-1-03-11201WG

标记	版本	重量	比例
S			1:1

共 1 页 第 1 页

武汉船用机械有限责任公司

0422PTS28A-1-03-12100WG

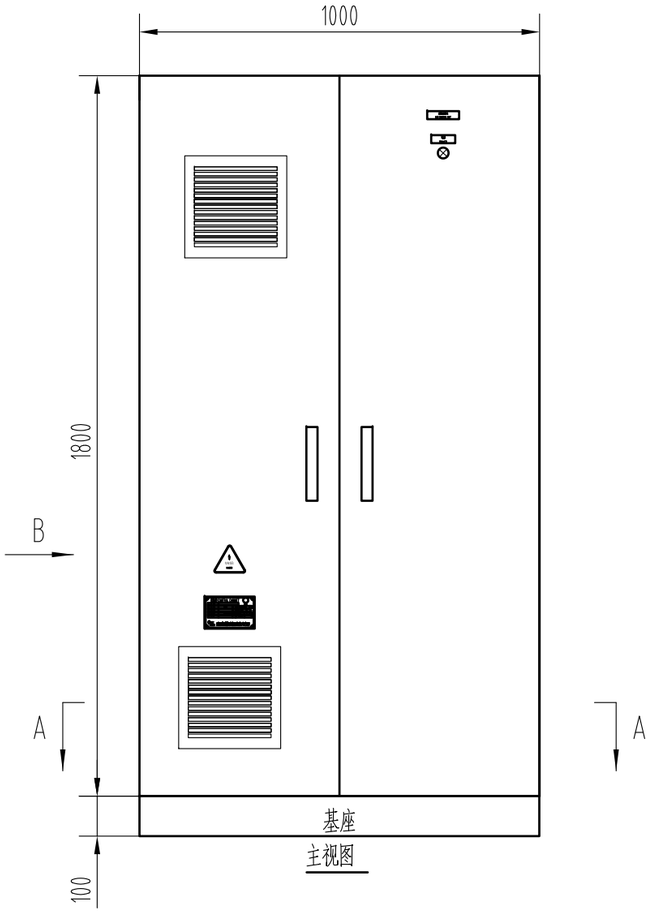

主视图

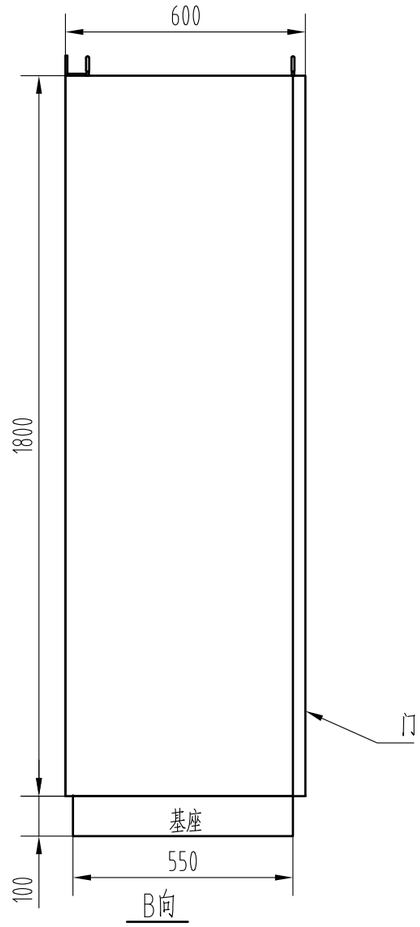

B向

防护等级: IP22
颜色: RAL 7035
重量: 250KG
电缆进线方式: 底部毛刷进线

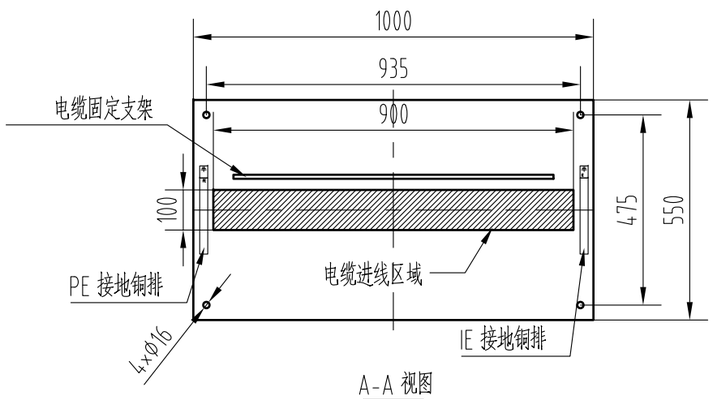

A-A 视图

设计	
校对	
审核	
工艺	
标准	
批准	

标记	数量	修改单号	签字	日期
设计				
校核				
审核				
标检				
审定				
批准				

1320T电动齿轮齿条升降系统

桩腿控制单元

所属装配图号	0422PTS28A-1-03-00WG
图号	0422PTS28A-1-03-12100WG
标记	S
版本	
重量	
比例	1:15
共 1 页	第 1 页

WMMP 武汉船用机械有限责任公司

0422PTS28A-1-03-12101WG

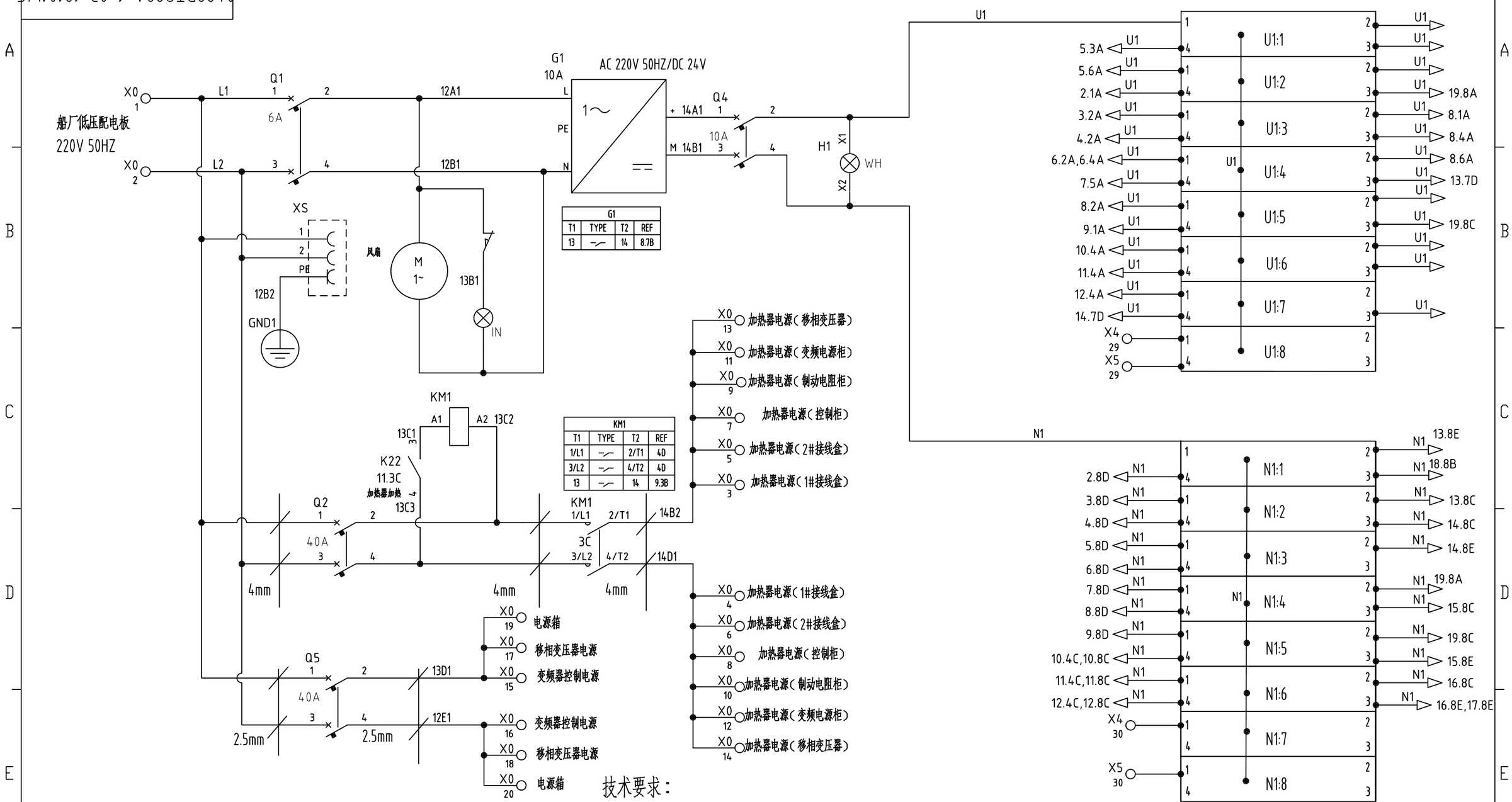

技术要求：

1、PLC模块用0.5mm²的线，已标注线径的按标注线径接线（同一支路不重复标注），未标注的用1.0mm²的线；

2、虚线框内设备不在此控制箱内。

设计	
校对	
审核	
工艺	
标准	
批准	

标记	数量	修改单号	签字	日期
设计				
校核				
审核				
标检				
审定				
批准				

1320T电动齿轮齿条升降系统

桩腿控制单元原理图

所属装配图号	0422PTS28A-1-03-12100WG
图号	0422PTS28A-1-03-12101WG
标记	S
版本	
重量	
比例	1:1
共 18 页	第 1 页

武汉船用机械有限责任公司

0422PTS28A-1-03-12101WG

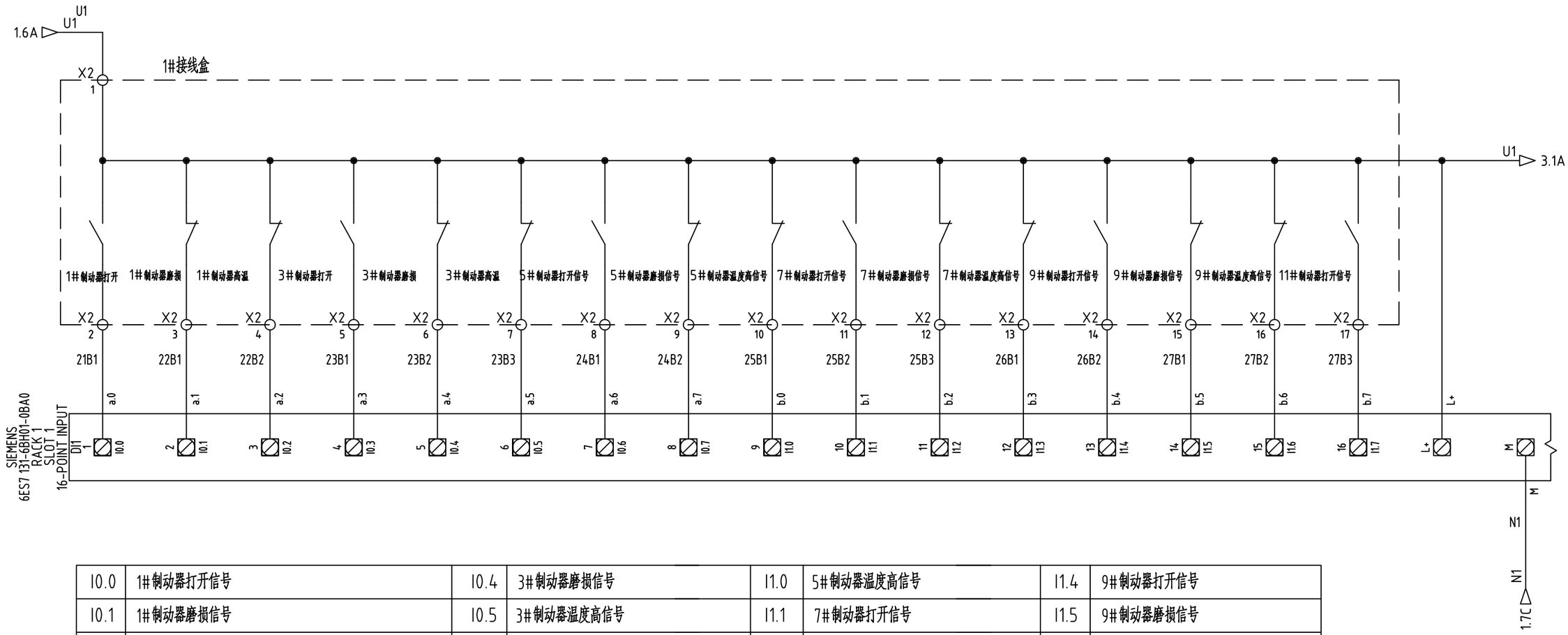

I0.0	1#制动器打开信号	I0.4	3#制动器磨损信号	I1.0	5#制动器温度高信号	I1.4	9#制动器打开信号
I0.1	1#制动器磨损信号	I0.5	3#制动器温度高信号	I1.1	7#制动器打开信号	I1.5	9#制动器磨损信号
I0.2	1#制动器温度高信号	I0.6	5#制动器打开信号	I1.2	7#制动器磨损信号	I1.6	9#制动器温度高信号
I0.3	3#制动器打开信号	I0.7	5#制动器磨损信号	I1.3	7#制动器温度高信号	I1.7	11#制动器打开信号

技术要求：

1、PLC模块用0.5mm²的线，已标注线径的按标注线径接线（同一支路不重复标注），未标注的用1.0mm²的线；

2、虚线框内设备不在此控制箱内。

设计	
校对	
审核	
工艺	
标准	
批准	

标记	数量	修改单号	签字	日期
设计				
校核				
审核				
标检				
审定				
批准				

1320T电动齿轮齿条升降系统

桩腿控制单元原理图

所属装配图号	0422PTS28A-1-03-12100WG
图号	0422PTS28A-1-03-12101WG
标记	S
版本	
重量	
比例	1:1
共 18 页	第 2 页

武汉船用机械有限责任公司

0422PTS28A-1-03-12101WG

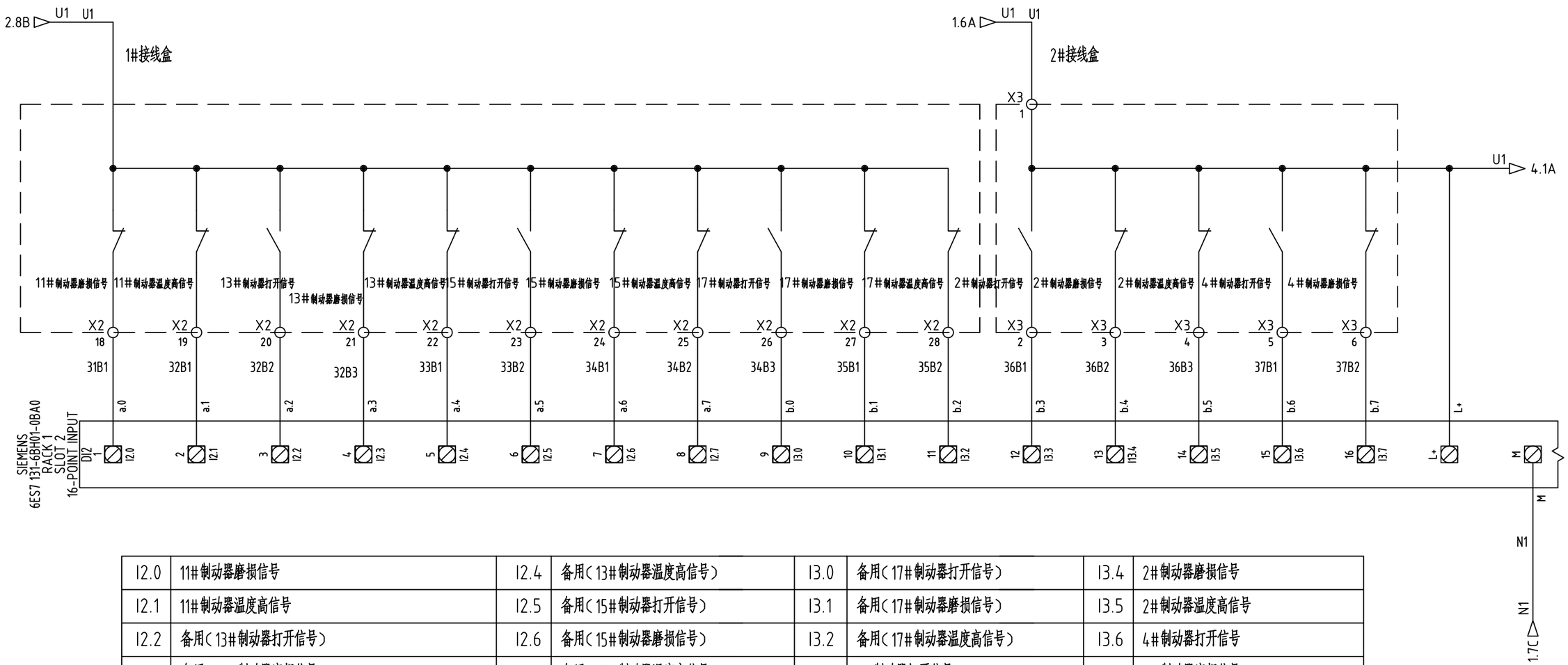

I2.0	11#制动器磨损信号	I2.4	备用（13#制动器温度高信号）	I3.0	备用（17#制动器打开信号）	I3.4	2#制动器磨损信号
I2.1	11#制动器温度高信号	I2.5	备用（15#制动器打开信号）	I3.1	备用（17#制动器磨损信号）	I3.5	2#制动器温度高信号
I2.2	备用（13#制动器打开信号）	I2.6	备用（15#制动器磨损信号）	I3.2	备用（17#制动器温度高信号）	I3.6	4#制动器打开信号
I2.3	备用（13#制动器磨损信号）	I2.7	备用（15#制动器温度高信号）	I3.3	2#制动器打开信号	I3.7	4#制动器磨损信号

技术要求：

1、PLC模块用0.5mm^{2}的线，已标注线径的按标注线径接线（同一支路不重复标注），未标注的用1.0mm^{2}的线；

2、虚线框内设备不在此控制箱内。

设计	
校对	
审核	
工艺	
标准	
批准	

标记	数量	修改单号	签字	日期
设计				
校核				
审核				
标检				
审定				
批准				

1320T电动齿轮齿条升降系统

桩腿控制单元原理图

所属装配图号	0422PTS28A-1-03-12100WG
图号	0422PTS28A-1-03-12101WG
标记 S	版本
重量	比例 1:1
共 18 页	第 3 页

WMMP 武汉船用机械有限责任公司

0422PTS28A-1-03-12101WG

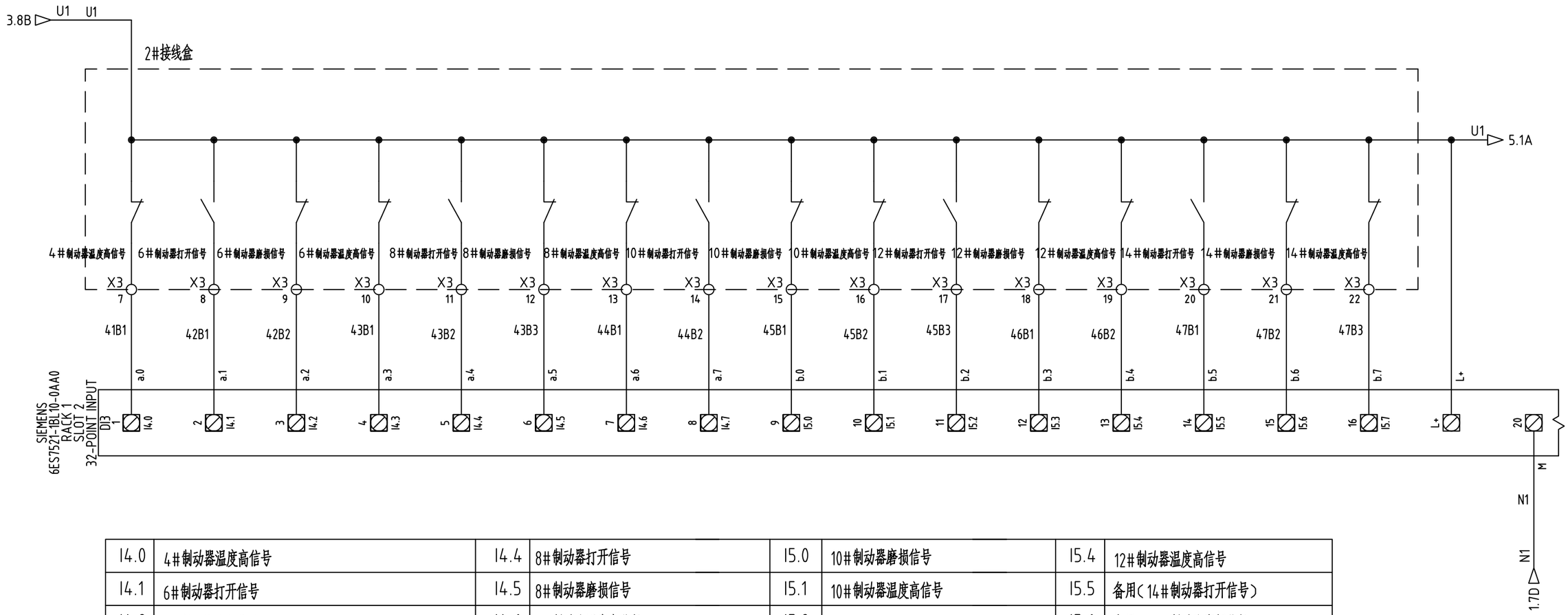

I4.0	4#制动器温度高信号	I4.4	8#制动器打开信号	I5.0	10#制动器磨损信号	I5.4	12#制动器温度高信号
I4.1	6#制动器打开信号	I4.5	8#制动器磨损信号	I5.1	10#制动器温度高信号	I5.5	备用（14#制动器打开信号）
I4.2	6#制动器磨损信号	I4.6	8#制动器温度高信号	I5.2	12#制动器打开信号	I5.6	备用（14#制动器磨损信号）
I4.3	6#制动器温度高信号	I4.7	10#制动器打开信号	I5.3	12#制动器磨损信号	I5.7	备用（14#制动器温度高信号）

技术要求：

1、PLC模块用0.5mm²的线，已标注线径的按标注线径接线（同一支路不重复标注），未标注的用1.0mm²的线；

2、虚线框内设备不在此控制箱内。

设计	
校对	
审核	
工艺	
标准	
批准	

标记	数量	修改单号	签字	日期
设计				
校核				
审核				
标检				
审定				
批准				

1320T电动齿轮齿条升降系统

桩腿控制单元原理图

所属装配图号	0422PTS28A-1-03-12100WG
图号	0422PTS28A-1-03-12101WG

标记	版本	重量	比例
S			1:1

共 18 页 第 4 页

武汉船用机械有限责任公司

0422PTS28A-1-03-12101WG

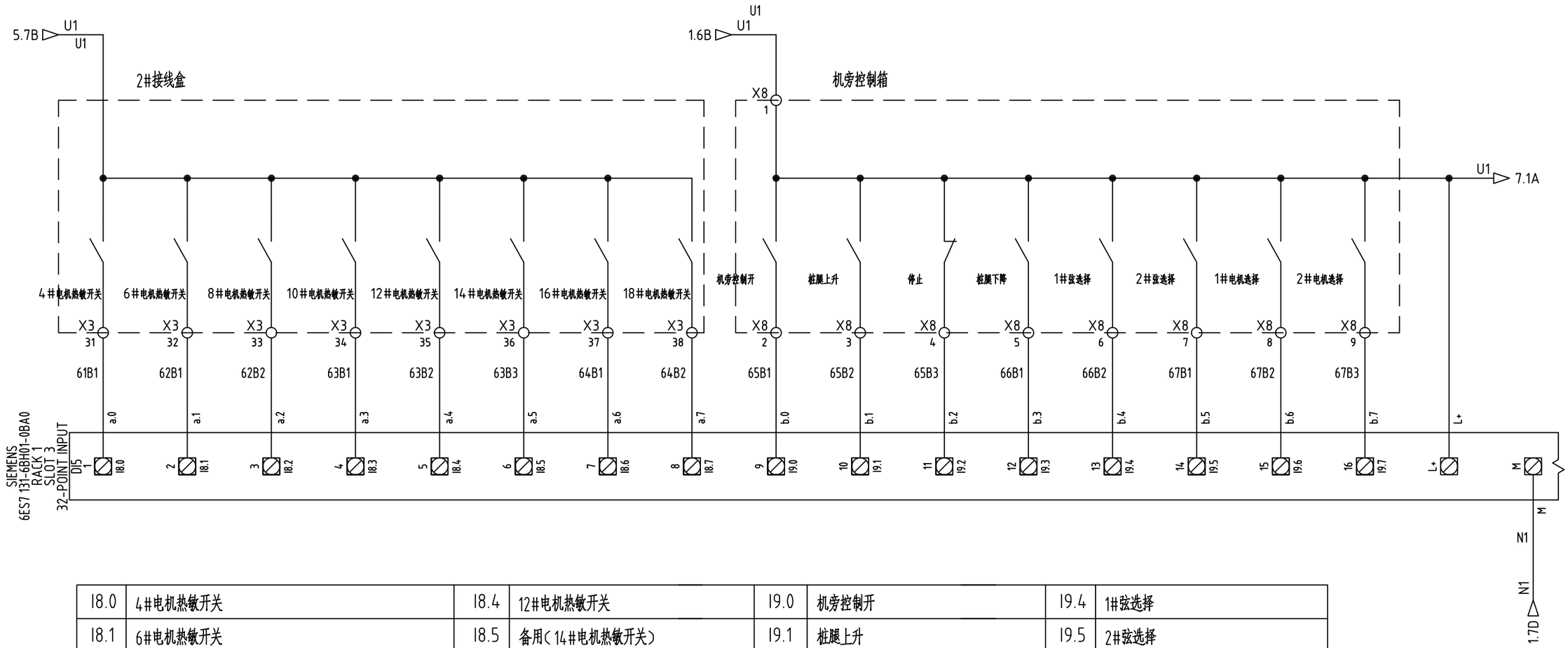

I8.0	4#电机热敏开关	I8.4	12#电机热敏开关	I9.0	机旁控制开	I9.4	1#弦选择
I8.1	6#电机热敏开关	I8.5	备用（14#电机热敏开关）	I9.1	桩腿上升	I9.5	2#弦选择
I8.2	8#电机热敏开关	I8.6	备用（16#电机热敏开关）	I9.2	停止	I9.6	1#电机选择
I8.3	10#电机热敏开关	I8.7	备用（18#电机热敏开关）	I9.3	桩腿下降	I9.7	2#电机选择

技术要求：

1、PLC模块用0.5mm²的线，已标注线径的按标注线径接线（同一支路不重复标注），未标注的用1.0mm²的线；

2、虚线框内设备不在此控制箱内。

设计	
校对	
审核	
工艺	
标准	
批准	

标记	数量	修改单号	签字	日期
设计				
校核				
审核				
标检				
审定				
批准				

1320T电动齿轮齿条升降系统

桩腿控制单元原理图

所属装配图号	0422PTS28A-1-03-12100WG
图号	0422PTS28A-1-03-12101WG
标记 S	版本
重量	比例 1:1
共 18 页	第 6 页

WUXIMP 武汉船用机械有限责任公司

0422PTS28A-1-03-12101WG

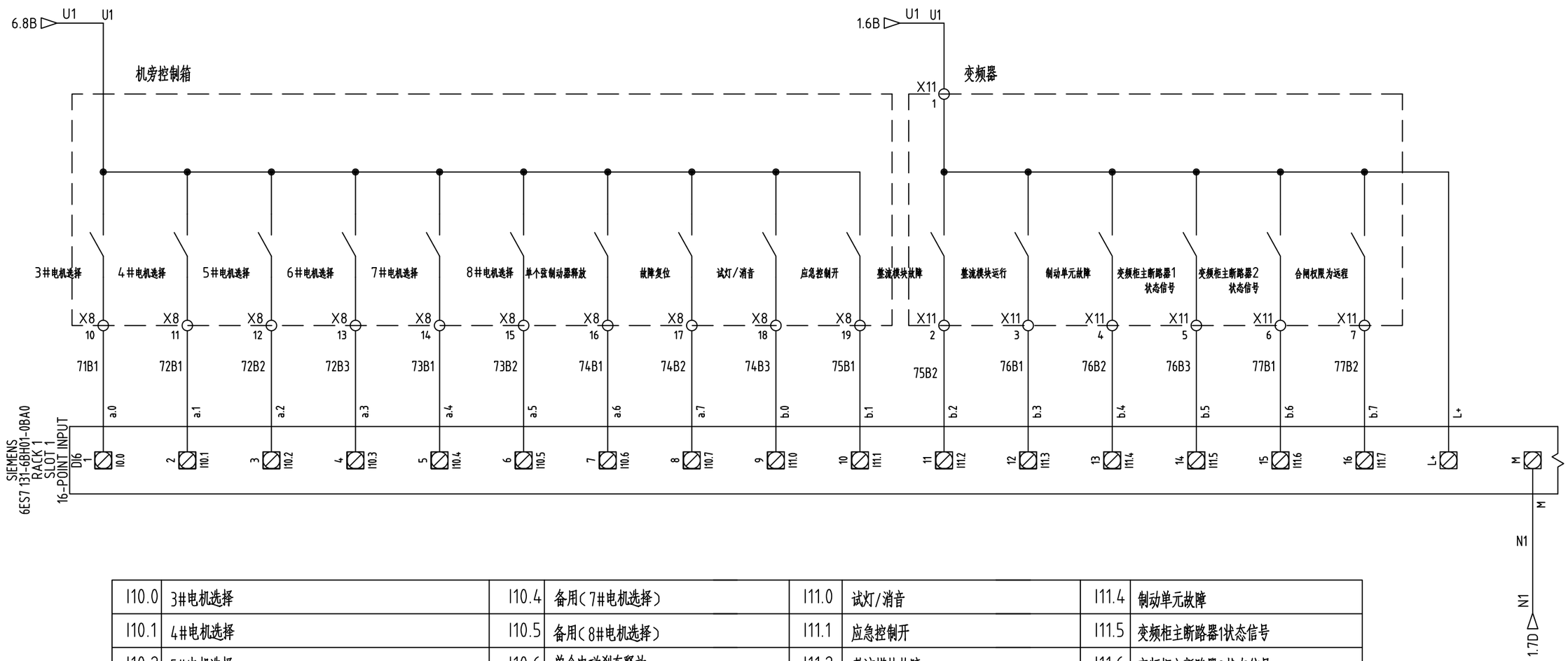

I10.0	3#电机选择	I10.4	备用(7#电机选择)	I11.0	试灯/消音	I11.4	制动单元故障
I10.1	4#电机选择	I10.5	备用(8#电机选择)	I11.1	应急控制开	I11.5	变频柜主断路器1状态信号
I10.2	5#电机选择	I10.6	单个电磁刹车释放	I11.2	整流模块故障	I11.6	变频柜主断路器2状态信号
I10.3	6#电机选择	I10.7	故障复位	I11.3	整流模块运行	I11.7	变频柜合闸权限为远程

技术要求：

1、PLC模块用0.5mm²的线，已标注线径的按标注线径接线(同一支路不重复标注)，未标注的用1.0mm²的线；

2、虚线框内设备不在此控制箱内。

设计	
校对	
审核	
工艺	
标准	
批准	

标记	数量	修改单号	签字	日期
设计				
校核				
审核				
标检				
审定				
批准				

1320T电动齿轮齿条升降系统

桩腿控制单元原理图

所属装配图号	0422PTS28A-1-03-12100WG
图号	0422PTS28A-1-03-12101WG
标记	S
版本	
重量	
比例	1:1
共 18 页	第 7 页

武汉船用机械有限责任公司

0422PTS28A-1-03-12101WG

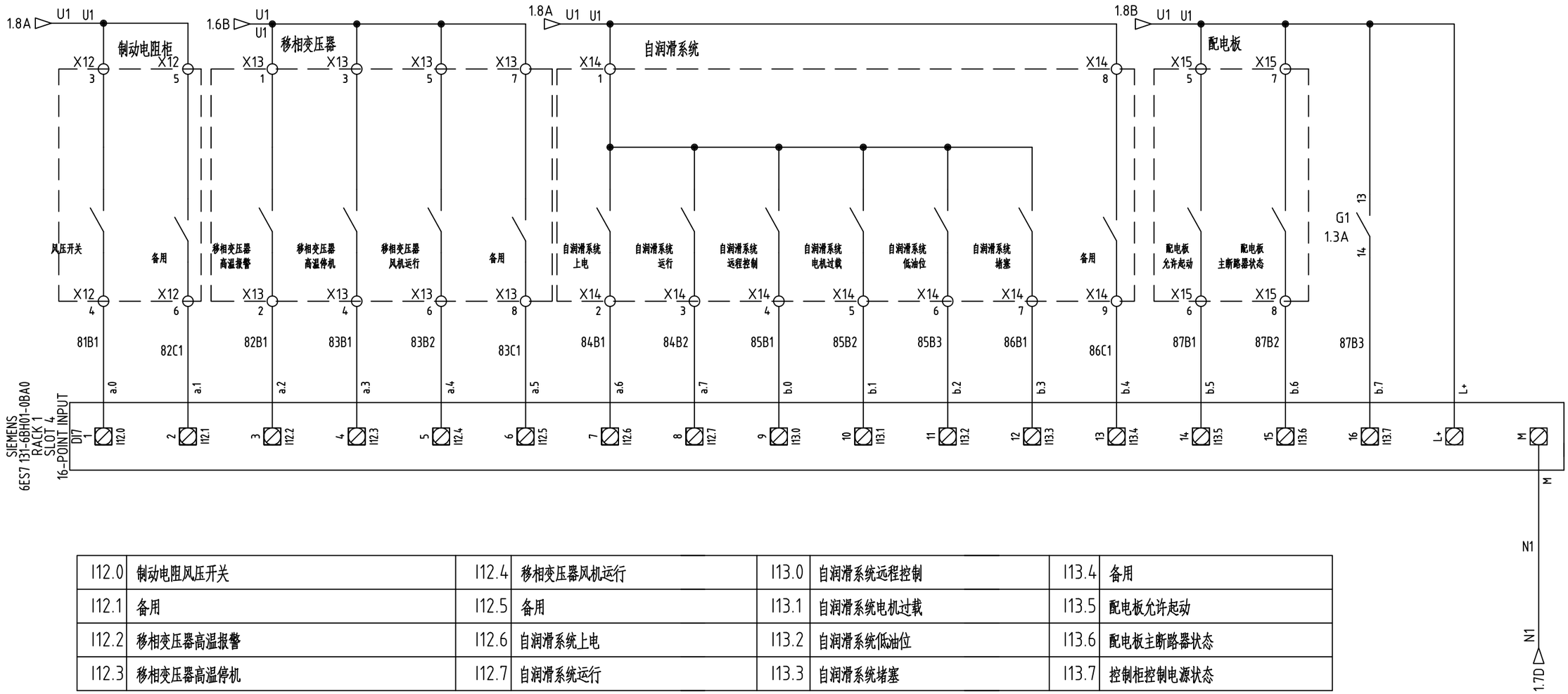

I12.0	制动电阻风压开关	I12.4	移相变压器风机运行	I13.0	自润滑系统远程控制	I13.4	备用
I12.1	备用	I12.5	备用	I13.1	自润滑系统电机过载	I13.5	配电板允许起动
I12.2	移相变压器高温报警	I12.6	自润滑系统上电	I13.2	自润滑系统低油位	I13.6	配电板主断路器状态
I12.3	移相变压器高温停机	I12.7	自润滑系统运行	I13.3	自润滑系统堵塞	I13.7	控制柜控制电源状态

技术要求：

1、PLC模块用0.5mm²的线，已标注线径的按标注线径接线（同一支路不重复标注），未标注的用1.0mm²的线；

2、虚线框内设备不在此控制箱内。

设计	
校对	
审核	
工艺	
标准	
批准	

标记	数量	修改单号	签字	日期
设计				
校核				
审核				
标检				
审定				
批准				

1320T电动齿轮齿条升降系统

桩腿控制单元原理图

所属装配图号	0422PTS28A-1-03-12100WG
图号	0422PTS28A-1-03-12101WG
标记	S
版本	
重量	
比例	1:1
共 18 页	第 8 页

武汉船用机械有限责任公司

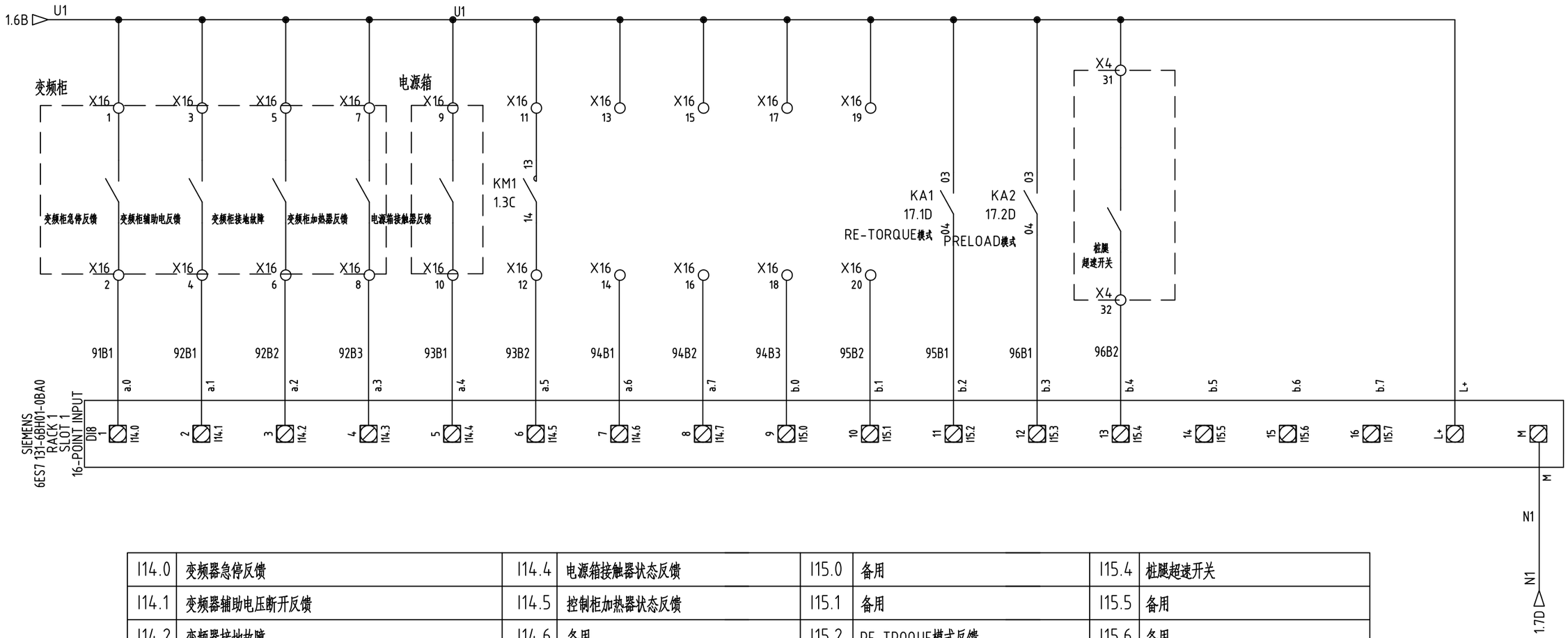

I14.0	变频器急停反馈	I14.4	电源箱接触器状态反馈	I15.0	备用	I15.4	桩腿超速开关
I14.1	变频器辅助电压断开反馈	I14.5	控制柜加热器状态反馈	I15.1	备用	I15.5	备用
I14.2	变频器接地故障	I14.6	备用	I15.2	RE-TROQUE模式反馈	I15.6	备用
I14.3	变频器加热器反馈	I14.7	备用	I15.3	PRELOAD模式反馈	I15.7	备用

技术要求：

1、PLC模块用0.5mm²的线，已标注线径的按标注线径接线（同一支路不重复标注），未标注的用1.0mm²的线；

2、虚线框内设备不在此控制箱内。

设计	
校对	
审核	
工艺	
标准	
批准	

标记	数量	修改单号	签字	日期
设计				
校核				
审核				
标检				
审定				
批准				

1320T电动齿轮齿条升降系统

桩腿控制单元原理图

所属装配图号	0422PTS28A-1-03-12100WG
图号	0422PTS28A-1-03-12101WG
标记	S
版本	
重量	
比例	1:1
共 18 页	第 9 页

武汉船用机械有限责任公司

0422PTS28A-1-03-12101WG

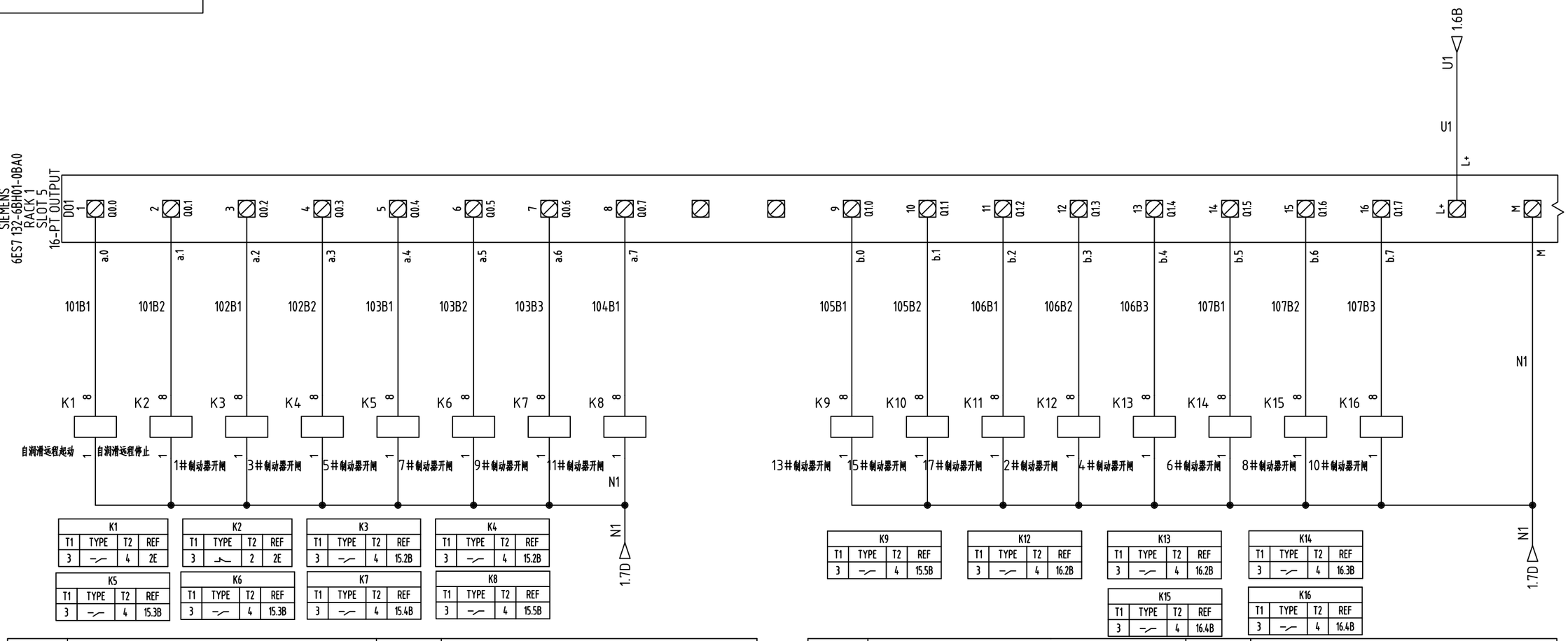

K1			
T1	TYPE	T2	REF
3		4	2E

K2			
T1	TYPE	T2	REF
3		2	2E

K3			
T1	TYPE	T2	REF
3		4	15.2B

K4			
T1	TYPE	T2	REF
3		4	15.2B

K5			
T1	TYPE	T2	REF
3		4	15.3B

K6			
T1	TYPE	T2	REF
3		4	15.3B

K7			
T1	TYPE	T2	REF
3		4	15.4B

K8			
T1	TYPE	T2	REF
3		4	15.5B

K9			
T1	TYPE	T2	REF
3		4	15.5B

K12			
T1	TYPE	T2	REF
3		4	16.2B

K13			
T1	TYPE	T2	REF
3		4	16.2B

K14			
T1	TYPE	T2	REF
3		4	16.3B

K15			
T1	TYPE	T2	REF
3		4	16.4B

K16			
T1	TYPE	T2	REF
3		4	16.4B

Q0.0	自润滑远程起动	Q0.4	5#制动器开闸
Q0.1	自润滑远程停止	Q0.5	7#制动器开闸
Q0.2	1#制动器开闸	Q0.6	9#制动器开闸
Q0.3	3#制动器开闸	Q0.7	11#制动器开闸

Q1.0	备用(13#制动器开闸)	Q1.4	4#制动器开闸
Q1.1	备用(15#制动器开闸)	Q1.5	6#制动器开闸
Q1.2	备用(17#制动器开闸)	Q1.6	8#制动器开闸
Q1.3	2#制动器开闸	Q1.7	10#制动器开闸

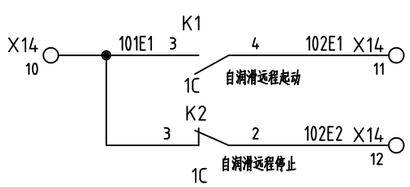

技术要求：

1、PL(模块用0.5mm²的线，已标注线径的按标注线径接线(同一支路不重复标注)，未标注的用1.0mm²的线；

2、虚线框内设备不在此控制箱内。

设计	
校对	
审核	
工艺	
标准	
批准	

标记	数量	修改单号	签字	日期
设计				
校核				
审核				
标检				
审定				
批准				

1320T电动齿轮齿条升降系统

桩腿控制单元原理图

所属装配图号	0422PTS28A-1-03-12100WG
图号	0422PTS28A-1-03-12101WG

标记	版本	重量	比例
S			1:1

共 18 页 第 10 页

武汉船用机械有限责任公司

0422PTS28A-1-03-12101WG

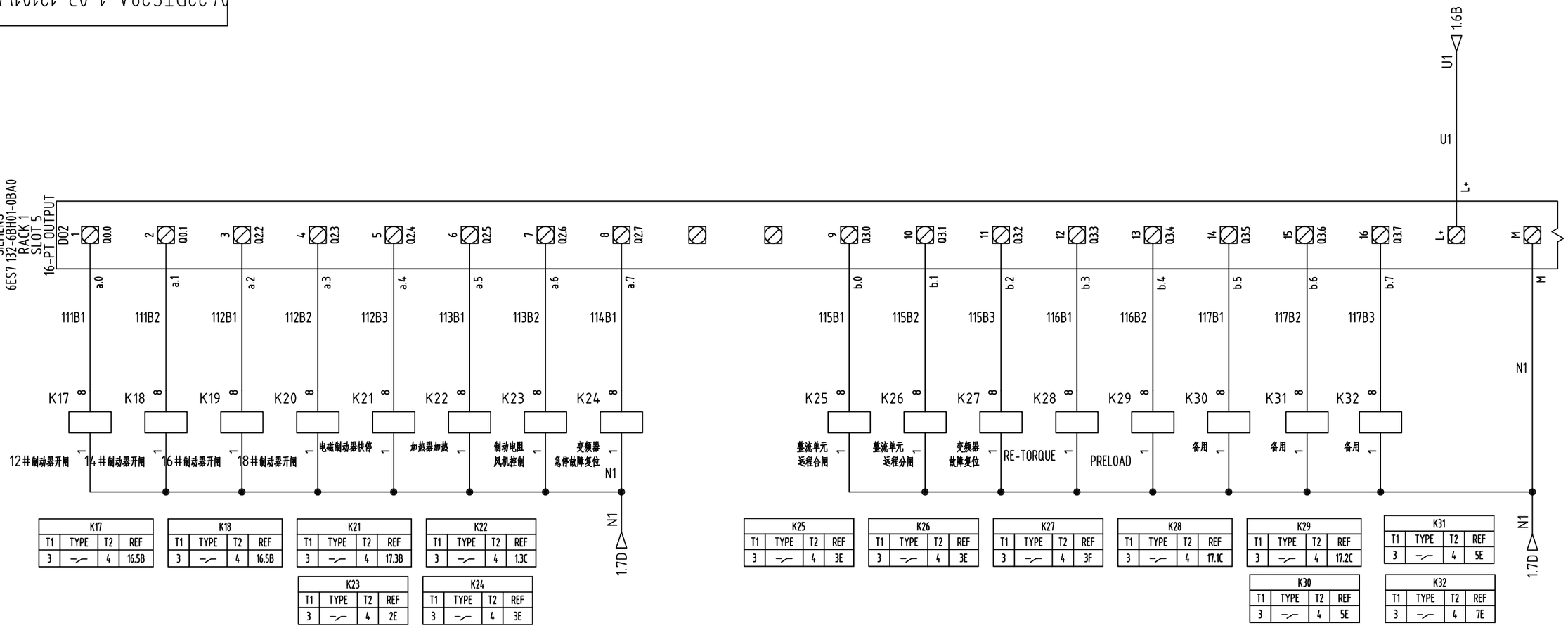

K17			
T1	TYPE	T2	REF
3	—/—	4	16.5B

K18			
T1	TYPE	T2	REF
3	—/—	4	16.5B

K21			
T1	TYPE	T2	REF
3	—/—	4	17.3B

K22			
T1	TYPE	T2	REF
3	—/—	4	1.3C

K23			
T1	TYPE	T2	REF
3	—/—	4	2E

K24			
T1	TYPE	T2	REF
3	—/—	4	3E

K25			
T1	TYPE	T2	REF
3	—/—	4	3E

K26			
T1	TYPE	T2	REF
3	—/—	4	3E

K27			
T1	TYPE	T2	REF
3	—/—	4	3F

K28			
T1	TYPE	T2	REF
3	—/—	4	17.1C

K29			
T1	TYPE	T2	REF
3	—/—	4	17.2C

K30			
T1	TYPE	T2	REF
3	—/—	4	5E

K31			
T1	TYPE	T2	REF
3	—/—	4	5E

K32			
T1	TYPE	T2	REF
3	—/—	4	7E

Q2.0	12#制动器开闸	Q2.4	电磁制动器快停
Q2.1	备用（14#制动器开闸）	Q2.5	加热器加热
Q2.2	备用（16#制动器开闸）	Q2.6	制动电阻风机控制（电源箱）
Q2.3	备用（18#制动器开闸）	Q2.7	变频器急停故障复位

Q3.0	整流单元远程合闸	Q3.4	PRELOAD 模式
Q3.1	整流单元远程分闸	Q3.5	备用
Q3.2	变频器故障复位	Q3.6	备用
Q3.3	RETORQUE 模式	Q3.7	备用

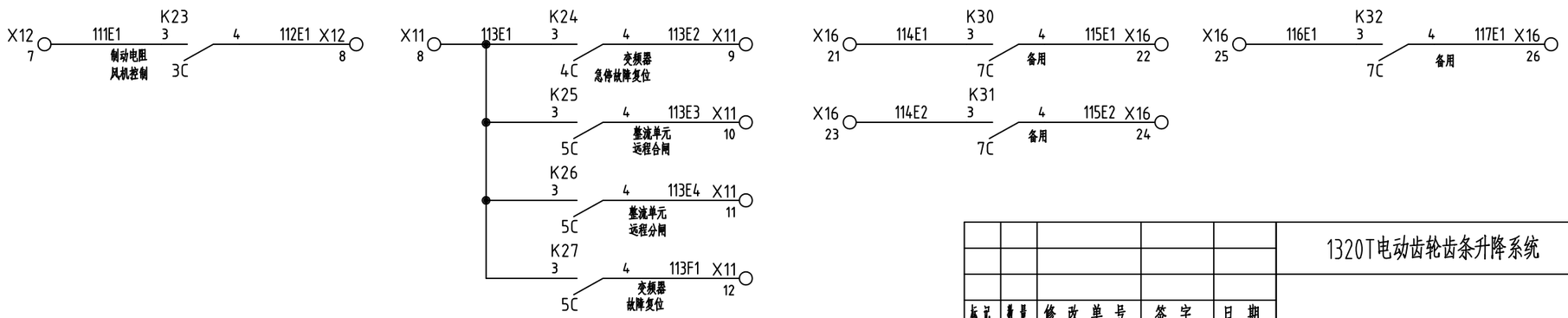

技术要求：

1、PLC模块用0.5mm²的线，已标注线径的按标注线径接线（同一支路不重复标注），未标注的用1.0mm²的线；

2、虚线框内设备不在此控制箱内.

设计	
校对	
审核	
工艺	
标准	
批准	

标记	数量	修改单号	签字	日期
设计				
校核				
审核				
标检				
审定				
批准				

1320T电动齿轮齿条升降系统

桩腿控制单元原理图

所属装配图号	0422PTS28A-1-03-12100WG
图号	0422PTS28A-1-03-12101WG

标记	版本	重量	比例
S			1:1

共 18 页 第 11 页

武汉船用机械有限责任公司

0422PTS28A-1-03-12101WG

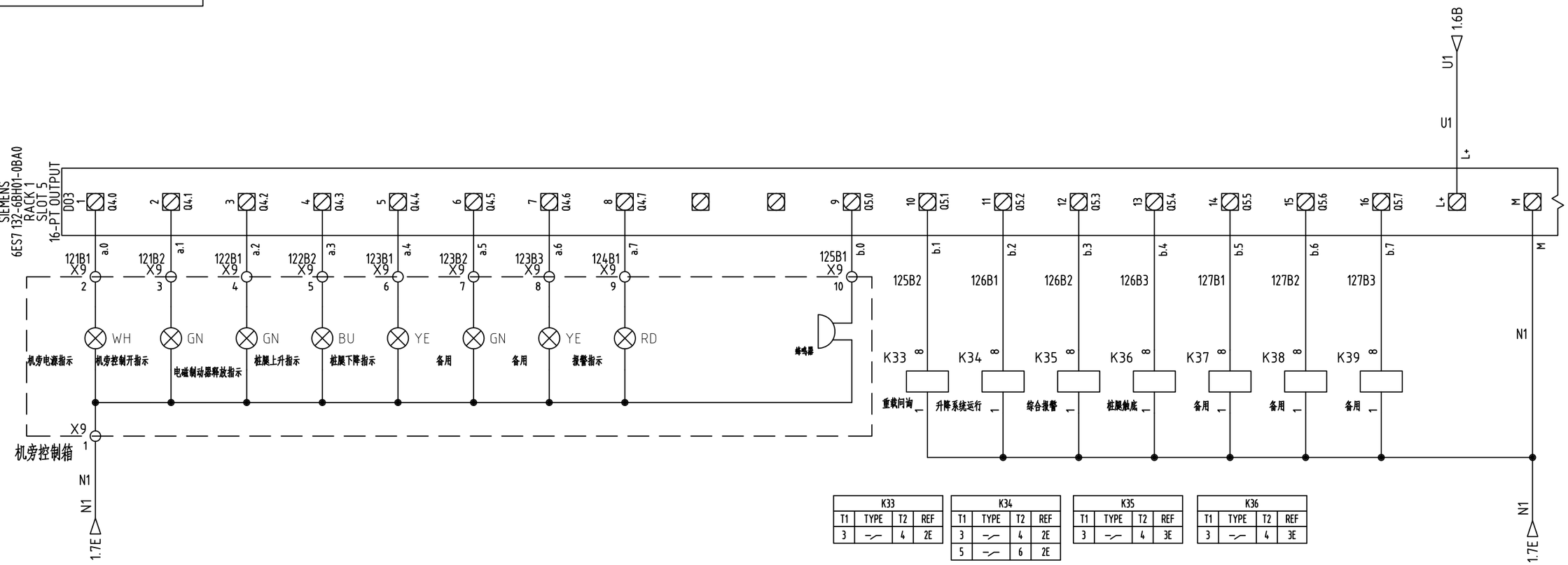

K33			
T1	TYPE	T2	REF
3	—/—	4	2E

K34			
T1	TYPE	T2	REF
3	—/—	4	2E
5	—/—	6	2E

K35			
T1	TYPE	T2	REF
3	—/—	4	3E

K36			
T1	TYPE	T2	REF
3	—/—	4	3E

Q4.0	机旁电源指示	Q4.4	桩腿下降指示
Q4.1	机旁控制开指示	Q4.5	备用
Q4.2	电磁制动器释放指示	Q4.6	备用
Q4.3	桩腿上升指示	Q4.7	报警指示

Q5.0	蜂鸣器	Q5.4	桩腿触底(DP)
Q5.1	重载问询(配电板)	Q5.5	备用
Q5.2	升降系统运行(配电板、吊机)	Q5.6	备用
Q5.3	综合报警(综合监控系统)	Q5.7	备用

K37			
T1	TYPE	T2	REF
3	—/—	4	2F

K38			
T1	TYPE	T2	REF
3	—/—	4	2F

K39			
T1	TYPE	T2	REF
3	—/—	4	3F

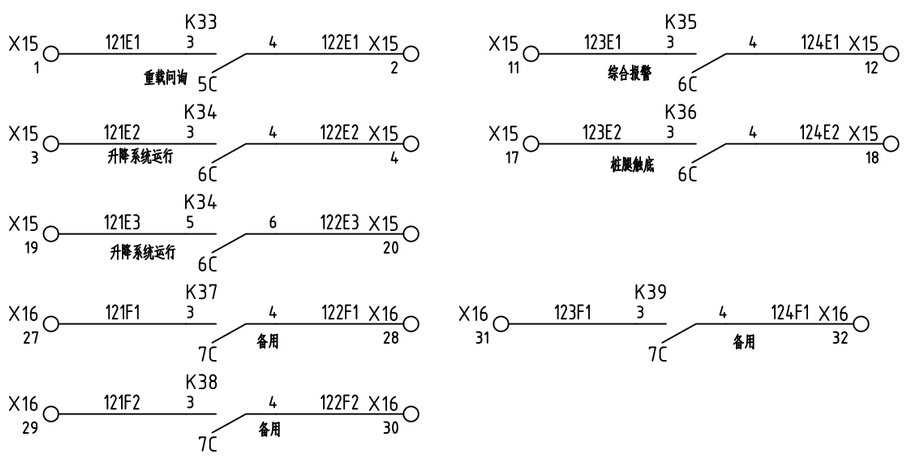

技术要求：

1、PLC模块用0.5mm²的线，已标注线径的按标注线径接线(同一支路不重复标注)，未标注的用1.0mm²的线；

2、虚线框内设备不在此控制箱内。

设计	
校对	
审核	
工艺	
标准	
批准	

标记	数量	修改单号	签字	日期
设计				
校核				
审核				
标检				
审定				
批准				

1320T电动齿轮齿条升降系统

桩腿控制单元原理图

所属装配图号	0422PTS28A-1-03-12100WG
图号	0422PTS28A-1-03-12101WG

标记	版本	重量	比例
S			1:1

共 18 页 第 12 页

武汉船用机械有限责任公司

0422PTS28A-1-03-12101WG

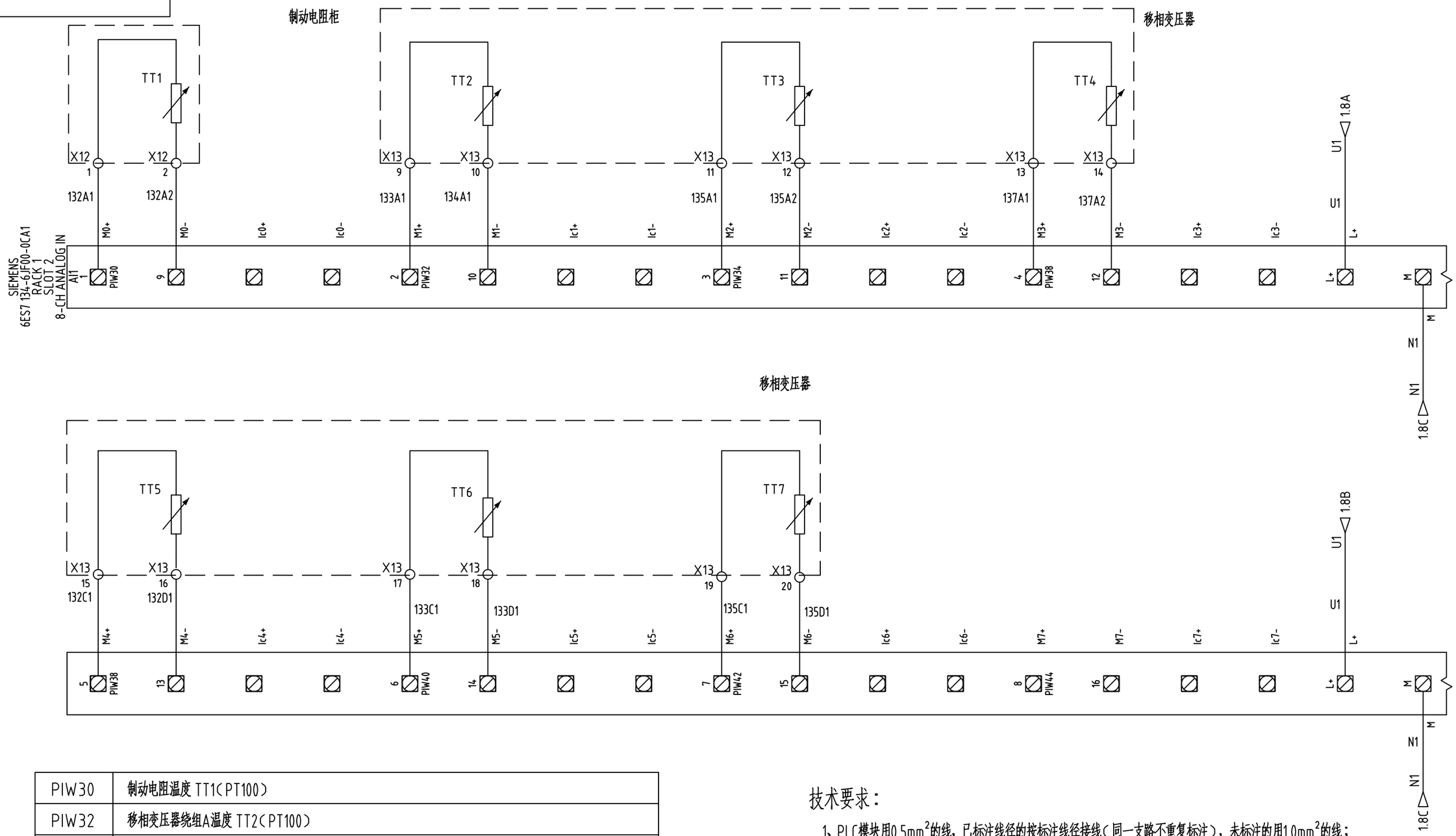

PIW30	制动电阻温度 TT1(PT100)
PIW32	移相变压器绕组A温度 TT2(PT100)
PIW34	移相变压器绕组B温度 TT3(PT100)
PIW36	移相变压器绕组C温度 TT4(PT100)
PIW38	移相变压器绕组X温度 TT5(PT100)
PIW40	移相变压器绕组Y温度 TT6(PT100)
PIW42	移相变压器绕组Z温度 TT7(PT100)
PIW44	备用

技术要求：

1、PLC模块用0.5mm²的线，已标注线径的按标注线径接线(同一支路不重复标注)，未标注的用1.0mm²的线；

2、虚线框内设备不在此控制箱内。

设计					
校对					
审核					
工艺					
标准					
批准					

标记	数量	修改单号	签字	日期
设计				
校核				
审核				
标检				
审定				
批准				

1320T电动齿轮齿条升降系统

桩腿控制单元原理图

所属装配图号	0422PTS28A-1-03-12100WG
图号	0422PTS28A-1-03-12101WG

标记	版本	重量	比例
S			1:1

共 18 页 第 13 页

WMMP 武汉船用机械有限责任公司

0422PTS28A-1-03-12101WG

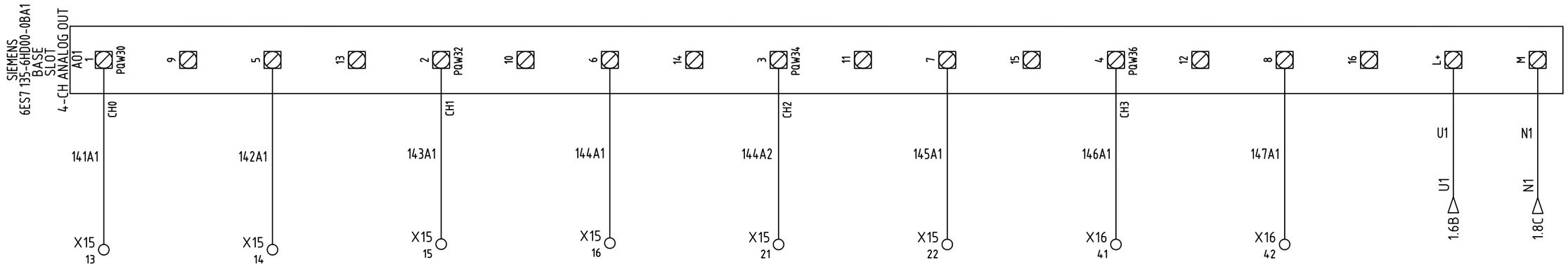

PQW30	单桩载荷信号输出给DP（4~20mA）
PQW32	单桩位移信号输出给DP（4~20mA）
PQW34	单桩位移信号给吊机（4~20mA）
PQW36	备用

技术要求：

1、PLC模块用0.5mm²的线，已标注线径的按标注线径接线（同一支路不重复标注），未标注的用1.0mm²的线；

2、虚线框内设备不在此控制箱内。

设计	
校对	
审核	
工艺	
标准	
批准	

标记	数量	修改单号	签字	日期
设计				
校核				
审核				
标检				
审定				
批准				

1320T电动齿轮齿条升降系统

桩腿控制单元原理图

所属装配图号	0422PTS28A-1-03-12100WG
图号	0422PTS28A-1-03-12101WG
标记 S	版本
重量	比例 1:1
共 18 页	第 14 页

武汉船用机械有限责任公司

0422PTS28A-1-03-12101WG

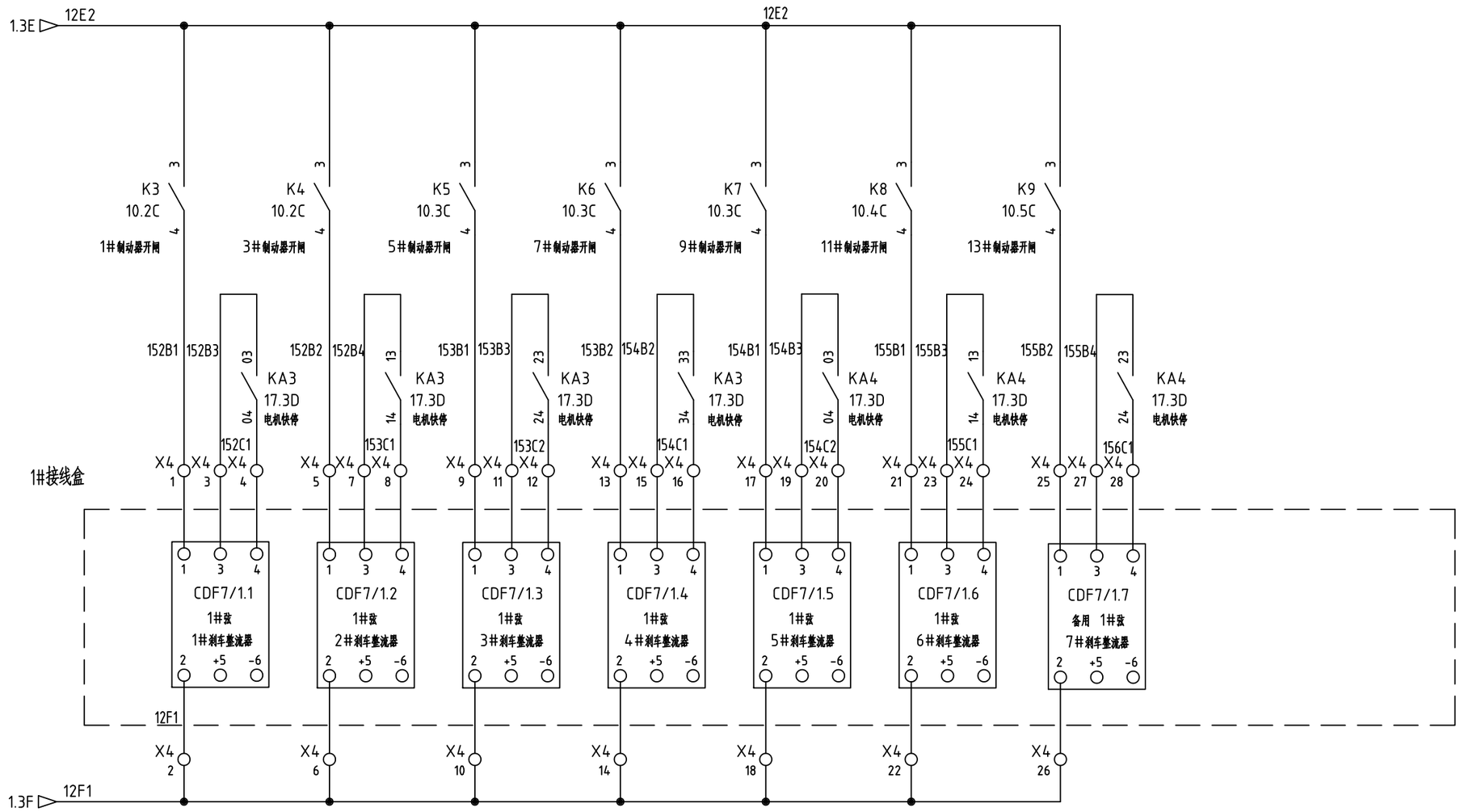

技术要求：

1、PLC模块用0.5mm²的线，已标注线径的按标注线径接线（同一支路不重复标注），未标注的用1.0mm²的线；

2、虚线框内设备不在此控制箱内。

设计	
校对	
审核	
工艺	
标准	
批准	

标记	数量	修改单号	签字	日期
设计				
校核				
审核				
标检				
审定				
批准				

1320T电动齿轮齿条升降系统

桩腿控制单元原理图

所属装配图号	0422PTS28A-1-03-12100WG
图号	0422PTS28A-1-03-12101WG
标记	S
版本	
重量	
比例	1:1
共 18 页	第 15 页

WUXIP 武汉船用机械有限责任公司

0422PTS28A-1-03-12101WG

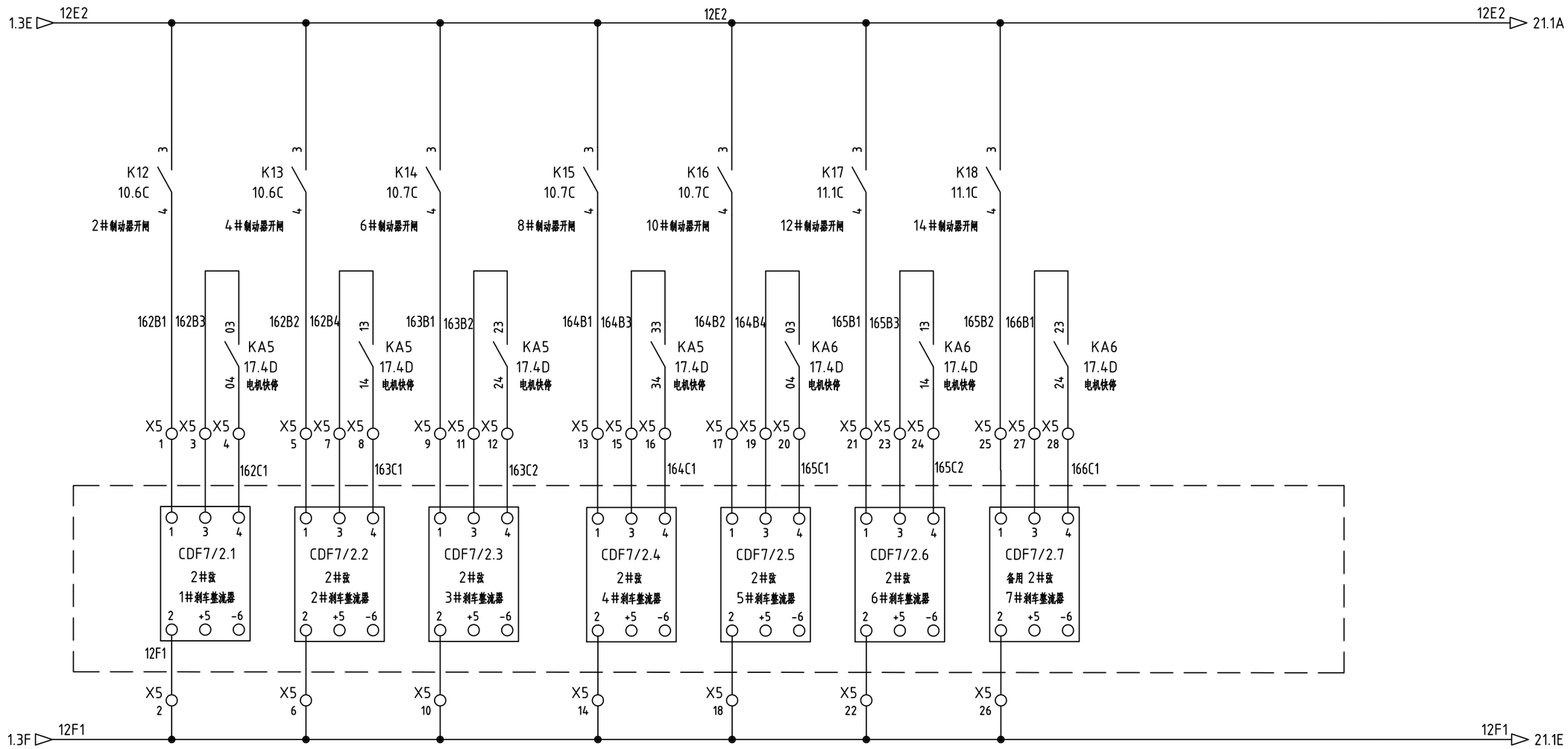

技术要求：

1、PLC模块用0.5mm²的线，已标注线径的按标注线径接线（同一支路不重复标注），未标注的用1.0mm²的线；

2、虚线框内设备不在此控制箱内。

设计	
校对	
审核	
工艺	
标准	
批准	

标记	数量	修改单号	签字	日期
设计				
校核				
审核				
标检				
审定				
批准				

1320T电动齿轮齿条升降系统

桩腿控制单元原理图

所属装配图号	0422PTS28A-1-03-12100WG
图号	0422PTS28A-1-03-12101WG
标记	S
版本	
重量	
比例	1:1
共 18 页	第 16 页

WXMIP 武汉船用机械有限责任公司

0422PTS28A-1-03-12101WG

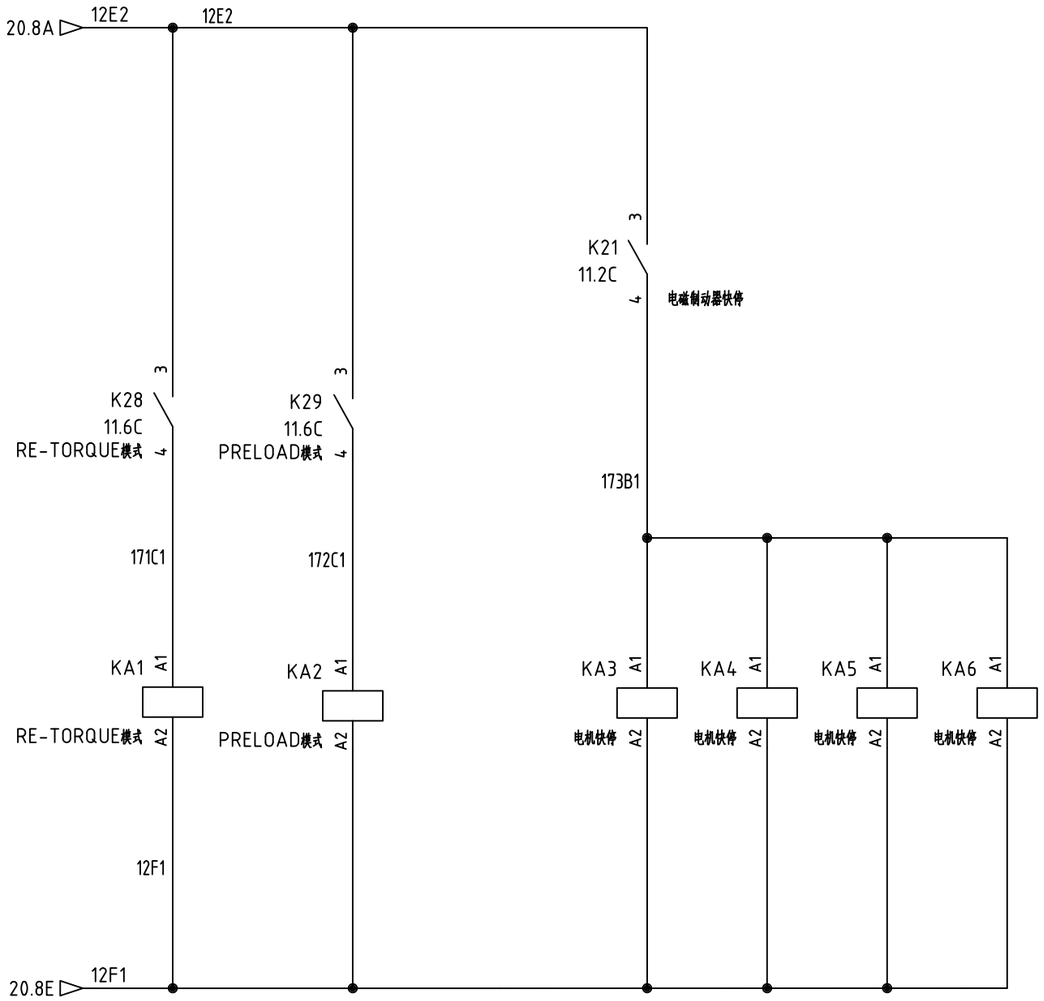

KA3			
T1	TYPE	T2	REF
03	—/—	04	15.2C
13	—/—	14	15.3C
23	—/—	24	15.3C
33	—/—	34	15.4C

KA4			
T1	TYPE	T2	REF
03	—/—	04	15.4C
13	—/—	14	15.5C
23	—/—	24	15.6C

KA5			
T1	TYPE	T2	REF
03	—/—	04	16.2C
13	—/—	14	16.3C
23	—/—	24	16.3C
33	—/—	34	16.4C

KA6			
T1	TYPE	T2	REF
03	—/—	04	16.5C
13	—/—	14	16.5C
23	—/—	24	16.6C

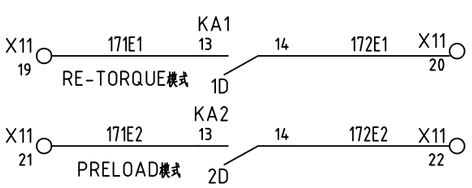

KA1			
T1	TYPE	T2	REF
03	—/—	04	9.5B
13	—/—	14	2E

KA2			
T1	TYPE	T2	REF
03	—/—	04	9.6B
13	—/—	14	2E

技术要求：

1、PLC模块用0.5mm²的线，已标注线径的按标注线径接线（同一支路不重复标注），未标注的用1.0mm²的线；

2、虚线框内设备不在此控制箱内。

设计	
校对	
审核	
工艺	
标准	
批准	

标记	数量	修改单号	签字	日期
设计				
校核				
审核				
标检				
审定				
批准				

1320T电动齿轮齿条升降系统

桩腿控制单元原理图

所属装配图号	0422PTS28A-1-03-12100WG
图号	0422PTS28A-1-03-12101WG

标记	版本	重量	比例
S			1:1

共 18 页 第 17 页

武汉船用机械有限责任公司

0422PTS28A-1-03-12101WG

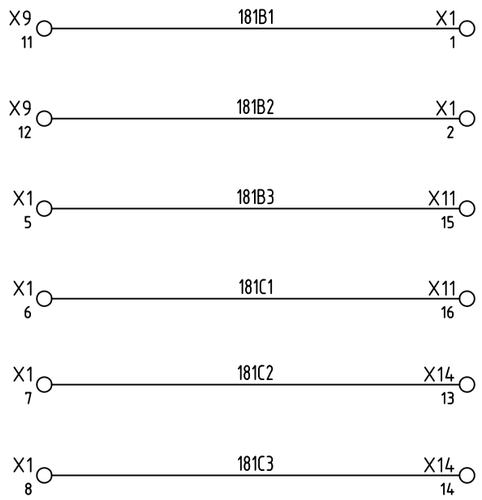

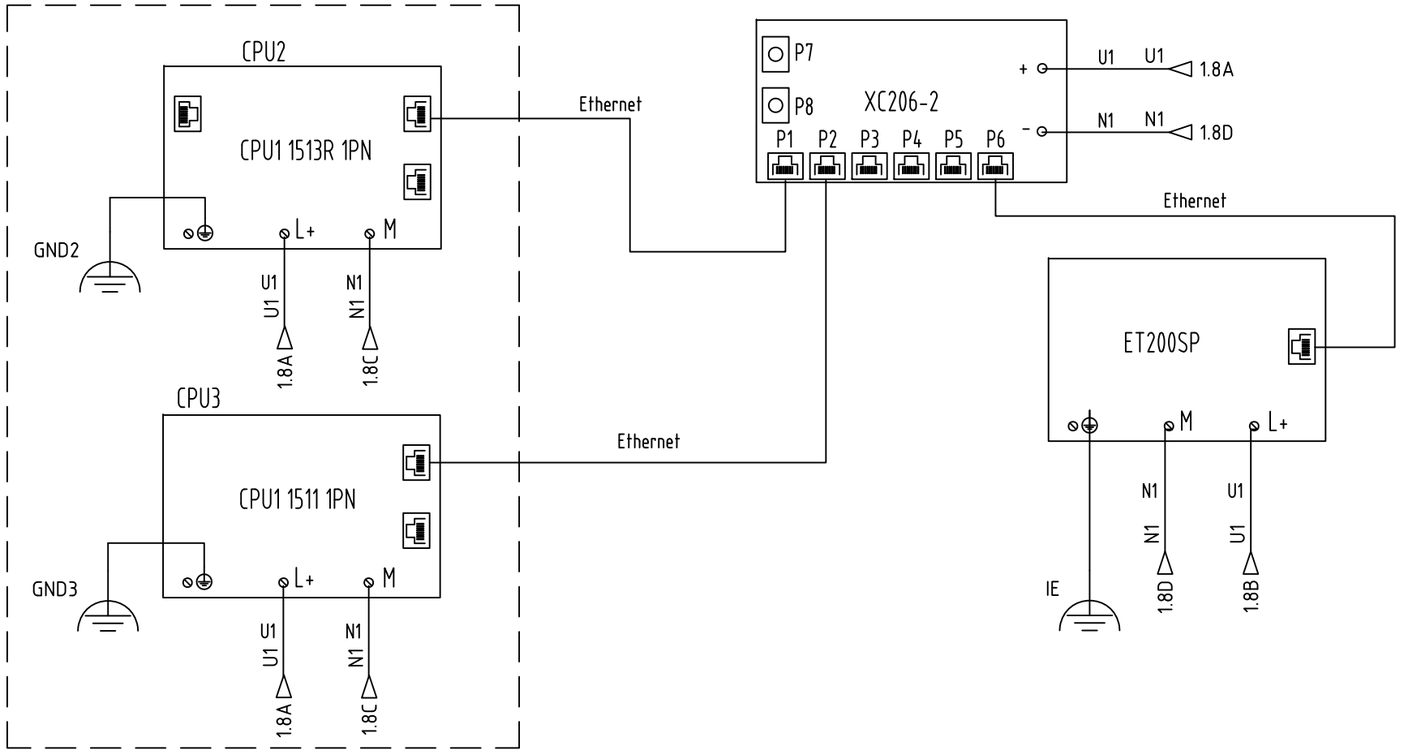

上述CPU2和CPU3只安装在1#桩腿控制单元中，
其余桩腿控制单元中无此CPU.

技术要求：

1、PLC模块用0.5mm²的线，已标注线径的按标注线径接线（同一支路不重复标注），未标注的用1.0mm²的线；
2、虚线框内设备不在此控制箱内.

设计	
校对	
审核	
工艺	
标准	
批准	

标记	数量	修改单号	签字	日期
设计				
校核				
审核				
标检				
审定				
批准				

1320T电动齿轮齿条升降系统

桩腿控制单元原理图

所属装配图号	0422PTS28A-1-03-12100WG
图号	0422PTS28A-1-03-12101WG
标记	S
版本	
重量	
比例	1:1
共 18 页	第 18 页

WMMP 武汉船用机械有限责任公司

0422PTS28A-1-03-12200WG

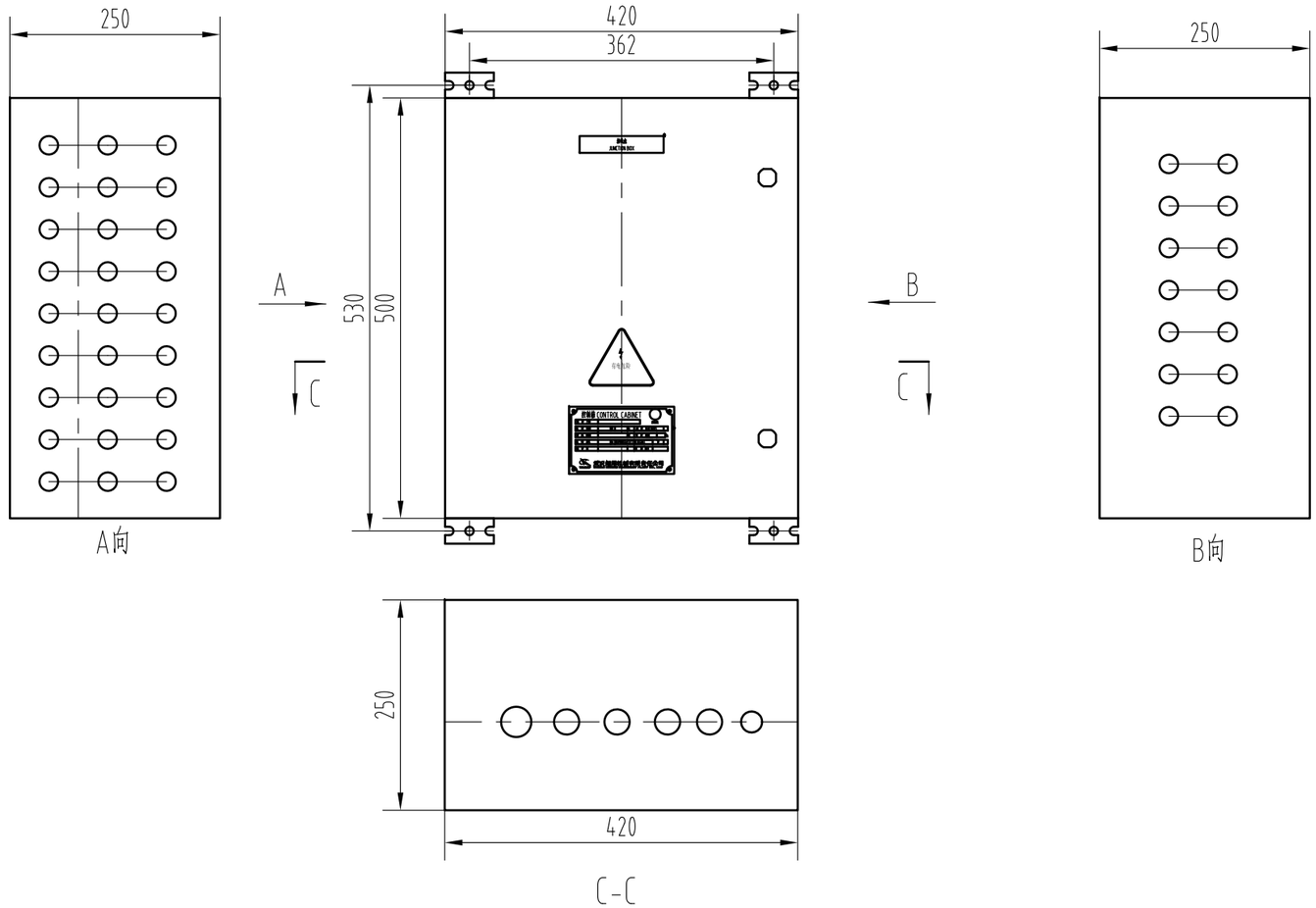

防护等级：IP56
材质：S316L
重量：25KG
进线方式：填料函进线

设计	
校对	
审核	
工艺	
标准	
批准	

标记	数量	修改单号	签字	日期
设计				
校核				
审核				
标检				
审定				
批准				

1320T电动齿轮齿条升降系统

桩腿接线盒

所属装配图号	0422PTS28A-1-03-00WG
图号	0422PTS28A-1-03-12200WG

标记	版本	重量	比例
S			1:7
共 1 页		第 1 页	

武汉船用机械有限责任公司

0422PTS28A-1-03-31100WG

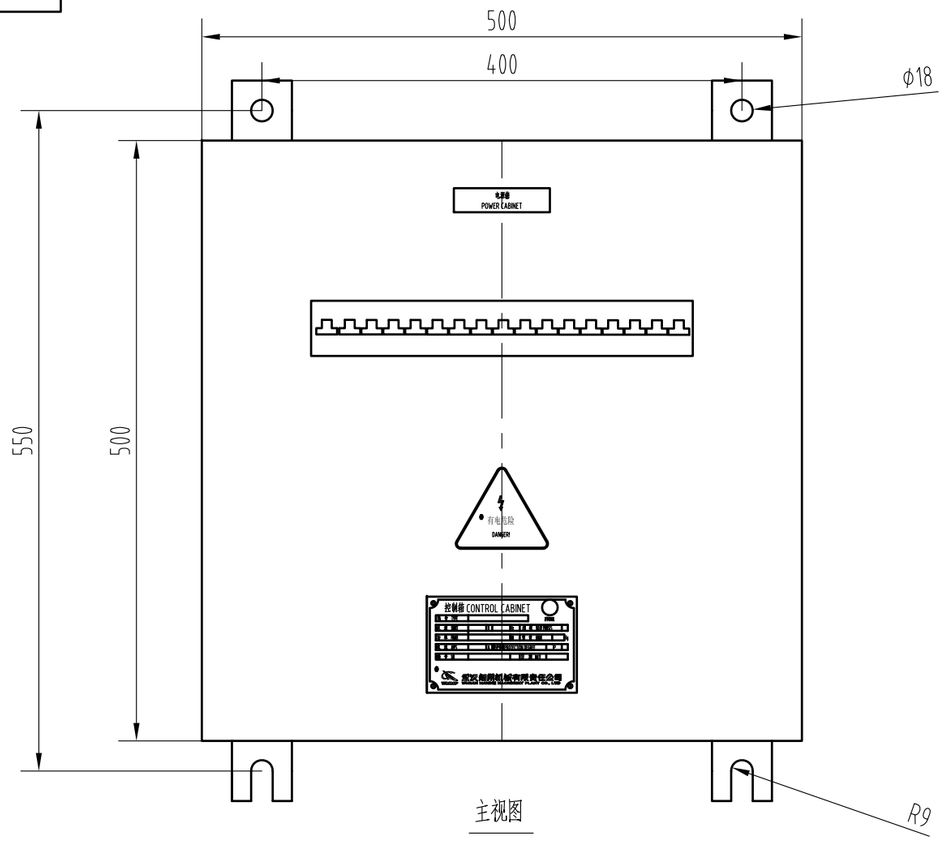

主视图

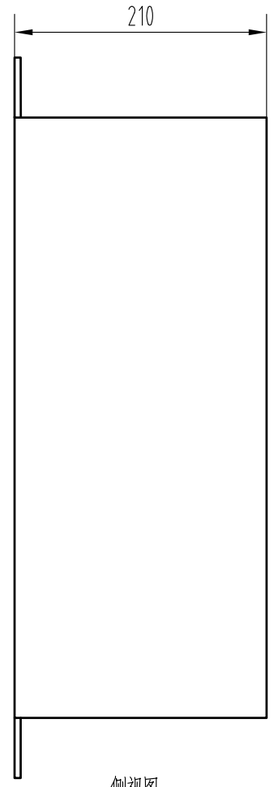

侧视图

颜　　色：RAL7035
防护等级：IP44
重　　量：25KG
进线方式：底部填料函进线

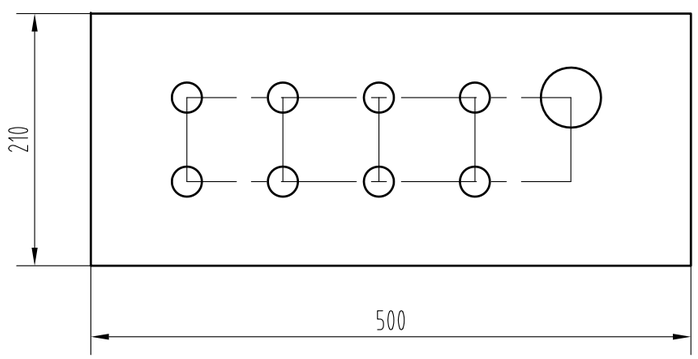

底部视图

设计	
校对	
审核	
工艺	
标准	
批准	

标记	数量	修改单号	签字	日期

设　计		
校　核		
审　核		
标　检		
审　定		
批　准		

1320T电动齿轮齿条升降系统

电源箱

所属装配图号	0422PTS28A-1-03-00WG
图　号	0422PTS28A-1-03-31100WG

标记	版本	重量	比例
S			1:5

共　1　页　　第　1　页

WMMP 武汉船用机械有限责任公司

0422PTS28A-1-03-31201WG

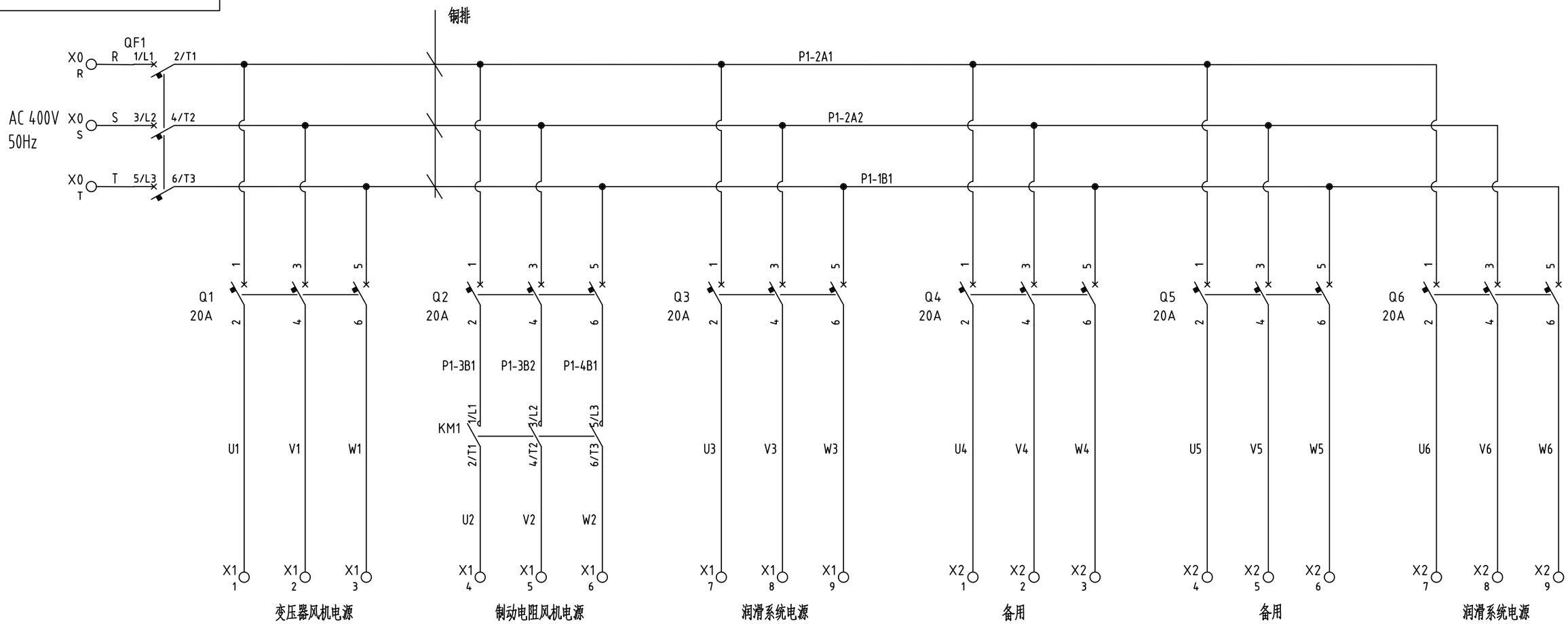

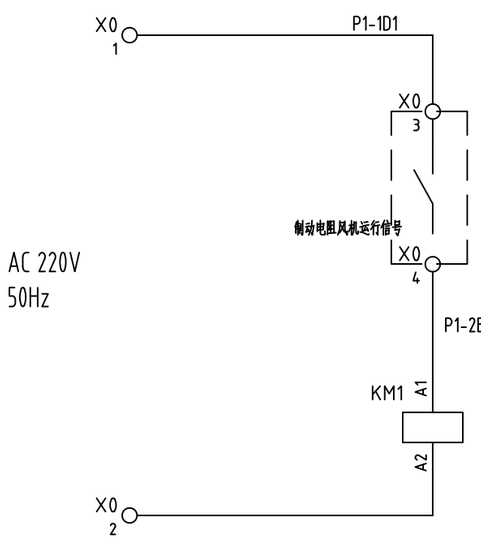

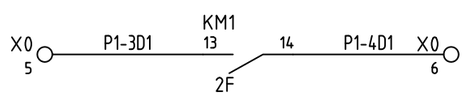

KM1			
T1	TYPE	T2	REF
1/L1	—/—	2/T1	3C
3/L2	—/—	4/T2	3C
5/L3	—/—	6/T3	4C
13	—/—	14	4D

注：

1、图中已标注线径的按标注线径进行接线，同一支路不重复标注，未标注的线径按2.5mm²进行接线；

2、虚框内所示设备不在本控制箱内。

设计	
校对	
审核	
工艺	
标准	
批准	

标记	数量	修改单号	签字	日期
设计				
校核				
审核				
标检				
审定				
批准				

1320T电动齿轮齿条升降系统

电源箱原理图

所属装配图号	0422PTS28A-1-03-31200WG
图号	0422PTS28A-1-03-31201WG
标记	S
版本	
重量	
比例	1:1
共 1 页	第 1 页

武汉船用机械有限责任公司

0422PTS28A-1-03-31200WG

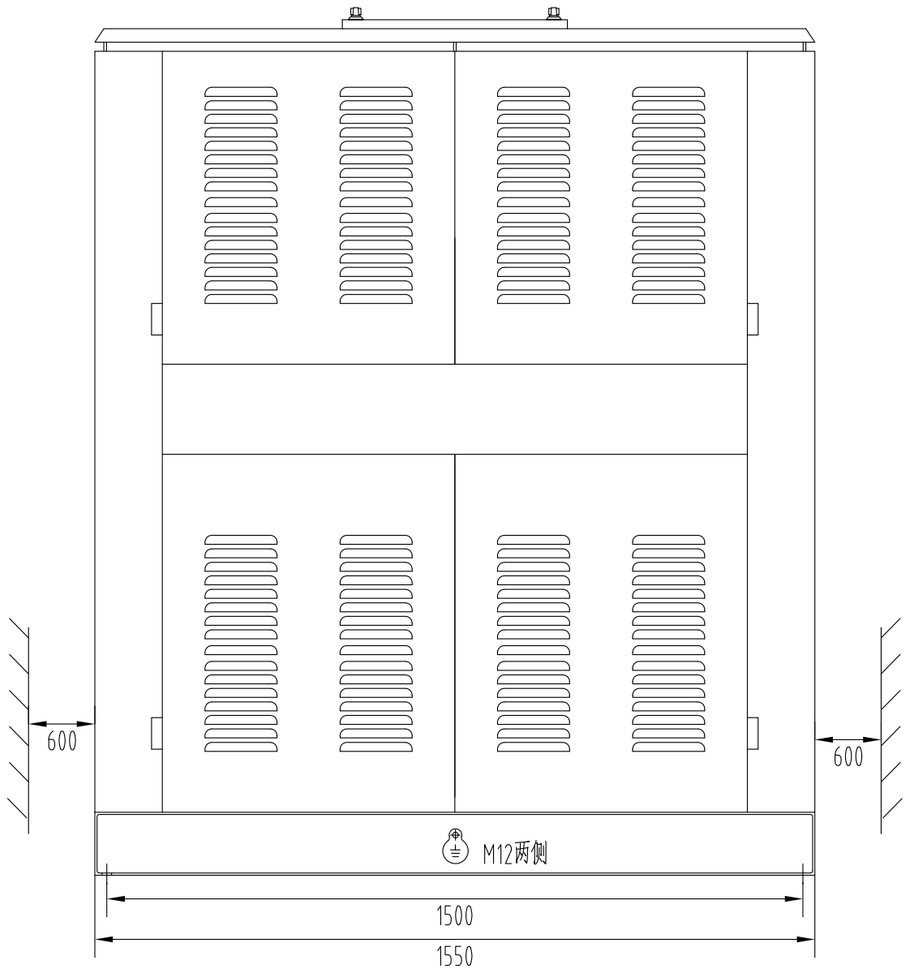

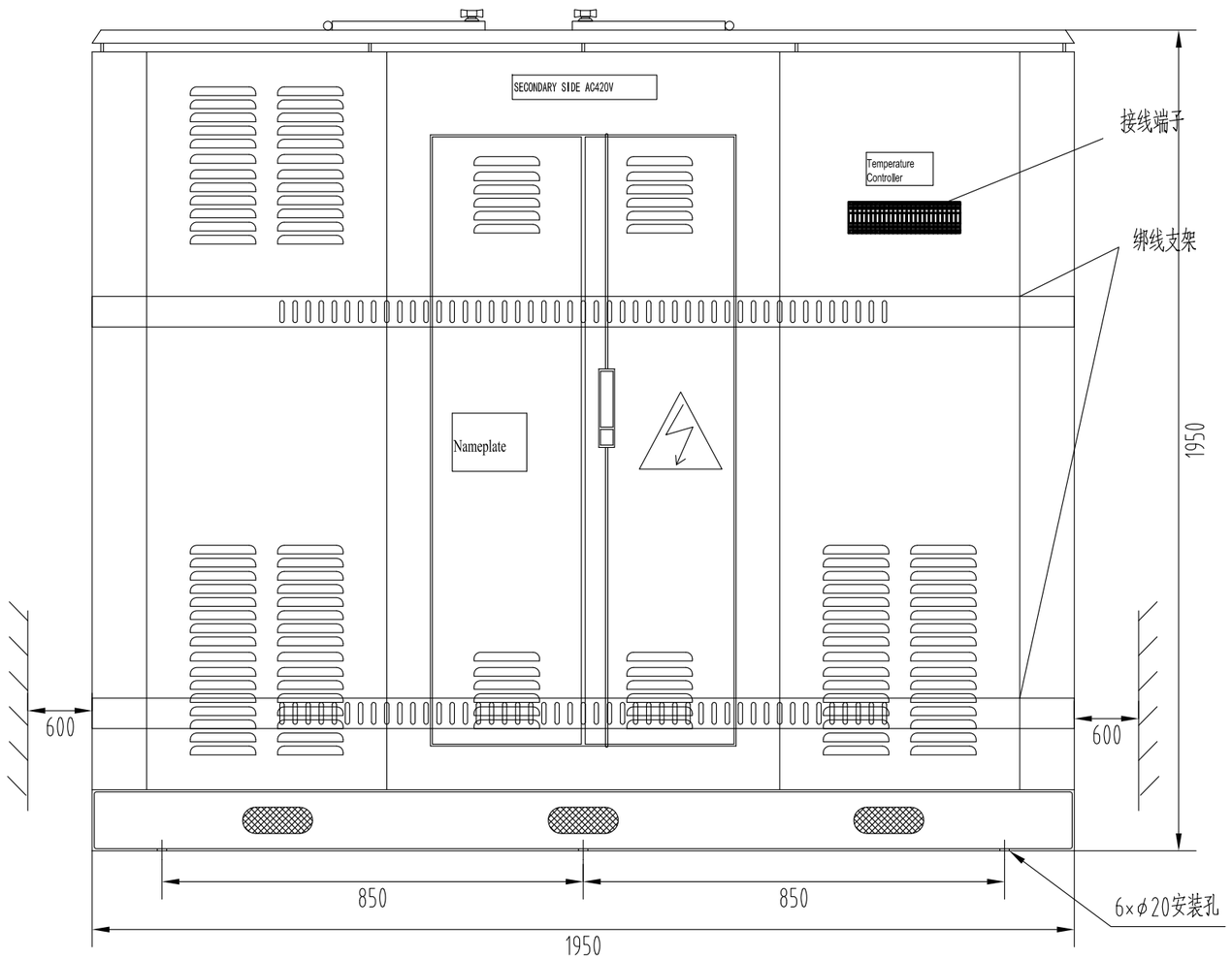

初级：AC690V，次级2×AC 400V
容量：700KVA
防护等级：IP23
颜色：RAL7035
主变压器：连接方式 Dyd（每两台原边分别移相±7.5°）
预充磁变压器：容量7kVA；电压：690V/690V；连接组：Dd0
冷却方式：强制风冷
重量：2500KG

设计	
校对	
审核	
工艺	
标准	
批准	

标记	数量	修改单号	签字	日期

设计		
校核		
审核		
标检		
审定		
批准		

1320T电动齿轮齿条升降系统

移相变压器

所属装配图号	0422PTS28A-1-03-00WG
图号	0422PTS28A-1-03-31200WG
标记	S
版本	
重量	
比例	1:25
共 3 页	第 1 页

WMMP 武汉船用机械有限责任公司

0422PTS28A-1-03-31200WG

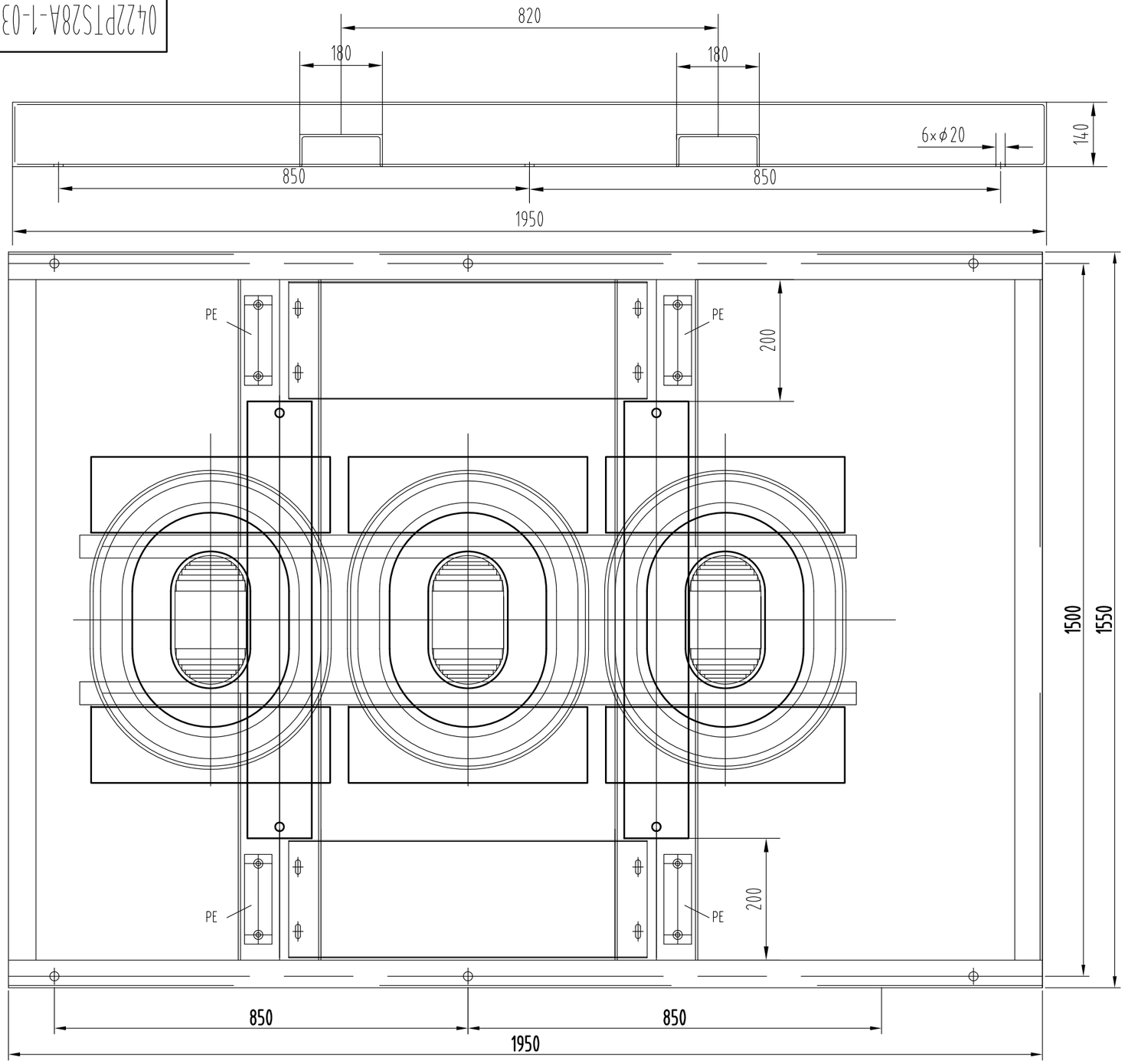

初级：AC690V，次级2×AC 400V
容量：700KVA
防护等级：IP23
颜色：RAL7035
主变压器：连接方式 Dyd（每两台原边分别移相±7.5°）
预充磁变压器：容量7kVA；电压：690V/690V；连接组：Dd0
冷却方式：强制风冷
重量：2500KG

设计	
校对	
审核	
工艺	
标准	
批准	

标记	数量	修改单号	签字	日期

设计	
校核	
审核	
标检	
审定	
批准	

1320T电动齿轮齿条升降系统

移相变压器

所属装配图号	0422PTS28A-1-03-00WG
图号	0422PTS28A-1-03-31200WG

标记	版本	重量	比例
S			1:5

共 3 页 第 2 页

WMMP 武汉船用机械有限责任公司

0422PTS28A-1-03-31200WG

1.电气接线图1
Electrical wiring diagram

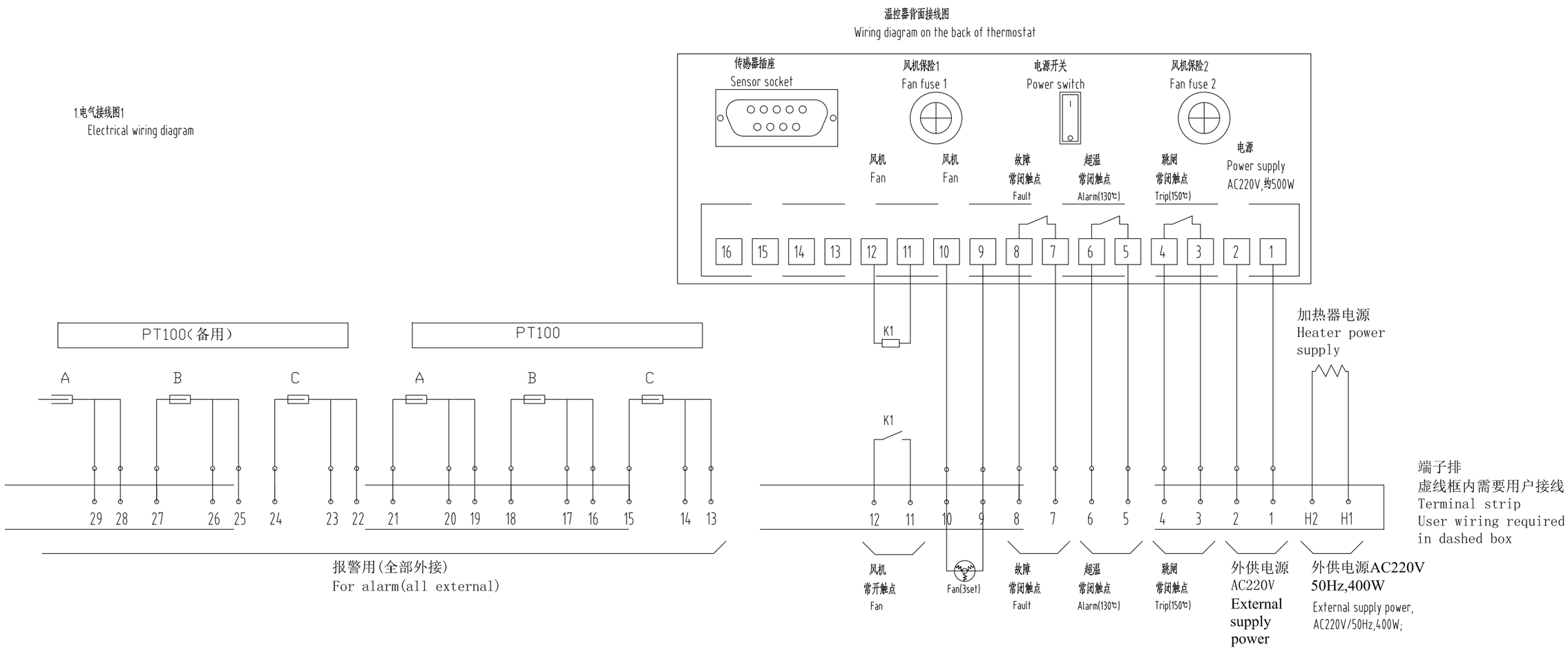

设计	
校对	
审核	
工艺	
标准	
批准	

标记	数量	修改单号	签字	日期
设计				
校核				
审核				
标检				
审定				
批准				

1320T电动齿轮齿条升降系统

移相变压器

所属装配图号	0422PTS28A-1-03-00WG
图号	0422PTS28A-1-03-31200WG

标记	版本	重量	比例
S			1:1

共 3 页 第 3 页

武汉船用机械有限责任公司

0422PTS28A-1-03-31300WG

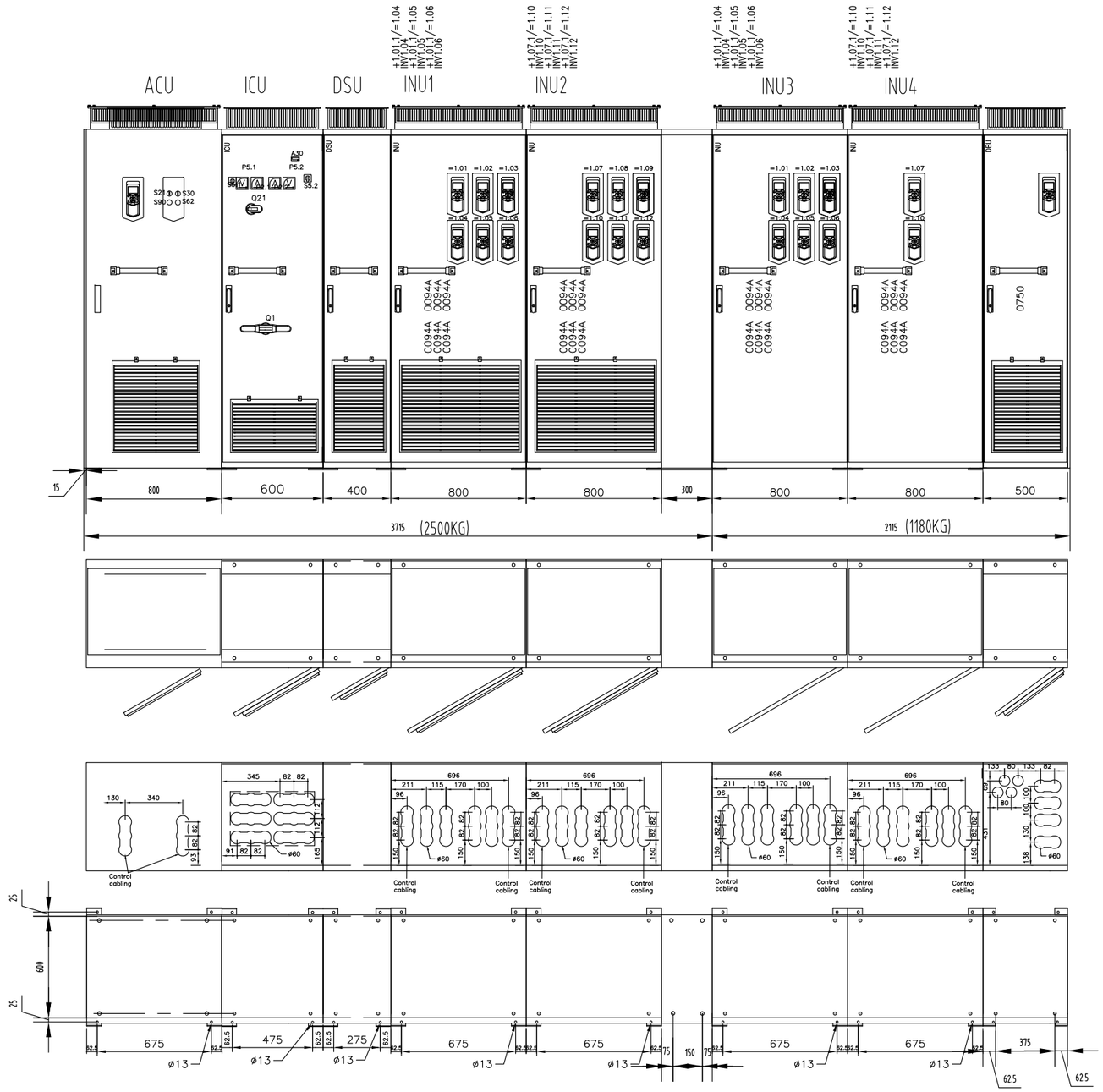

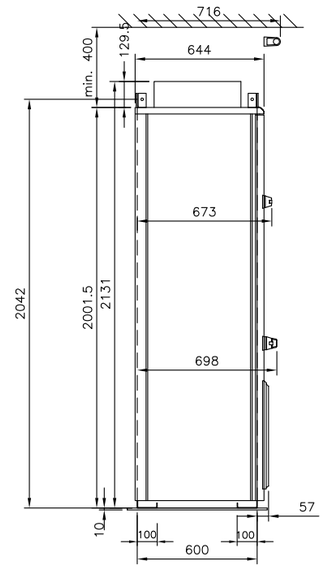

防护等级：IP22
柜体颜色：RAL7035
柜体重量：3680KG
冷却方式：强迫风冷

设计	
校对	
审核	
工艺	
标准	
批准	

标记	数量	修改单号	签字	日期
设计				
校核				
审核				
标检				
审定				
批准				

1320T电动齿轮齿条升降系统

变频电源柜

所属装配图号	0422PTS28A-1-03-00WG
图号	0422PTS28A-1-03-31300WG
标记	S
版本	
重量	
比例	1:30
共 1 页	第 1 页

武汉船用机械有限责任公司

ACS 880 MultiDrive

Project name:Zhaka Jack-up Lift System

Customer:华西海工

ABB order ref: 503856681

Application Engineer : Sky-Xin Zhang

Project Manager : Chunyu Song

ABB Beijing Drive Systems Co., Ltd.

No.1,Block D, A-10

Jiuxianqiao Beilu, Chaoyang District,

Beijing 1000156, P.R.China

Tel.:(86-10)58217788

Fax:(86-10)58217618

1. Contents

2. Dimension Drawing
Connection Drawing

3. =01
DSU
ACS880-307-0910A-3

4. =1.01
INV1.01
ACS880-107-0078A-3

5. =1.02
INV1.02
ACS880-107-0078A-3

6. =1.03
INV1.03
ACS880-107-0078A-3

7. =1.04
INV1.04
ACS880-107-0078A-3

8. =1.05
INV1.05
ACS880-107-0078A-3

9. =1.06
INV1.06
ACS880-107-0078A-3

10. =1.07
INV1.07
ACS880-107-0078A-3

11. =1.08
INV1.08
ACS880-107-0078A-3

12. =1.09
INV1.09
ACS880-107-0078A-3

13. =1.10
INV1.10
ACS880-107-0078A-3

14. =1.11
INV1.11
ACS880-107-0078A-3

15. =1.12
INV1.12
ACS880-107-0078A-3

16. =2.01
INV2.01
ACS880-107-0078A-3

ACS 880 MultiDrive

ABB

ABB Beijing Drive Systems Co., Ltd.

No.1,Block D, A-10

Jiuxianqiao Beilu, Chaoyang District,

Beijing 1000156, P.R.China

Tel.:(86-10)58217788

Fax:(86-10)58217618

17. =2.02

INV2.02

ACS880-107-0078A-3

18. =2.03

INV2.03

ACS880-107-0078A-3

19. =2.04

INV2.04

ACS880-107-0078A-3

20. =2.05

INV2.05

ACS880-107-0078A-3

21. =2.06

INV2.06

ACS880-107-0078A-3

22. =2.07

INV2.07

ACS880-+C45:C46107-0078A-3

23. =2.08

INV2.08

ACS880-107-0078A-3

24. =2.09

INV2.09

ACS880-107-0078A-3

25. =2.10

INV2.10

ACS880-107-0078A-3

26. =2.11

INV2.11

ACS880-107-0078A-3

27. =2.12

INV2.12

ACS880-107-0078A-3

28. =60

Braking Unit

ACS880-607-0500-3

29.

30.

31.

32.

We reserve all rights in this document and in the information contained therein. Reproduction, use or disclosure to third parties without express authority is strictly forbidden. Copr. ABB Automation

Degree of protection	IP22
Standards	EN/IEC
EMC protection	2nd environment
Cable entry type	Standard
Colour	Special colour, RAL colours, RAL 7035
Additional information	

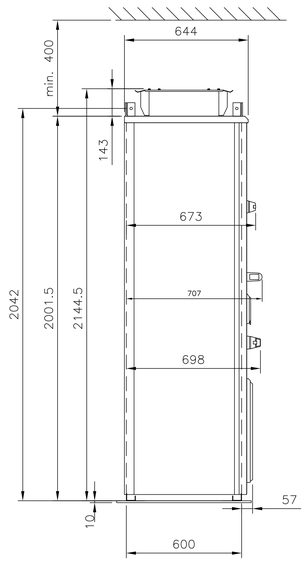

LEGEND	
Q1.1	SUPPLY UNIT MAIN SWITCH
Q21	CONTROL POWER SWITCH
A30	TIME COUNTER
P2.1	AC CURRENT L1
P2.2	AC CURRENT L1
P5.1-2	AC VOLTAGE
S5.1-2	AC VOLTAGE SWITCH
S21	SUPPLY UNIT MAIN CONTACTOR CTRL
S62	EMERGENCY STOP RESET
S90	EARTH FAULT RESET
S30	LOCAL/REMOTE

P340530 / 29711

Cust. Doc. No.	Prepared 2023/8/3 Sky-Xin Zhang	Title ACS880 Multidrives	Dimensional drawing EDA1 / Item des.
Customer WMMP	Approved 2023/8/3 Shuo Wang		Scale (A3) 30 / Rev.ind. B / Lang. EN
	Project Zhaka Jack-up Lift System	ABB Drives	Doc. No. 3ABDC230674-311 / Sheet 311
ABB Ref. No. _ Cust Ref. No.	Zhaka Jack-up Lift System-1		Cont. –

THIS PART END OF CABINETS,
IF CUSTOMER USE IT

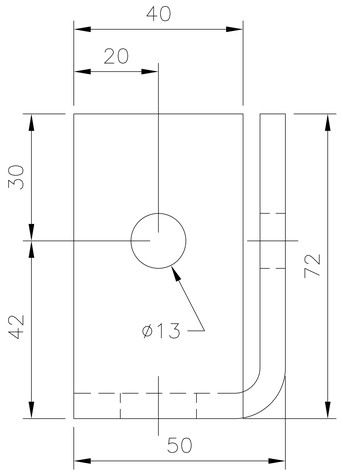

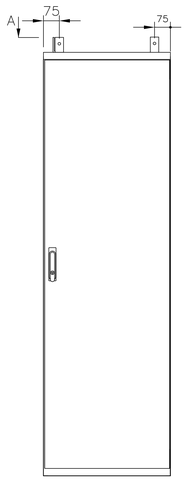

THIS PART BETWEEN OF CABINETS,
IF CUSTOMER USE IT

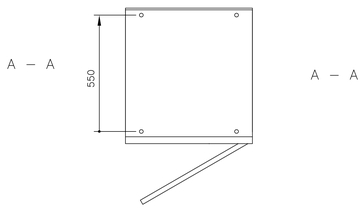

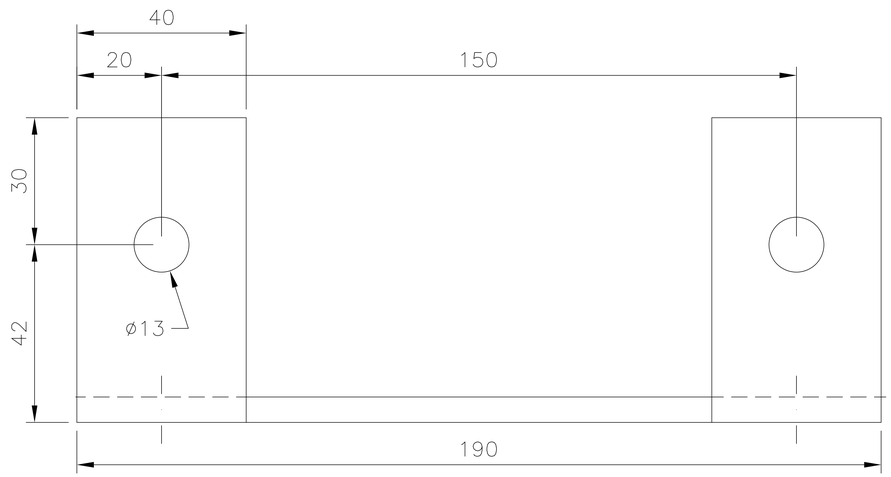

Cust. Doc. No.	Prepared	Title	Dimension drawing EDA1	Item des.	
Customer	Approved		Scale (A3)	Rev.ind.	Lang.
	Project	ABB ABB Drives	Doc. No.		Sheet
ABB Ref. No. Cust Ref. No.					Cont. –

We reserve all rights in this document and in the information contained therein. Reproduction, use or disclosure to third parties without express authority is strictly forbidden. Copr. ABB Automation

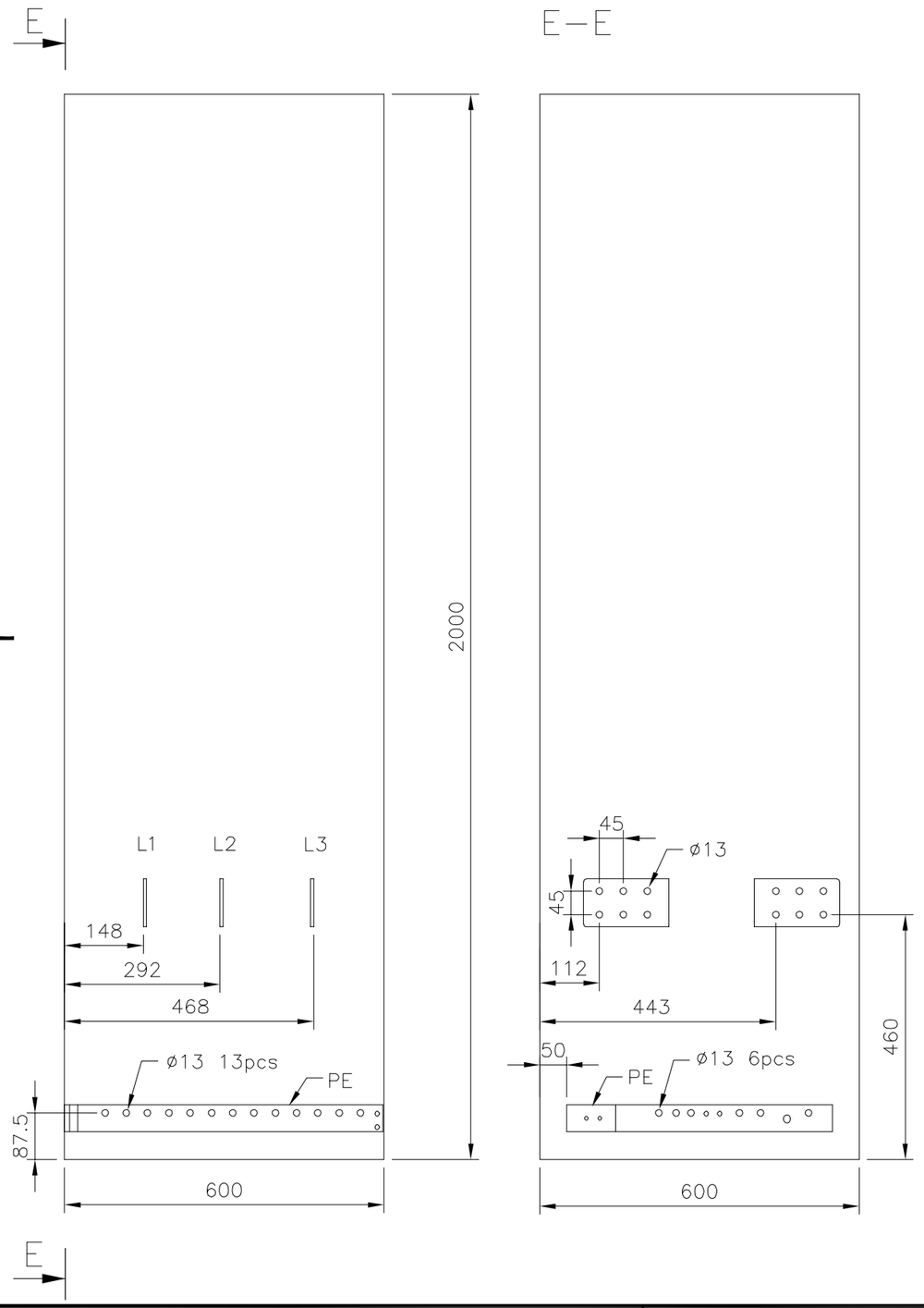

Used in	Location
DSU	+01.2

Cust. Doc. No.	Prepared 2.8.2023	Title ACS880 Multidrives	Dimensional drawing EDA1	Item des.
Customer WMMP	Approved Generated by ADG2		Scale (A3) 10	Rev.ind. .1
	Project Zhaka Jack–up Lift System		Doc. No. –350	Lang. EN
ABB Ref. No. _ Cust Ref. No.	Zhaka Jack–up Lift System–1	ABB Drives		Sheet 350
				Cont. 351

We reserve all rights in this document and in the information contained therein. Reproduction, use or disclosure to third parties without express authority is strictly forbidden. Copr. ABB Automation

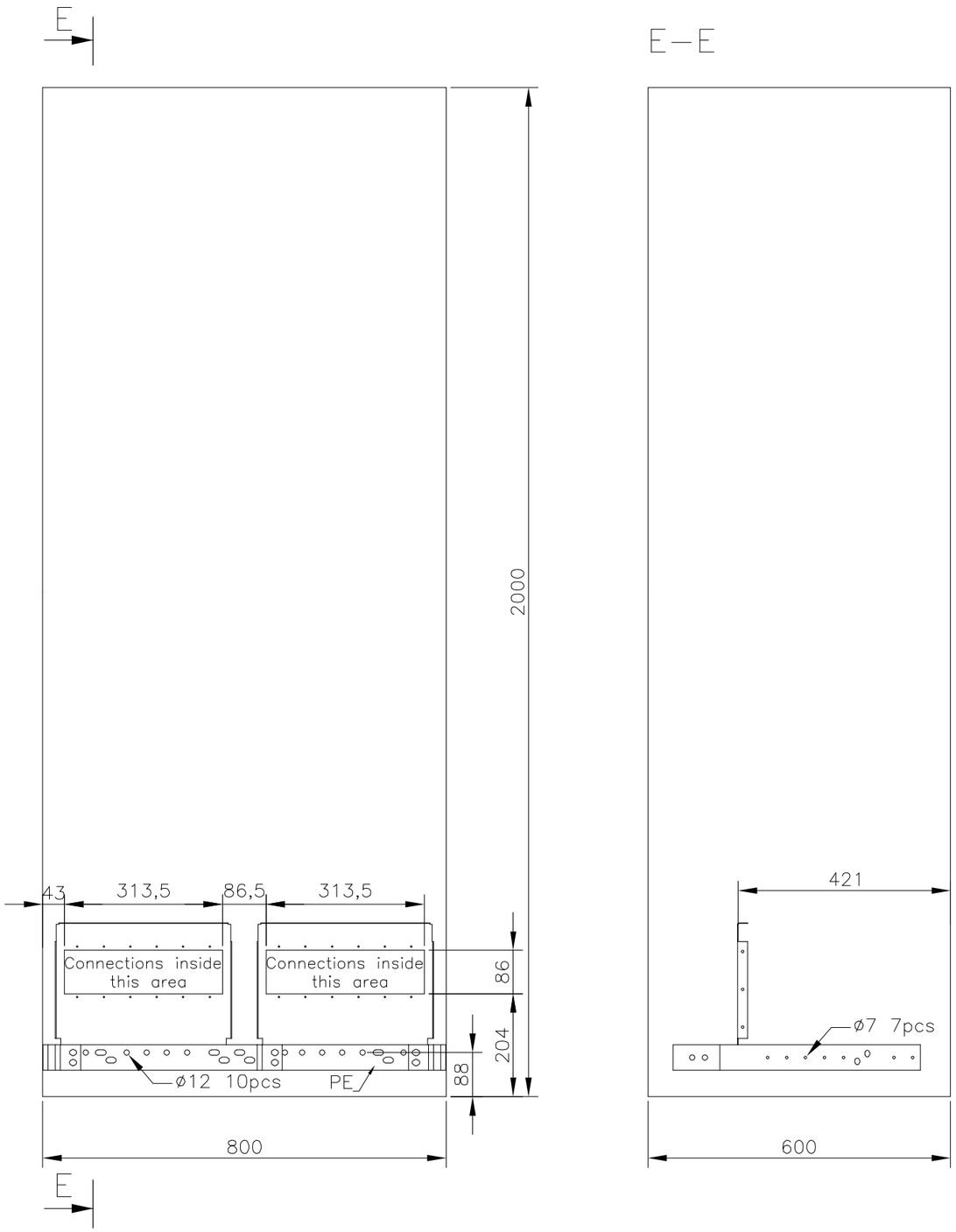

Used in	Location
INV1.01	+1.01.1
INV1.07	+1.07.1
INV2.01	+2.01.1
INV2.07	+2.07.1

Cust. Doc. No.	Prepared 2.8.2023	Title ACS880 Multidrives	Dimensional drawing EDA1	Item des.	
Customer WMMP	Approved Generated by ADG2		Scale (A3) 10	Rev.ind. .1	Lang. EN
	Project Zhaka Jack–up Lift System	ABB Drives	Doc. No. –351		Sheet 351
ABB Ref. No. _ Cust Ref. No.	Zhaka Jack–up Lift System–1				Cont. 352

We reserve all rights in this document and in the information contained therein. Reproduction, use or disclosure to third parties without express authority is strictly forbidden. Copr. ABB Automation

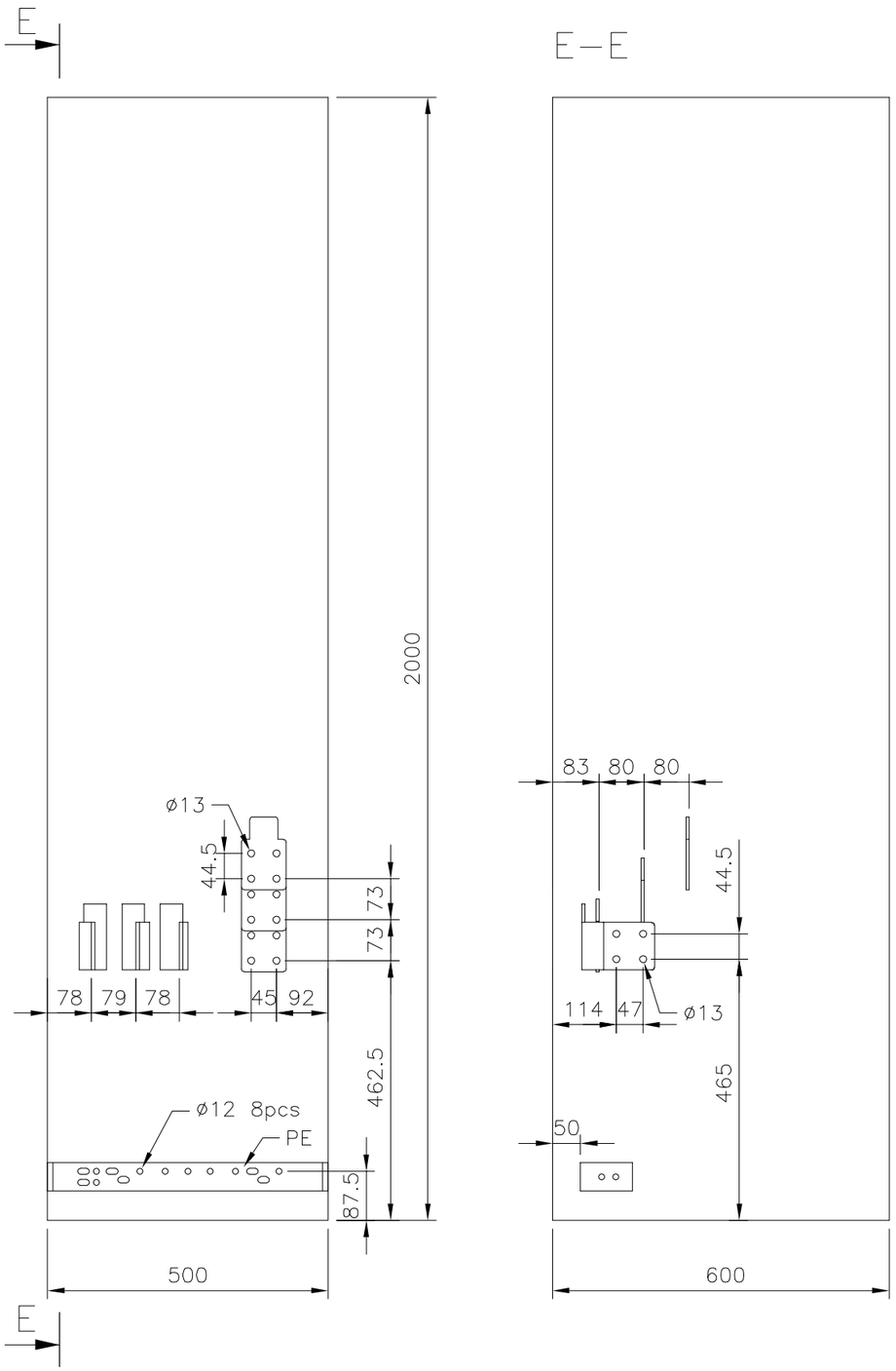

Used in	Location
DBU	+60.1

Cust. Doc. No.	Prepared 2.8.2023	Title ACS880 Multidrives	Dimensional drawing EDA1	Item des.	
Customer WMMP	Approved Generated by ADG2		Scale (A3) 10	Rev.ind. .1	Lang. EN
	Project Zhaka Jack–up Lift System	ABB Drives	Doc. No. –352		Sheet 352
ABB Ref. No. _ Cust Ref. No.	Zhaka Jack–up Lift System–1				Cont. –

ACS880 Multidrives Marine Plates

Project:
Producer order nr. **3ABDC230674**

Material: AOBCA 1,5 Background color:White Text color:Black Font:Arial
Connection by: self-adhesive tape and Screws

Models:

	size L	size H	Char Height	Char per line	Lines
1(A1) Switch board name sign	150	33	20	6	1
2(B1) Switch bay name sign	150	33	6	30	3
3(C1) Apparatur sign	62	13	3.5	17	2
4(D1) Device sing	68	18	3.5	17	2
5(E1) Grounding device sign	52	13	3.5	17	2
6 Drive Main status (cust.specific)	200	33	10*	25*	1*

* = example solution

Kaiverrettevien ruuvikiinnitteisten kilpien mallit

A1 KESKUKSEN TUNNUSKILPI 33 x150.
Kirjainkorkeus 20mm,kirjainleveys normaali
Merkkejä enintään 6kpl.Asennus ensimmäisen kentän tunnuskilpien linjaan.

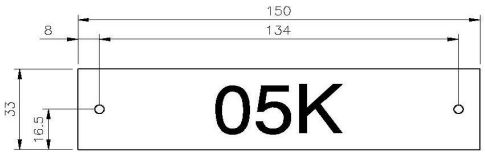

B1 KENTÄN TUNNUSKILPI 33 x150.
Kirjainkorkeus 6mm,kirjainleveys normaali.
Merkkejä enintään 30kpl/rivi x 3 riviä.

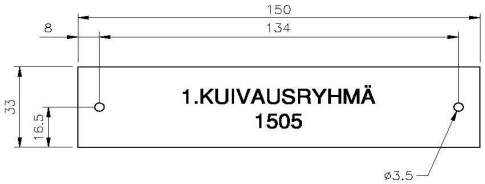

C1 KOJEEN KILPI 13 x 62mm. Kirjainkorkeus 3,5mm.Kirjainleveys normaali.
Merkkejä enintään 17kpl/rivi x 2riviä.

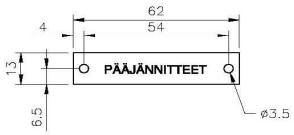

D1 MAADOITUKYTKIMEN LISÄKILPI 18 x 68mm.
Suomi VJ 3451 2183 . Englanti VJ 3451 2191.
Saksa VJ 3451 2205 . Ruotsi VJ 3451 2213.
Kaiverrusohjeen koodi VJ 3451 2132.

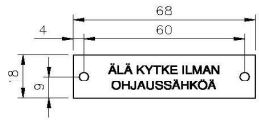

HUOM! Kilpien mittojen toleranssit:
--Ulottumamitat ±0,5mm.
--Reikien mitoitus ±0,2mm.
--Kilven ruuvinreikä Ø3.5mm ±0,2mm.

E1 VIRTA-ASETTELU KILVET
Kaiverrusohje koodi VJ 3451 3341.

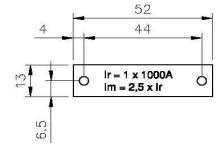

-Kaiverruslevy valkoinen-musta-valkoinen (AOBCA 1,5).
Kaiverretaan pintakerroksen läpi.

TL01	Line	Plate text	Qty	Location
Model 2	1	+01.1	1	+01.1
	2	=01		
	3	ACU		
Model 2	1	+01.2	1	+01.2
	2	=01		
	3	ICU		
Model 2	1	+01.3	1	+01.3
	2	=01		
	3	DSU		
Model 2	1	+1.01.1	1	+1.01.1
	2	=1.01		
	3	INV1.01		
Model 2	1	+1.01.1	1	+1.01.1
	2	=1.02		
	3	INV1.02		
Model 2	1	+1.01.1	1	+1.01.1
	2	=1.03		
	3	INV1.03		
Model 2	1	+1.01.1	1	+1.01.1
	2	=1.04		
	3	INV1.04		
Model 2	1	+1.01.1	1	+1.01.1
	2	=1.05		
	3	INV1.05		
Model 2	1	+1.01.1	1	+1.01.1
	2	=1.06		
	3	INV1.06		
Model 2	1	+1.07.1	1	+1.07.1
	2	=1.07		

TL01	Line	Plate text	Qty	Location
	3	INV1.07		
Model 2	1	+1.07.1	1	+1.07.1
	2	=1.08		
	3	INV1.08		
Model 2	1	+1.07.1	1	+1.07.1
	2	=1.09		
	3	INV1.09		
Model 2	1	+1.07.1	1	+1.07.1
	2	=1.10		
	3	INV1.10		
Model 2	1	+1.07.1	1	+1.07.1
	2	=1.11		
	3	INV1.11		
Model 2	1	+1.07.1	1	+1.07.1
	2	=1.12		
	3	INV1.12		
Model 2	1	+1.07.2	1	+1.07.2
	2	=1.07		
	3	INV1.07		
Model 3	1	CONTROL VOLTAGE	1	+01.2
	2	DISCONNECTION SWITCH		-Q21
Model 3	1	SUPPLY UNIT	1	+01.2
	2	MAIN SWITCH		-Q1.1
Model 3	1	AC VOLTAGE	2	+01.2
	2			-P5.1-2
Model 3	1	AC CURRENT L1	1	+01.2
	2			-P2.1

TL01	Line	Plate text	Qty	Location
Model 3	1	AC CURRENT L1	1	+01.2
	2			-P2.2
Model 3	1	AC VOLTAGE	2	+01.2
	2	SWITCH		-S5.1-2
Model 3	1	TIME COUNTER	1	+01.2
	2			-A30
Model 3	1	LOCAL / REMOTE	1	+01.1
	2			-S30
Model 3	1	SUPPLY UNIT	1	+01.1
	2	MAIN BREAKER CTRL		-S21
Model 3	1	EARTH FAULT	1	+01.1
	2	RESET		-S90
Model 3	1	EMERGENCY STOP RESET	1	+01.1
	2	SUPPLY TRIPPED		-S62
Model 3	1	SUPPLY UNIT	1	+01.1
	2	=01/CDP PANEL		-A59
Model 3	1	INVERTER UNIT	1	+1.01.1
	2	=1.01/CDP PANEL		-A49
Model 3	1	INVERTER UNIT	1	+1.01.1
	2	=1.02/CDP PANEL		-A49
Model 3	1	INVERTER UNIT	1	+1.01.1
	2	=1.03/CDP PANEL		-A49
Model 3	1	INVERTER UNIT	1	+1.01.1
	2	=1.04/CDP PANEL		-A49
Model 3	1	INVERTER UNIT	1	+1.01.1
	2	=1.05/CDP PANEL		-A49
Model 3	1	INVERTER UNIT	1	+1.01.1

TL01	Line	Plate text	Qty	Location
	2	=1.06/CDP PANEL		-A49
Model 3	1	INVERTER UNIT	1	+1.07.1
	2	=1.07/CDP PANEL		-A49
Model 3	1	INVERTER UNIT	1	+1.07.1
	2	=1.08/CDP PANEL		-A49
Model 3	1	INVERTER UNIT	1	+1.07.1
	2	=1.09/CDP PANEL		-A49
Model 3	1	INVERTER UNIT	1	+1.07.1
	2	=1.10/CDP PANEL		-A49
Model 3	1	INVERTER UNIT	1	+1.07.1
	2	=1.11/CDP PANEL		-A49
Model 3	1	INVERTER UNIT	1	+1.07.1
	2	=1.12/CDP PANEL		-A49

TL01	Line	Plate text	Qty	Location
Model 2	1	+2.01.1	1	+2.01.1
	2	=2.01		
	3	INV2.01		
Model 2	1	+2.01.1	1	+2.01.1
	2	=2.02		
	3	INV2.02		
Model 2	1	+2.01.1	1	+2.01.1
	2	=2.03		
	3	INV2.03		
Model 2	1	+2.01.1	1	+2.01.1
	2	=2.04		
	3	INV2.04		
Model 2	1	+2.01.1	1	+2.01.1
	2	=2.05		
	3	INV2.05		
Model 2	1	+2.01.1	1	+2.01.1
	2	=2.06		
	3	INV2.06		
Model 2	1	+2.07.1	1	+2.07.1
	2	=2.07		
	3	INV2.07		
Model 2	1	+2.07.1	1	+2.07.1
	2	=2.08		
	3	INV2.08		
Model 2	1	+2.07.1	1	+2.07.1
	2	=2.09		
	3	INV2.09		
Model 2	1	+2.07.1	1	+2.07.1
	2	=2.10		

TL01	Line	Plate text	Qty	Location
	3	INV2.10		
Model 2	1	+2.07.1	1	+2.07.1
	2	=2.11		
	3	INV2.11		
Model 2	1	+2.07.1	1	+2.07.1
	2	=2.12		
	3	INV2.12		
Model 2	1	+60.1	1	+60.1
	2	=60		
	3	DBU		
Model 3	1	INVERTER UNIT	1	+2.01.1
	2	=2.01/CDP PANEL		-A49
Model 3	1	INVERTER UNIT	1	+2.01.1
	2	=2.02/CDP PANEL		-A49
Model 3	1	INVERTER UNIT	1	+2.01.1
	2	=2.03/CDP PANEL		-A49
Model 3	1	INVERTER UNIT	1	+2.01.1
	2	=2.04/CDP PANEL		-A49
Model 3	1	INVERTER UNIT	1	+2.01.1
	2	=2.05/CDP PANEL		-A49
Model 3	1	INVERTER UNIT	1	+2.01.1
	2	=2.06/CDP PANEL		-A49
Model 3	1	INVERTER UNIT	1	+2.07.1
	2	=2.07/CDP PANEL		-A49
Model 3	1	INVERTER UNIT	1	+2.07.1
	2	=2.08/CDP PANEL		-A49

TL01	Line	Plate text	Qty	Location
Model 3	1	INVERTER UNIT	1	+2.07.1
	2	=2.09/CDP PANEL		-A49
Model 3	1	INVERTER UNIT	1	+2.07.1
	2	=2.10/CDP PANEL		-A49
Model 3	1	INVERTER UNIT	1	+2.07.1
	2	=2.11/CDP PANEL		-A49
Model 3	1	INVERTER UNIT	1	+2.07.1
	2	=2.12/CDP PANEL		-A49
Model 3	1	BRAKE UNIT	1	+60.1
	2	=60/CDP PANEL		-A49

Project: **3ABDC230674**
Producer order nr.

注：503856681合同号下所有3ABDC项目只按此标牌表共加工1套

Material: AOBCA 1,5 Background color:White Text color:Black Font:Arial
Connection by: self-adhesive tape

Models: 21 Switch bay name sign 150 x 33 mm / char. height 6 mm / 35 char. per line / max 3 lines

	Line	Plate text	Qty	Location
Model 21	1 2 3	NO.1 VFD CABINET Of JACKING SYSTEM	1	+01.1 3ABDC230674 订单行号：600
Model 21	1 2 3	NO.2 VFD CABINET Of JACKING SYSTEM	1	+01.1 3ABDC230674 订单行号：700
Model 21	1 2 3	NO.1 VFD CABINET Of JACKING SYSTEM	1	+01.1 3ABDC230674 订单行号：800
Model 21	1 2 3	NO.2 VFD CABINET Of JACKING SYSTEM	1	+01.1 3ABDC230674 订单行号：900

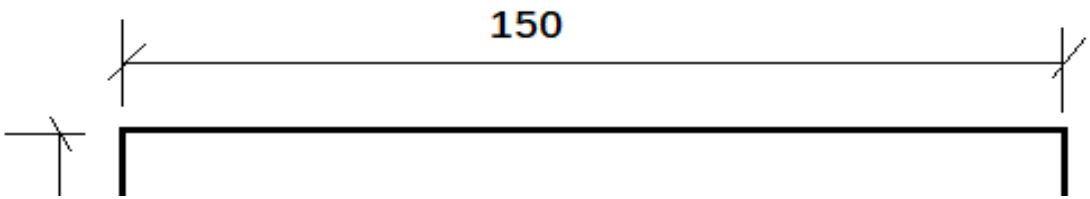

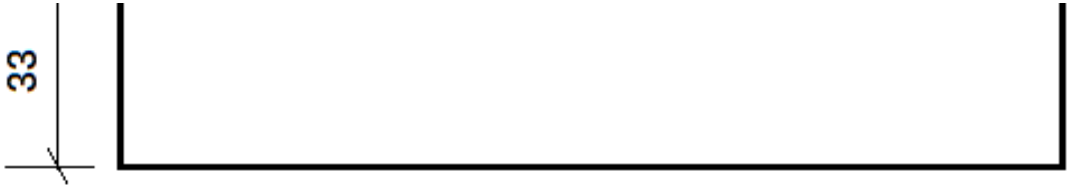
33

Project type	ACS880 Multidrives
Factory SAP order number	3ABDC230674
Project name	Zhaka Jack-up Lift System
Lineup name	Zhaka Jack-up Lift System-1
End customer	WMMP

P345812 / 29711 Used EPLAN version: P8 2023.0.3.19491

Cust. Doc. No.	Prep. Sky-Xin Zhang 02.08.2023	Title TITLE PAGE	Title page EAA	Item Des.	
Cust. Ref. No.	App.		SAP Doc. No.	= COMMON	
Customer WMMP	Project Zhaka Jack-up Lift System		EPLAN Doc. No. 3ABDC230674 - COMMON	+	
	Zhaka Jack-up Lift System-1		ABB Ref. No.	Rev. .1	Sheet 000A
			Resp. Dept.	Cont.	000C

Project interface

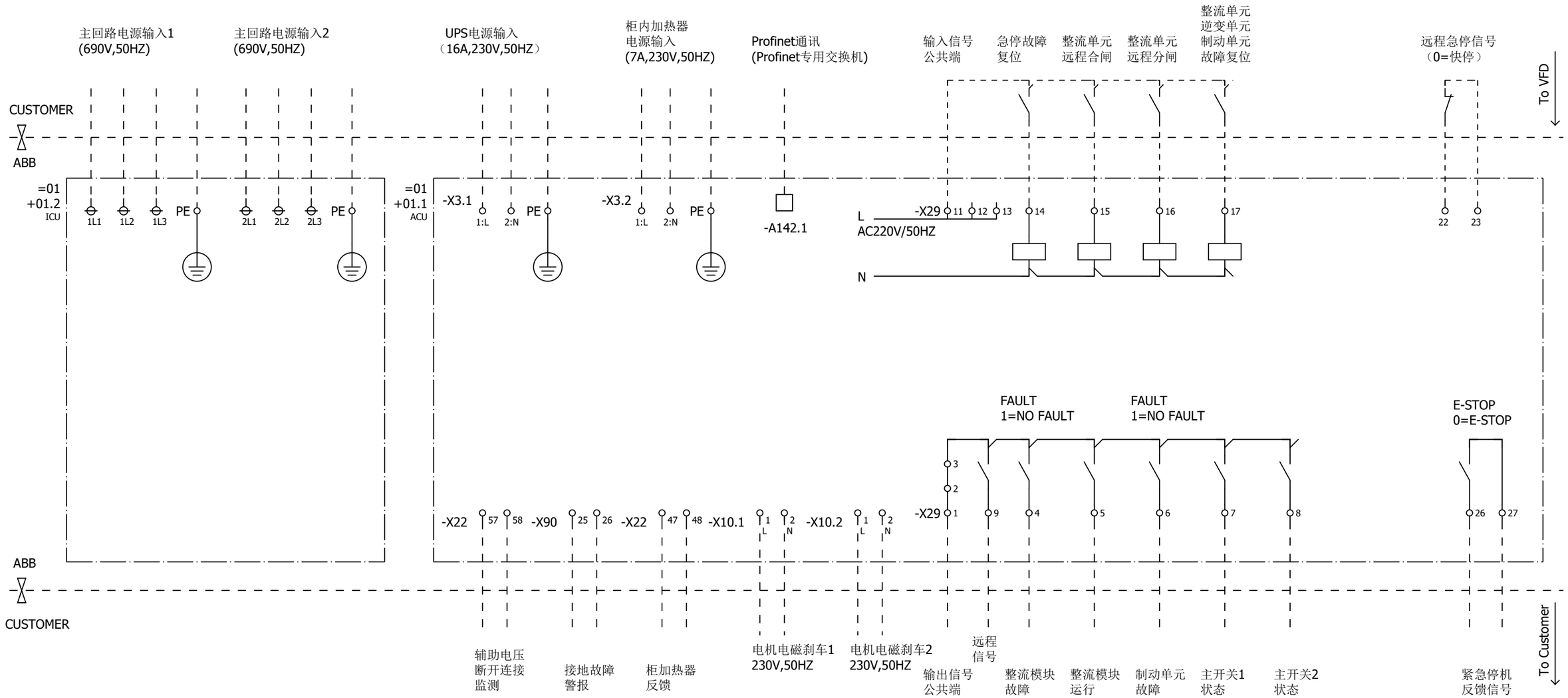

P345812 / 29711

Cust. Doc. No.	Prep. Sky-Xin Zhang 02.08.2023	Title INTERFACE	Circuit diagram EFS2	Item Des.	
Cust. Ref. No.	App.		SAP Doc. No.	= COMMON	
Customer WMMP	Project Zhaka Jack-up Lift System		EPLAN Doc. No. 3ABDC230674 - COMMON	+	
	Zhaka Jack-up Lift System-1		ABB Ref. No.	Rev. .1	Sheet 100E
			Resp. Dept.	Cont.	100F

Project interface

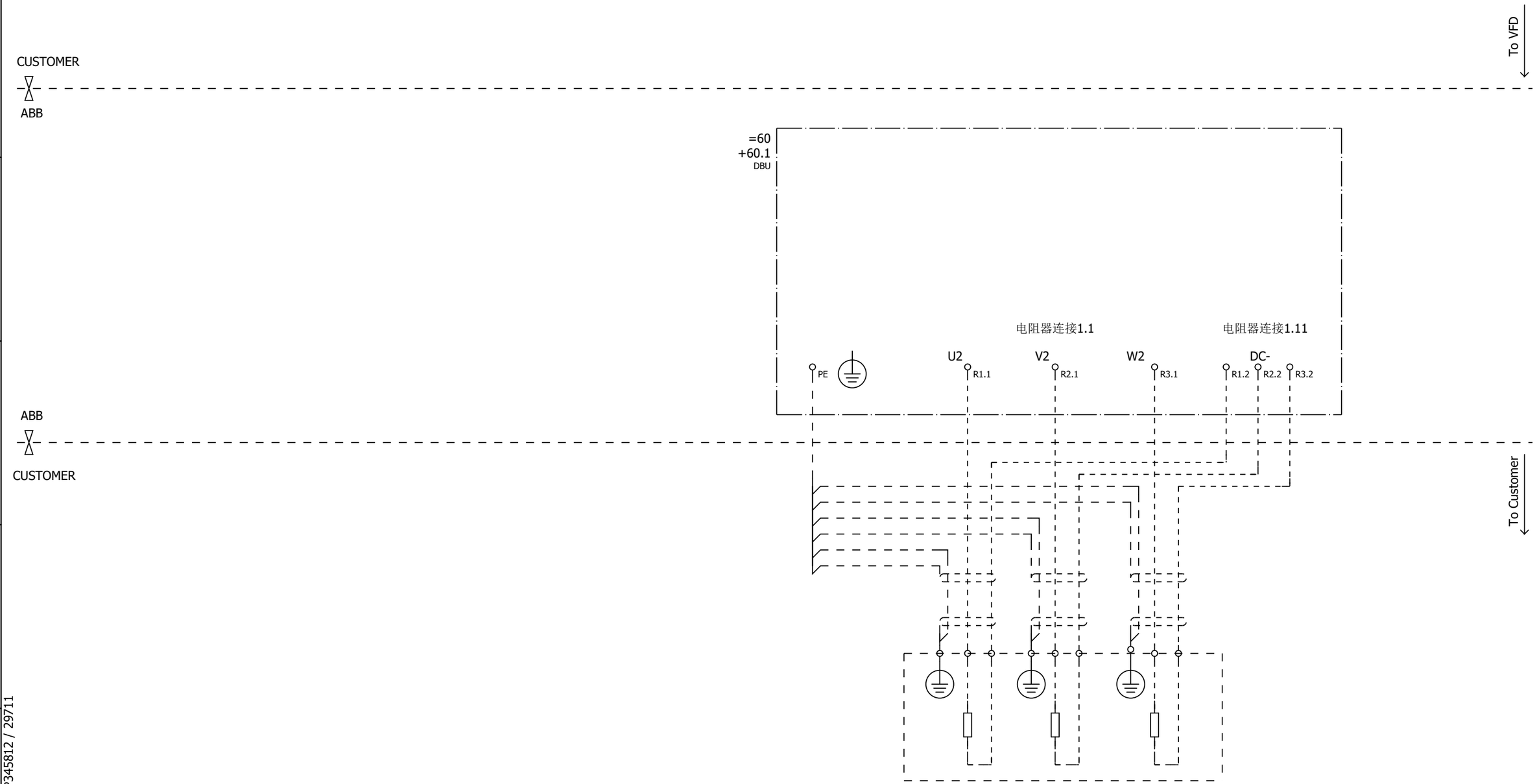

P345812 / 29711

Cust. Doc. No.	Prep. Sky-Xin Zhang 02.08.2023	Title INTERFACE	Circuit diagram EFS2	Item Des.
Cust. Ref. No.	App.		SAP Doc. No.	= COMMON
Customer WMMP	Project Zhaka Jack-up Lift System		EPLAN Doc. No. 3ABDC230674 - COMMON	+
	Zhaka Jack-up Lift System-1	ABB	ABB Ref. No.	Rev. .1 Sheet 100F
			Resp. Dept.	Cont. 100G

Project interface

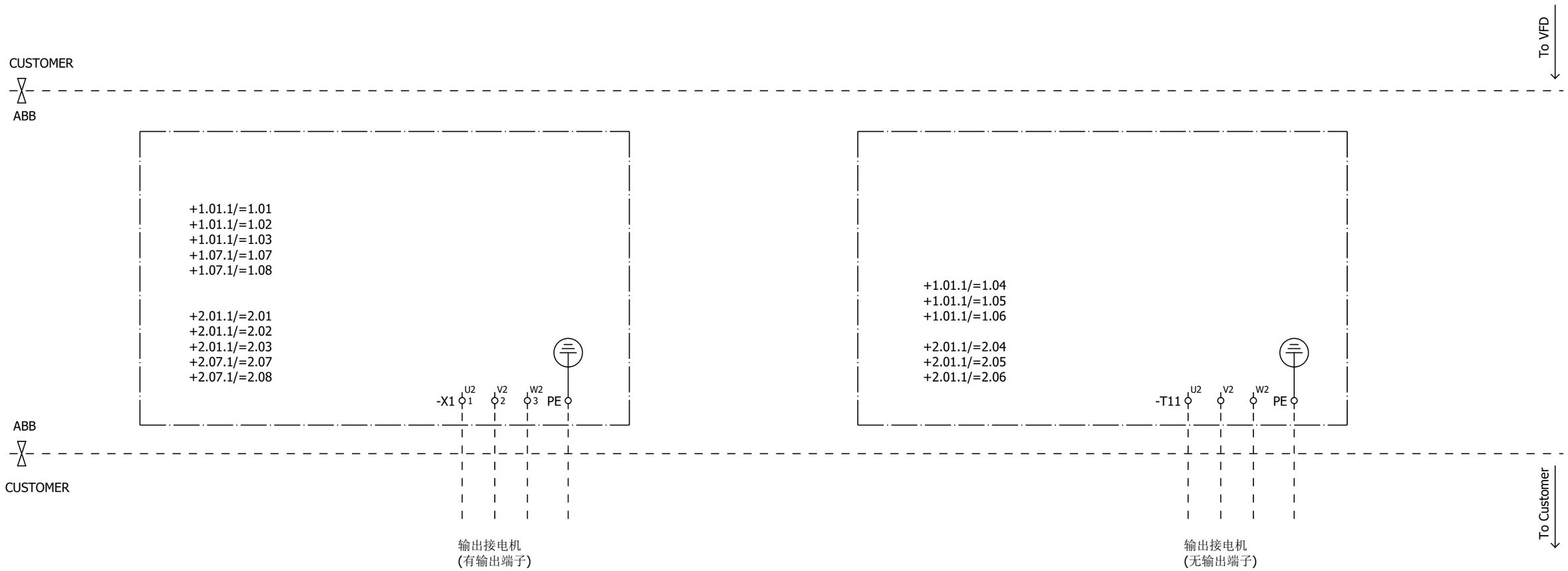

P345812 / 29711

Cust. Doc. No.	Prep. Sky-Xin Zhang 02.08.2023	Title INTERFACE	Circuit diagram EFS2	Item Des.	
Cust. Ref. No.	App.		SAP Doc. No.	= COMMON	
Customer WMMP	Project Zhaka Jack-up Lift System		EPLAN Doc. No. 3ABDC230674 - COMMON	+	
	Zhaka Jack-up Lift System-1	ABB	ABB Ref. No.	Rev. .1	Sheet 100G
			Resp. Dept.	Cont.	100H

Project interface

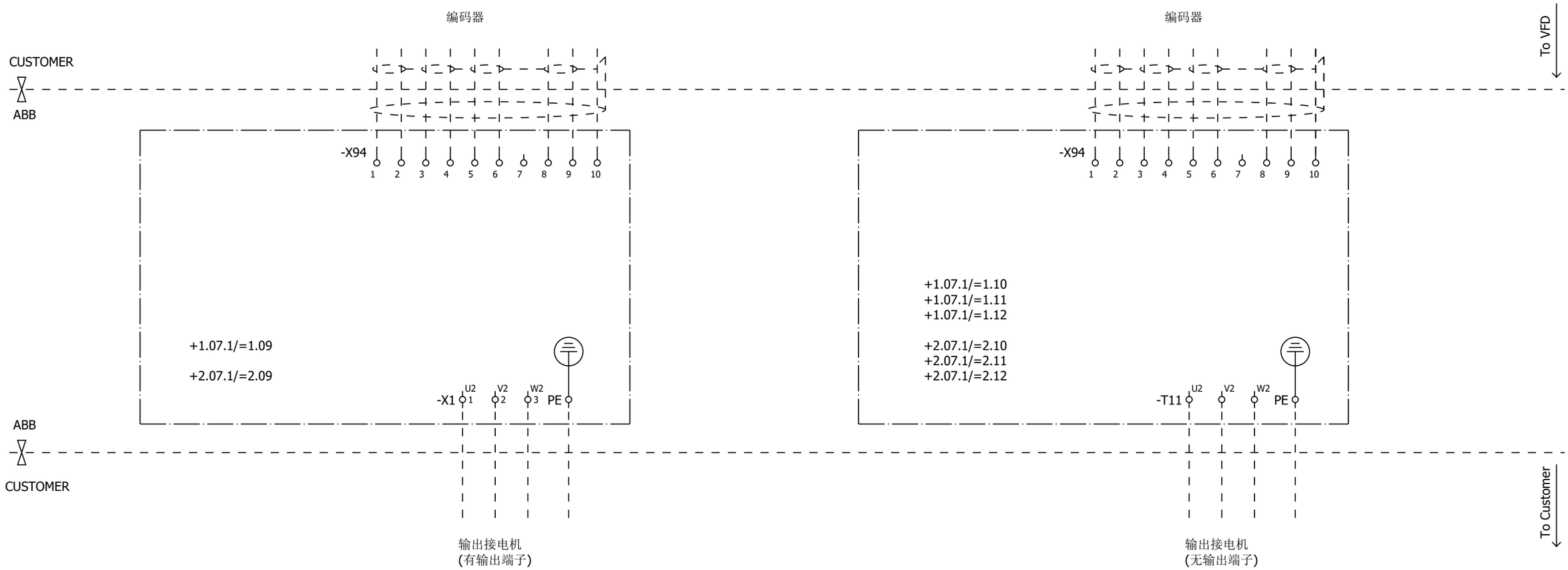

P345812 / 29711

Cust. Doc. No.	Prep. Sky-Xin Zhang 02.08.2023	Title INTERFACE	Circuit diagram EFS2	Item Des.	
Cust. Ref. No.	App.		SAP Doc. No.	= COMMON	
Customer WMMP	Project Zhaka Jack-up Lift System		EPLAN Doc. No. 3ABDC230674 - COMMON	+	
	Zhaka Jack-up Lift System-1	ABB	ABB Ref. No.	Rev. .1	Sheet 100H
			Resp. Dept.	Cont. 260a	

GENERAL/RELAY COIL, WITH PROTECTIVE CIRCUIT DIODE AND R+LED

GENERAL/RELAY COIL

COIL WITH PICK-UP DELAY

COIL WITH OFF-DELAY

NO CONTACT

NC CONTACT

CHANGE OVER CONTACT

NO CONTACT, WITH CLOSING DELAY

TWO NO CONTACTS ONE INPUT, TWO OUTPUTS

TWO CONNECTED CHANGE OVER CONTACTS

POWER NO CONTACT OF A CONTACTOR

PUSH BUTTON WITH NO CONTACT

PUSH BUTTON WITH NC CONTACT

NO SWITCH, OPERATED BY TURNING, 2 POSITIONS

LIMIT SWITCH NC CONTACT MECHANICALLY OPERATED

NC SWITCH, TEMPERATURE OPERATED

EMERGENCY STOP PUSH BUTTON

DISCONNECT SWITCH, THREE-POLE

SWITCH DISCONNECTOR WITH FUSES, THREE-POLE

FUSE

FUSE DISCONNECTOR

CIRCUIT BREAKER

MOTOR OVERLOAD SWITCH WITH SWITCH MECHANISM

COMMON MODE FILTER FOR HIGH FREQUENCY CURRENTS

PROTECTIVE EARTH CONNECTED TO FRAME

PROTECTIVE EARTH CONNECTED TO TERMINAL / PE BUSBAR

FUNCTIONAL EARTHING CONNECTED TO TERMINAL

FUNCTIONAL BONDING TO FRAME

LIGHT

INDUCTOR

CAPACITOR

RESISTOR

POWER RESISTOR WITH FUSE

PHASE SELECTING SWITCH

TRANSFORMER

EMC FILTER

TERMINAL, FOUR POLE

PLUG AND SOCKET TERMINAL BLOCK WITH 4 CONNECTION POINTS

FEMALE AND MALE PLUG

AMPERE METER

CURRENT TRANSFORMER

VOLTAGE METER

WIRE TERMINATION, INSULATED

SHIELDED CABLE

THERMAL OPERATION

DISCONNECT

DISCONNECT, CAN BE OPERATED WHILE NOMINAL CURRENT IS APPLIED

BREAKER, SHORTCIRCUIT BREAKING CAPABILITY

P345812 / 29711

Cust. Doc. No.	Prep. Sky-Xin Zhang 02.08.2023	Title Symbol Overview	Title page EAA
Cust. Ref. No.	App.		SAP Doc. No.
Customer WMMP	Project Zhaka Jack-up Lift System		EPLAN Doc. No. 3ABDC230674 - COMMON
	Zhaka Jack-up Lift System-1		ABB Ref. No. / Resp. Dept.

Item Des. = COMMON +

Rev. .1 Sheet 300A

Cont. 901

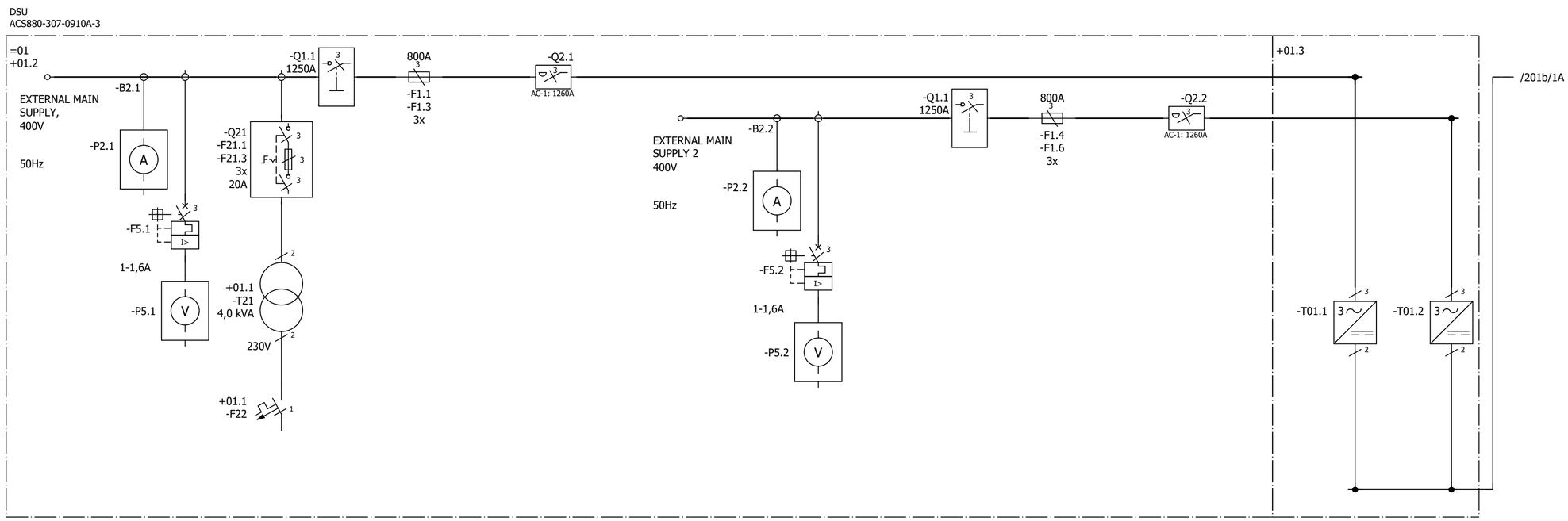

Cust. Doc. No.	Prep. Sky-Xin Zhang 02.08.2023	Title OVERVIEW DIAGRAM	Overview diagram EFA	Item Des.	
Cust. Ref. No.	App.		SAP Doc. No.	= COMMON	
Customer WMMP	Project Zhaka Jack-up Lift System		EPLAN Doc. No.	+	
	Zhaka Jack-up Lift System-1	ABB	ABB Ref. No. 3ABDC230674	Rev. .1	Sheet 201a
			Resp. Dept.		No. of Sheets 5

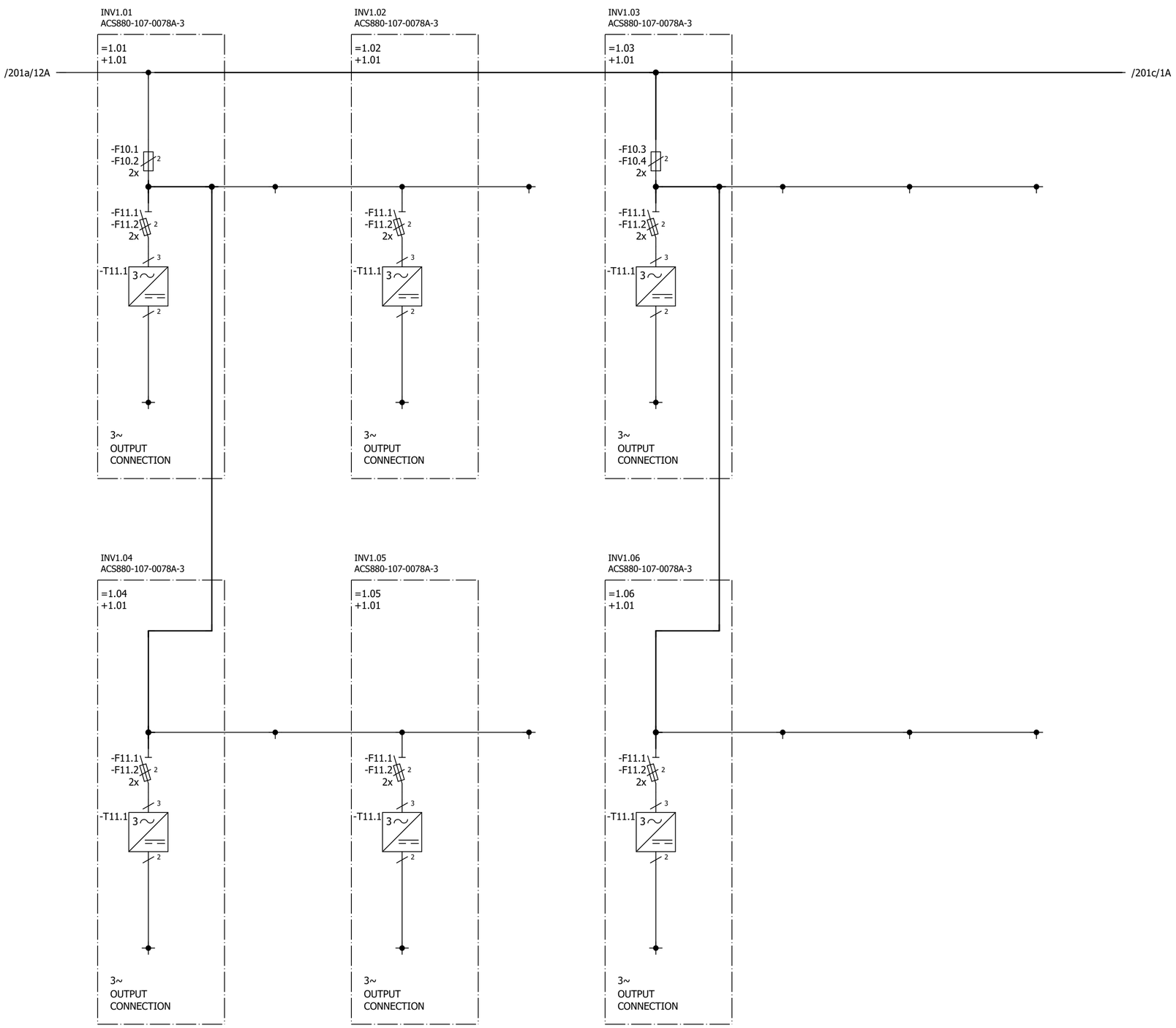

Cust. Doc. No.	Prep. Sky-Xin Zhang 02.08.2023	Title OVERVIEW DIAGRAM	Overview diagram EFA
Cust. Ref. No.	App.		SAP Doc. No.
Customer WMMP	Project Zhaka Jack-up Lift System Zhaka Jack-up Lift System-1		EPLAN Doc. No.
			ABB Ref. No. 3ABDC230674
			Resp. Dept.

Item Des.
= COMMON
+

Rev. .1 Sheet 201b
No. of Sheets 5

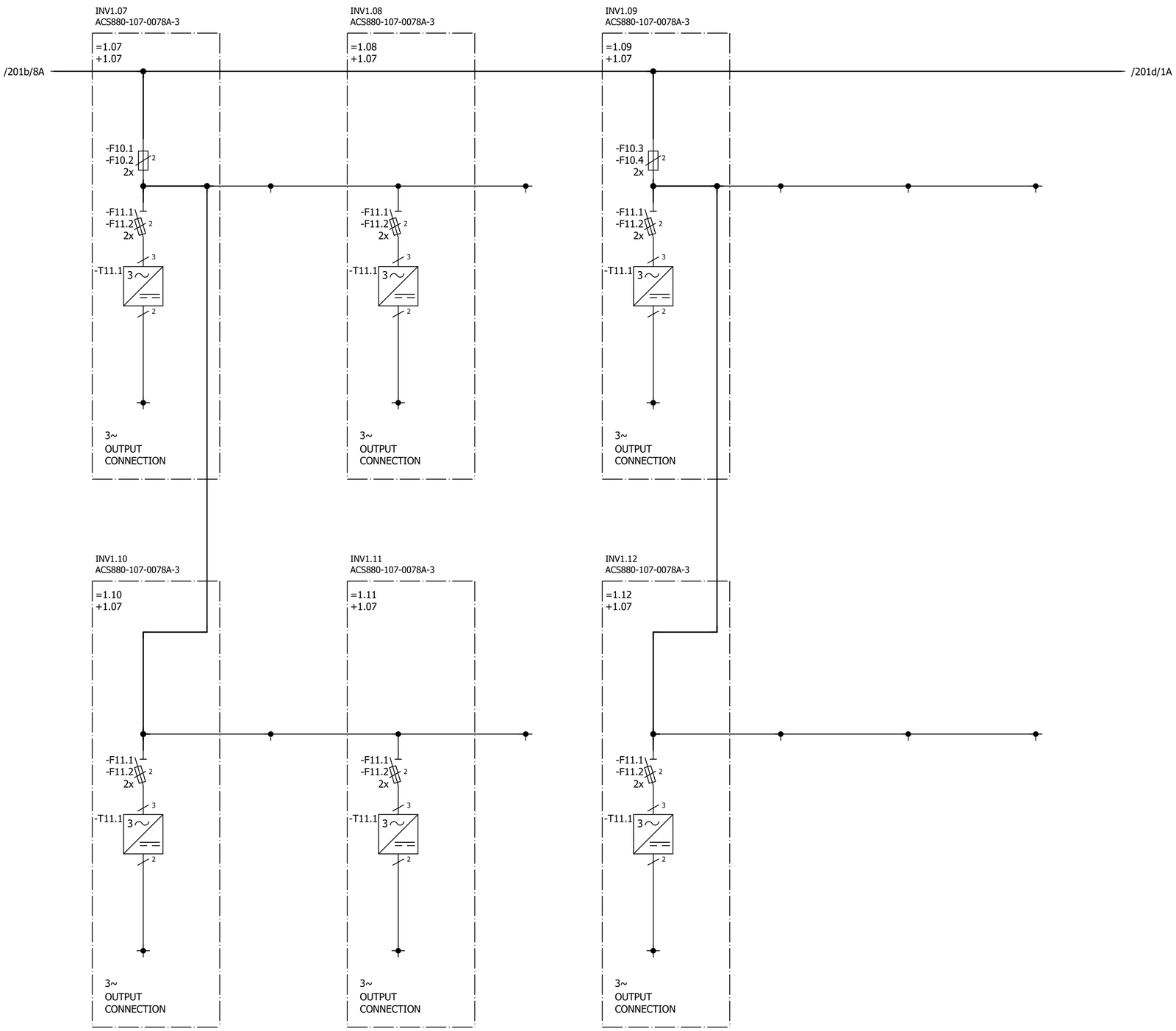

Cust. Doc. No.	Prep. Sky-Xin Zhang 02.08.2023	Title OVERVIEW DIAGRAM	Overview diagram EFA
Cust. Ref. No.	App.		SAP Doc. No.
Customer WMMP	Project Zhaka Jack-up Lift System Zhaka Jack-up Lift System-1		EPLAN Doc. No.
			ABB Ref. No. 3ABDC230674
			Resp. Dept.

Item Des.
= COMMON
+

Rev. .1 Sheet 201c
No. of Sheets 5

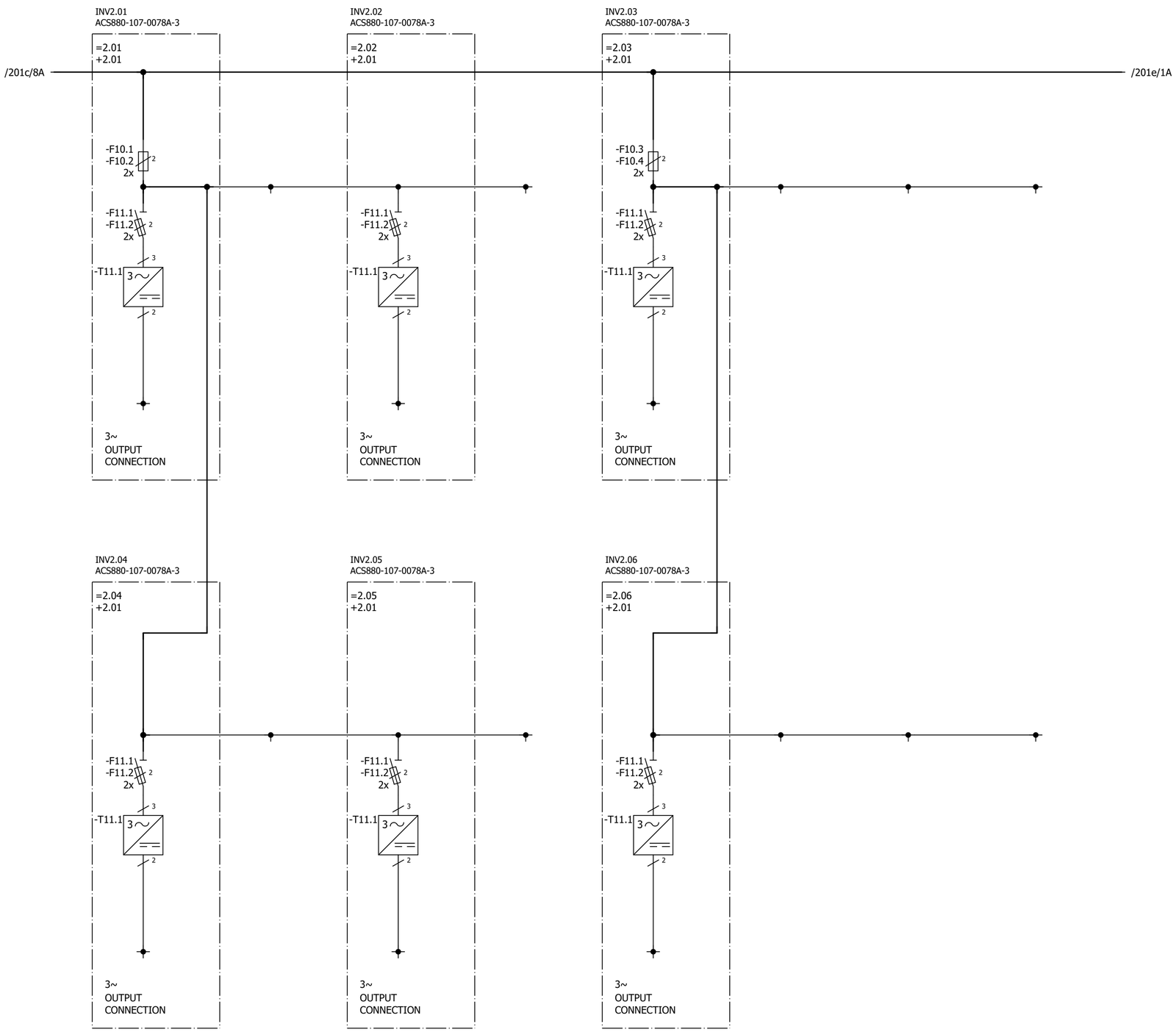

Cust. Doc. No.	Prep. Sky-Xin Zhang 02.08.2023	Title OVERVIEW DIAGRAM	Overview diagram EFA
Cust. Ref. No.	App.		SAP Doc. No.
Customer WMMP	Project Zhaka Jack-up Lift System Zhaka Jack-up Lift System-1		EPLAN Doc. No.
			ABB Ref. No. 3ABDC230674
			Resp. Dept.

Item Des.
= COMMON
+

Rev. .1 Sheet 201d
No. of Sheets 5

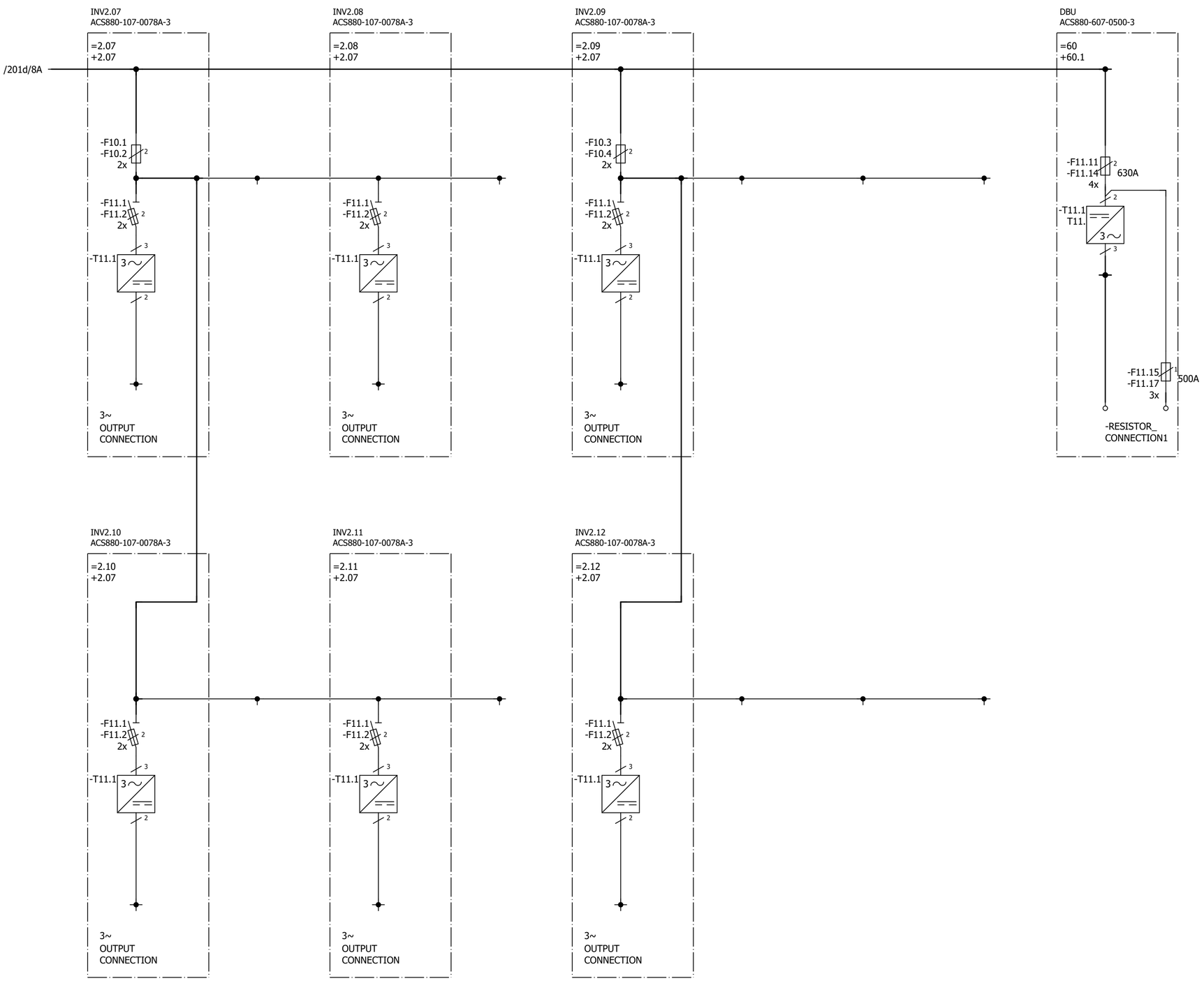

Cust. Doc. No.	Prep. Sky-Xin Zhang 02.08.2023	Title OVERVIEW DIAGRAM	Overview diagram EFA
Cust. Ref. No.	App.		SAP Doc. No.
Customer WMMP	Project Zhaka Jack-up Lift System Zhaka Jack-up Lift System-1		EPLAN Doc. No.
			ABB Ref. No. 3ABDC230674
			Resp. Dept.

Item Des.
= COMMON
+

Rev. .1 Sheet 201e
No. of Sheets 5

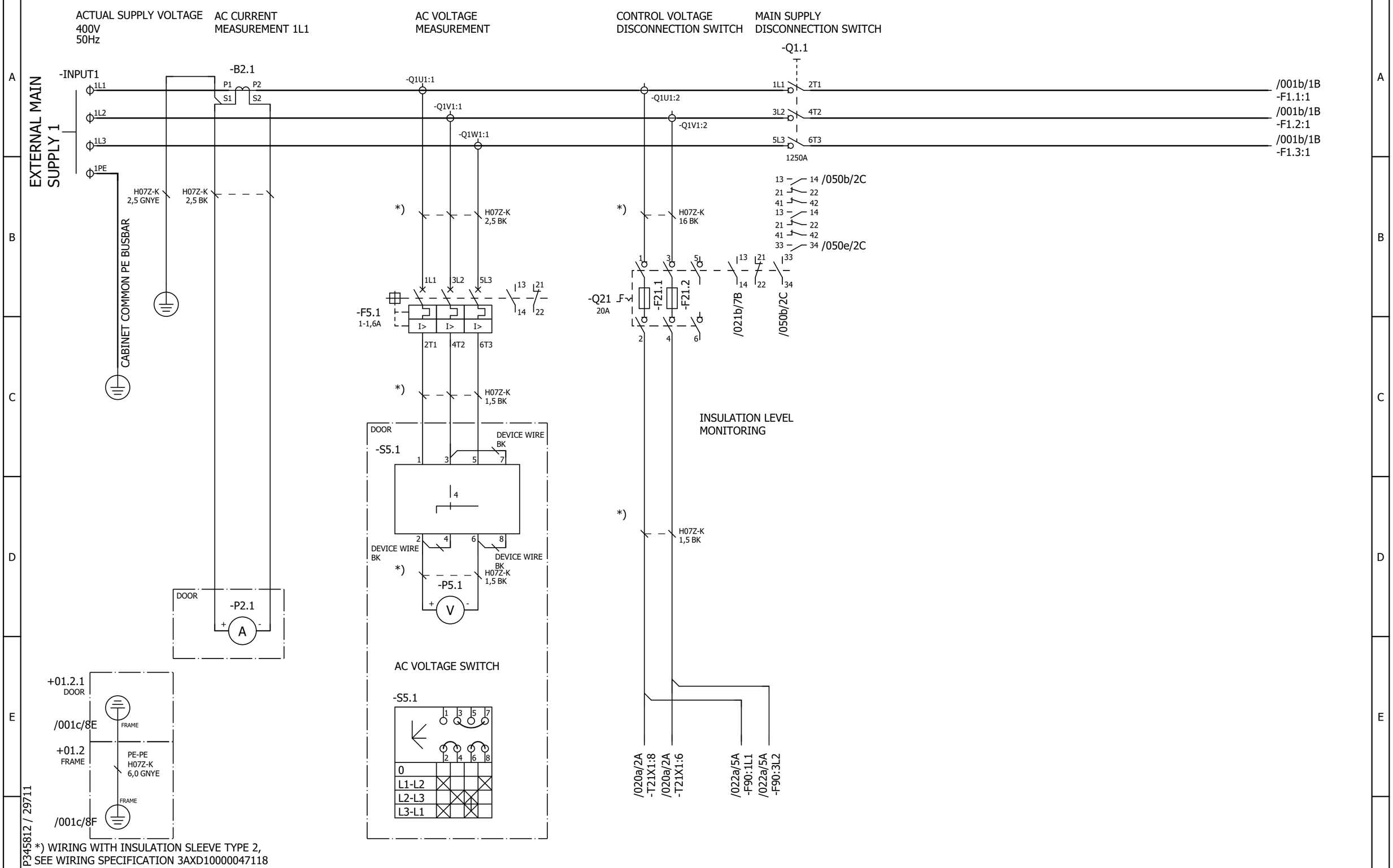

Cust. Doc. No.	Prep. Sky-Xin Zhang 02.08.2023	Title MAIN CIRCUIT DSU ACS880-307-0910A-3 400V 50 Hz IP22	Circuit diagram EFS2	Item Des.	
Cust. Ref. No.	App.		SAP Doc. No.	= 01 + 01.2	
Customer WMMP	Project Zhaka Jack-up Lift System Zhaka Jack-up Lift System-1		EPLAN Doc. No. 3ABDC230674 - 01		
			ABB Ref. No.	Rev. .1	Sheet 001a
			Resp. Dept.	Cont.	001b

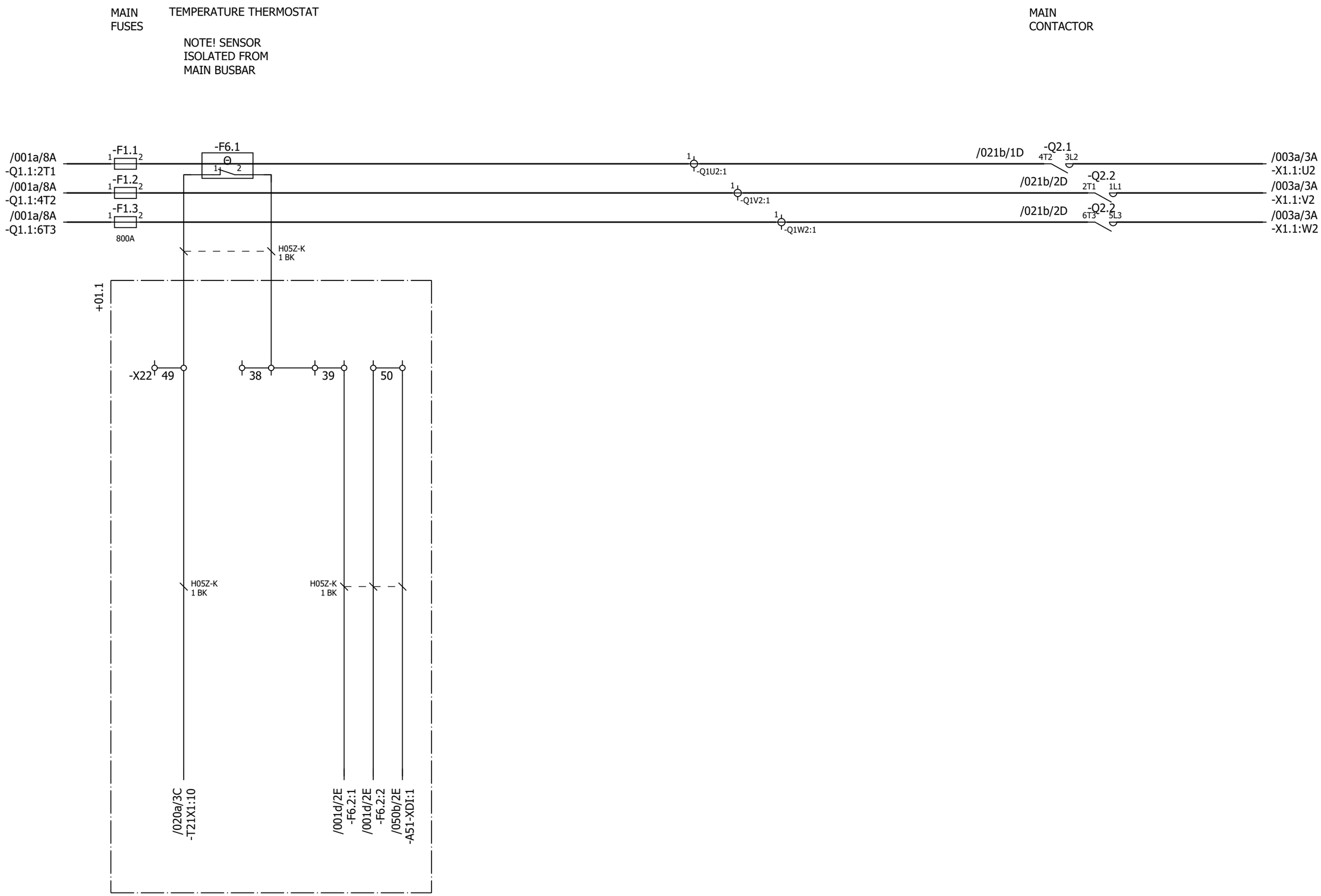

P345812 / 29711

*) WIRING WITH INSULATION SLEEVE TYPE 2, SEE WIRING SPECIFICATION 3AXD10000047118

Cust. Doc. No.	Prep. Sky-Xin Zhang 02.08.2023	Title MAIN CIRCUIT DSU ACS880-307-0910A-3 400V 50 Hz IP22	Circuit diagram EFS2
Cust. Ref. No.	App.		SAP Doc. No.
Customer WMMP	Project Zhaka Jack-up Lift System Zhaka Jack-up Lift System-1		EPLAN Doc. No. 3ABDC230674 - 01
			ABB Ref. No.
			Resp. Dept.

Item Des. = 01 + 01.2

Rev. .1 Sheet 001b

Cont. 001c

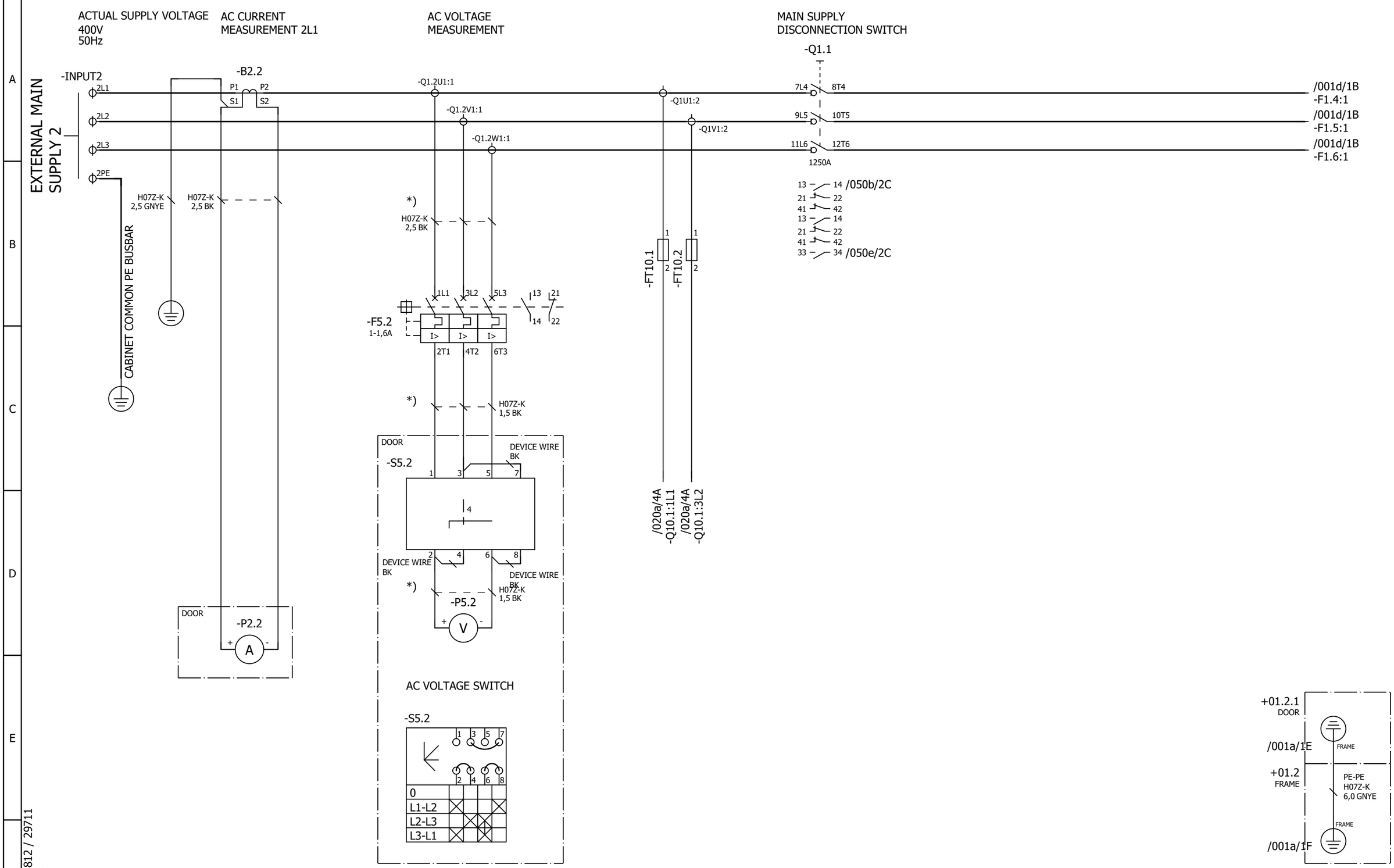

P345812 / 29711

*) WIRING WITH INSULATION SLEEVE TYPE 2,
SEE WIRING SPECIFICATION 3AXD10000047118

Cust. Doc. No.	Prep. Sky-Xin Zhang 02.08.2023	Title MAIN CIRCUIT	Circuit diagram EFS2	Item Des.	
Cust. Ref. No.	App.	DSU	SAP Doc. No.	= 01	
Customer WMMP	Project Zhaka Jack-up Lift System	ACS880-307-0910A-3	EPLAN Doc. No. 3ABDC230674 - 01	+ 01.2	
	Zhaka Jack-up Lift System-1	400V 50 Hz IP22	ABB Ref. No.	Rev. .1	Sheet 001c
			Resp. Dept.	Cont.	001d

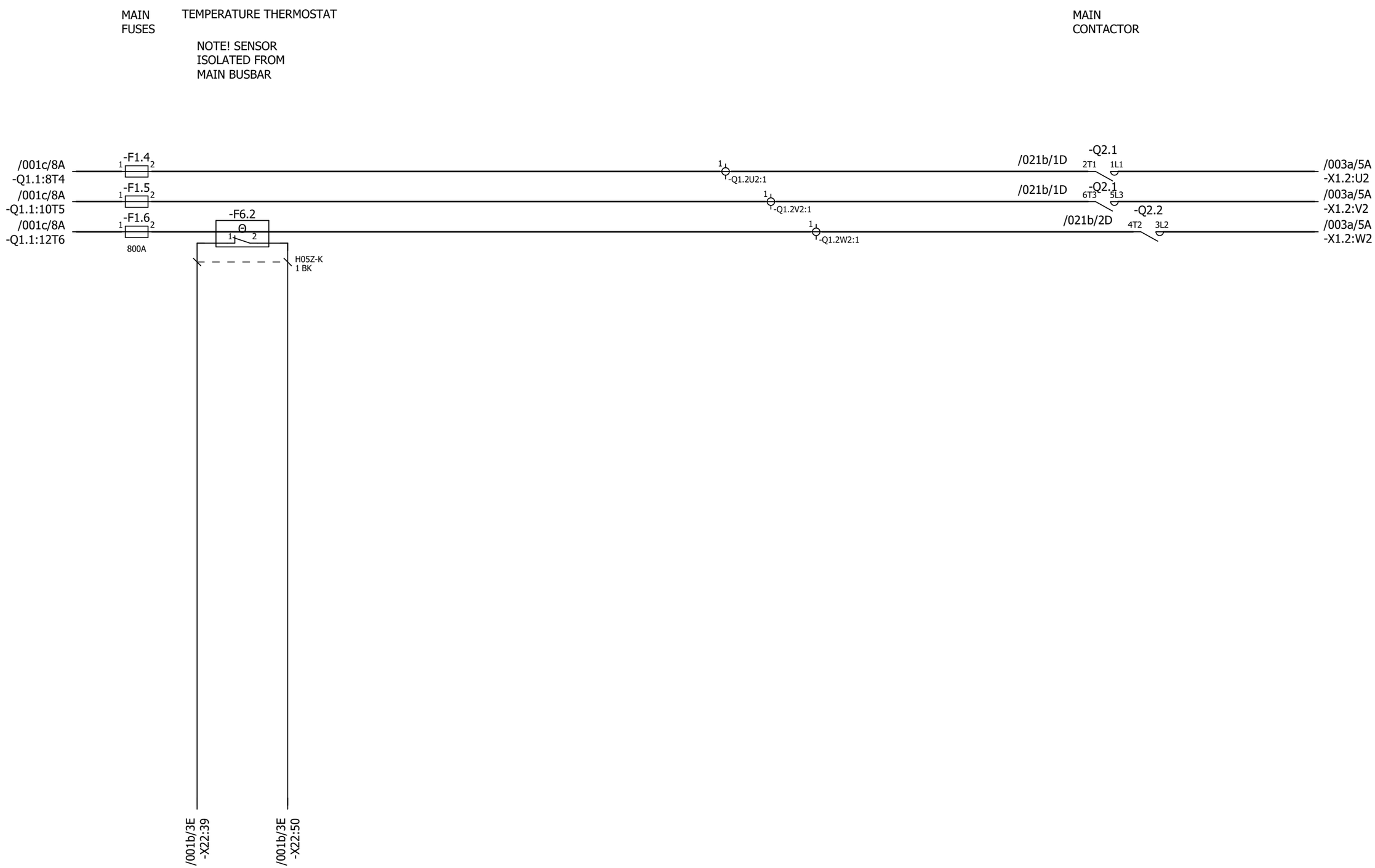

P345812 / 29711

*) WIRING WITH INSULATION SLEEVE TYPE 2, SEE WIRING SPECIFICATION 3AXD10000047118

Cust. Doc. No.	Prep. Sky-Xin Zhang 02.08.2023	Title MAIN CIRCUIT DSU ACS880-307-0910A-3 400V 50 Hz IP22	Circuit diagram EFS2
Cust. Ref. No.	App.		SAP Doc. No.
Customer WMMP	Project Zhaka Jack-up Lift System Zhaka Jack-up Lift System-1		EPLAN Doc. No. 3ABDC230674 - 01
			ABB Ref. No.
			Resp. Dept.

Item Des.
= 01
+ 01.2

Rev. .1 Sheet 001d
Cont. 003a

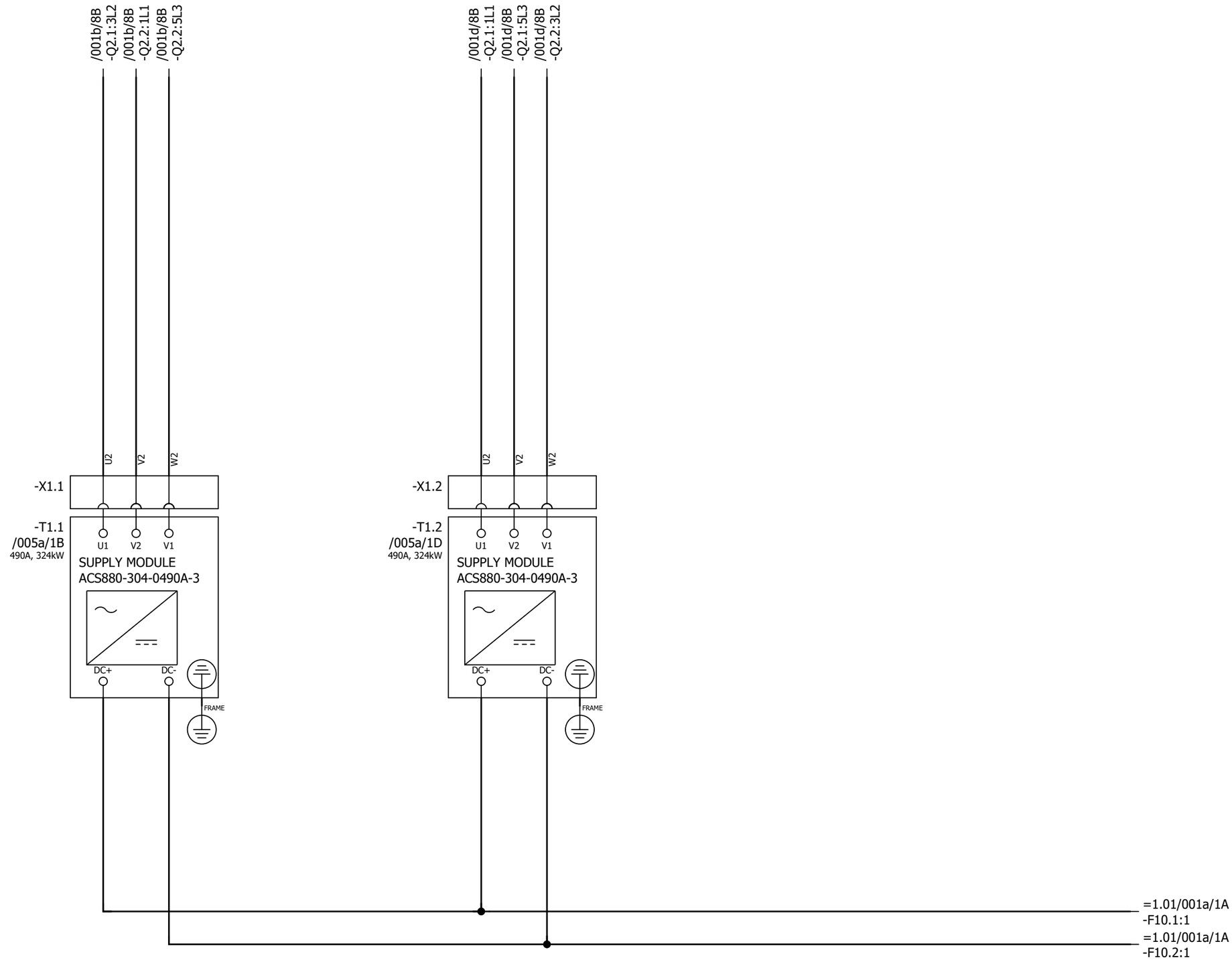

P345812 / 29711

Cust. Doc. No.	Prep. Sky-Xin Zhang 02.08.2023	Title MAIN CIRCUIT	Circuit diagram EFS2	Item Des.	
Cust. Ref. No.	App.	DSU	SAP Doc. No.	= 01	
Customer WMMP	Project Zhaka Jack-up Lift System	ACS880-307-0910A-3	EPLAN Doc. No. 3ABDC230674 - 01	+ 01.3	
	Zhaka Jack-up Lift System-1	400V 50 Hz IP22	ABB Ref. No.	Rev. .1	Sheet 003a
			Resp. Dept.	Cont.	005a

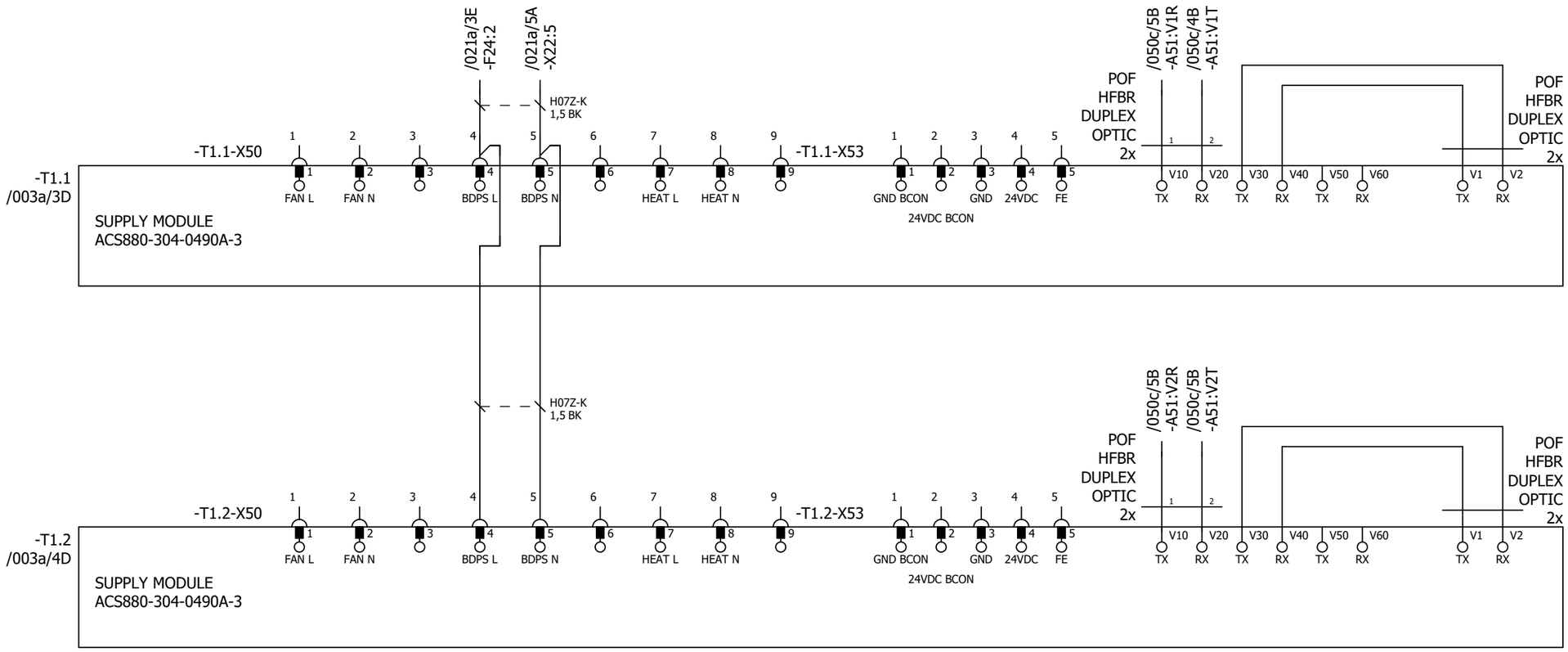

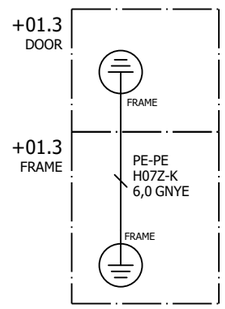

P345812 / 29711

Cust. Doc. No.	Prep. Sky-Xin Zhang 02.08.2023	Title MODULE CONTROL CONNECTIONS	Circuit diagram EFS2
Cust. Ref. No.	App.	DSU	SAP Doc. No.
Customer WMMP	Project Zhaka Jack-up Lift System	ACS880-307-0910A-3	EPLAN Doc. No. 3ABDC230674 - 01
	Zhaka Jack-up Lift System-1	400V 50 Hz IP22	ABB Ref. No.
			Resp. Dept.

Item Des.
= 01
+ 01.3

Rev. .1 Sheet 005a
Cont. 020a

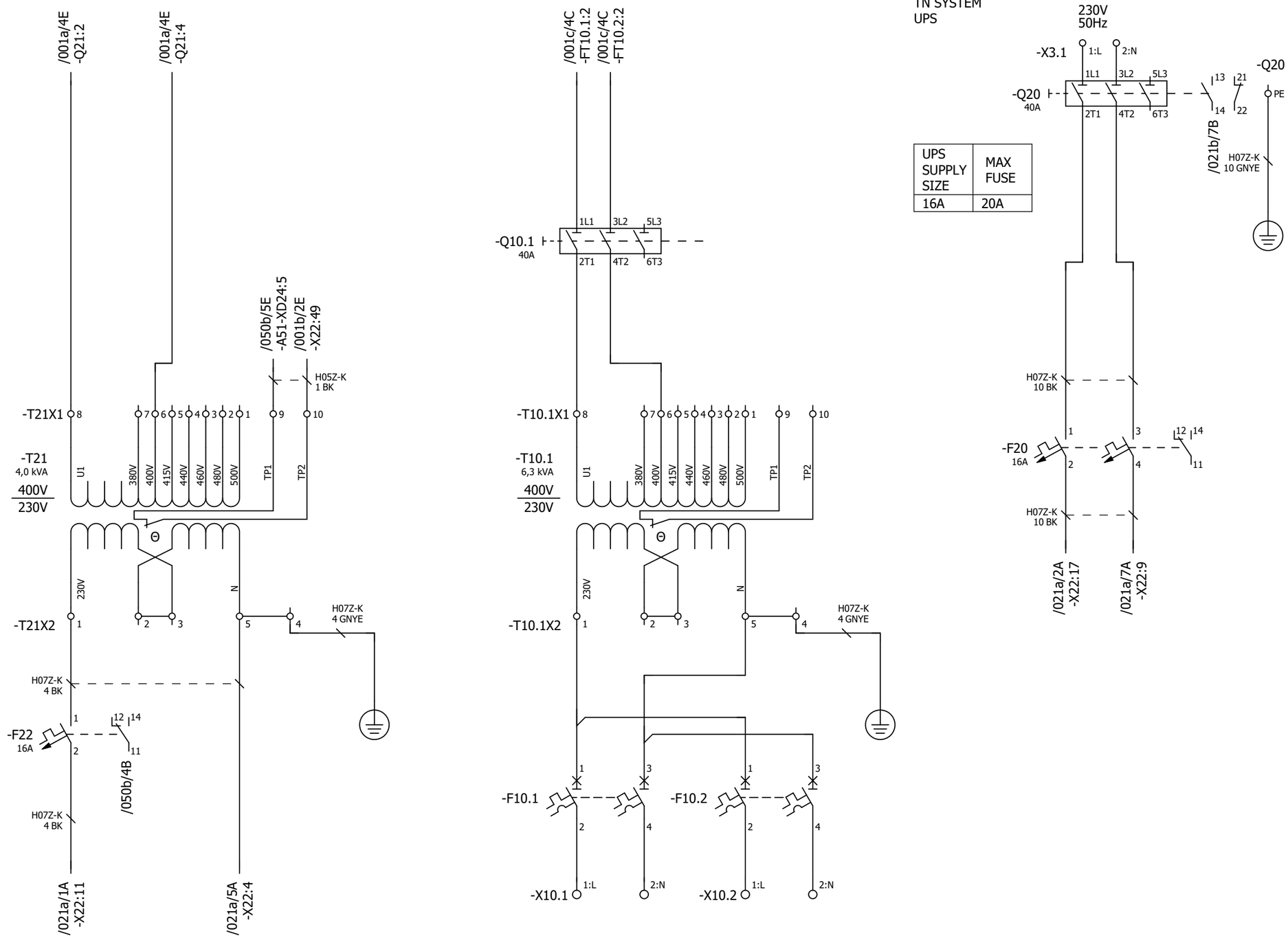

UPS SUPPLY SIZE	MAX FUSE
16A	20A

P345812 / 29711

*) WIRING WITH INSULATION SLEEVE (IS) SEE NOTE 1

1) NOTE TYPE 2 SEE WIRING SPECIFICATION 3AXD10000047118

Cust. Doc. No.	Prep. Sky-Xin Zhang 02.08.2023	Title AUXILIARY VOLTAGE DSU ACS880-307-0910A-3 400V 50 Hz IP22	Circuit diagram EFS2
Cust. Ref. No.	App.		SAP Doc. No.
Customer WMMP	Project Zhaka Jack-up Lift System		EPLAN Doc. No. 3ABDC230674 - 01
	Zhaka Jack-up Lift System-1		ABB Ref. No.
			Resp. Dept.

Item Des. = 01 + 01.1

Rev. .1 Sheet 020a

Cont. 021a

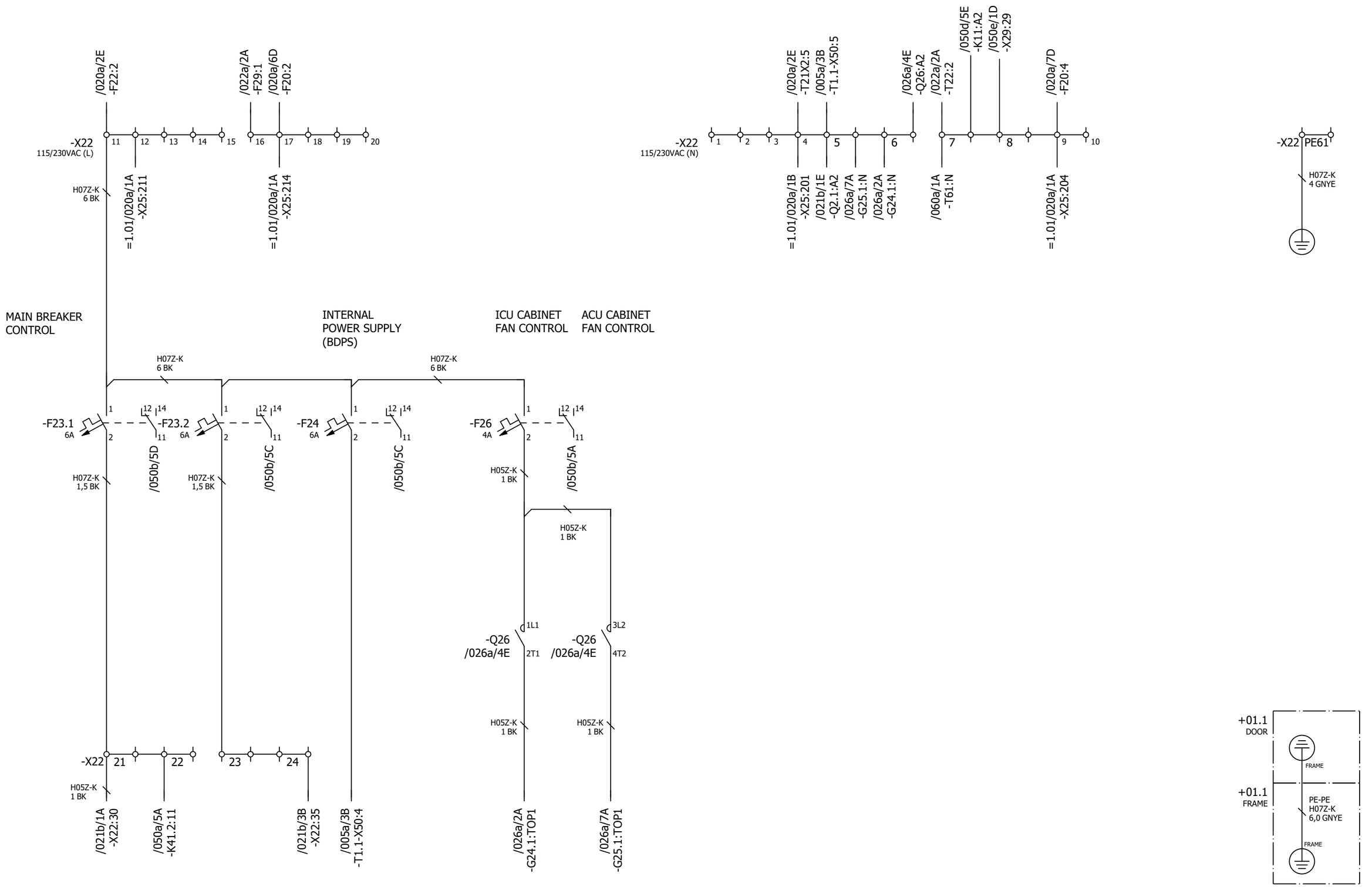

Cust. Doc. No.	Prep. Sky-Xin Zhang 02.08.2023	Title AUXILIARY VOLTAGE DSU ACS880-307-0910A-3 400V 50 Hz IP22	Circuit diagram EFS2
Cust. Ref. No.	App.		SAP Doc. No.
Customer WMMP	Project Zhaka Jack-up Lift System Zhaka Jack-up Lift System-1		EPLAN Doc. No. 3ABDC230674 - 01
			ABB Ref. No.
			Resp. Dept.

Item Des.
= 01
+ 01.1

Rev. .1 Sheet 021a
Cont. 021b

AUXILIARY VOLTAGE
DISCONNECT
MONITORING

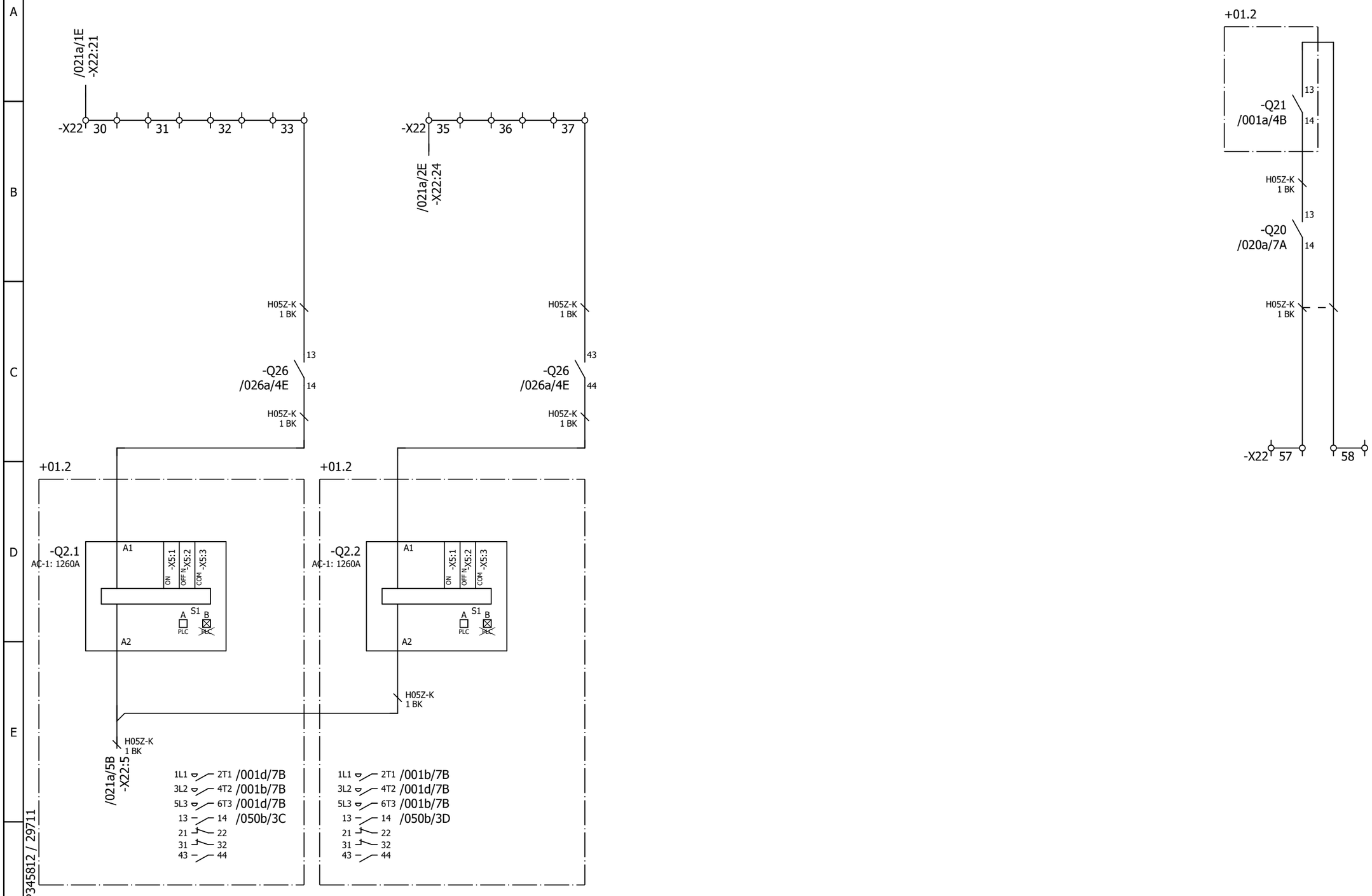

Cust. Doc. No.	Prep. Sky-Xin Zhang 02.08.2023	Title AUXILIARY VOLTAGE	Circuit diagram EFS2	Item Des.	
Cust. Ref. No.	App.	DSU	SAP Doc. No.	= 01	
Customer WMMP	Project Zhaka Jack-up Lift System	ACS880-307-0910A-3	EPLAN Doc. No. 3ABDC230674 - 01	+ 01.1	
	Zhaka Jack-up Lift System-1	400V 50 Hz IP22	ABB Ref. No.	Rev. .1	Sheet 021b
			Resp. Dept.	Cont.	022a

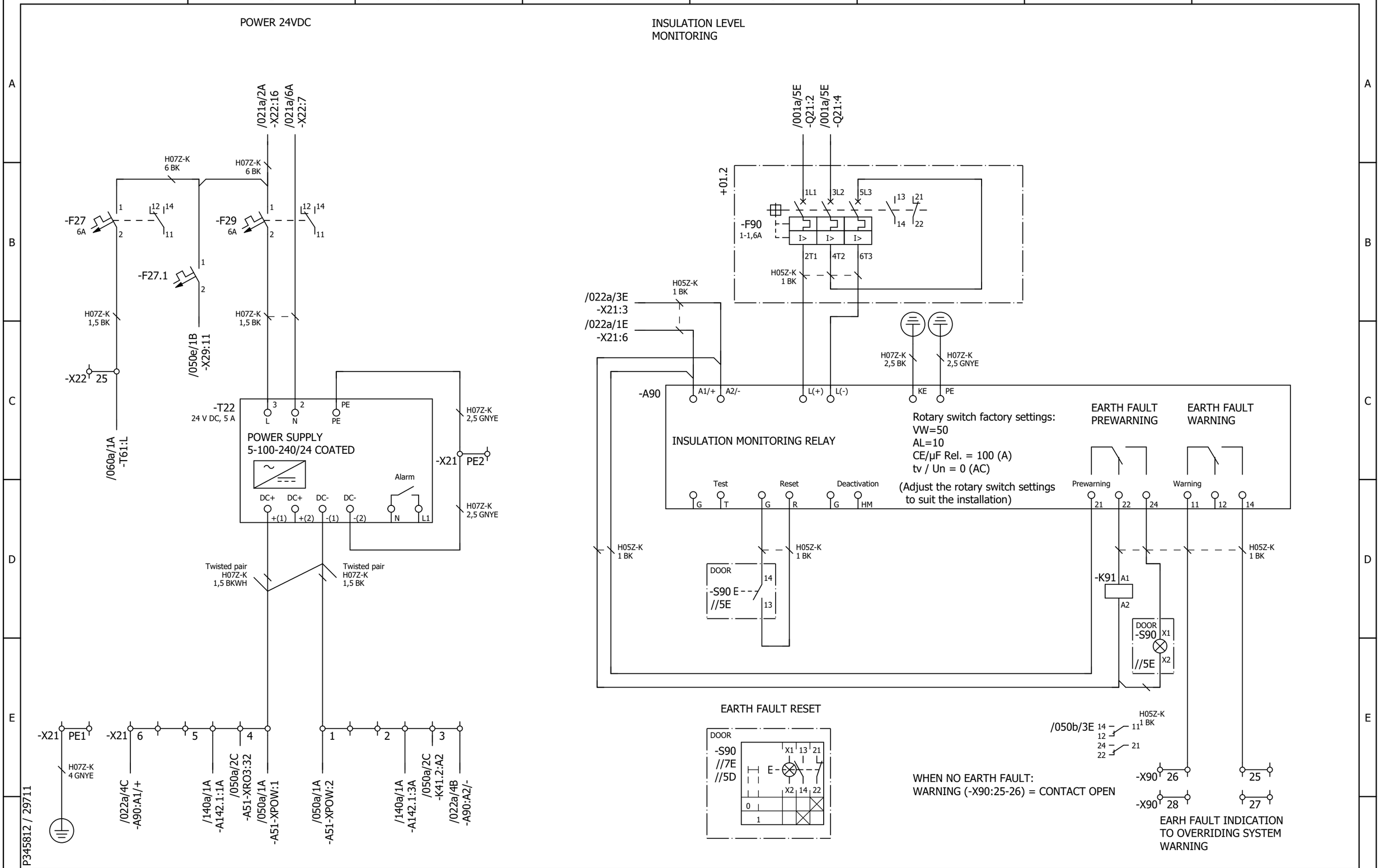

Cust. Doc. No.	Prep. Sky-Xin Zhang 02.08.2023	Title AUXILIARY VOLTAGE DSU ACS880-307-0910A-3 400V 50 Hz IP22	Circuit diagram EFS2	Item Des. = 01 + 01.1	
Cust. Ref. No.	App.		SAP Doc. No.		
Customer WMMP	Project Zhaka Jack-up Lift System		EPLAN Doc. No. 3ABDC230674 - 01		
	Zhaka Jack-up Lift System-1		ABB Ref. No.	Rev. .1	Sheet 022a
			Resp. Dept.	Cont. 026a	

ICU
CABINET FANS

ACU & ICU CABINET FAN AND
MAIN BREAKER CONTROL

ACU
CABINET FAN

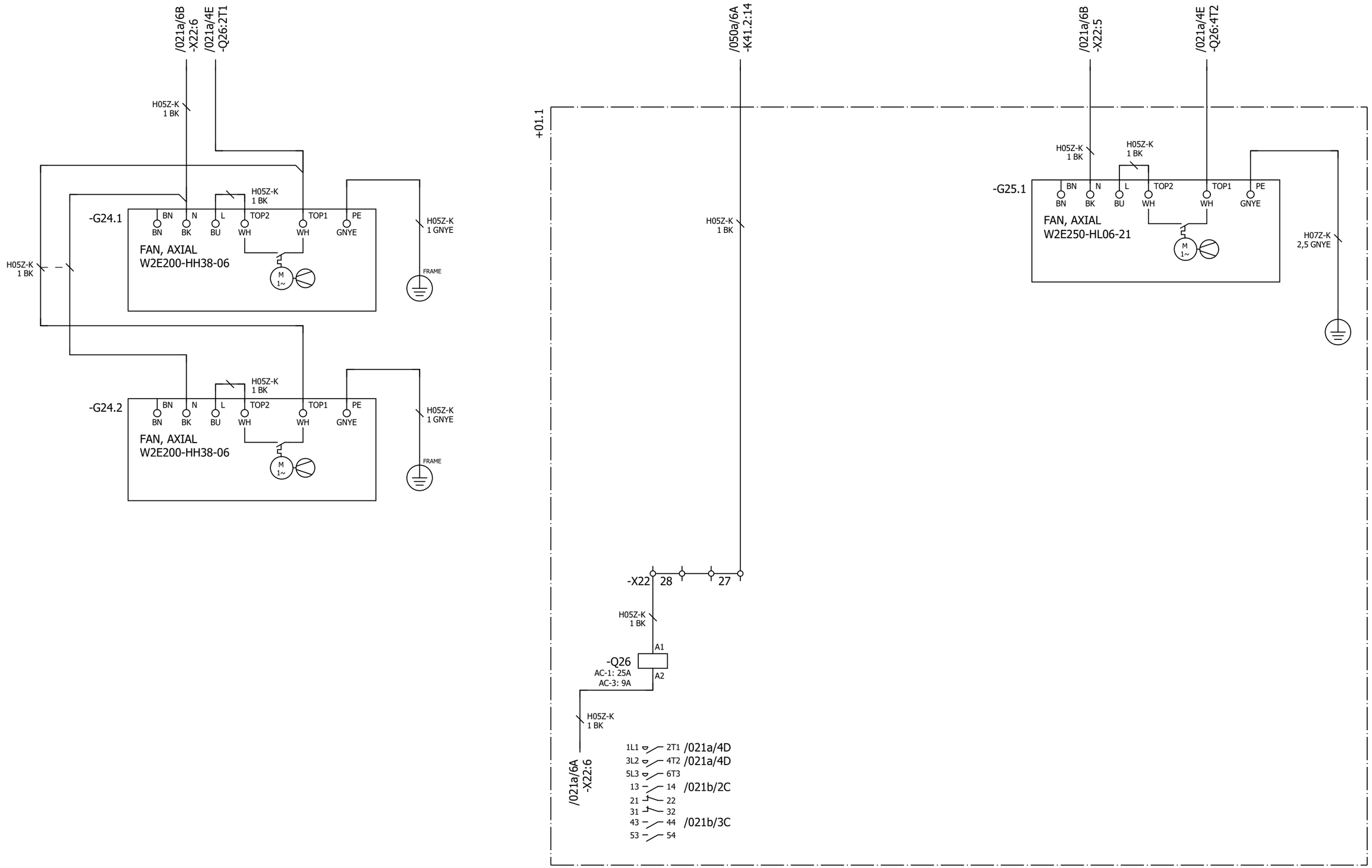

P345812 / 29711

Cust. Doc. No.	Prep. Sky-Xin Zhang 02.08.2023	Title FAN SUPPLY CONTROL DSU ACS880-307-0910A-3 400V 50 Hz IP22	Circuit diagram EFS2
Cust. Ref. No.	App.		SAP Doc. No.
Customer WMMP	Project Zhaka Jack-up Lift System Zhaka Jack-up Lift System-1		EPLAN Doc. No. 3ABDC230674 - 01
			ABB Ref. No.
			Resp. Dept.

Item Des.
= 01
+ 01.2

Rev. .1 Sheet 026a
Cont. 050a

Control and status signals	Terminal	Pin
-A51 CHARGING CONTACTOR CONTROL	-XRO1	12
-A51 FAULT (-1) 1 - NO FAULT	-XRO2	22
-A51 MAIN BREAKER CONTROL	-XRO3	32

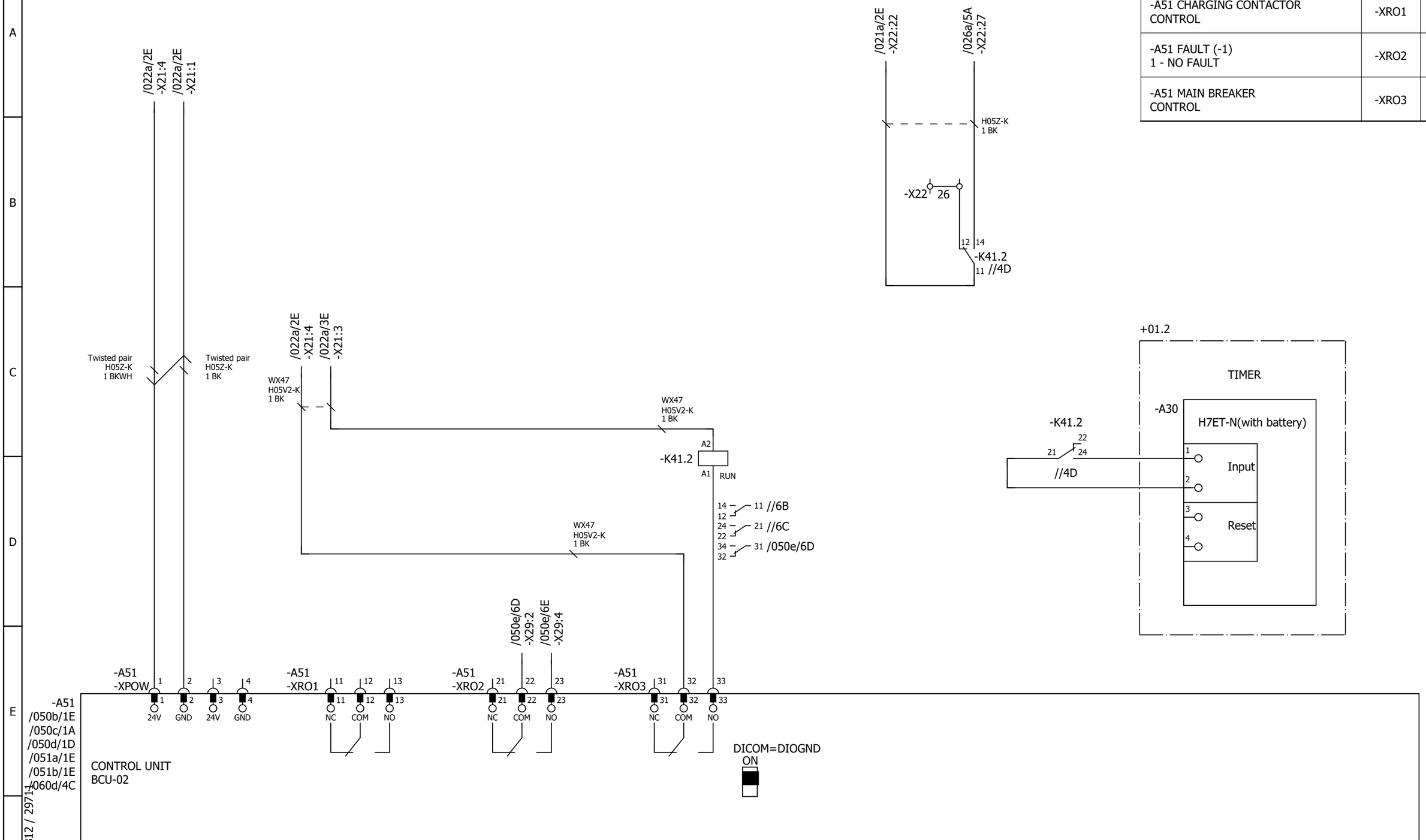

Cust. Doc. No.	Prep. Sky-Xin Zhang 02.08.2023	Title CONTROL BOARD DSU ACS880-307-0910A-3 400V 50 Hz IP22	Circuit diagram EFS2
Cust. Ref. No.	App.		SAP Doc. No.
Customer WMMP	Project Zhaka Jack-up Lift System		EPLAN Doc. No. 3ABDC230674 - 01
	Zhaka Jack-up Lift System-1		ABB Ref. No.
			Resp. Dept.

Item Des. = 01 + 01.1

Rev. .1 Sheet 050a

Cont. 050b

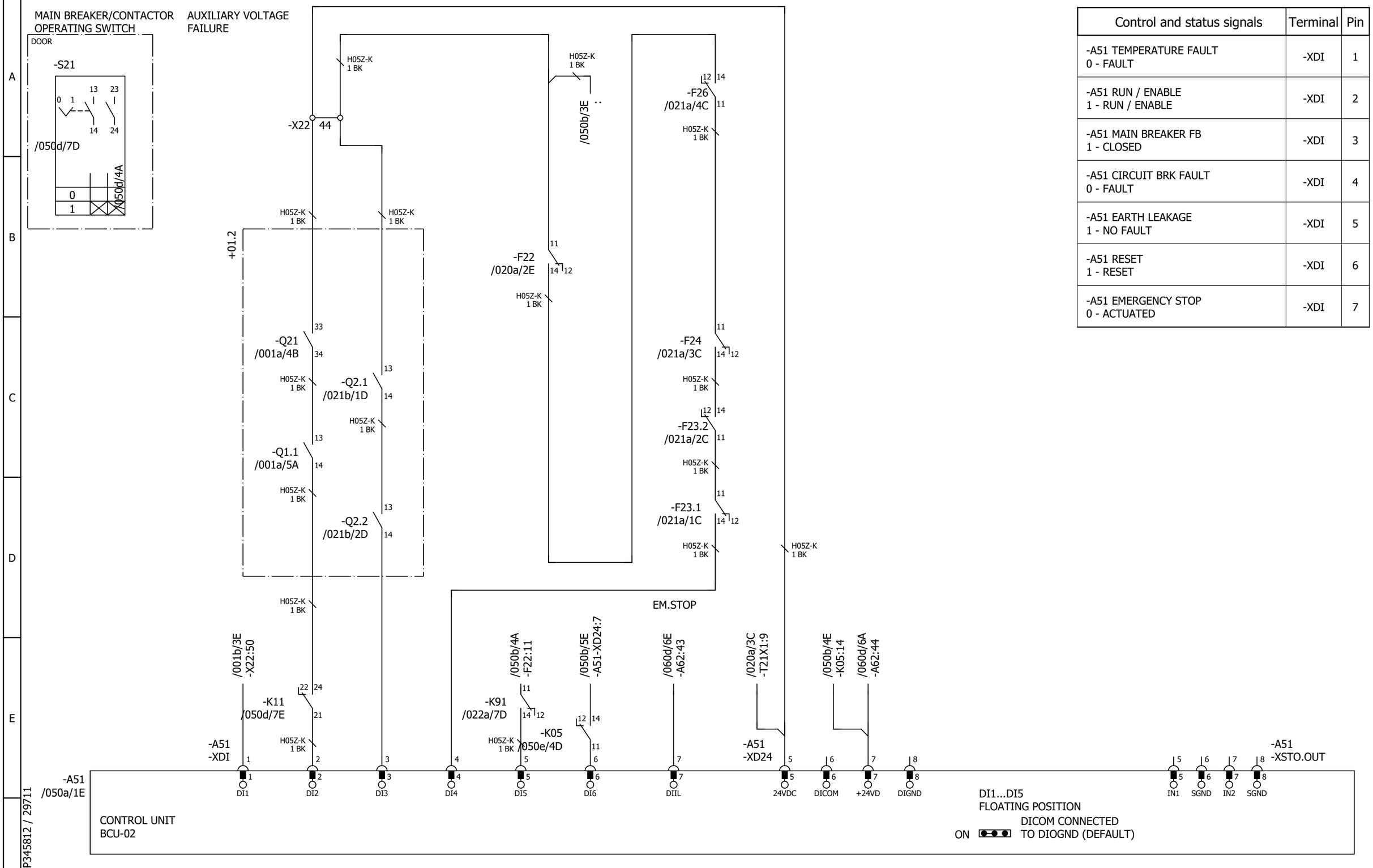

Control and status signals	Terminal	Pin
-A51 TEMPERATURE FAULT 0 - FAULT	-XDI	1
-A51 RUN / ENABLE 1 - RUN / ENABLE	-XDI	2
-A51 MAIN BREAKER FB 1 - CLOSED	-XDI	3
-A51 CIRCUIT BRK FAULT 0 - FAULT	-XDI	4
-A51 EARTH LEAKAGE 1 - NO FAULT	-XDI	5
-A51 RESET 1 - RESET	-XDI	6
-A51 EMERGENCY STOP 0 - ACTUATED	-XDI	7

Cust. Doc. No.	Prep. Sky-Xin Zhang 02.08.2023	Title CONTROL BOARD DSU ACS880-307-0910A-3 400V 50 Hz IP22	Circuit diagram EFS2
Cust. Ref. No.	App.		SAP Doc. No.
Customer WMMP	Project Zhaka Jack-up Lift System Zhaka Jack-up Lift System-1		EPLAN Doc. No. 3ABDC230674 - 01
			ABB Ref. No.
			Resp. Dept.

Item Des. = 01 + 01.1

Rev. .1 Sheet 050b

Cont. 050c

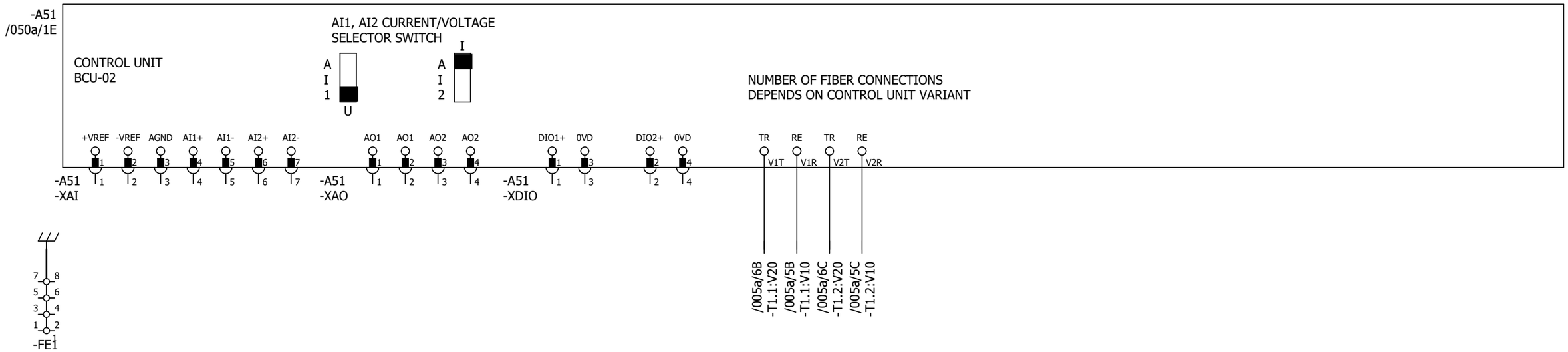

Control and status signals	Terminal	Pin
-A51 AI1 NOT SPECIFIED BY DEFAULT NOT IN USE, 0(2)...10V	-XAI	4
-A51 AI2 NOT SPECIFIED BY DEFAULT NOT IN USE, 0(4)...20mA	-XAI	6
-A51 AO1 NOT SPECIFIED BY DEFAULT NOT IN USE, 0(4)...20mA	-XAO	1
-A51 AO2 NOT SPECIFIED BY DEFAULT NOT IN USE, 0(4)...20mA	-XAO	3
-A51 DIO1 NOT SPECIFIED BY DEFAULT NOT IN USE, 0(4)...20mA	-XDIO	1
-A51 DIO2 NOT SPECIFIED BY DEFAULT NOT IN USE, 0(4)...20mA	-XDIO	2

P345812 / 29711

Cust. Doc. No.	Prep. Sky-Xin Zhang 02.08.2023	Title CONTROL BOARD DSU ACS880-307-0910A-3 400V 50 Hz IP22	Circuit diagram EFS2
Cust. Ref. No.	App.		SAP Doc. No.
Customer WMMP	Project Zhaka Jack-up Lift System Zhaka Jack-up Lift System-1		EPLAN Doc. No. 3ABDC230674 - 01
			ABB Ref. No.
			Resp. Dept.

Item Des.
= 01
+ 01.1

Rev. .1 Sheet 050c
Cont. 050d

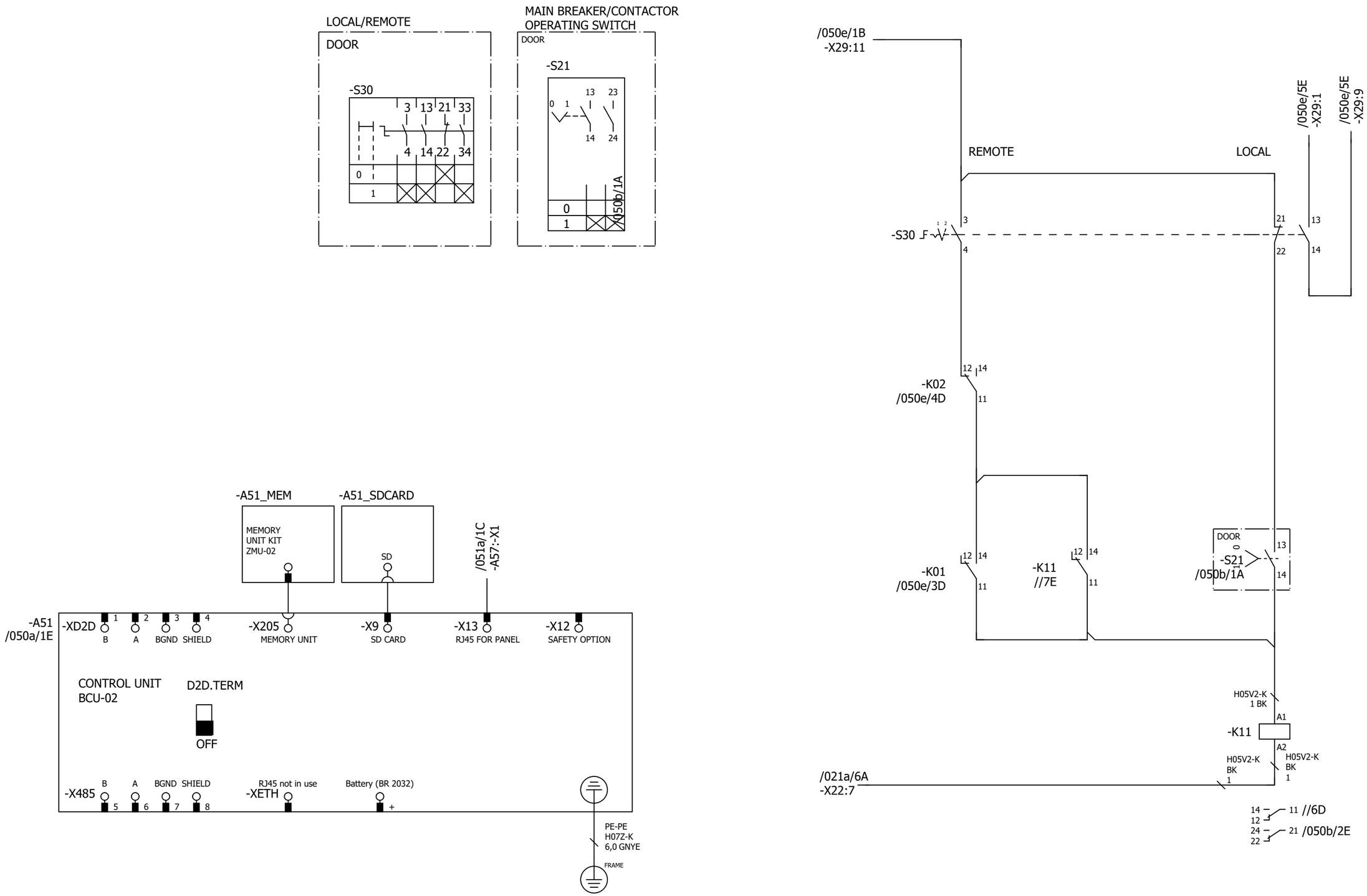

Cust. Doc. No.	Prep. Sky-Xin Zhang 02.08.2023	Title CONTROL BOARD DSU ACS880-307-0910A-3 400V 50 Hz IP22	Circuit diagram EFS2
Cust. Ref. No.	App.		SAP Doc. No.
Customer WMMP	Project Zhaka Jack-up Lift System Zhaka Jack-up Lift System-1		EPLAN Doc. No. 3ABDC230674 - 01
			ABB Ref. No.
			Resp. Dept.

Item Des.
= 01
+ 01.1

Rev. .1 Sheet 050d
Cont. 050e

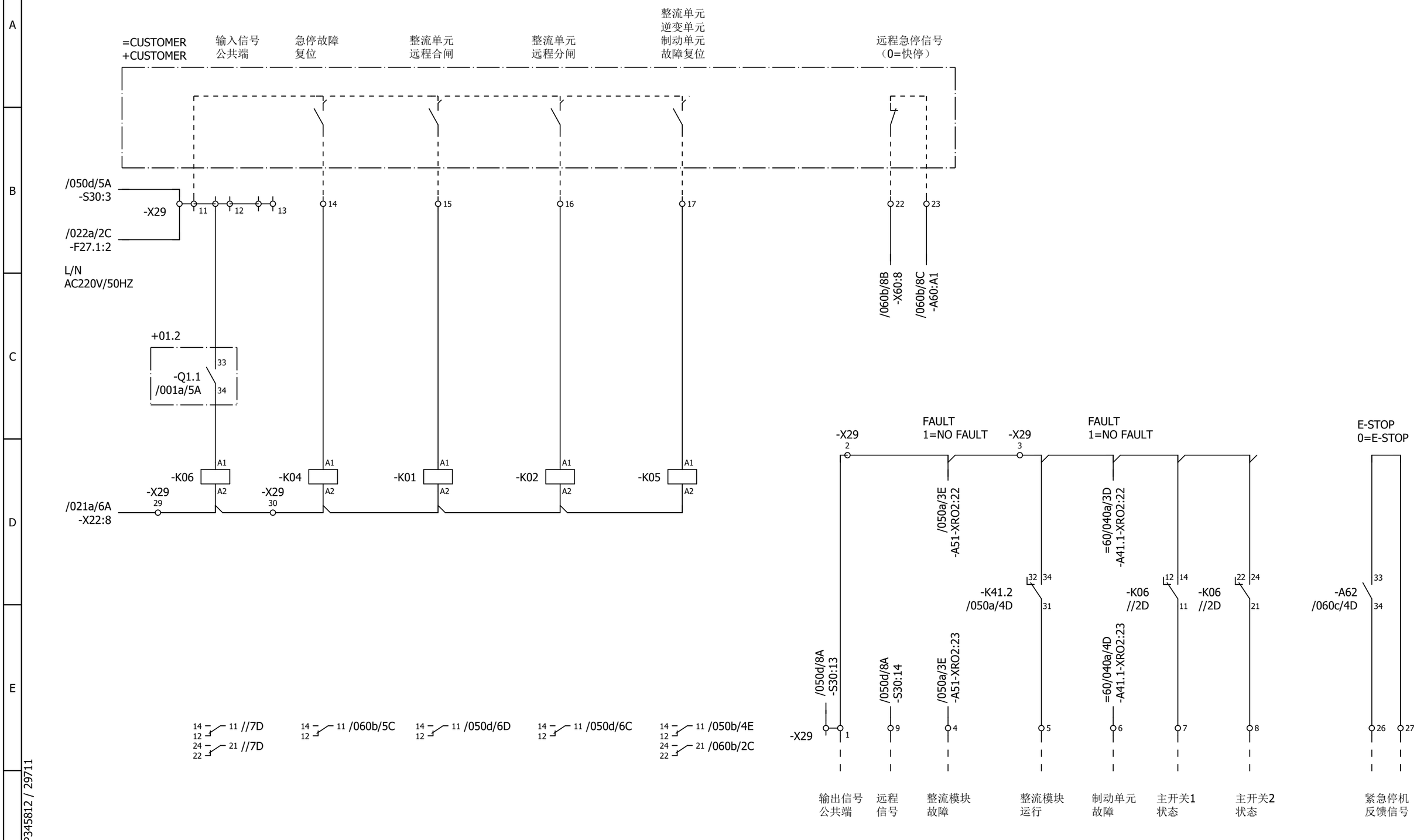

P345812 / 29711

Cust. Doc. No.	Prep. Sky-Xin Zhang 02.08.2023	Title CONTROL BOARD DSU ACS880-307-0910A-3 400V 50 Hz IP22	Circuit diagram EFS2	Item Des.	
Cust. Ref. No.	App.		SAP Doc. No.	= 01 + 01.1	
Customer WMMP	Project Zhaka Jack-up Lift System Zhaka Jack-up Lift System-1		EPLAN Doc. No. 3ABDC230674 - 01		
		ABB	ABB Ref. No.	Rev. .1	Sheet 050e
			Resp. Dept.	Cont.	051a

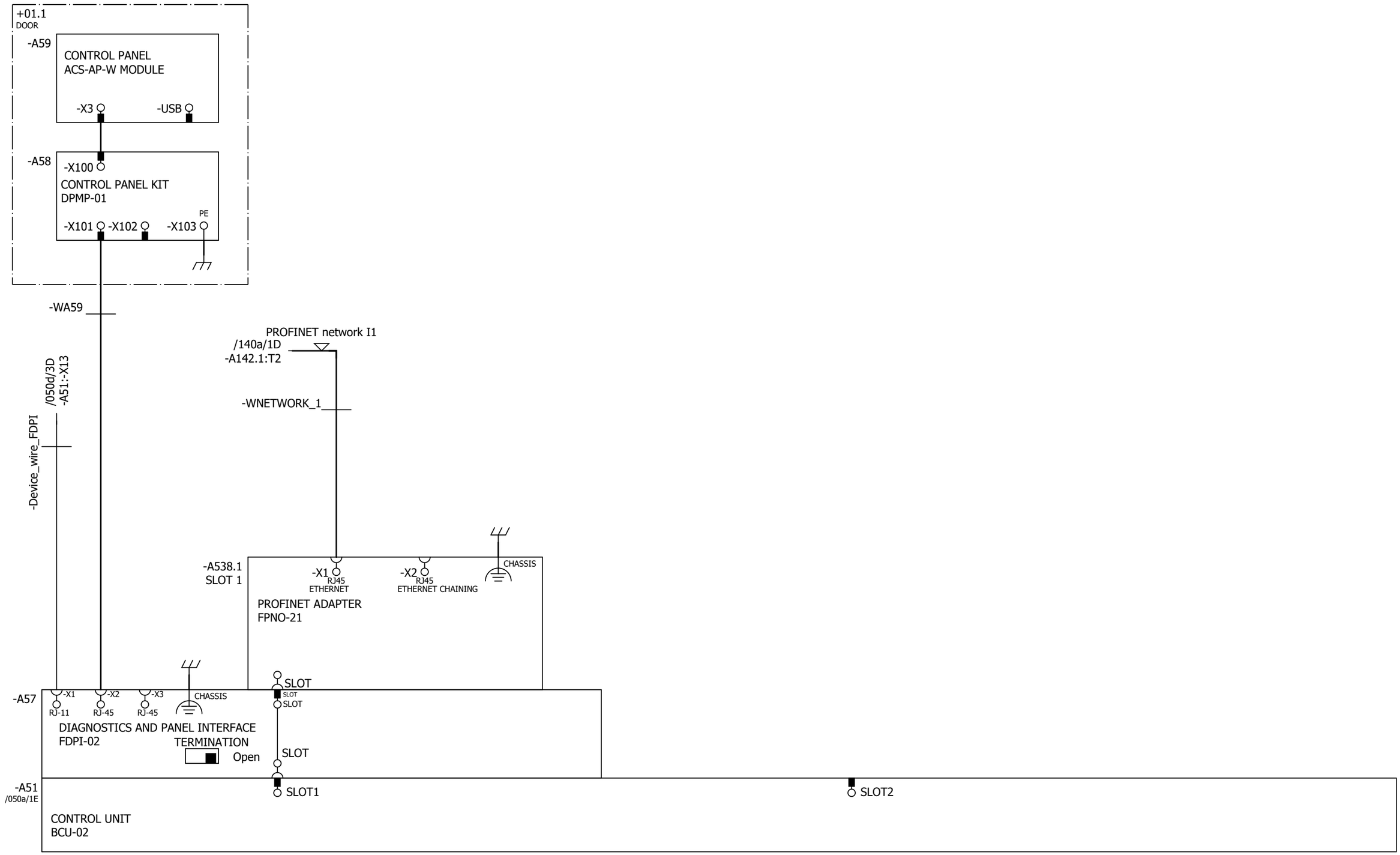

Cust. Doc. No.	Prep. Sky-Xin Zhang 02.08.2023	Title OPTION CARDS	Circuit diagram EFS2	Item Des.
Cust. Ref. No.	App.	DSU	SAP Doc. No.	= 01
Customer WMMP	Project Zhaka Jack-up Lift System	ACS880-307-0910A-3	EPLAN Doc. No. 3ABDC230674 - 01	+ 01.1
	Zhaka Jack-up Lift System-1	400V 50 Hz IP22	ABB Ref. No.	Rev. .1 Sheet 051a
			Resp. Dept.	Cont. 051b

-A51
/050a/1E

SLOT3

SLOT4

CONTROL UNIT
BCU-02

P345812 / 29711

Cust. Doc. No.	Prep. Sky-Xin Zhang 02.08.2023	Title OPTION CARDS DSU ACS880-307-0910A-3 400V 50 Hz IP22	Circuit diagram EFS2
Cust. Ref. No.	App.		SAP Doc. No.
Customer WMMP	Project Zhaka Jack-up Lift System Zhaka Jack-up Lift System-1		EPLAN Doc. No. 3ABDC230674 - 01
			ABB Ref. No.
			Resp. Dept.

Item Des.
= 01
+ 01.1

Rev. .1 Sheet 051b
Cont. 060a

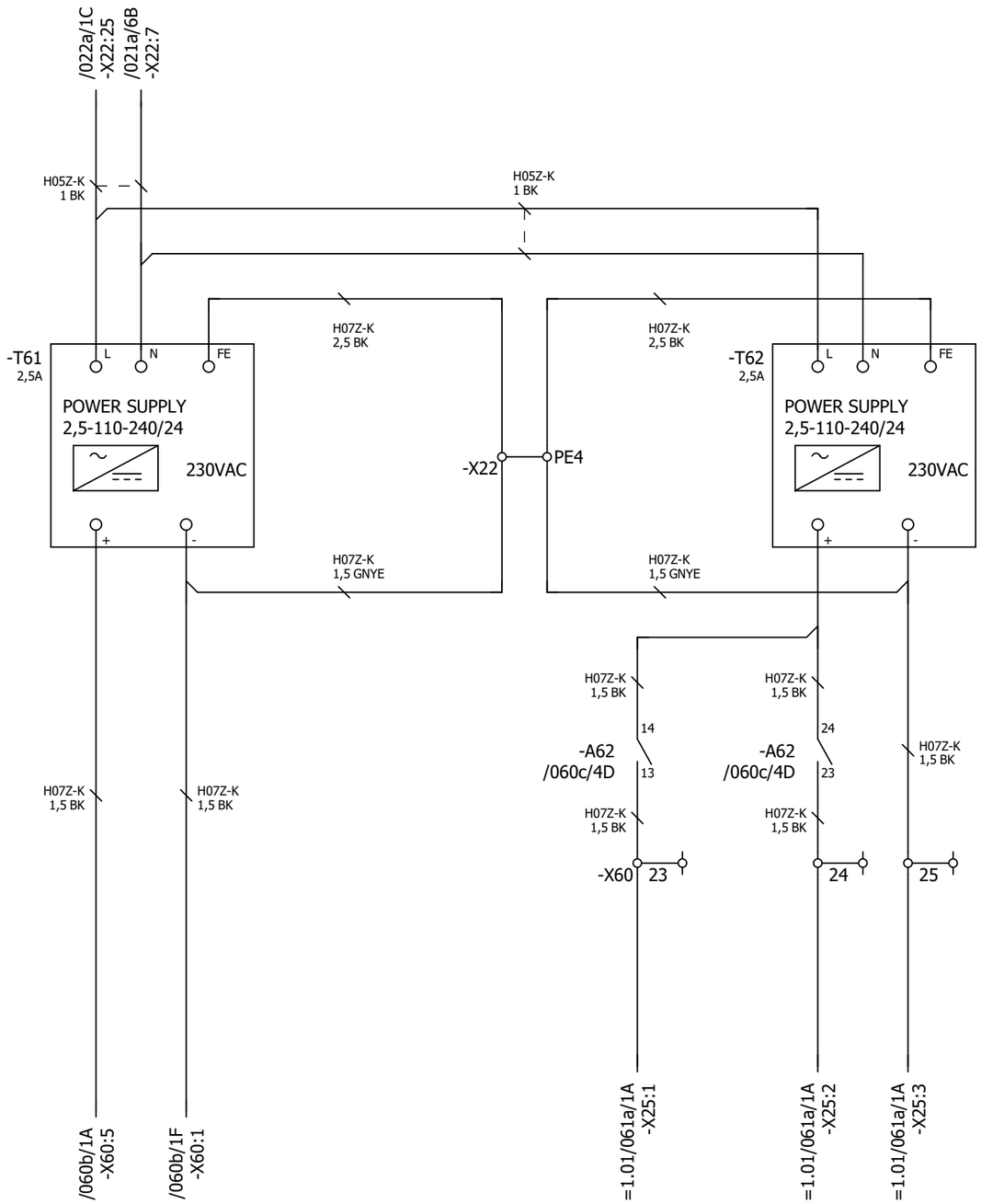

P345812 / 29711

SAFETY CIRCUIT
MACRO REVISION 1
RULES CONVERTED 9.6.2020

Cust. Doc. No.	Prep. Sky-Xin Zhang 02.08.2023	Title SAFETY CIRCUIT	Circuit diagram EFS2	Item Des.	
Cust. Ref. No.	App.	DSU	SAP Doc. No.	= 01	
Customer WMMP	Project Zhaka Jack-up Lift System	ACS880-307-0910A-3	EPLAN Doc. No. 3ABDC230674 - 01	+ 01.1	
	Zhaka Jack-up Lift System-1	400V 50 Hz IP22	ABB Ref. No.	Rev. .1	Sheet 060a
			Resp. Dept.	Cont.	060b

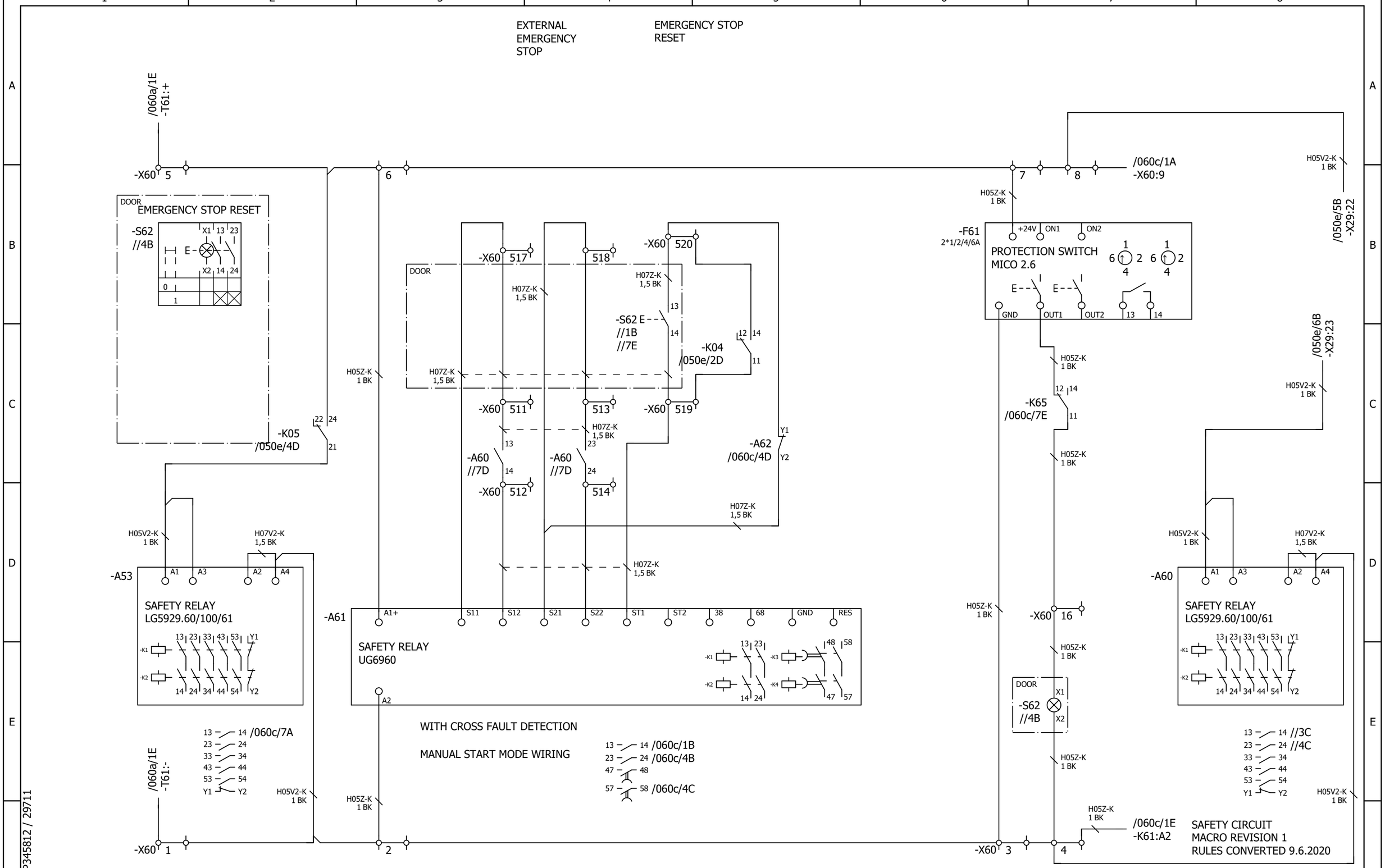

Cust. Doc. No.	Prep. Sky-Xin Zhang 02.08.2023	Title SAFETY CIRCUIT	Circuit diagram EFS2	Item Des.	
Cust. Ref. No.	App.	DSU	SAP Doc. No.	= 01	
Customer WMMP	Project Zhaka Jack-up Lift System	ACS880-307-0910A-3	EPLAN Doc. No. 3ABDC230674 - 01	+ 01.1	
	Zhaka Jack-up Lift System-1	400V 50 Hz IP22	ABB Ref. No.	Rev. .1	Sheet 060b
			Resp. Dept.	Cont.	060c

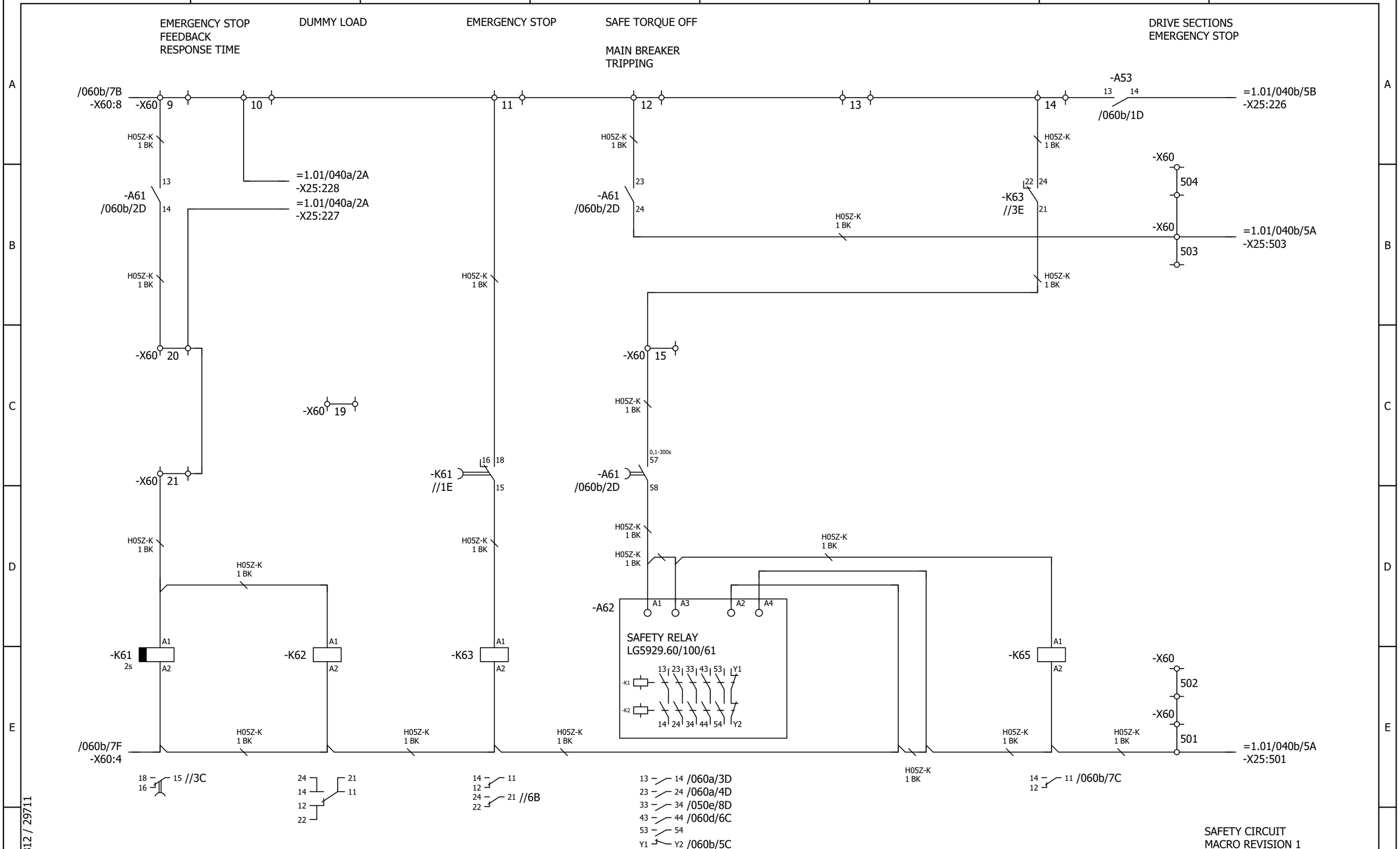

Cust. Doc. No.	Prep. Sky-Xin Zhang 02.08.2023	Title SAFETY CIRCUIT	Circuit diagram EFS2	Item Des.	
Cust. Ref. No.	App.	DSU	SAP Doc. No.	= 01	
Customer WMMP	Project Zhaka Jack-up Lift System	ACS880-307-0910A-3	EPLAN Doc. No. 3ABDC230674 - 01	+ 01.1	
	Zhaka Jack-up Lift System-1	400V 50 Hz IP22	ABB Ref. No.	Rev. .1	Sheet 060c
			Resp. Dept.	Cont.	060d

FEEDBACK TO
RESET CIRCUIT

EM STOP

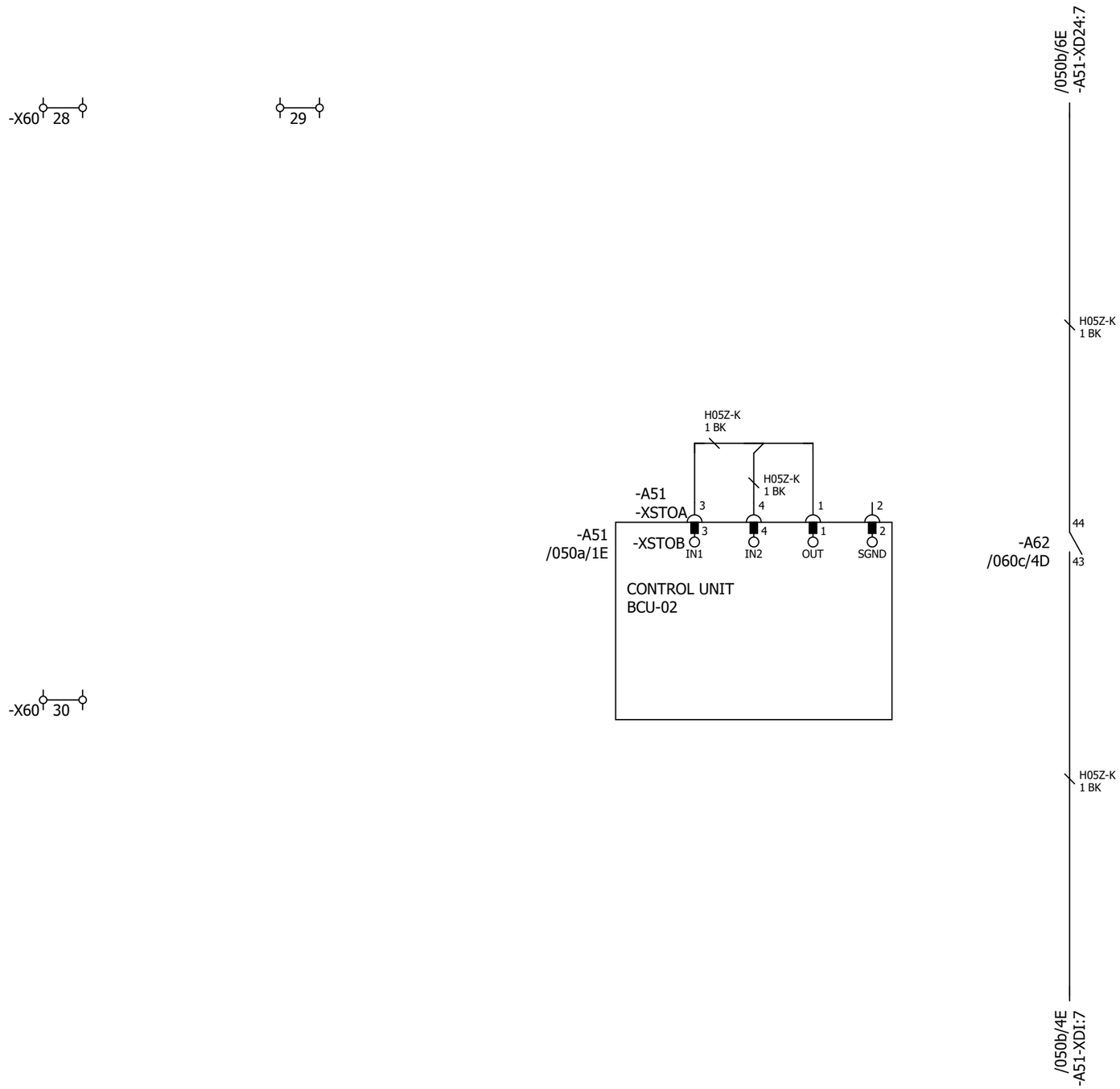

SAFETY CIRCUIT
MACRO REVISION 1
RULES CONVERTED 9.6.2020

P345812 / 29711

Cust. Doc. No.	Prep. Sky-Xin Zhang 02.08.2023	Title SAFETY CIRCUIT	Circuit diagram EFS2	Item Des.	
Cust. Ref. No.	App.	DSU	SAP Doc. No.	= 01	
Customer WMMP	Project Zhaka Jack-up Lift System	ACS880-307-0910A-3	EPLAN Doc. No. 3ABDC230674 - 01	+ 01.1	
	Zhaka Jack-up Lift System-1	400V 50 Hz IP22	ABB Ref. No.	Rev. .1	Sheet 060d
			Resp. Dept.	Cont.	095a

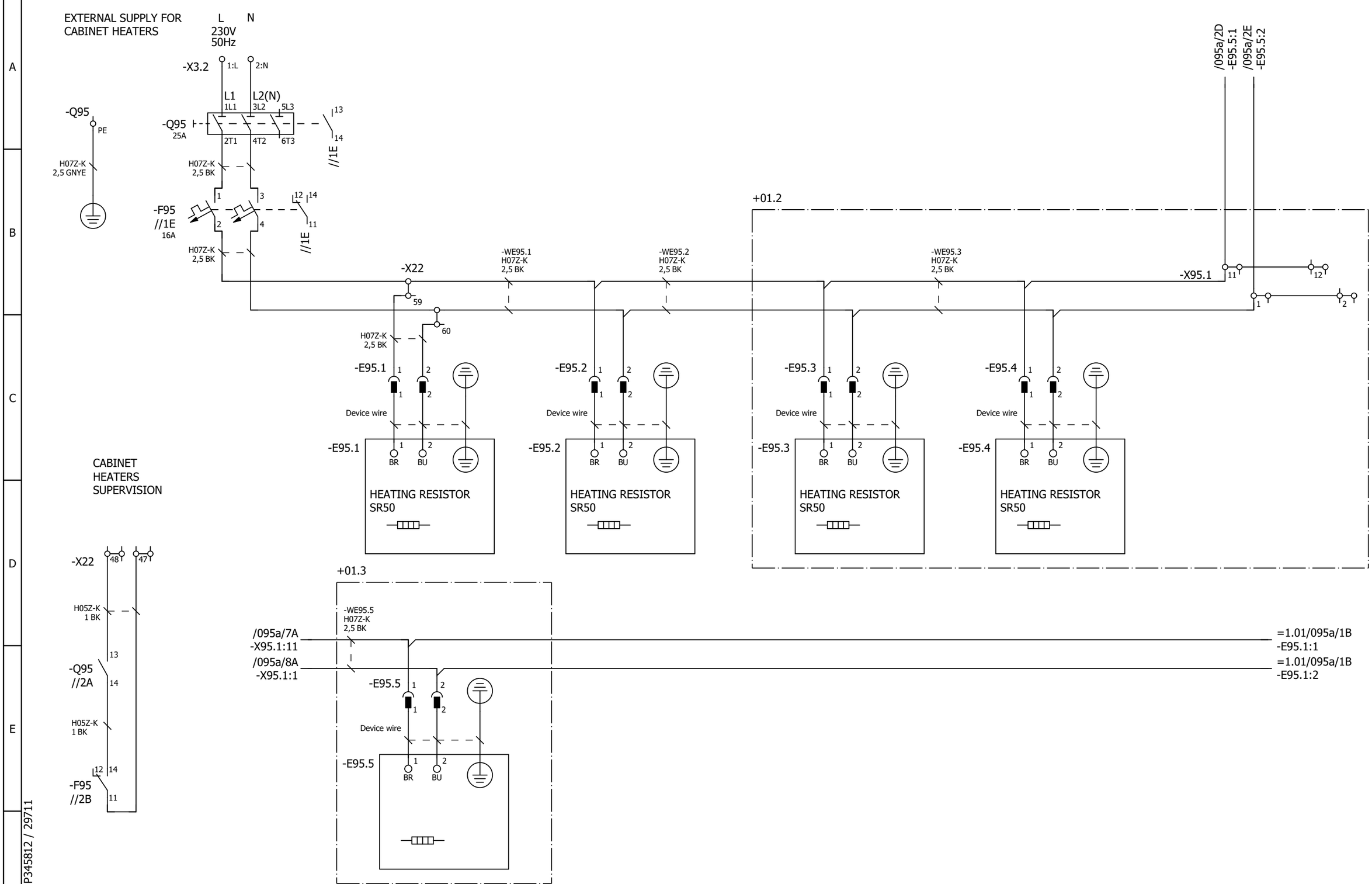

Cust. Doc. No.	Prep. Sky-Xin Zhang 02.08.2023	Title CABINET HEATER	Circuit diagram EFS2	Item Des.	
Cust. Ref. No.	App.	DSU	SAP Doc. No.	= 01	
Customer WMMP	Project Zhaka Jack-up Lift System	ACS880-307-0910A-3	EPLAN Doc. No. 3ABDC230674 - 01	+ 01.1	
	Zhaka Jack-up Lift System-1	400V 50 Hz IP22	ABB Ref. No.	Rev. .1	Sheet 095a
			Resp. Dept.	Cont.	140a

SWITCH FOR:
PROFINET network I2

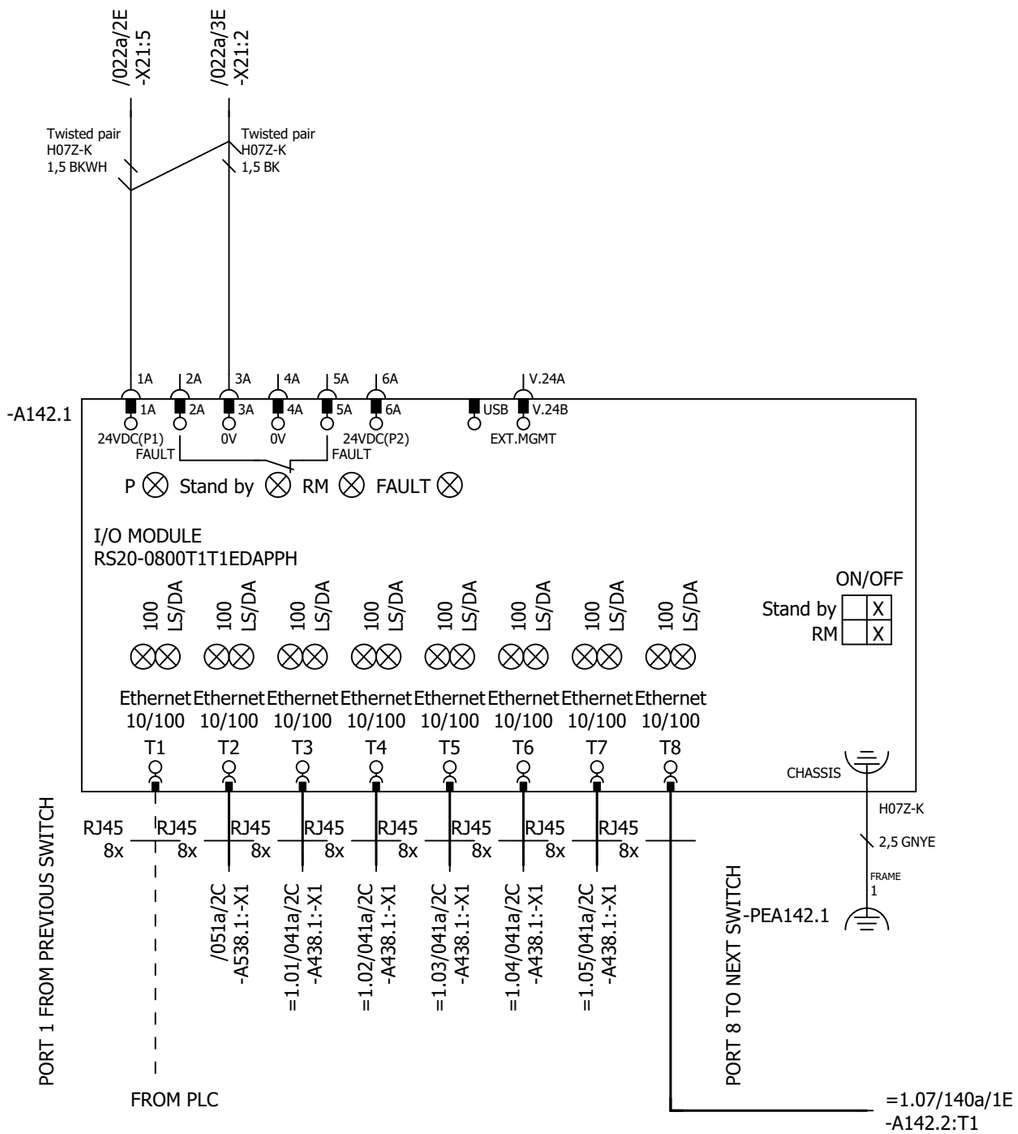

IF SWITCH IS NOT ALLOCATED TO FIRST UNIT IN NETWORK,
CHAIN AND RING TOPOLOGIES ARE NOT GENERATED OPTIMALLY
FROM WIRING PERSPECTIVE. PLEASE CHECK CONNECTIONS.

GENERATED WIRING ORDER, IF SWITCH IS ALLOCATED TO LAST UNIT IN NETWORK:
1) UNIT WITH SWITCH
2) FIRST UNIT IN NETWORK
3) SECOND UNIT IN NETWORK
....
n) UNIT BEFORE SWITCH

NOTE!
INSTALL GREEN PROFINET CABLES IN PROFINET/PROFIsafe NETWORK

P345812 / 29711

Cust. Doc. No.	Prep. Sky-Xin Zhang 02.08.2023	Title OPTION CARDS	Circuit diagram EFS2	Item Des.	
Cust. Ref. No.	App.	DSU	SAP Doc. No.	= 01	
Customer WMMP	Project Zhaka Jack-up Lift System	ACS880-307-0910A-3	EPLAN Doc. No. 3ABDC230674 - 01	+ 01.1	
	Zhaka Jack-up Lift System-1	400V 50 Hz IP22	ABB Ref. No.	Rev. .1	Sheet 140a
			Resp. Dept.	Cont.	&MPC/Part list_1

Part list: 3ABDC230674SU01001

Item	Sort String	Qty.Str	Unit	Component Number	Description and text	Technical data
0010		1.000	ST		ACS880-307-0910A-3+A004+A012+A018+B053+	
0020		1.000	ST		_C121+C132+C206+E210+F250+F253+G300+G307	
0030		1.000	ST		_+G315+G316+G320+G330+G334+G335+G344+H35	
0040		1.000	ST		_0+H367+J400+K492+L509+P913+Q954+Q964	
0050		1.000	ST		=01	
0060		1.000	ST		+01.1,ACU4	
0070		1.000	ST		SAFETYCIRCUIT	
0080	-A61	1.000	PC	3AXD50000011999	SAFETY RELAY UG 6960.04PS/100/61	24 V;DC;0,15 A;0,1-300s;2NO+2NO DELAYED
0090	-A62	1.000	PC	3AUA0000046678	SAFETY RELAY LG 5929.60/100/61	5NO+1NC AC/DC 24V 50/60HZ
0100	-F27	1.000	PC	3AFE68264766	PROTECTION SWITCH S 201-K6	S 201-K6
0110	(-F27)	1.000	PC	3AFE68265258	AUXILIARY CONTACT S2C-H6R	10A (ITH), AC14, 400V/1A, 230V/2A S2C
0120	-F61	1.000	PC	3AXD50000000391	PROTECTION SWITCH MICO2.6	18...30V, 1A, 2A, 4A, 6A
0130	-K61	1.000	PC	3AFE68782813	TIME RELAY CT-ARS.11 0.5S-10MIN	24-220VAC/DC 1CO 1SRV630120R3100
0140	-K62	1.000	PC	3AUA0000024426	RELAY RCL314024-24DC-DIODE	16 A;250 VAC;24VDC,1C/O,UL
0150	-K63	1.000	PC	3AUA0000102191	RELAY RCL425024-SOCKET-DIODE	8 A;24 V;24VDC, 2C/O
0160	-S62	1.000	PC	3AUA0000054384	PUSH BUTTON MP1-11L	BLUE PUSH BUTTON, D=22MM
0170	(-S62)	1.000	PC	3AUA0000054387	AUXILIARY CONTACT MCB-10	1 NO
0180	(-S62)	1.000	PC	3AUA0000054387	AUXILIARY CONTACT MCB-10	1 NO
0190	(-S62)	1.000	PC	3AUA0000054389	PLASTIC HOUSING MCBH-00	HOLDER
0200	(-S62)	1.000	PC	3AUA0000131773	ADHESIVE LABEL KA1-8120	FOR 3 POSITION SWITCH
0210	(-S62)	1.000	PC	3AXD50000000360	LAMP INDICATOR MLBL-01W	24 V, AC/DC, WHITE
0220	(-S62)	1.000	PC	3AXD50000000991	RATING PLATE (E-ST-RESET)MA6-1090-L	MA6-1090-L
0230	-T61	1.000	PC	3ABD00068117	POWER SUPPLY MDR-60-24	85 - 264 V;AC;OUTPUT 24 VDC +-1%, 2,5A
0240	-T62	1.000	PC	3ABD00068117	POWER SUPPLY MDR-60-24	85 - 264 V;AC;OUTPUT 24 VDC +-1%, 2,5A
0250	-X60	1.000	PC	3AXD50000002241	TERMINAL BLOCK AS X60 E-STOP STANDARD	12 AWG;2 mm2;20 A;600 V
0260		1.000	ST		AUXILIARYVOLTAGEDISTRIBUTION	
0270	-F20	1.000	PC	3AFE68264979	PROTECTION SWITCH S 202-K16	
0280	(-F20)	1.000	PC	3AFE68265258	AUXILIARY CONTACT S2C-H6R	10A (ITH), AC14, 400V/1A, 230V/2A S2C
0290	-F22	1.000	PC	3AFE68264791	PROTECTION SWITCH S 201-K10	ACS800 MD
0300	(-F22)	1.000	PC	3AFE68265258	AUXILIARY CONTACT S2C-H6R	10A (ITH), AC14, 400V/1A, 230V/2A S2C
0310	-F23.1-2	2.000	PC	3AFE68264766	PROTECTION SWITCH S 201-K6	S 201-K6
0320	(-F23.1-2)	2.000	PC	3AFE68265258	AUXILIARY CONTACT S2C-H6R	10A (ITH), AC14, 400V/1A, 230V/2A S2C
0330	-F24	1.000	PC	3AFE68264766	PROTECTION SWITCH S 201-K6	S 201-K6

P345812 / 29711

Cust. Doc. No.	Prep.	Title PART LIST DSU ACS880-307-0910A-3 400V 50 Hz IP22	Item Des. = 01 +
Cust. Ref. No.	App.		SAP Doc. No.
Customer WMMP	Project Zhaka Jack-up Lift System Zhaka Jack-up Lift System-1		EPLAN Doc. No. 3ABDC230674 - 01
			ABB Ref. No. / Rev. / Sheet Part list_1
			Resp. Dept. / Cont. Part list_2

Part list: 3ABDC230674SU01001

Item	Sort String	Qty.Str	Unit	Component Number	Description and text	Technical data
0340	(-F24)	1.000	PC	3AFE68265258	AUXILIARY CONTACT S2C-H6R	10A (ITH), AC14, 400V/1A, 230V/2A S2C
0350	-F29	1.000	PC	3AFE68264766	PROTECTION SWITCH S 201-K6	S 201-K6
0360	(-F29)	1.000	PC	3AFE68265258	AUXILIARY CONTACT S2C-H6R	10A (ITH), AC14, 400V/1A, 230V/2A S2C
0370	-Q20	1.000	PC	3AUA0000047420	DISCONNECTOR OT 40F3	40A 690V
0380	(-Q20)	1.000	PC	3AUA0000047421	ENCLOSURE TERMINAL SHROUD OTS40T	
0390	(-Q20)	1.000	PC	3AUA0000047423	AUXILIARY CONTACT OTPE 40FP	OT16...OT40F3
0400	(-Q20)	1.000	PC	3AUA0000047451	HANDLE OHBS 12/1	6X6
0410	(-Q20)	1.000	PC	3AFE59022911	AUXILIARY CONTACT OA 2G11	1NO+1NC,230V 6A AC15
0420	-T21	1.000	PC	3ABD00055509	TRANSFORMER M1V5/2-25D	380/400/415/440/460/480/500V;2,50 KVA
0430	-T22	1.000	PC	3ABD00010542	POWER SUPPLY NDR-120-24	24V 5A
0440	-X21	1.000	PC	3AXD50000004432	TERMINAL BLOCK AS X21	12 AWG;2,50 mm2;20 A;600 V
0450		1.000	ST		MAINCONTACTOR/BREAKERCONTROL	
0460	-S21	1.000	PC	3AUA0000095648	SELECTOR SWITCHES C2SS2-10B-20	1A@240VAC, 0,3A@24VDC
0470	(-S21)	1.000	PC	3AUA0000117867	PLASTIC HOUSING BLOCK SHEET FOR PANNEL	
0480	(-S21)	1.000	PC	3AUA0000117869	ASSEMBLY PLATE MOUNTING FOR BUTTON PL	MOUNTING FOR BUTTON PLATE
0490	(-S21)	1.000	PC	3AUA0000131773	ADHESIVE LABEL KA1-8120	FOR 3 POSITION SWITCH
0500	(-S21)	1.000	PC	3AUA0000139963	RATING PLATE INSERTS (0 - I)	MA6-1087
0510		1.000	ST		CONTROLBOARD	
0520	-A51	1.000	PC	3AUA0000110429	CONTROL UNIT BCU-02, MAIN ASSEMBLY	fiber optic links for 2 modules
0530	-A51_MEM	1.000	PC	3AXD50000006010	MEMORY UNIT KIT ZMU-02	
0540	-A58	1.000	PC	3AUA0000108878	CONTROL PANEL KIT DPMP-01	DPMP-01
0550	-A59	1.000	PC	3AXD50000025964	CONTROL PANEL ACS-AP-W MODULE	ASSISTANT PANEL WIRELESS CPU1
0560	SCREW	1.000	PC	3AFE68681481	SCREW K30X10 TORX	PT WN1452 ZN
0570	SOFTWARE	1.000	PC	3AUA0000124971	SOFTWARE ADIF2 FOR BCU-X2	ADIF2 FOR BCU-X2
0580		1.000	ST		PANELBUS	
0590	-A57	1.000	PC	3AUA0000108650	FIELDBUS KIT FDPI-02	PANEL BUS ADAPTER
0600		1.000	ST		EARTHFAULTMONITORING	
0610	-A90	1.000	PC	3ABD50000947577	INSUL MON DEVICE LK 5895.12/010/61 DC 2	MEAS. 0..1100VAC/0..1500VDC
0620	-K91	1.000	PC	3AUA0000102191	RELAY RCL425024-SOCKET-DIODE	8 A;24 V;24VDC, 2C/O
0630	-S90	1.000	PC	3AUA0000131070	PUSH BUTTON MP1-11Y	LIGHTED PUSHBUTTON, MOMENTARY , YELLOW
0640	(-S90)	1.000	PC	3AUA0000054387	AUXILIARY CONTACT MCB-10	1 NO
0650	(-S90)	1.000	PC	3AUA0000054388	AUXILIARY CONTACT MCB-01	1 NC
0660	(-S90)	1.000	PC	3AUA0000054389	PLASTIC HOUSING MCBH-00	HOLDER

P345812 / 29711

Cust. Doc. No.	Prep.	Title PART LIST DSU ACS880-307-0910A-3 400V 50 Hz IP22	Item Des. = 01 +
Cust. Ref. No.	App.	SAP Doc. No.	
Customer WMMP	Project Zhaka Jack-up Lift System Zhaka Jack-up Lift System-1	EPLAN Doc. No. 3ABDC230674 - 01	
		ABB Ref. No.	Rev. / Sheet Part list_2
		Resp. Dept.	Cont. Part list_3

Part list: 3ABDC230674SU01001

Item	Sort String	Qty.Str	Unit	Component Number	Description and text	Technical data
0670	(-S90)	1.000	PC	3AXD50000000360	LAMP INDICATOR MLBL-01W	24 V, AC/DC, WHITE
0680	-X90	1.000	PC	3AFE68486688	TERMINAL BLOCK AS ACS800MD	UNEARTHED NET MONITOR
0690		1.000	ST		ANTI-CONDENSATIONHEATING	
0700	-E95.1-2	2.000	PC	3AFE09827498	HEATING EQUIPMENT SR50	HEATER 50W/220V(110-270VACDC)
0710	(-E95.1-2)	2.000	PC	3AUA0000066694	CONNECTOR SSL2.5 3043815	LOCKING ELEMENTS FOR ST-COMBI CONNECTOR
0720	(-E95.1-2)	2.000	PC	3AXD50000007033	CONNECTOR SC 2,5/ 2	2,50 mm2;24 A;500 V;2-POS. MALE
0730	-F95	1.000	PC	3AFE68264979	PROTECTION SWITCH S 202-K16	
0740	(-F95)	1.000	PC	3AFE68265258	AUXILIARY CONTACT S2C-H6R	10A (ITH), AC14, 400V/1A, 230V/2A S2C
0750	-Q95	1.000	PC	3AUA0000047431	DISCONNECTOR OT 25F3	
0760	(-Q95)	1.000	PC	3AUA0000047421	ENCLOSURE TERMINAL SHROUD OTS40T	
0770	(-Q95)	1.000	PC	3AUA0000047423	AUXILIARY CONTACT OTPE 40FP	OT16...OT40F3
0780	(-Q95)	1.000	PC	3AUA0000047451	HANDLE OHBS 12/1	6X6
0790	(-Q95)	1.000	PC	3AFE64078488	AUXILIARY CONTACT OA1G10	1NO;6 A;230 V;AC15;4 A;400 V
0800	-WE95.1-2	2.000	PC	3AXD50000010441	WIRE HARNESS SET_HP_E95_FRAME_V2	__ - E95
0810	Assemblypa	2.000	PC	3AXD50000010133	ASSEMBLY PLATE HEATER	STEEL HDG 1,0;DEGREAS CLEAN
0820	Heaterunit	1.000	PC	3AXD50000010509	ASSEMBLY DRAWING HEATER 50 AND 100W	
0830		1.000	ST		COMMONTERMINALBLOCK	
0840	-X22	1.000	PC	3AXD50000004433	TERMINAL BLOCK AS X22	12 AWG;2,50 mm2;20 A;600 V
0850		1.000	ST		FANCONTROL	
0860	-Q26	1.000	PC	3AXD50000000403	CONTACTOR AF09-30-10-13 UL,IEC,	7A;690V;25A AC-1, COIL 100-250V CSA,IEC,
0870	(-Q26)	1.000	PC	3AUA0000091225	AUXILIARY CONTACT CA4-22M	16A, 50/60Hz, 690V, 2NO/2NC
0880		1.000	ST		DSUMODULEVENTILATION	
0890	-F26	1.000	PC	3AFE68264758	PROTECTION SWITCH S 201-K4	4A, 440VAC/60VDC
0900	(-F26)	1.000	PC	3AFE68265258	AUXILIARY CONTACT S2C-H6R	10A (ITH), AC14, 400V/1A, 230V/2A S2C
0910		1.000	ST		DDCSCOMMUNICATION	
0920		1.000	ST		ACCESSORIES	
0930	ACCESSORY	1.000	PC	3ABD00006287	HANDLE XK06-101-2522	1000V,FOR DIN 00,1,2,3
0940	ACCESSORY	1.000	PC	3AFE36628740	DOCUMENT POCKET DOCUMENT POCKET	For ACS880
0950		1.000	ST		ACUFAN	
0960	-G25.1	1.000	PC	3AUA0000125508	FAN W2E250-HL06-21	0,51 A;50 Hz;60 Hz;230 V;115/165W 3µF
0970		1.000	ST		FIELDBUS	
0980	-A538.1	1.000	PC	3AXD50000192779	OPTION MODULE FPNO-21	PROFINET IO
0990		1.000	ST		+01.2,ICU2	

P345812 / 29711

Cust. Doc. No.	Prep.	Title PART LIST DSU ACS880-307-0910A-3 400V 50 Hz IP22	Item Des. = 01 +
Cust. Ref. No.	App.	SAP Doc. No.	
Customer WMMP	Project Zhaka Jack-up Lift System Zhaka Jack-up Lift System-1	EPLAN Doc. No. 3ABDC230674 - 01	
		ABB Ref. No.	Rev. / Sheet Part list_3
		Resp. Dept.	Cont. Part list_4

Part list: 3ABDC230674SU01001

Item	Sort String	Qty.Str	Unit	Component Number	Description and text	Technical data
1000		1.000	ST		AUXILIARYVOLTAGEDISTRIBUTION	
1010	-Q21	1.000	PC	3AXD50000003362	FUSE SWITCH OS160GD12	160,00 A;1000,00 V;3 POLE, IP=17,5KA, HA
1020	(-Q21)	1.000	PC	3AUA0000051607	HANDLE FOR SWITCH OHB65J6	BLACK
1030	(-Q21)	3.000	PC	3AUA0000086961	SWITCH ACCESSORIE OSS 160GT 1S/3 COVER	Transparent short shroud
1040	(-Q21)	1.000	PC	3AXD50000000984	HANDLE OXP6X161 SHAFT	SHAFT
1050	(-Q21)	1.000	PC	3AFE64078488	AUXILIARY CONTACT OA1G10	1NO;6 A;230 V;AC15;4 A;400 V
1060	(-Q21)	1.000	PC	3AFE64078488	AUXILIARY CONTACT OA1G10	1NO;6 A;230 V;AC15;4 A;400 V
1070	(-Q21)	1.000	PC	3AFE64278797	AUXILIARY CONTACT OA3G 01	1NC
1080	(-Q21)	1.000	PC	3AFE68674841	SWITCH ACCESSORIE OHZX 10	
1090	-Q21-F21.1	2.000	PC	3ABD00017817	FUSE 16NHG000B-690	16A 690V
1100		1.000	ST		CURRENTMEASUREMENT	
1110	-B2.1	1.000	PC	3AFE68233232	CURR. TRANSFORMER HF5 600/1A 741E0030	600/1A
1120	-B2.2	1.000	PC	3AFE68233232	CURR. TRANSFORMER HF5 600/1A 741E0030	600/1A
1130	-P2.1-2	2.000	PC	3ABD00028058	A-METER KLY-T72 600A/1A.2-F-SC IP54	KLY-T72 600A/1A.2-F-SC IP54
1140		1.000	ST		VOLTAGEMEASUREMENT	
1150	-F5.1	1.000	PC	3AUA0000089111	PROTECTION SWITCH MS132-1.6	1.0…1.6A,400V/100kA without fuse
1160	-F5.1	1.000	PC	3AFE64693026	AUXILIARY CONTACT HKF1-11	230VAC 4A,1NC+1NO
1170	-F5.2	1.000	PC	3AUA0000089111	PROTECTION SWITCH MS132-1.6	1.0…1.6A,400V/100kA without fuse
1180	-F5.2	1.000	PC	3AFE64693026	AUXILIARY CONTACT HKF1-11	230VAC 4A,1NC+1NO
1190	-P5.1	1.000	PC	3ABD00025222	V-METER KLY-T72 600V IP54	0-600VAC IP54
1200	-P5.2	1.000	PC	3ABD00025222	V-METER KLY-T72 600V IP54	0-600VAC IP54
1210	-S5.1	1.000	PC	3AFE10032342	K1 D-024MC+ KBC 1T	12A(IE) 690V(UE)
1220	-S5.2	1.000	PC	3AFE10032342	K1 D-024MC+ KBC 1T	12A(IE) 690V(UE)
1230		1.000	ST		MAINSWITCH	
1240	(-Q1.1)_1	1.000	PC	3AFE64078488	AUXILIARY CONTACT OA1G10	1NO;6 A;230 V;AC15;4 A;400 V
1250	(-Q1.1)_2	1.000	PC	3AFE64278797	AUXILIARY CONTACT OA3G 01	1NC
1260	(-Q1.1)_4	1.000	PC	3AFE64278797	AUXILIARY CONTACT OA3G 01	1NC
1270	-Q1.1	1.000	PC	3AXD50000006326	DISCONNECTOR OT1250E12DD	1250 A;1000 V;6P,ISC=50/110KA,HANDLE 1L2
1280	-Q1.1	1.000	PC	3ABD00054645	LOCKING ELEMENTS OHZX19	OT accessory oack
1290	(-Q1.1)	1.000	PC	3AUA0000102085	SWITCH ACCESSORIE OXP12X250 SHAFT	12X250MM
1300	(-Q1.1)	1.000	PC	3AXD50000240449	HANDLE OHB200J12PTE08	T-OFF-ON-ON,OT1000-2500_DD
1310		1.000	ST		MAINFUSE	
1320	-F1.1-6	6.000	PC	3AFE68731640	HRC FUSE LINK 170M6412	800A 690V

P345812 / 29711

Cust. Doc. No.	Prep.	Title PART LIST DSU ACS880-307-0910A-3 400V 50 Hz IP22	Item Des. = 01 +
Cust. Ref. No.	App.	SAP Doc. No.	
Customer WMMP	Project Zhaka Jack-up Lift System Zhaka Jack-up Lift System-1	EPLAN Doc. No. 3ABDC230674 - 01	
		ABB Ref. No.	Rev. / Sheet Part list_4
		Resp. Dept.	Cont. Part list_5

Part list: 3ABDC230674SU01001

Item	Sort String	Qty.Str	Unit	Component Number	Description and text	Technical data
1330		1.000	ST		MAINCONTACTOR	
1340	-Q2.1-2	2.000	PC	3AFE68687284	CONTACTOR AF1250-30-22-70	
1350		1.000	ST		CABINETVENTILATION	
1360	-G24.1-2	2.000	PC	3AFE10012171	FAN W2E200-HH38-06	67 W;230 V;50/60Hz
1370	(-G24.1-2)	2.000	PC	3AFE10028850	BRACKET 78128-2-4039 FINGER SH	FOR W2E 200
1380		1.000	ST		EARTHFAULTMONITORING	
1390	-F90	1.000	PC	3AUA0000089111	PROTECTION SWITCH MS132-1.6	1.0…1.6A,400V/100kA without fuse
1400	-F90	1.000	PC	3AFE64693026	AUXILIARY CONTACT HKF1-11	230VAC 4A,1NC+1NO
1410		1.000	ST		ANTI-CONDENSATIONHEATING	
1420	-E95.3-4	2.000	PC	3AFE09827498	HEATING EQUIPMENT SR50	HEATER 50W/220V(110-270VACDC)
1430	(-E95.3-4)	2.000	PC	3AUA0000066694	CONNECTOR SSL2.5 3043815	LOCKING ELEMENTS FOR ST-COMBI CONNECTOR
1440	(-E95.3-4)	2.000	PC	3AXD50000007033	CONNECTOR SC 2,5/ 2	2,50 mm2;24 A;500 V;2-POS. MALE
1450	-WE95.3-4	2.000	PC	3AXD50000010441	WIRE HARNESS SET_HP_E95_FRAME_V2	__ - E95
1460	-X95.1	1.000	PC	3AXD50000019251	TERMINAL BLOCK AS 600 V;28 A;4 mm2;12 AW	X95._
1470	Assemblypa	2.000	PC	3AXD50000010133	ASSEMBLY PLATE HEATER	STEEL HDG 1,0;DEGREAS CLEAN
1480	Heaterunit	1.000	PC	3AXD50000010509	ASSEMBLY DRAWING HEATER 50 AND 100W	
1490		1.000	ST		THERMOSTATBUSBAR	
1500	-F6.1-2	2.000	PC	3AXD50000000921	THERMAL SWITCH KLIXON 1NT01L-3118	1NT01L-3118 L75-11 9638 M, AUTO RESET, S
1510		1.000	ST		+01.3,DSU9	
1520		1.000	ST		DSUModule	
1530	-T1.1-2	2.000	PC	3AUA0000137922	ACS880-304-0490A-3+A018	+A018+P922
1540		1.000	ST		ANTI-CONDENSATIONHEATING	
1550	(-E95.1-X)	1.000	PC	3AXD50000010509	ASSEMBLY DRAWING HEATER 50 AND 100W	
1560	-E95.X	1.000	PC	3AFE09827498	HEATING EQUIPMENT SR50	HEATER 50W/220V(110-270VACDC)
1570	(-E95.X)	1.000	PC	3AUA0000066694	CONNECTOR SSL2.5 3043815	LOCKING ELEMENTS FOR ST-COMBI CONNECTOR
1580	(-E95.X)	1.000	PC	3AXD50000007033	CONNECTOR SC 2,5/ 2	2,50 mm2;24 A;500 V;2-POS. MALE
1590	(-E95.X)	1.000	PC	3AXD50000010133	ASSEMBLY PLATE HEATER	STEEL HDG 1,0;DEGREAS CLEAN
1600	WIRESET	1.000	PC	3AXD50000010440	WIRE HARNESS SET_HP_E95_FRAME_V1	__ - E95
1610	WIRESET	1.000	PC	3AXD50000010441	WIRE HARNESS SET_HP_E95_FRAME_V2	__ - E95
1620		1.000	ST		DSUMODULETERMINAL	
1630	-T1.1-X50	1.000	PC	3AUA0000059813	CONNECTOR STV S 9 SB	9 POLES, 32A 500V 6KV/3 (FEMALE)
1640	-T1.2-X50	1.000	PC	3AUA0000059813	CONNECTOR STV S 9 SB	9 POLES, 32A 500V 6KV/3 (FEMALE)

P345812 / 29711

Cust. Doc. No.	Prep.	Title PART LIST DSU ACS880-307-0910A-3 400V 50 Hz IP22	Item Des. = 01 +
Cust. Ref. No.	App.	SAP Doc. No.	
Customer WMMP	Project Zhaka Jack-up Lift System Zhaka Jack-up Lift System-1	EPLAN Doc. No. 3ABDC230674 - 01	
		ABB Ref. No.	Rev. / Sheet Part list_5
		Resp. Dept.	Cont. &EMA/1

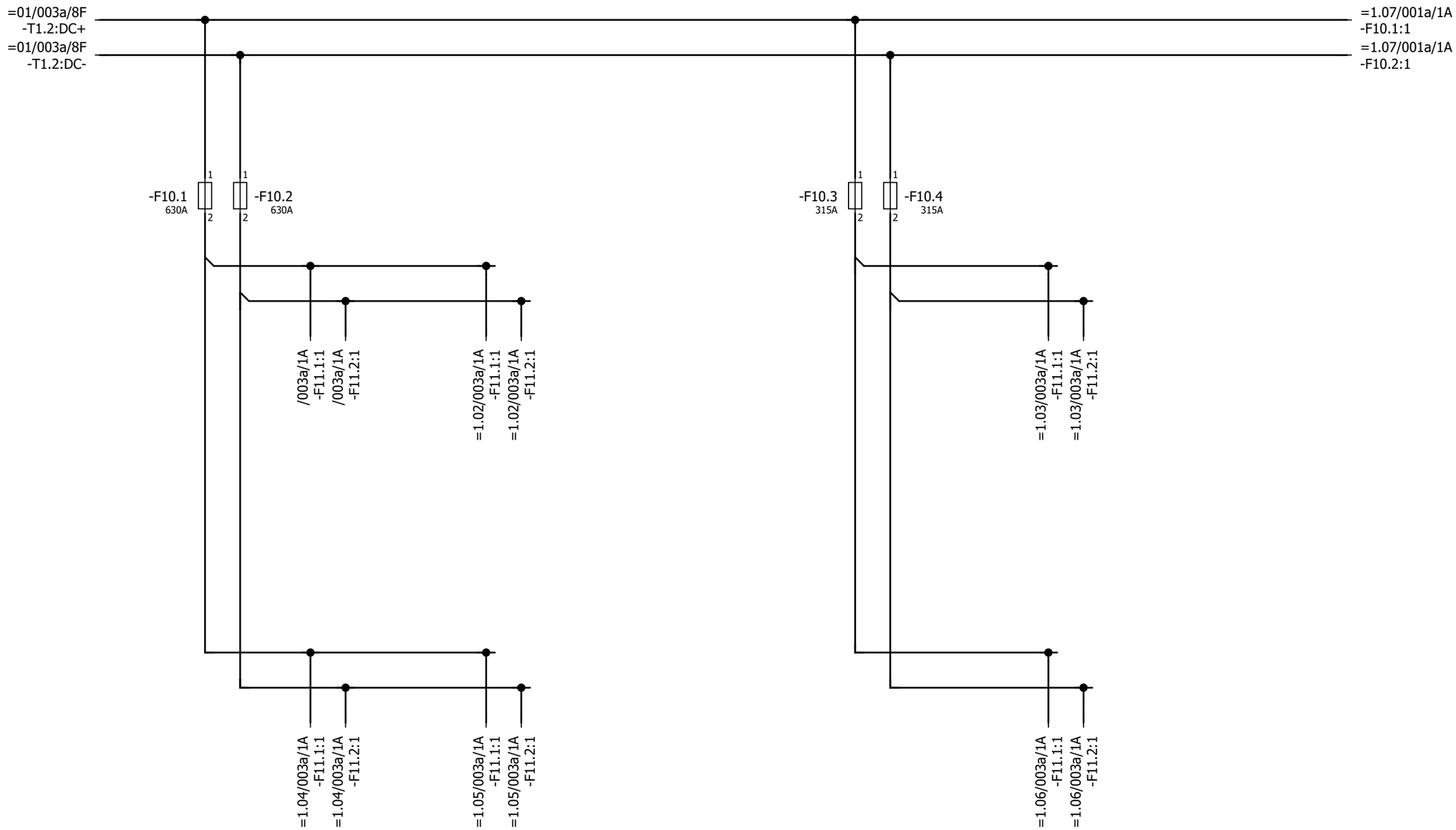

P345812 / 29711

Cust. Doc. No.	Prep. Sky-Xin Zhang 02.08.2023	Title MAIN CIRCUIT	Circuit diagram EFS2	Item Des.	
Cust. Ref. No.	App.	INV1.01	SAP Doc. No.	= 1.01	
Customer WMMP	Project Zhaka Jack-up Lift System	ACS880-107-0078A-3	EPLAN Doc. No. 3ABDC230674 - 1.01	+ 1.01.1	
	Zhaka Jack-up Lift System-1	400V	ABB Ref. No.	Rev. .1	Sheet 001a
			Resp. Dept.	Cont.	003a

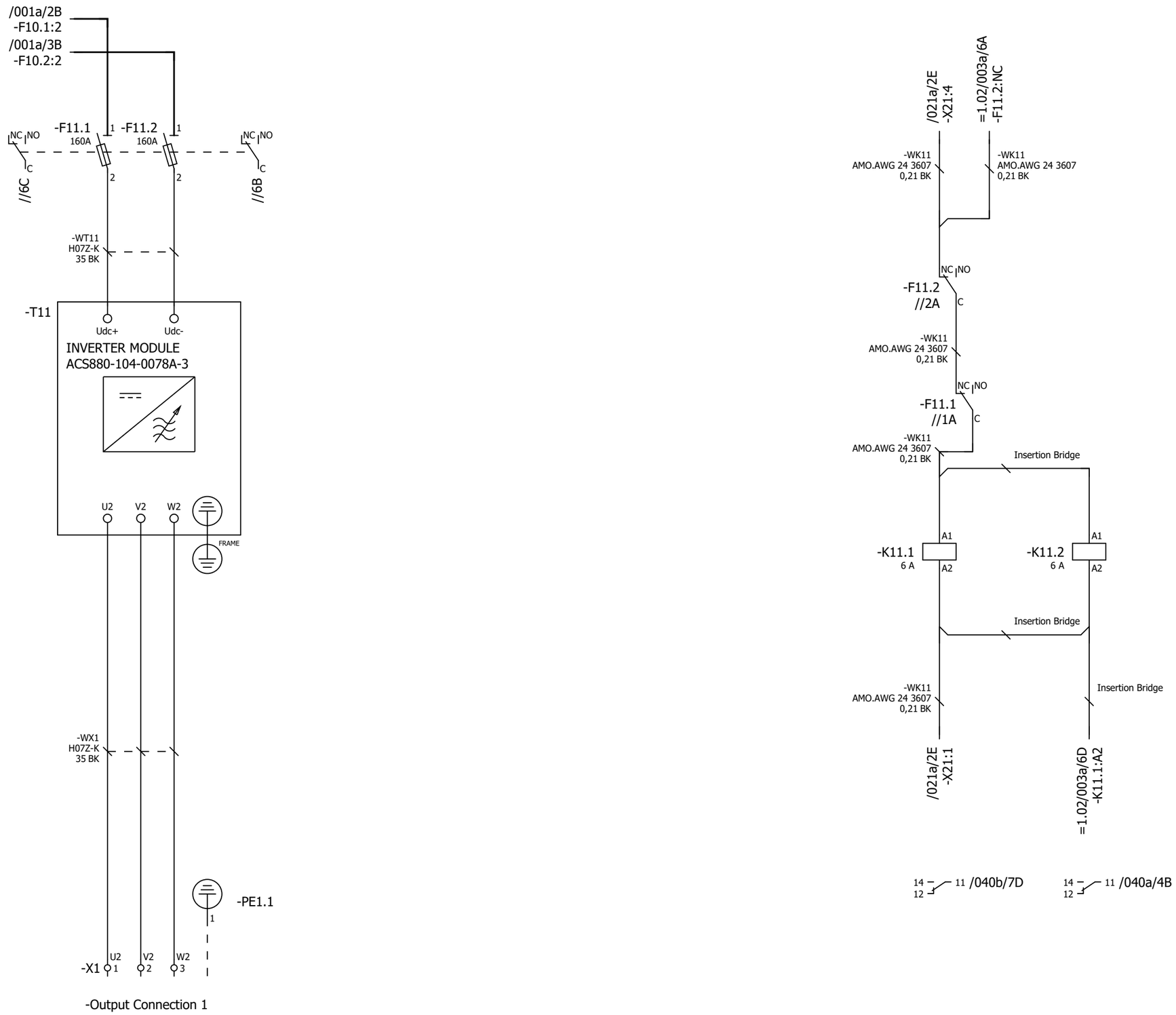

P345812 / 29711

Cust. Doc. No.	Prep. Sky-Xin Zhang 02.08.2023	Title MAIN CIRCUIT	Circuit diagram EFS2
Cust. Ref. No.	App.	INV1.01	SAP Doc. No.
Customer WMMP	Project Zhaka Jack-up Lift System	ACS880-107-0078A-3	EPLAN Doc. No. 3ABDC230674 - 1.01
	Zhaka Jack-up Lift System-1	400V	ABB Ref. No.
			Resp. Dept.

Item Des.
= 1.01
+ 1.01.1

Rev. .1 Sheet 003a
Cont. 020a

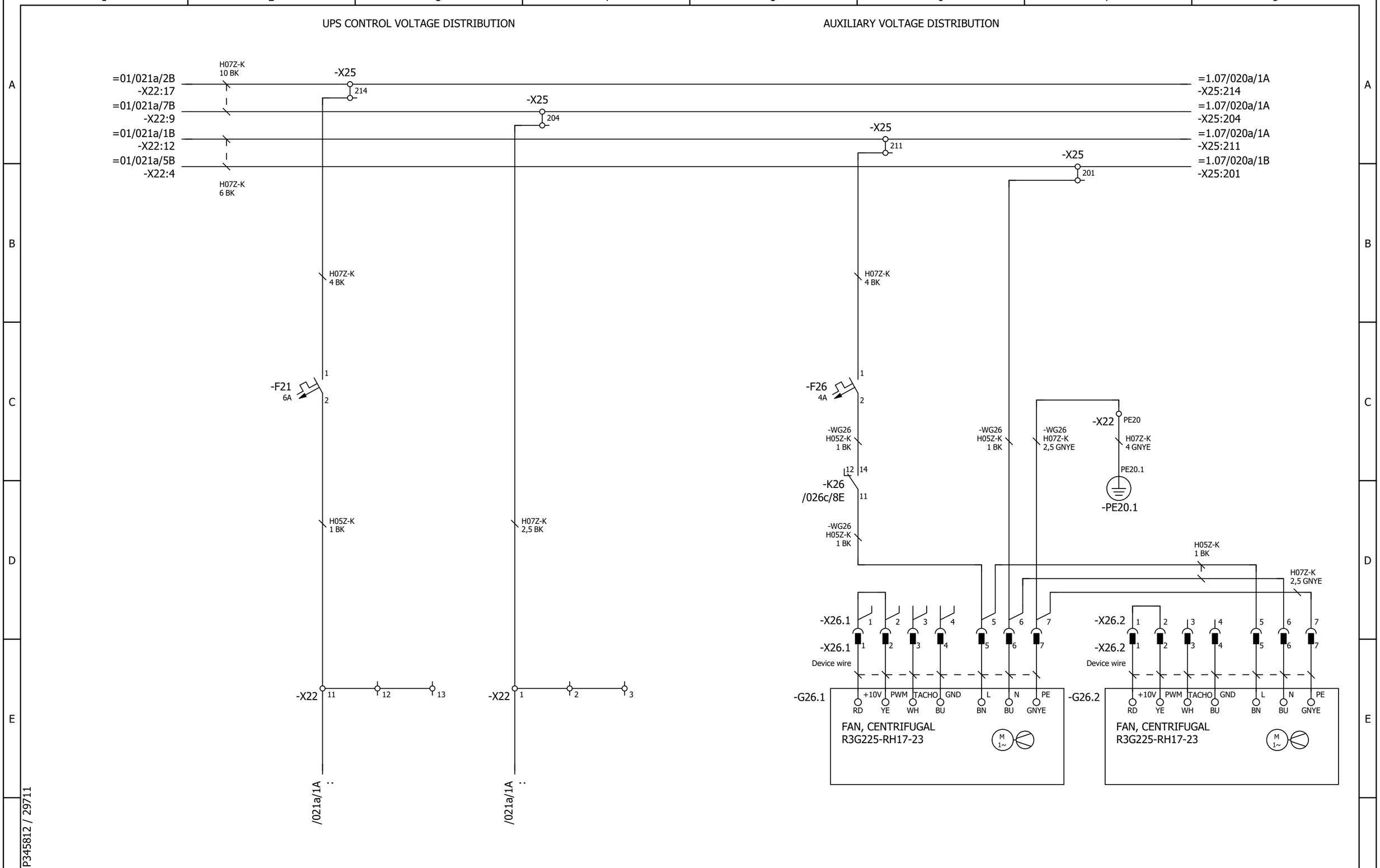

P345812 / 29711

Cust. Doc. No.	Prep. Sky-Xin Zhang 02.08.2023	Title AUXILIARY VOLTAGE DISTRIBUTION	Circuit diagram EFS2	Item Des.	
Cust. Ref. No.	App.	INV1.01	SAP Doc. No.	= 1.01	
Customer WMMP	Project Zhaka Jack-up Lift System	ACS880-107-0078A-3	EPLAN Doc. No. 3ABDC230674 - 1.01	+ 1.01.1	
	Zhaka Jack-up Lift System-1	400V	ABB Ref. No.	Rev. .1	Sheet 020a
			Resp. Dept.	Cont.	021a

24V CONTROL VOLTAGE DISTRIBUTION

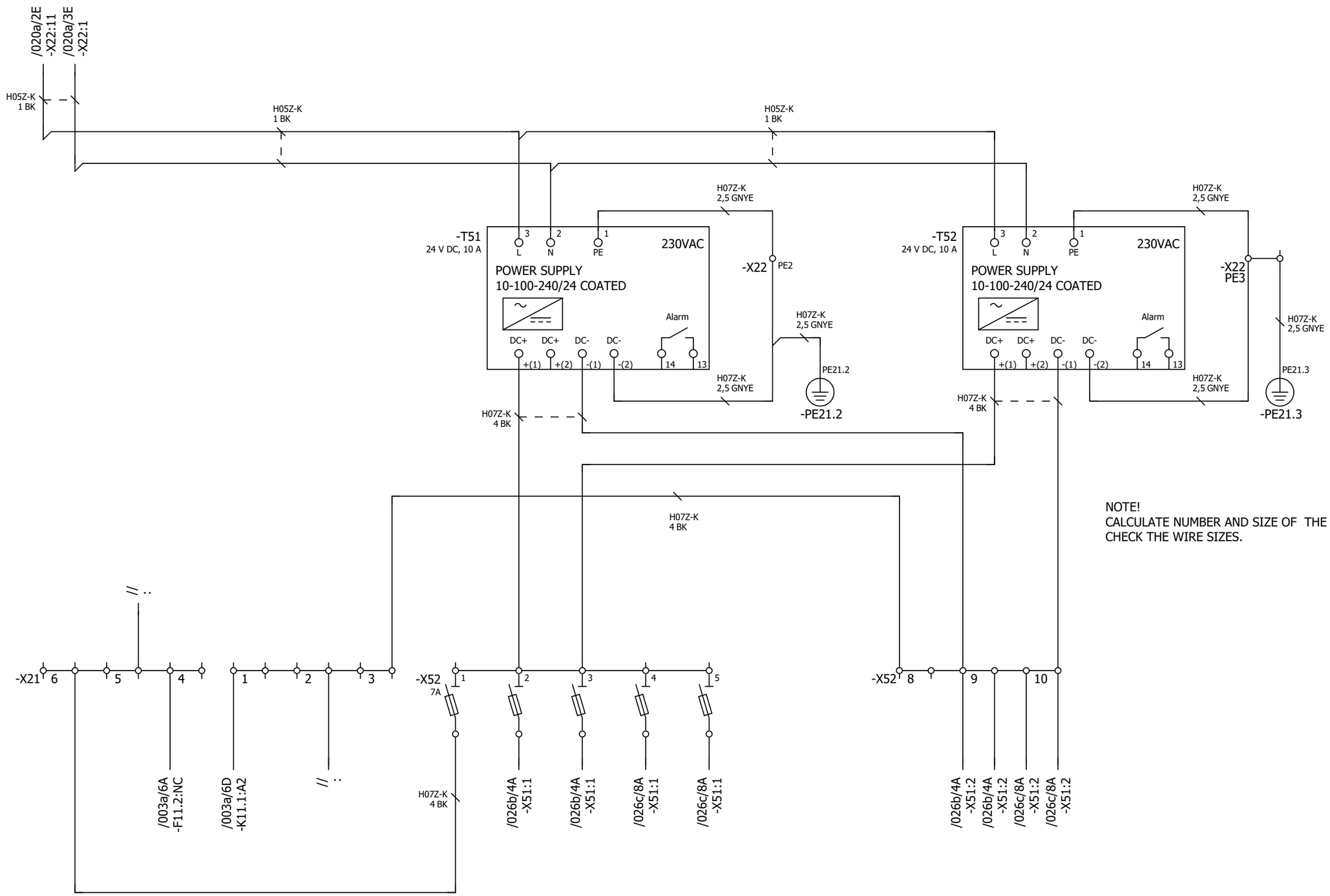

P345812 / 29711

Cust. Doc. No.	Prep. Sky-Xin Zhang 02.08.2023	Title AUXILIARY VOLTAGE DISTRIBUTION	Circuit diagram EFS2	Item Des.	
Cust. Ref. No.	App.	INV1.01	SAP Doc. No.	= 1.01	
Customer WMMP	Project Zhaka Jack-up Lift System	ACS880-107-0078A-3	EPLAN Doc. No. 3ABDC230674 - 1.01	+ 1.01.1	
	Zhaka Jack-up Lift System-1	400V	ABB Ref. No.	Rev. .1	Sheet 021a
			Resp. Dept.	Cont.	026a

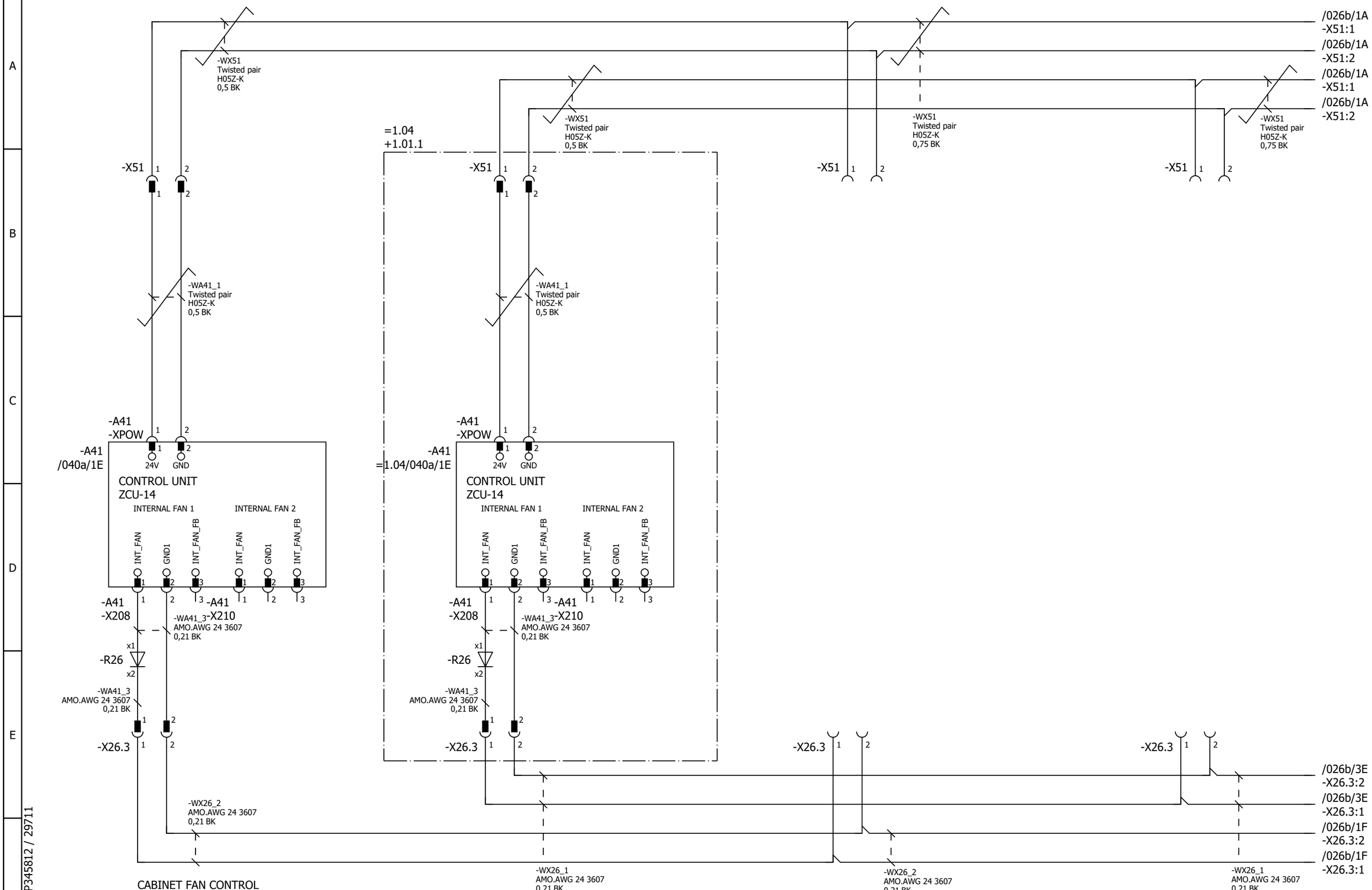

Cust. Doc. No.	Prep. Sky-Xin Zhang 02.08.2023	Title CABINET FAN CONTROL ZCU UPS, 24V FSO, FEA	Circuit diagram EFS2 / Item Des.
Cust. Ref. No.	App.	INV1.01	SAP Doc. No. / = 1.01
Customer WMMP	Project Zhaka Jack-up Lift System	ACS880-107-0078A-3	EPLAN Doc. No. 3ABDC230674 - 1.01 / + 1.01.1
	Zhaka Jack-up Lift System-1	400V	ABB Ref. No. / Rev. .1 / Sheet 026a
			Resp. Dept. / Cont. 026b

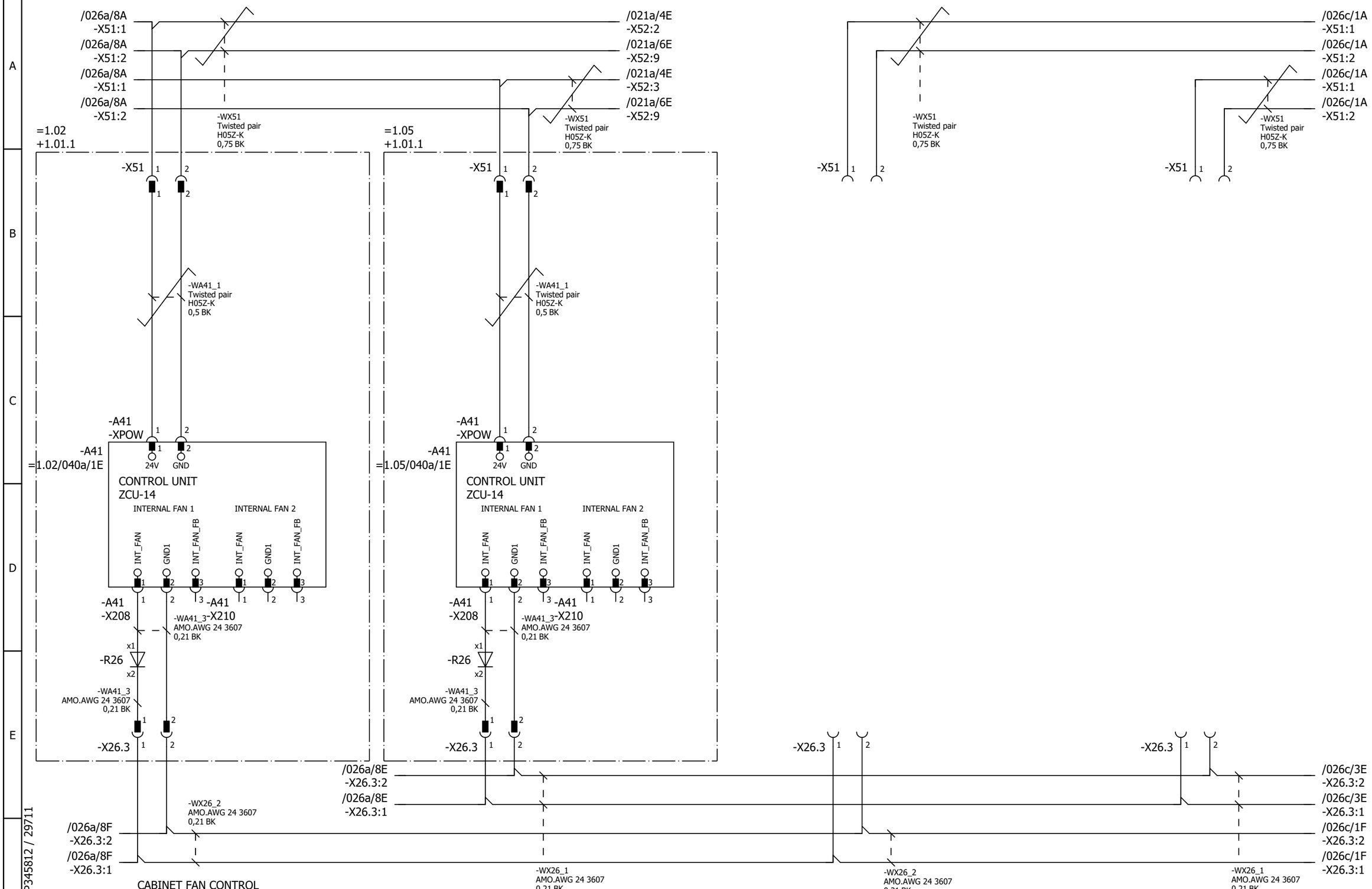

Cust. Doc. No.	Prep. Sky-Xin Zhang 02.08.2023	Title CABINET FAN CONTROL ZCU UPS, 24V FSO, FEA	Circuit diagram EFS2 / Item Des.
Cust. Ref. No.	App.	INV1.01	SAP Doc. No. / = 1.01
Customer WMMP	Project Zhaka Jack-up Lift System	ACS880-107-0078A-3	EPLAN Doc. No. 3ABDC230674 - 1.01 / + 1.01.1
	Zhaka Jack-up Lift System-1	400V	ABB Ref. No. / Rev. .1 / Sheet 026b
			Resp. Dept. / Cont. 026c

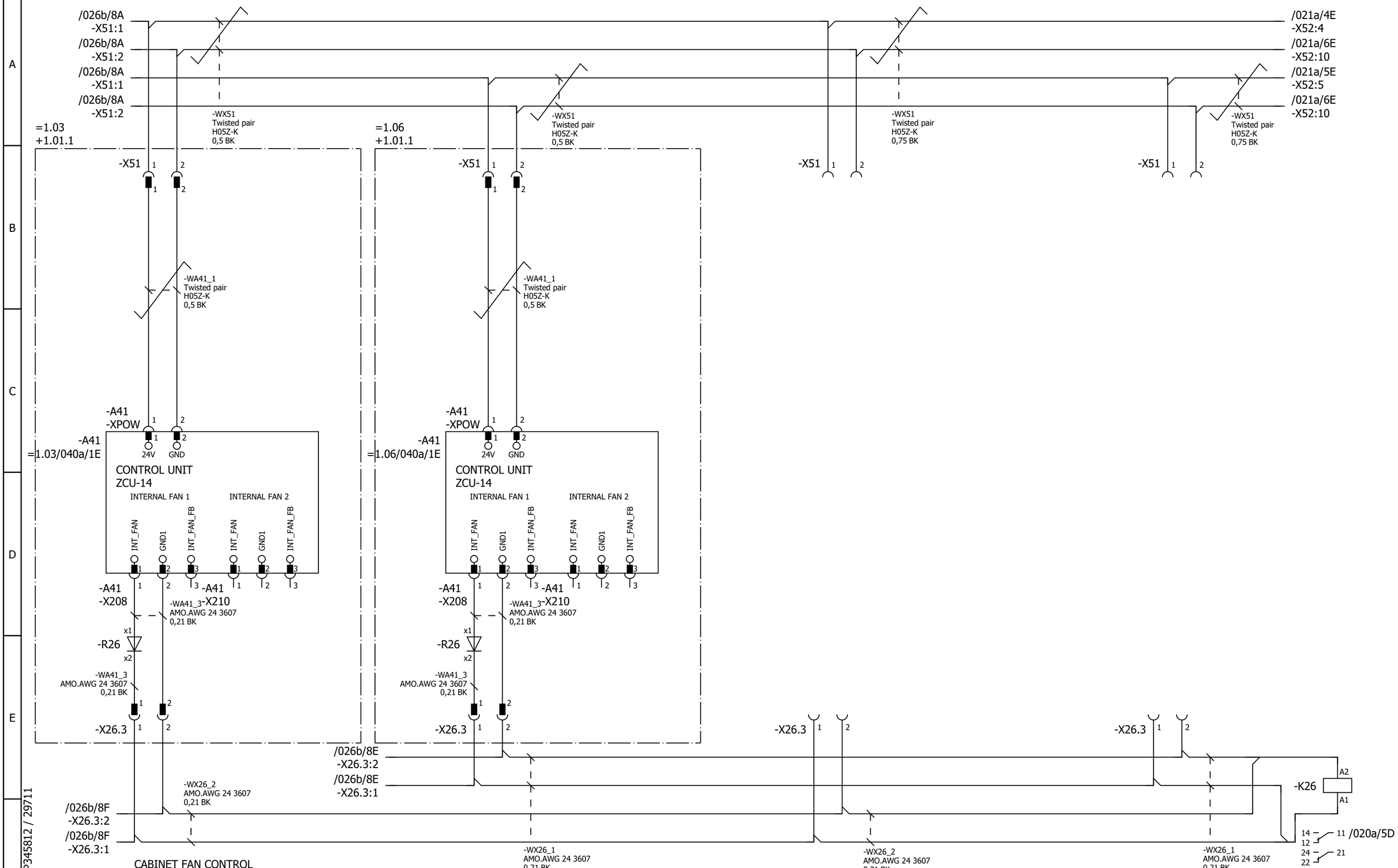

Cust. Doc. No.	Prep. Sky-Xin Zhang 02.08.2023	Title CABINET FAN CONTROL ZCU UPS, 24V FSO, FEA	Circuit diagram EFS2
Cust. Ref. No.	App.	INV1.01	SAP Doc. No.
Customer WMMP	Project Zhaka Jack-up Lift System	ACS880-107-0078A-3	EPLAN Doc. No. 3ABDC230674 - 1.01
	Zhaka Jack-up Lift System-1	400V	ABB Ref. No.
			Resp. Dept.

Item Des. = 1.01 + 1.01.1

Rev. .1 Sheet 026c

Cont. 040a

*) GEN.H05Z-K BK 1,0

Control and status signals	Terminal	Pin
E-STOP FEEDBACK 1 - ESTOP ACTIVE	-XRO1	12
RUNNING 1 - RUNNING	-XRO2	22
FAULT (-1) 1 - NO FAULT	-XRO3	32

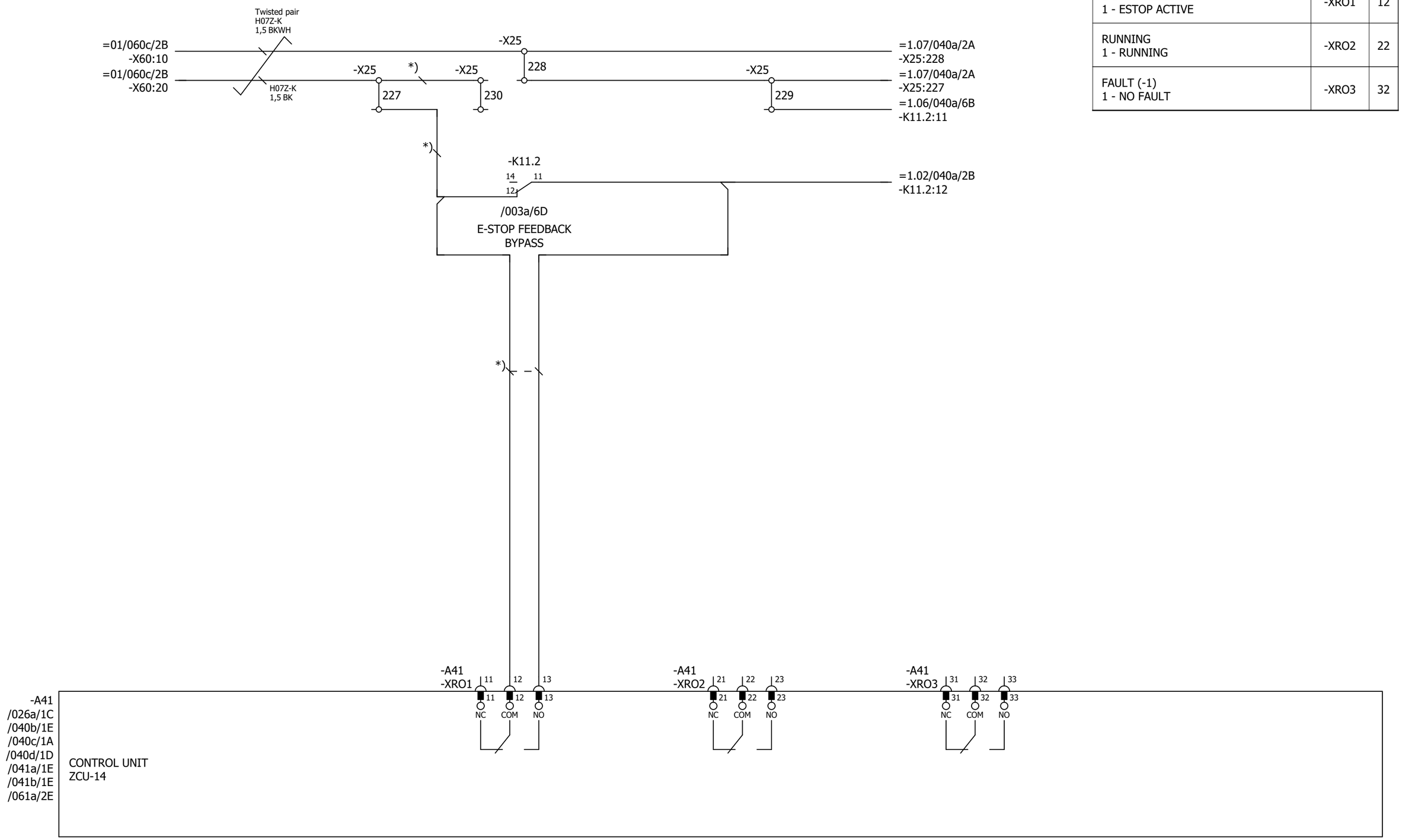

Cust. Doc. No.	Prep. Sky-Xin Zhang 02.08.2023	Title CONTROL BOARD INV1.01 ACS880-107-0078A-3 400V	Circuit diagram EFS2
Cust. Ref. No.	App.		SAP Doc. No.
Customer WMMP	Project Zhaka Jack-up Lift System Zhaka Jack-up Lift System-1		EPLAN Doc. No. 3ABDC230674 - 1.01
			ABB Ref. No.
			Resp. Dept.

Item Des.
= 1.01
+ 1.01.1

Rev. .1 Sheet 040a
Cont. 040b

Control and status signals	Terminal	Pin
DIGITAL INTERLOCK	-XD24	1
START/STOP 1 - START	-XDI	1
FORWARD/REVERSE 1 - REVERSE	-XDI	2
RESET	-XDI	3
EMERGENCY STOP 0 - ACTIVE	-XDI	4
NOT SPECIFIED	-XDI	5
DI6 NOT IN USE	-XDI	6
OUTPUT: READY	-XDIO	1
OUTPUT: RUNNING	-XDIO	2

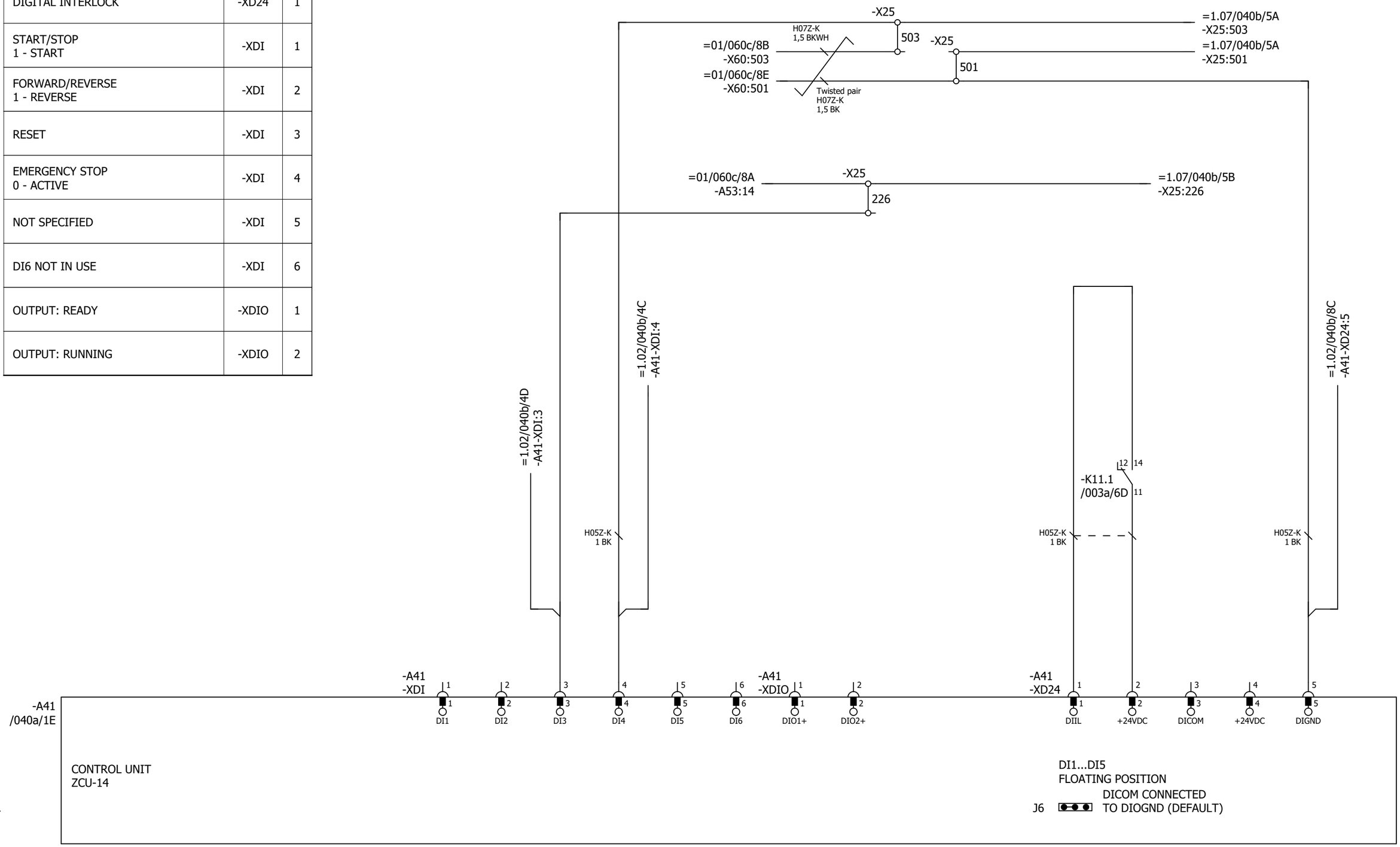

P345812 / 29711

Cust. Doc. No.	Prep. Sky-Xin Zhang 02.08.2023	Title CONTROL BOARD INV1.01 ACS880-107-0078A-3 400V	Circuit diagram EFS2
Cust. Ref. No.	App.		SAP Doc. No.
Customer WMMP	Project Zhaka Jack-up Lift System Zhaka Jack-up Lift System-1		EPLAN Doc. No. 3ABDC230674 - 1.01
			ABB Ref. No.
			Resp. Dept.

Item Des.
= 1.01
+ 1.01.1

Rev. .1 Sheet 040b
Cont. 040c

Control and status signals	Terminal	Pin
MOTOR TEMP. MONITORING 0(2)…10V	-XAI	4
AI2 NOT SPECIFIED BY DEFAULT NOT IN USE 0(4)…20mA	-XAI	6
CURR SOU MOT TEMP MONIT 0(4)...20mA	-XAO	1
CURRENT 0(4)…20mA ↔ 0(4)…MOTOR CURRENT	-XAO	3

P345812 / 29711

Cust. Doc. No.	Prep. Sky-Xin Zhang 02.08.2023	Title CONTROL BOARD INV1.01 ACS880-107-0078A-3 400V	Circuit diagram EFS2
Cust. Ref. No.	App.		SAP Doc. No.
Customer WMMP	Project Zhaka Jack-up Lift System Zhaka Jack-up Lift System-1		EPLAN Doc. No. 3ABDC230674 - 1.01
			ABB Ref. No.
			Resp. Dept.

Item Des.
= 1.01
+ 1.01.1

Rev. .1 Sheet 040c
Cont. 040d

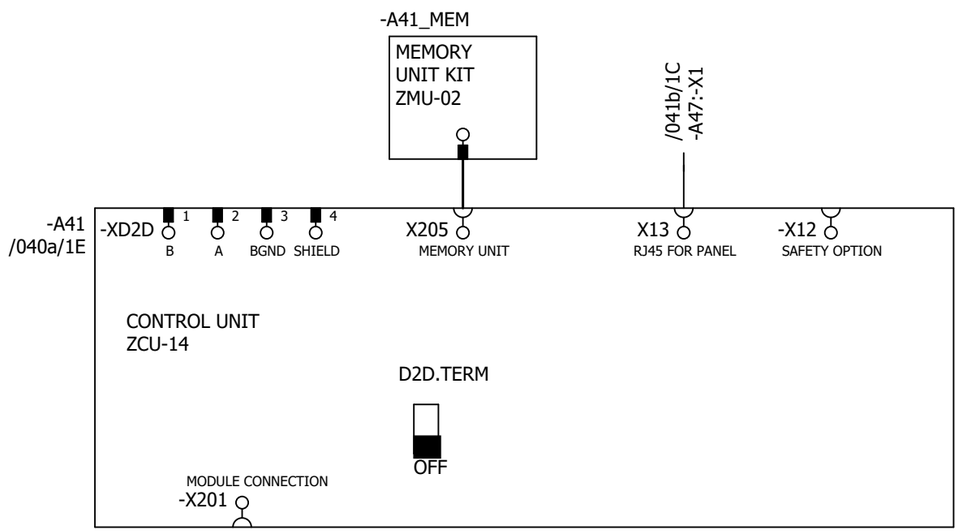

P345812 / 29711

Cust. Doc. No.	Prep. Sky-Xin Zhang 02.08.2023	Title CONTROL BOARD	Circuit diagram EFS2	Item Des.	
Cust. Ref. No.	App.	INV1.01	SAP Doc. No.	= 1.01	
Customer WMMP	Project Zhaka Jack-up Lift System	ACS880-107-0078A-3	EPLAN Doc. No. 3ABDC230674 - 1.01	+ 1.01.1	
	Zhaka Jack-up Lift System-1	400V	ABB Ref. No.	Rev. .1	Sheet 040d
			Resp. Dept.	Cont.	041a

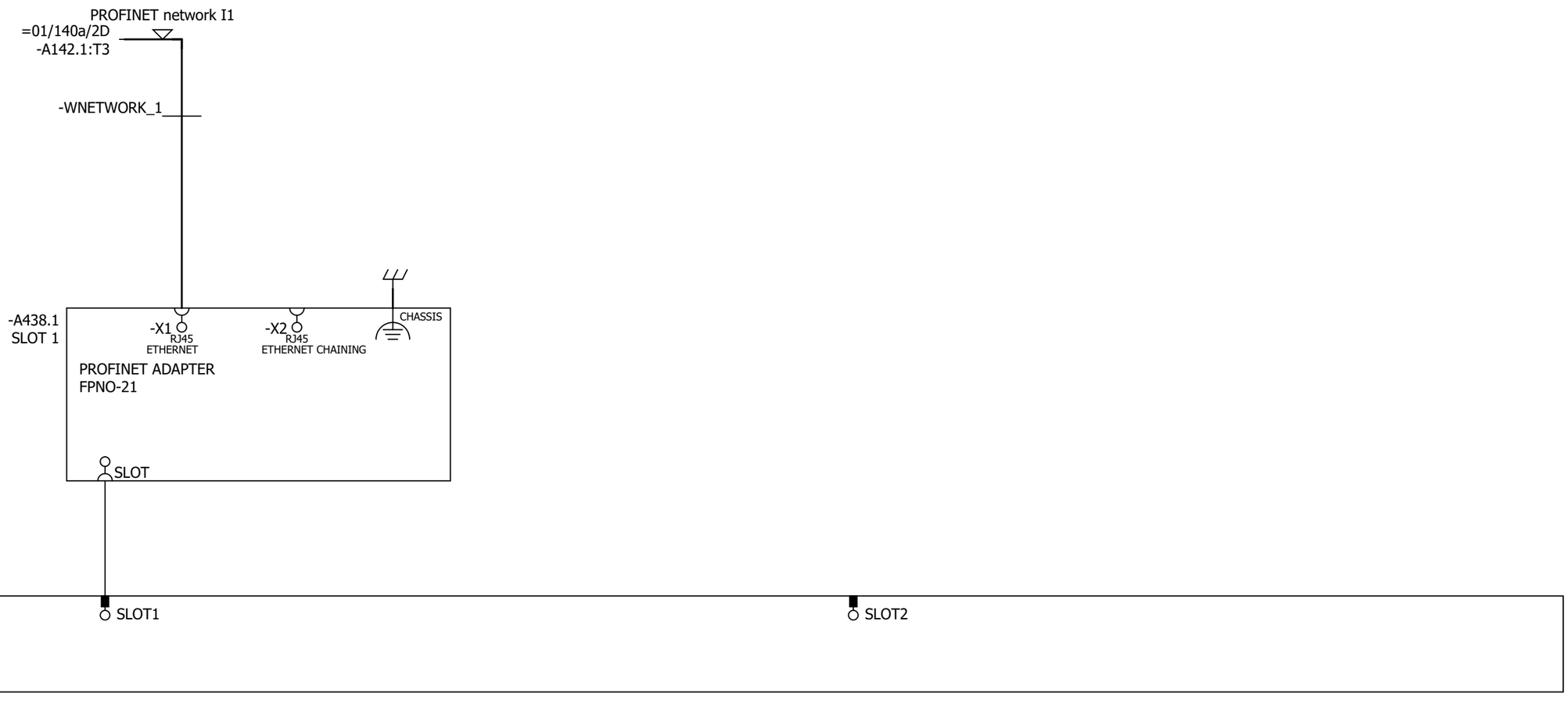

Cust. Doc. No.	Prep. Sky-Xin Zhang 02.08.2023	Title OPTION CARDS	Circuit diagram EFS2	Item Des.	
Cust. Ref. No.	App.	INV1.01	SAP Doc. No.	= 1.01	
Customer WMMP	Project Zhaka Jack-up Lift System	ACS880-107-0078A-3	EPLAN Doc. No. 3ABDC230674 - 1.01	+ 1.01.1	
	Zhaka Jack-up Lift System-1	400V	ABB Ref. No.	Rev. .1	Sheet 041a
			Resp. Dept.	Cont.	041b

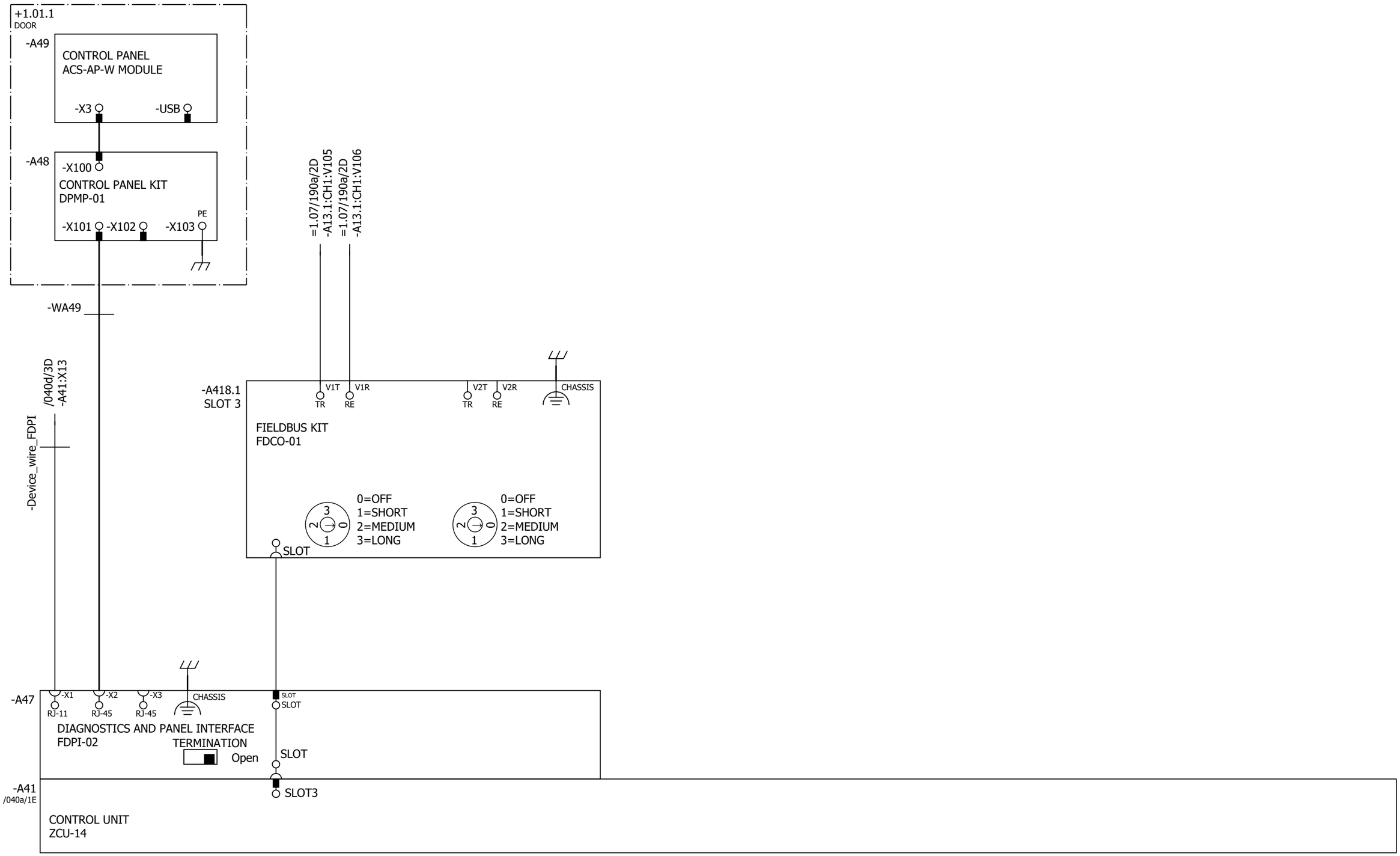

Cust. Doc. No.	Prep. Sky-Xin Zhang 02.08.2023	Title OPTION CARDS	Circuit diagram EFS2
Cust. Ref. No.	App.	INV1.01	SAP Doc. No.
Customer WMMP	Project Zhaka Jack-up Lift System	ACS880-107-0078A-3	EPLAN Doc. No. 3ABDC230674 - 1.01
	Zhaka Jack-up Lift System-1	400V	ABB Ref. No.
			Resp. Dept.

Item Des.
= 1.01
+ 1.01.1

Rev. .1 Sheet 041b
Cont. 061a

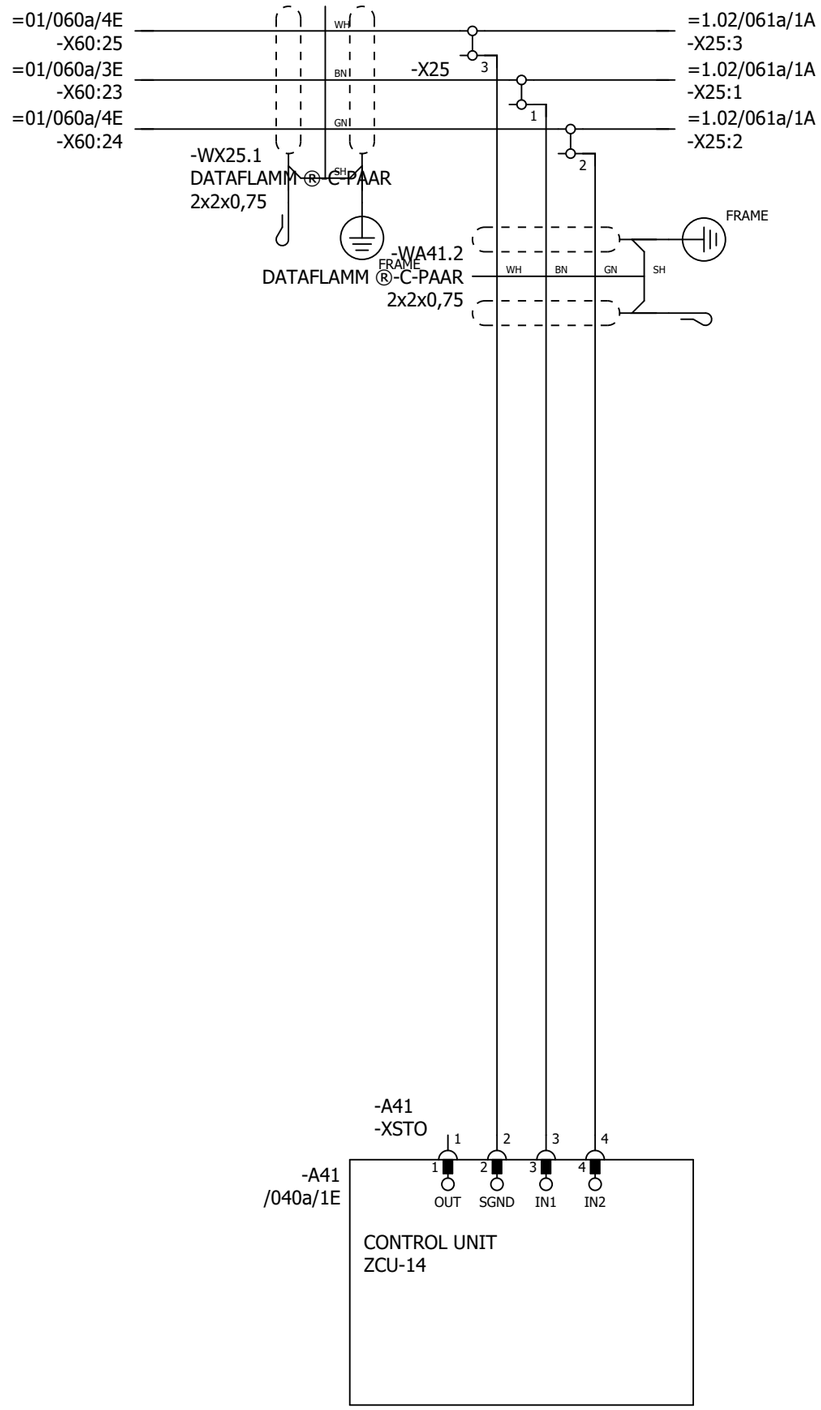

P345812 / 29711

SAFETY CIRCUIT
MACRO REVISION 6
RULES CONVERTED 19.7.2023

Cust. Doc. No.	Prep. Sky-Xin Zhang 02.08.2023	Title SAFETY CIRCUIT	Circuit diagram EFS2
Cust. Ref. No.	App.	INV1.01	SAP Doc. No.
Customer WMMP	Project Zhaka Jack-up Lift System	ACS880-107-0078A-3	EPLAN Doc. No. 3ABDC230674 - 1.01
	Zhaka Jack-up Lift System-1	400V	ABB Ref. No. / Resp. Dept.

Item Des. = 1.01 + 1.01.1

Rev. .1 Sheet 061a

Cont. 095a

CABINET
HEATING

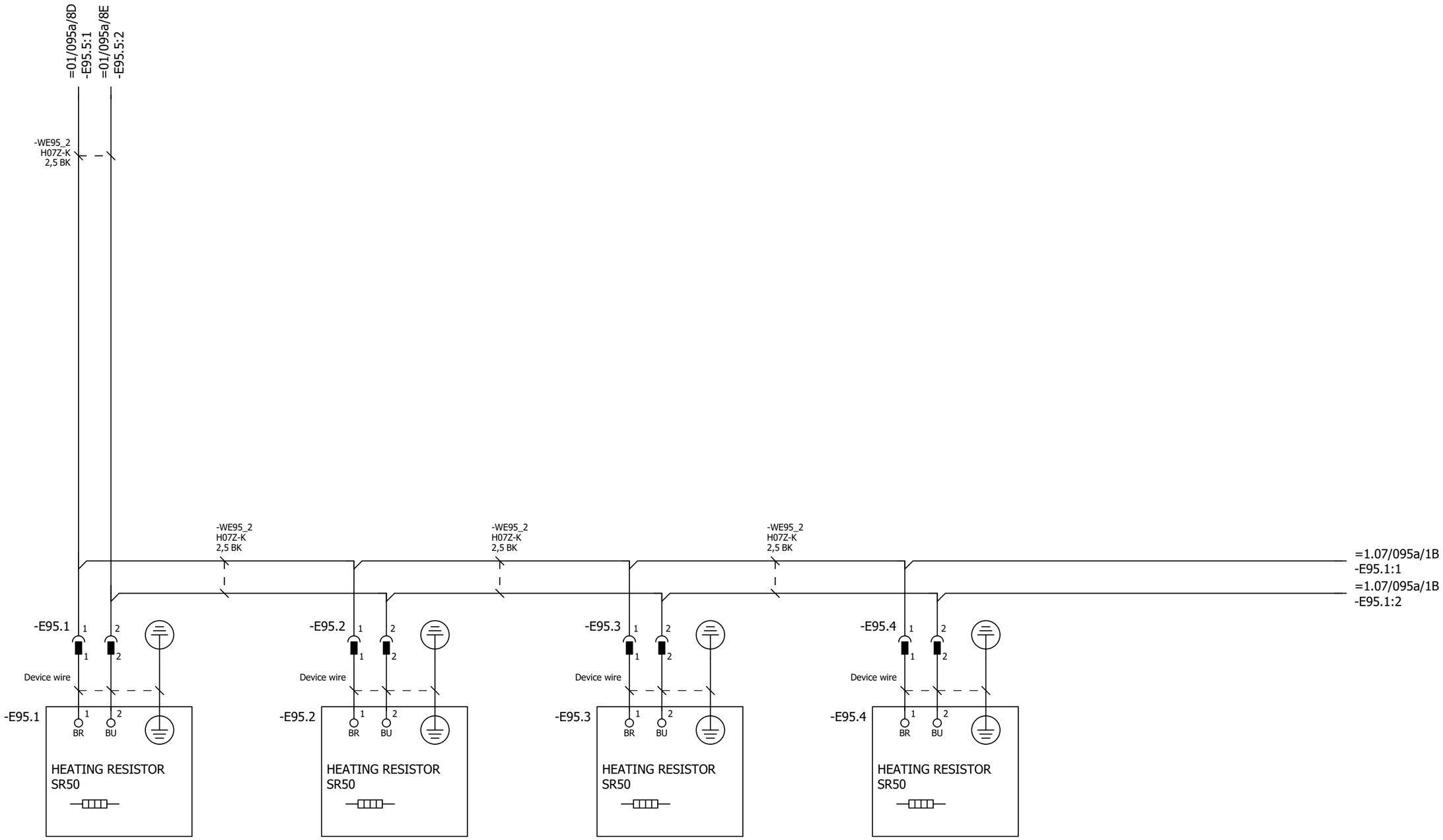

P345812 / 29711

Cust. Doc. No.	Prep. Sky-Xin Zhang 02.08.2023	Title CABINET HEATING	Circuit diagram EFS2	Item Des.	
Cust. Ref. No.	App.	INV1.01	SAP Doc. No.	= 1.01	
Customer WMMP	Project Zhaka Jack-up Lift System	ACS880-107-0078A-3	EPLAN Doc. No. 3ABDC230674 - 1.01	+ 1.01.1	
	Zhaka Jack-up Lift System-1	400V	ABB Ref. No.	Rev. .1	Sheet 095a
			Resp. Dept.	Cont.	&MPC/Part list_1

Part list: 3ABDC230674DU01001

Item	Sort String	Qty.Str	Unit	Component Number	Description and text	Technical data
0010		1.000	ST		ACS880-107-0078A-3+A012+B053+C121+C132+	
0020		1.000	ST		_C206+E210+F272+F287+F288+G300+G307+G315	
0030		1.000	ST		_+G320+G330+G344+H352+H367+J400+K492+K49	
0040		1.000	ST		_3+L503+P913+Q964	
0050		1.000	ST		=1.01	
0060		1.000	ST		+1.01.1,INU3	
0070		1.000	ST		Powerconversionequipment	
0080	-A41_MEM	1.000	PC	3AXD50000006010	MEMORY UNIT KIT ZMU-02	
0090	-T11	1.000	PC	3AUA0000120009-M	ACS880-104-0078A-3+P922	+P922
0100	SCREW	1.000	PC	3AFE68681481	SCREW K30X10 TORX	PT WN1452 ZN
0110	SOFTWARE	1.000	PC	3AUA0000153462	SOFTWARE PRIMARY CONTROL PROGRA	AINF6 FOR ZCU-12/14
0120		1.000	ST		R4imoduleDCfuse	
0130	-F11.1-2	2.000	PC	3AXD50000000219	FUSE FR27UQ69V160T/160A	6.921 CP URQ 27X60MM FERRULE;AR
0140		1.000	ST		R3i-R4imoduleDCfusebase	
0150	(-F11.1-2)	2.000	PC	3AUA0000089227	FUSE HOLDER FUSE BASE US271MI 150A	FUSE BASE US271MI 150A 800V
0160		1.000	ST		motorterminalR4i,coppercable	
0170	-X1	1.000	PC	3ABD50000000270	CONNECTOR PPAC-50	50 MM2;150 A;800V
0180	-X1	1.000	PC	3ABD50000000270	CONNECTOR PPAC-50	50 MM2;150 A;800V
0190	-X1	1.000	PC	3ABD50000000270	CONNECTOR PPAC-50	50 MM2;150 A;800V
0200		1.000	ST		24VDCsupplyZCU	
0210	-WA41_1	1.000	PC	3AXD50000005218	WIRE HARNESS 24VDC SUPPLY X51 ZCU V	HALOGEN FREE;X51_A51
0220		1.000	ST		Rooffancontrol	
0230	-WA41_3	1.000	PC	3AXD50000002688	WIRE HARNESS FAN CONTROL MAIN WIRE	HALOGEN FREE;X208_X26.3
0240		1.000	ST		Toprowmodulewireharness	
0250	-WT11	1.000	PC	3AXD50000002256	WIRE HARNESS R4I FUSE_MODULE V2	HALOGEN FREE;MAIN CIRCUIT WIRE SET
0260	-WX1	1.000	PC	3AXD50000002258	WIRE HARNESS R4I MODULE_OUTPUT TR V	HALOGEN FREE;MAIN CIRCUIT WIRE SET
0270		1.000	ST		Optionmodule	
0280	-A418.1	1.000	PC	3AUA0000107392	COMMUNIC. ADAPTER FDCO-01	
0290		1.000	ST		Controlpanel	
0300	-A47	1.000	PC	3AUA0000108650	FIELDBUS KIT FDPI-02	PANEL BUS ADAPTER
0310	-A48	1.000	PC	3AUA0000108878	CONTROL PANEL KIT DPMP-01	DPMP-01
0320	-A49	1.000	PC	3AXD50000025964	CONTROL PANEL ACS-AP-W MODULE	ASSISTANT PANEL WIRELESS CPU1
0330		1.000	ST		DCfusesupervision	

P345812 / 29711

Cust. Doc. No.	Prep.	Title PART LIST INV1.01 ACS880-107-0078A-3 400V	Item Des. = 1.01 +
Cust. Ref. No.	App.		SAP Doc. No.
Customer WMMP	Project Zhaka Jack-up Lift System Zhaka Jack-up Lift System-1		EPLAN Doc. No. 3ABDC230674 - 1.01
			ABB Ref. No. / Rev. / Sheet Part list_1
			Resp. Dept. / Cont. Part list_2

Part list: 3ABDC230674DU01001

Item	Sort String	Qty.Str	Unit	Component Number	Description and text	Technical data
0340	-K11.1-2	2.000	PC	3AXD50000021313	RELAY DEK_REL_G24/21	250 V;6 A;COIL 24VDC
0350	-WK11	1.000	PC	3AXD50000003220	WIRE HARNESS 6 MODULE 800MM CABINET	HALOGEN FREE;DC FUSE SUPERVISION
0360	-WK11	1.000	PC	3AXD50000003227	WIRE HARNESS 1ST MODULE SUPERV 800M	HALOGEN FREE;DC FUSE SUPERVISION
0370	-WK11	1.000	PC	3AXD50000003228	WIRE HARNESS 2ND MODULE SUPERV 800M	HALOGEN FREE;DC FUSE SUPERVISION
0380	-WK11	1.000	PC	3AXD50000003229	WIRE HARNESS 3RD MODULE SUPERV 800M	HALOGEN FREE;DC FUSE SUPERVISION
0390	-WK11	1.000	PC	3AXD50000003230	WIRE HARNESS 4TH MODULE SUPERV 800M	HALOGEN FREE;DC FUSE SUPERVISION
0400	-WK11	1.000	PC	3AXD50000003231	WIRE HARNESS 5TH MODULE SUPERV 800M	HALOGEN FREE;DC FUSE SUPERVISION
0410	-WK11	1.000	PC	3AXD50000003232	WIRE HARNESS 6TH MODULE SUPERV 800M	HALOGEN FREE;DC FUSE SUPERVISION
0420		1.000	ST		Profinetswitch	
0430		1.000	ST		FieldBus	
0440	-A438.1	1.000	PC	3AXD50000192779	OPTION MODULE FPNO-21	PROFINET IO
0450		1.000	ST		Supplementtorelay	
0460	(-K11.1)	1.000	PC	3AXD50000021312	TERMINAL BLOCK ST EB2_DIK_RD 2716693	2POLE, 6,15 MM PITCH;FOR DEK RELAYS
0470		1.000	ST		CommonDCfuse	
0480	-F10.1-2	2.000	PC	3AXD50000000246	FUSE 170M4416	630 A;690 V;DIN1 FLUSH END;AR;200KA
0490	-F10.3-4	2.000	PC	3AXD50000000234	FUSE 170M4410	315 A;690 V;DIN1 FLUSH END;AR;200KA
0500		1.000	ST		Cabinetfan	
0510	-F26	1.000	PC	3AFE68264758	PROTECTION SWITCH S 201-K4	4A, 440VAC/60VDC
0520	-G26.1	1.000	PC	3AXD50000000592	FAN R3G225-RH17-23	230V;96W;50HZ;60HZ;0,77A;1080M3S CCC,UL
0530	-G26.2	1.000	PC	3AXD50000000592	FAN R3G225-RH17-23	230V;96W;50HZ;60HZ;0,77A;1080M3S CCC,UL
0540	-K26	1.000	PC	3AUA0000102191	RELAY RCL425024-SOCKET-DIODE	8 A;24 V;24VDC, 2C/O
0550	-X26.1	1.000	PC	3AXD50000000723	TERMINAL BLOCK AS X26 FAN SUPPLY PLUG	12,00 AWG;2,50 mm2;24,00 A;500,00 V
0560	(-X26.1)	1.000	PC	3AXD50000000724	TERMINAL BLOCK AS X26 FAN SUPPLY SOCKET	12,00 AWG;2,50 mm2;24,00 A;500,00 V
0570	-X26.2	1.000	PC	3AXD50000000723	TERMINAL BLOCK AS X26 FAN SUPPLY PLUG	12,00 AWG;2,50 mm2;24,00 A;500,00 V
0580	(-X26.2)	1.000	PC	3AXD50000000724	TERMINAL BLOCK AS X26 FAN SUPPLY SOCKET	12,00 AWG;2,50 mm2;24,00 A;500,00 V
0590		1.000	ST		Auxvoltagedistribution	
0600	-X22	1.000	PC	3AXD50000001632	TERMINAL BLOCK AS X22	12 AWG;2 mm2;24 A;800 V
0610	-X25	1.000	PC	3AXD50000001609	TERMINAL BLOCK AS X25 (1)	6 AWG;10 mm2;57 A;800 V
0620	-X25	1.000	PC	3ABD00609550	ASSEMBLY PLATE FOR X25 TERMINAL	acs880
0630		1.000	ST		EMSTOPterminalblock	
0640	-X25	1.000	PC	3AXD50000001610	TERMINAL BLOCK AS X25 (2)	12 AWG;2 mm2;24 A;500 V
0650		1.000	ST		STOterminalblock	
0660	-X25	1.000	PC	3AXD50000001631	TERMINAL BLOCK AS X60	12 AWG;2 mm2;24 A;500 V

P345812 / 29711

Cust. Doc. No.	Prep.	Title PART LIST INV1.01 ACS880-107-0078A-3 400V	Item Des. = 1.01 +
Cust. Ref. No.	App.		SAP Doc. No.
Customer WMMP	Project Zhaka Jack-up Lift System Zhaka Jack-up Lift System-1		EPLAN Doc. No. 3ABDC230674 - 1.01
			ABB Ref. No. / Rev. / Sheet Part list_2
			Resp. Dept. / Cont. Part list_3

Part list: 3ABDC230674DU01001

Item	Sort String	Qty.Str	Unit	Component Number	Description and text	Technical data
0670		1.000	ST		24vDCdistributionwithUPS	
0680	-F21	1.000	PC	3AFE68264766	PROTECTION SWITCH S 201-K6	S 201-K6
0690		1.000	ST		24VDCsupply	
0700	-WX51	1.000	PC	3AXD50000005214	WIRE HARNESS 24VDC SUPPLY 800MM V2	HALOGEN FREE;X52_X51
0710		1.000	ST		Cabinetrooffansupply	
0720	-WG26	1.000	PC	3AXD50000036922	WIRE HARNESS CABINET ROOF FAN SUPPL	R1I-R4I 800/1000MM
0730		1.000	ST		Cabinetrooffancontrol	
0740	-WX26_1	1.000	PC	3AXD50000005080	WIRE HARNESS 800MM CABINET LOWER RO	HALOGEN FREE;X26.3_X26.4
0750	-WX26_2	1.000	PC	3AXD50000005078	WIRE HARNESS 800MM CABINET UPPER RO	HALOGEN FREE;X26.3_K26
0760		1.000	ST		24VDCdistribution	
0770	-F52.1-5	5.000	PC	3AXD50000005465	FUSE MDL-7-R	7 A;250 V;¼" x 1¼";GLASS TUBE;TIME-DELAY
0780	-T22	1.000	PC	3ABD00010542	POWER SUPPLY NDR-120-24	24V 5A
0790	-X21	1.000	PC	3AXD50000001633	TERMINAL BLOCK AS X21	12 AWG;2 mm2;24 A;800 V
0800	-X52	1.000	PC	3AXD50000005221	TERMINAL BLOCK AS 24VDC X52 TERM BLOCK 5	10 AWG;4 mm2;10 A;500 V;fuse size 6,3x32
0810		1.000	ST		24vDCdistribution	
0820	-T51	1.000	PC	3ABD00010602	POWER SUPPLY NDR-240-24	24V 10A
0830	-T52	1.000	PC	3ABD00010602	POWER SUPPLY NDR-240-24	24V 10A
0840		1.000	ST		Cabinetheaters	
0850	-E95.1-4	4.000	PC	3AFE09827498	HEATING EQUIPMENT SR50	HEATER 50W/220V(110-270VACDC)
0860	(-E95.1-4)	4.000	PC	3AXD50000010133	ASSEMBLY PLATE HEATER	STEEL HDG 1,0;DEGREAS CLEAN
0870	(-E95.1-4)	1.000	PC	3AXD50000010509	ASSEMBLY DRAWING HEATER 50 AND 100W	
0880	X95.1A-4A	4.000	PC	3AXD50000007033	CONNECTOR SC 2,5/ 2	2,50 mm2;24 A;500 V;2-POS. MALE
0890	X95.1B-4B	4.000	PC	3AUA0000066694	CONNECTOR SSL2.5 3043815	LOCKING ELEMENTS FOR ST-COMBI CONNECTOR
0900		1.000	ST		Supplementforrelay	
0910	(-K11)	2.000	PC	3AXD50000021311	CONNECTOR EB 10-DIK RD 2716774	10POLE, 6,15 MM PITCH;FOR DEK RELAYS
0920	(-K11)	1.000	PC	3AXD50000021314	RELAY D-DEK_1,5_GN	end plate

P345812 / 29711

Cust. Doc. No.	Prep.	Title PART LIST INV1.01 ACS880-107-0078A-3 400V	Item Des. = 1.01 +
Cust. Ref. No.	App.		SAP Doc. No.
Customer WMMP	Project Zhaka Jack-up Lift System Zhaka Jack-up Lift System-1		EPLAN Doc. No. 3ABDC230674 - 1.01
			ABB Ref. No. / Rev. / Sheet Part list_3
			Resp. Dept. / Cont. &EMA/1

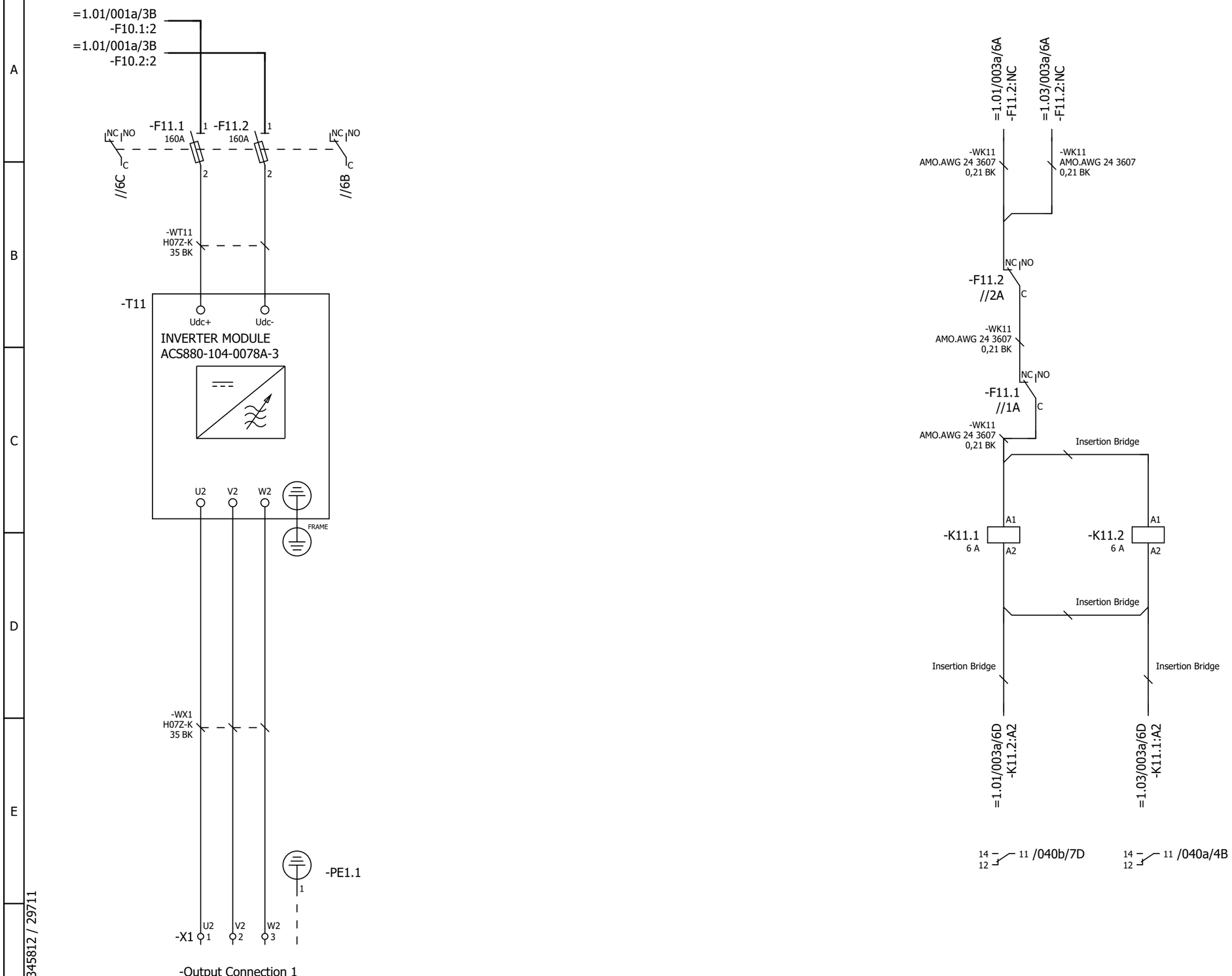

P345812 / 29711

Cust. Doc. No.	Prep. Sky-Xin Zhang 02.08.2023	Title MAIN CIRCUIT	Circuit diagram EFS2
Cust. Ref. No.	App.	INV1.02	SAP Doc. No.
Customer WMMP	Project Zhaka Jack-up Lift System	ACS880-107-0078A-3	EPLAN Doc. No. 3ABDC230674 - 1.02
	Zhaka Jack-up Lift System-1	400V	ABB Ref. No.
			Resp. Dept.

Item Des.
= 1.02
+ 1.01.1

Rev. .1 Sheet 003a
Cont. 013a

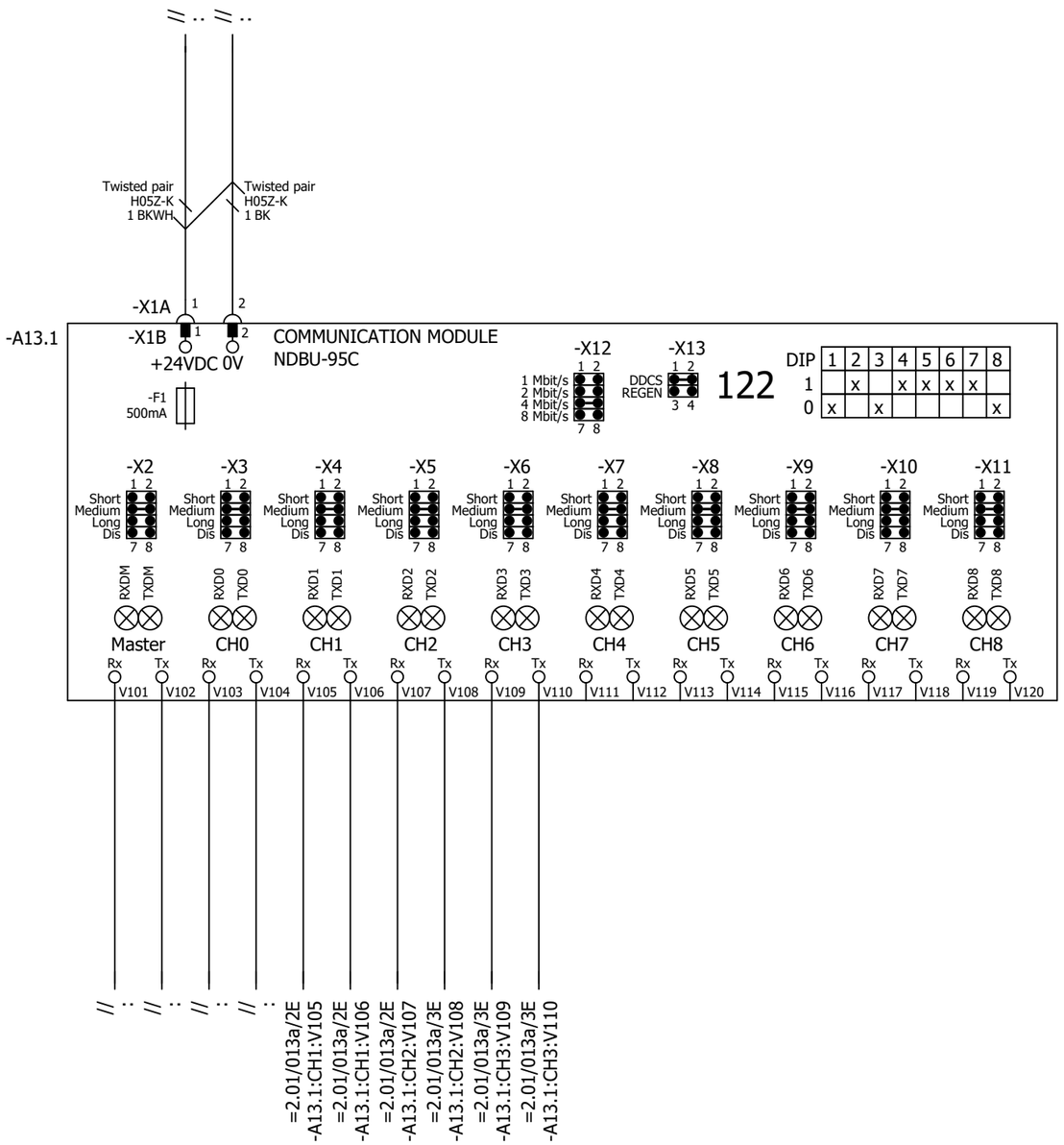

P345812 / 29711

Cust. Doc. No.	Prep. Sky-Xin Zhang 02.08.2023	Title DDCS BRANCHING UNIT	Circuit diagram EFS2	Item Des.	
Cust. Ref. No.	App.	INV1.02	SAP Doc. No.	= 1.02	
Customer WMMP	Project Zhaka Jack-up Lift System	ACS880-107-0078A-3	EPLAN Doc. No. 3ABDC230674 - 1.02	+ 1.01.1	
	Zhaka Jack-up Lift System-1	400V	ABB Ref. No.	Rev. .1	Sheet 013a
			Resp. Dept.	Cont.	040a

Control and status signals	Terminal	Pin
E-STOP FEEDBACK 1 - ESTOP ACTIVE	-XRO1	12
RUNNING 1 - RUNNING	-XRO2	22
FAULT (-1) 1 - NO FAULT	-XRO3	32

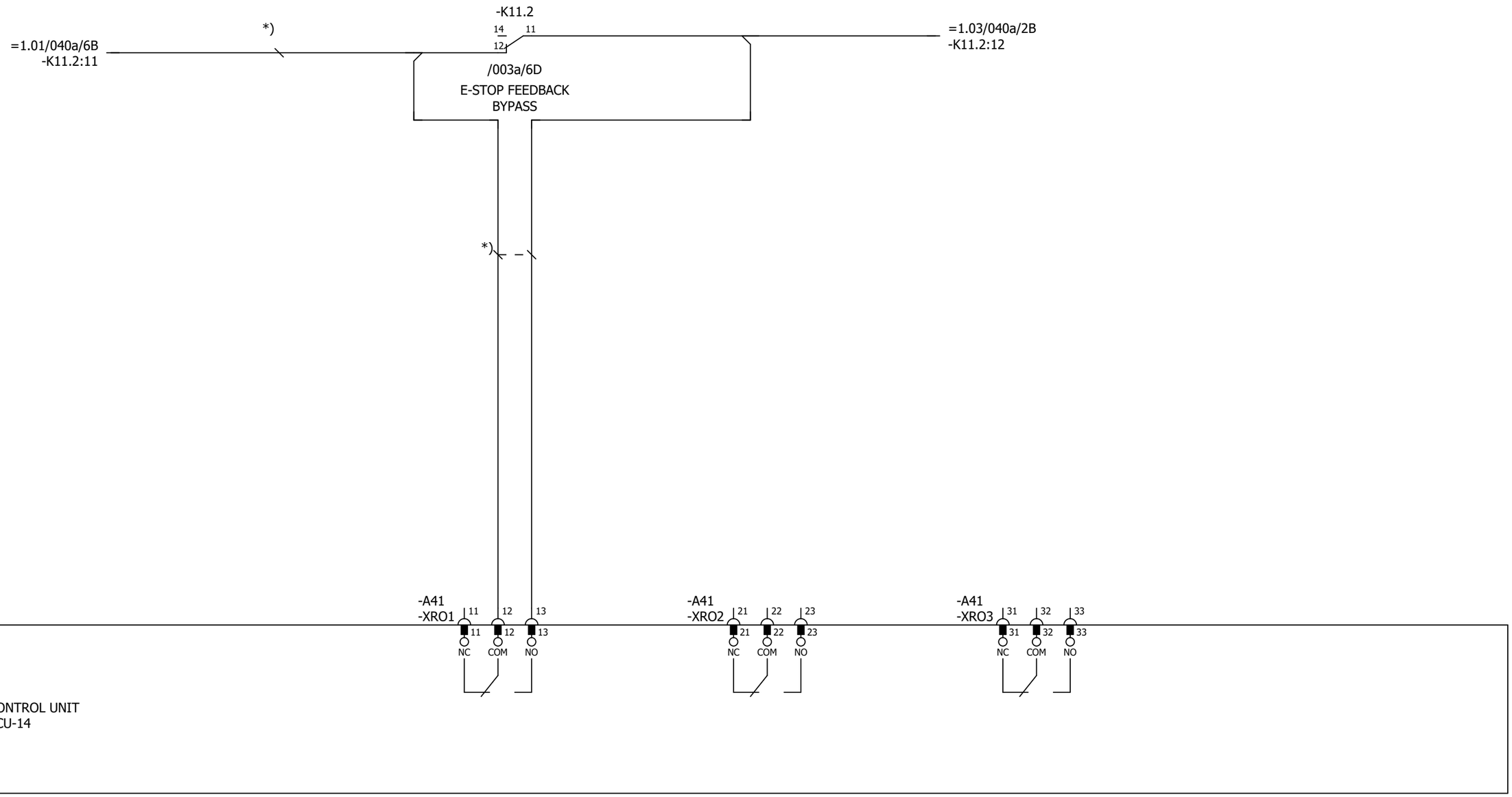

Cust. Doc. No.	Prep. Sky-Xin Zhang 02.08.2023	Title CONTROL BOARD INV1.02 ACS880-107-0078A-3 400V	Circuit diagram EFS2
Cust. Ref. No.	App.		SAP Doc. No.
Customer WMMP	Project Zhaka Jack-up Lift System Zhaka Jack-up Lift System-1		EPLAN Doc. No. 3ABDC230674 - 1.02
			ABB Ref. No.
			Resp. Dept.

Item Des.
= 1.02
+ 1.01.1

Rev. .1 Sheet 040a
Cont. 040b

Control and status signals	Terminal	Pin
DIGITAL INTERLOCK	-XD24	1
START/STOP 1 - START	-XDI	1
FORWARD/REVERSE 1 - REVERSE	-XDI	2
RESET	-XDI	3
EMERGENCY STOP 0 - ACTIVE	-XDI	4
NOT SPECIFIED	-XDI	5
DI6 NOT IN USE	-XDI	6
OUTPUT: READY	-XDIO	1
OUTPUT: RUNNING	-XDIO	2

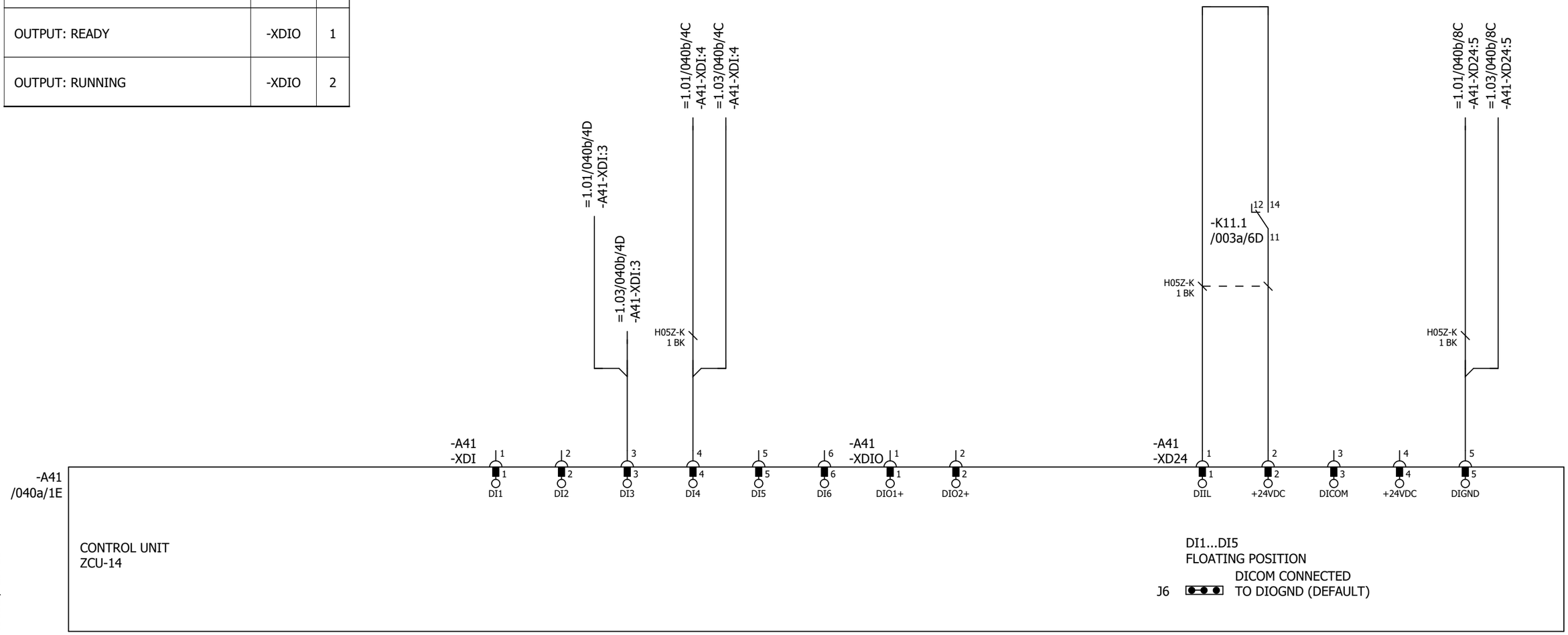

P345812 / 29711

Cust. Doc. No.	Prep. Sky-Xin Zhang 02.08.2023	Title CONTROL BOARD INV1.02 ACS880-107-0078A-3 400V	Circuit diagram EFS2
Cust. Ref. No.	App.		SAP Doc. No.
Customer WMMP	Project Zhaka Jack-up Lift System Zhaka Jack-up Lift System-1		EPLAN Doc. No. 3ABDC230674 - 1.02
			ABB Ref. No.
			Resp. Dept.

Item Des.
= 1.02
+ 1.01.1

Rev. .1 Sheet 040b
Cont. 040c

Control and status signals	Terminal	Pin
MOTOR TEMP. MONITORING 0(2)…10V	-XAI	4
AI2 NOT SPECIFIED BY DEFAULT NOT IN USE 0(4)…20mA	-XAI	6
CURR SOU MOT TEMP MONIT 0(4)...20mA	-XAO	1
CURRENT 0(4)…20mA ↔ 0(4)…MOTOR CURRENT	-XAO	3

P345812 / 29711

Cust. Doc. No.	Prep. Sky-Xin Zhang 02.08.2023	Title CONTROL BOARD INV1.02 ACS880-107-0078A-3 400V	Circuit diagram EFS2
Cust. Ref. No.	App.		SAP Doc. No.
Customer WMMP	Project Zhaka Jack-up Lift System Zhaka Jack-up Lift System-1		EPLAN Doc. No. 3ABDC230674 - 1.02
			ABB Ref. No.
			Resp. Dept.

Item Des.
= 1.02
+ 1.01.1

Rev. .1 Sheet 040c
Cont. 040d

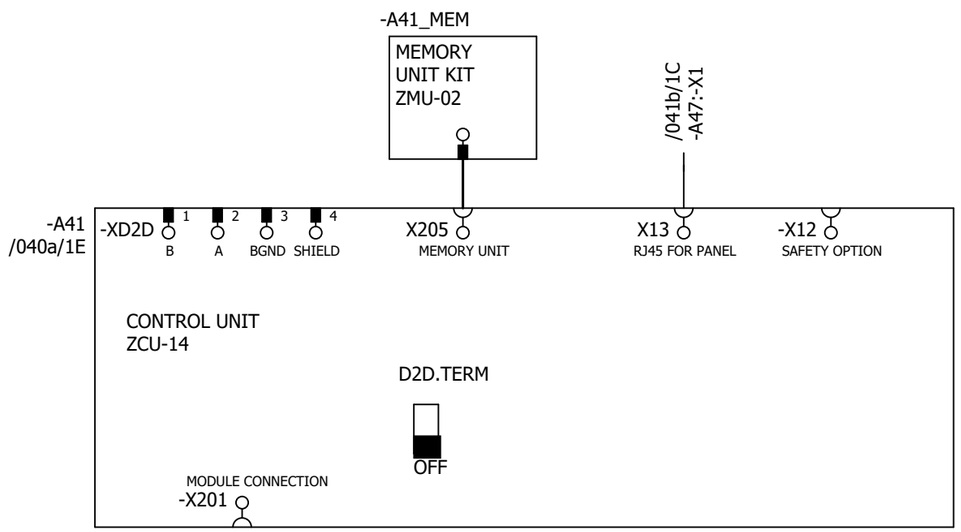

P345812 / 29711

Cust. Doc. No.	Prep. Sky-Xin Zhang 02.08.2023	Title CONTROL BOARD INV1.02 ACS880-107-0078A-3 400V	Circuit diagram EFS2
Cust. Ref. No.	App.		SAP Doc. No.
Customer WMMP	Project Zhaka Jack-up Lift System Zhaka Jack-up Lift System-1		EPLAN Doc. No. 3ABDC230674 - 1.02
			ABB Ref. No.
			Resp. Dept.

Item Des.	= 1.02 + 1.01.1
Rev. .1	Sheet 040d
Cont.	041a

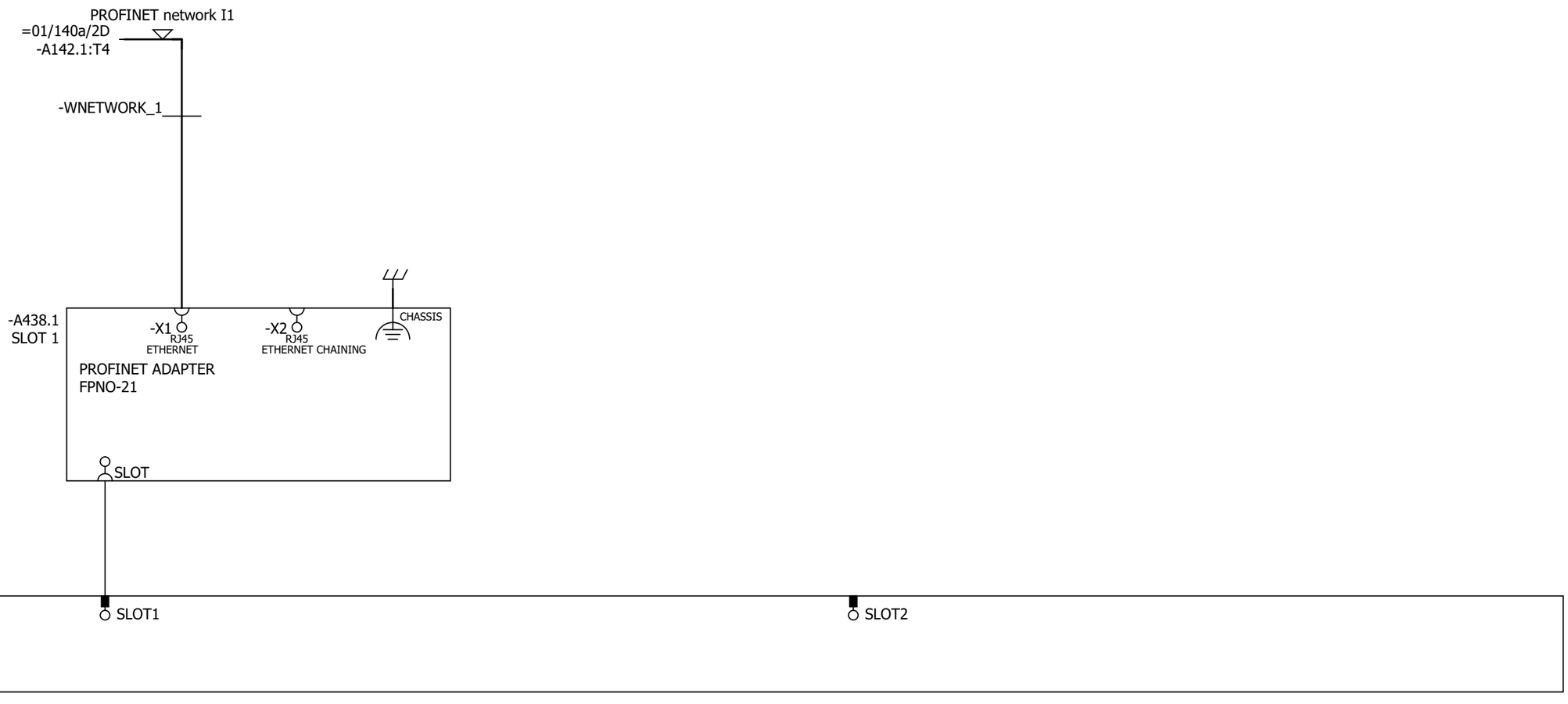

Cust. Doc. No.	Prep. Sky-Xin Zhang 02.08.2023	Title OPTION CARDS	Circuit diagram EFS2
Cust. Ref. No.	App.	INV1.02	SAP Doc. No.
Customer WMMP	Project Zhaka Jack-up Lift System	ACS880-107-0078A-3	EPLAN Doc. No. 3ABDC230674 - 1.02
	Zhaka Jack-up Lift System-1	400V	ABB Ref. No.
			Resp. Dept.

Item Des. = 1.02 + 1.01.1

Rev. .1 Sheet 041a

Cont. 041b

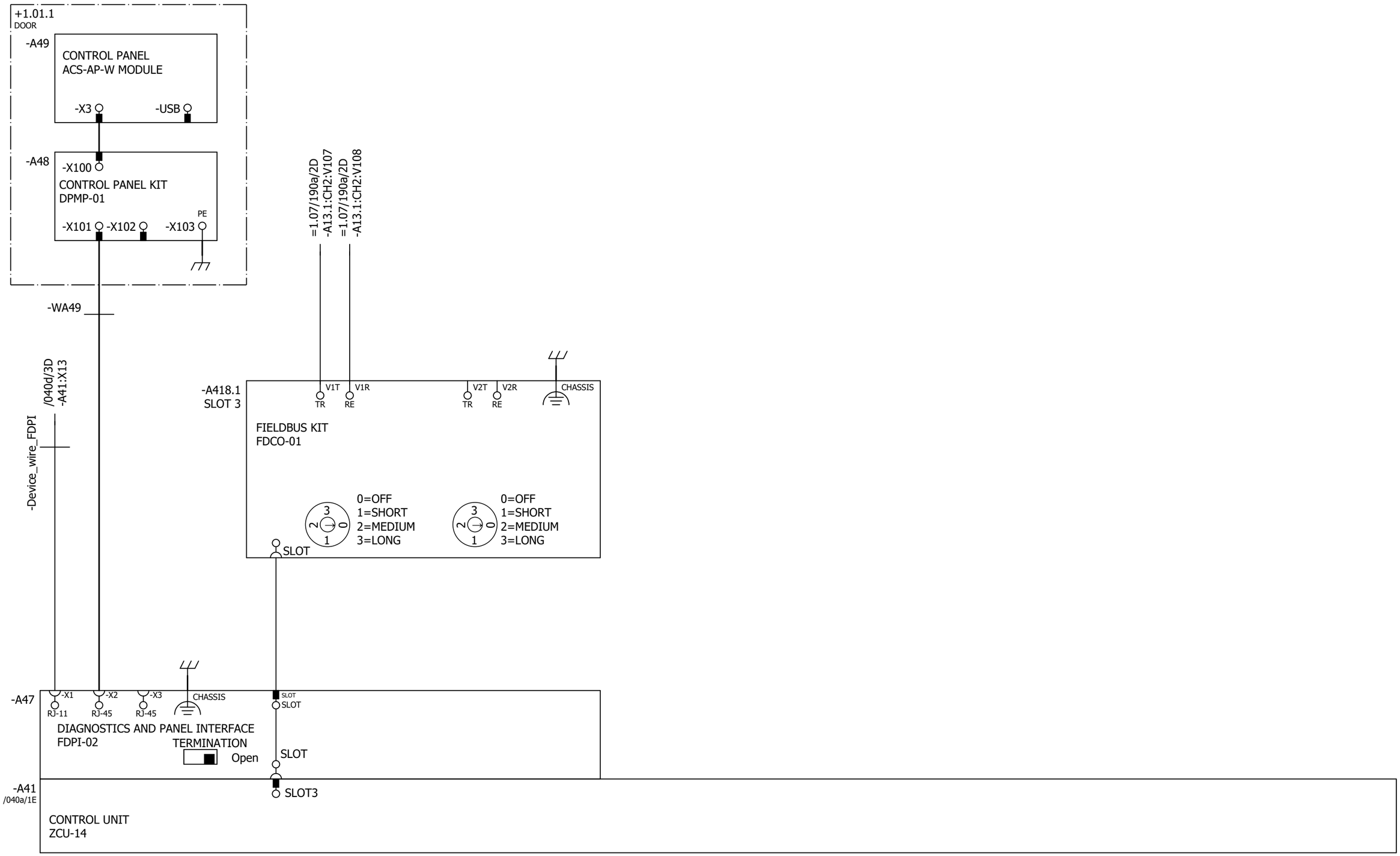

Cust. Doc. No.	Prep. Sky-Xin Zhang 02.08.2023	Title OPTION CARDS	Circuit diagram EFS2	Item Des.
Cust. Ref. No.	App.	INV1.02	SAP Doc. No.	= 1.02
Customer WMMP	Project Zhaka Jack-up Lift System	ACS880-107-0078A-3	EPLAN Doc. No. 3ABDC230674 - 1.02	+ 1.01.1
	Zhaka Jack-up Lift System-1	400V	ABB Ref. No.	Rev. .1 Sheet 041b
			Resp. Dept.	Cont. 061a

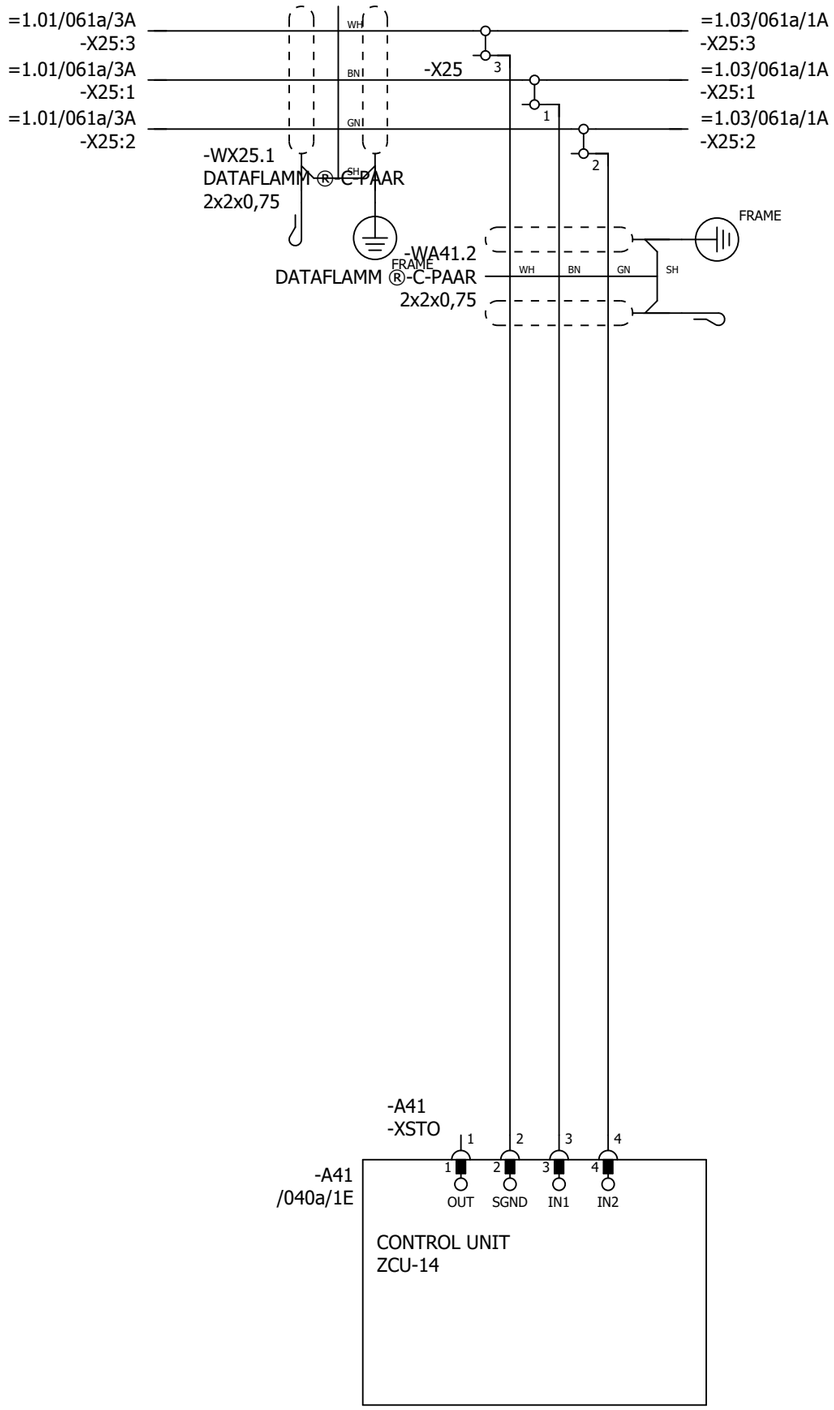

P345812 / 29711

SAFETY CIRCUIT
MACRO REVISION 6
RULES CONVERTED 19.7.2023

Cust. Doc. No.	Prep. Sky-Xin Zhang 02.08.2023	Title SAFETY CIRCUIT	Circuit diagram EFS2	Item Des.	
Cust. Ref. No.	App.	INV1.02	SAP Doc. No.	= 1.02	
Customer WMMP	Project Zhaka Jack-up Lift System	ACS880-107-0078A-3	EPLAN Doc. No. 3ABDC230674 - 1.02	+ 1.01.1	
	Zhaka Jack-up Lift System-1	400V	ABB Ref. No.	Rev. .1	Sheet 061a
			Resp. Dept.	Cont.	&MPC/Part list_1

Part list: 3ABDC230674DU01002

Item	Sort String	Qty.Str	Unit	Component Number	Description and text	Technical data
0010		1.000	ST		ACS880-107-0078A-3+A012+B053+C121+C132+	
0020		1.000	ST		_C206+E210+F272+F287+F288+G300+G307+G315	
0030		1.000	ST		_+G320+G330+G344+H352+H367+J400+K492+L50	
0040		1.000	ST		_3+P913+Q964	
0050		1.000	ST		=1.02	
0060		1.000	ST		+1.01.1,INU3	
0070		1.000	ST		Powerconversionequipment	
0080	-A41_MEM	1.000	PC	3AXD50000006010	MEMORY UNIT KIT ZMU-02	
0090	-T11	1.000	PC	3AUA0000120009-M	ACS880-104-0078A-3+P922	+P922
0100	SCREW	1.000	PC	3AFE68681481	SCREW K30X10 TORX	PT WN1452 ZN
0110	SOFTWARE	1.000	PC	3AUA0000153462	SOFTWARE PRIMARY CONTROL PROGRA	AINF6 FOR ZCU-12/14
0120		1.000	ST		R4imoduleDCfuse	
0130	-F11.1-2	2.000	PC	3AXD50000000219	FUSE FR27UQ69V160T/160A	6.921 CP URQ 27X60MM FERRULE;AR
0140		1.000	ST		R3i-R4imoduleDCfusebase	
0150	(-F11.1-2)	2.000	PC	3AUA0000089227	FUSE HOLDER FUSE BASE US271MI 150A	FUSE BASE US271MI 150A 800V
0160		1.000	ST		motorterminalR4i,coppercable	
0170	-X1	1.000	PC	3ABD50000000270	CONNECTOR PPAC-50	50 MM2;150 A;800V
0180	-X1	1.000	PC	3ABD50000000270	CONNECTOR PPAC-50	50 MM2;150 A;800V
0190	-X1	1.000	PC	3ABD50000000270	CONNECTOR PPAC-50	50 MM2;150 A;800V
0200		1.000	ST		24VDCsupplyZCU	
0210	-WA41_1	1.000	PC	3AXD50000005218	WIRE HARNESS 24VDC SUPPLY X51 ZCU V	HALOGEN FREE;X51_A51
0220		1.000	ST		Rooffancontrol	
0230	-WA41_3	1.000	PC	3AXD50000002688	WIRE HARNESS FAN CONTROL MAIN WIRE	HALOGEN FREE;X208_X26.3
0240		1.000	ST		Toprowmodulewireharness	
0250	-WT11	1.000	PC	3AXD50000002256	WIRE HARNESS R4I FUSE_MODULE V2	HALOGEN FREE;MAIN CIRCUIT WIRE SET
0260	-WX1	1.000	PC	3AXD50000002258	WIRE HARNESS R4I MODULE_OUTPUT TR V	HALOGEN FREE;MAIN CIRCUIT WIRE SET
0270		1.000	ST		Optionmodule	
0280	-A418.1	1.000	PC	3AUA0000107392	COMMUNIC. ADAPTER FDCO-01	
0290		1.000	ST		Controlpanel	
0300	-A47	1.000	PC	3AUA0000108650	FIELDBUS KIT FDPI-02	PANEL BUS ADAPTER
0310	-A48	1.000	PC	3AUA0000108878	CONTROL PANEL KIT DPMP-01	DPMP-01
0320	-A49	1.000	PC	3AXD50000025964	CONTROL PANEL ACS-AP-W MODULE	ASSISTANT PANEL WIRELESS CPU1
0330		1.000	ST		DCfusesupervision	

P345812 / 29711

Cust. Doc. No.	Prep.	Title PART LIST INV1.02 ACS880-107-0078A-3 400V	Item Des. = 1.02 +
Cust. Ref. No.	App.		SAP Doc. No.
Customer WMMP	Project Zhaka Jack-up Lift System Zhaka Jack-up Lift System-1		EPLAN Doc. No. 3ABDC230674 - 1.02
			ABB Ref. No. / Rev. / Sheet Part list_1
			Resp. Dept. / Cont. Part list_2

Part list: 3ABDC230674DU01002

Item	Sort String	Qty.Str	Unit	Component Number	Description and text	Technical data
0340	-K11.1-2	2.000	PC	3AXD50000021313	RELAY DEK_REL_G24/21	250 V;6 A;COIL 24VDC
0350		1.000	ST		FieldBus	
0360	-A438.1	1.000	PC	3AXD50000192779	OPTION MODULE FPNO-21	PROFINET IO
0370		1.000	ST		Supplementtorelay	
0380	(-K11.1)	1.000	PC	3AXD50000021312	TERMINAL BLOCK ST EB2_DIK_RD 2716693	2POLE, 6,15 MM PITCH;FOR DEK RELAYS

P345812 / 29711

Cust. Doc. No.	Prep.	Title PART LIST INV1.02 ACS880-107-0078A-3 400V	Item Des. = 1.02 +
Cust. Ref. No.	App.		SAP Doc. No.
Customer WMMP	Project Zhaka Jack-up Lift System Zhaka Jack-up Lift System-1		EPLAN Doc. No. 3ABDC230674 - 1.02
			ABB Ref. No. / Rev. / Sheet Part list_2
			Resp. Dept. / Cont. &EMA/1

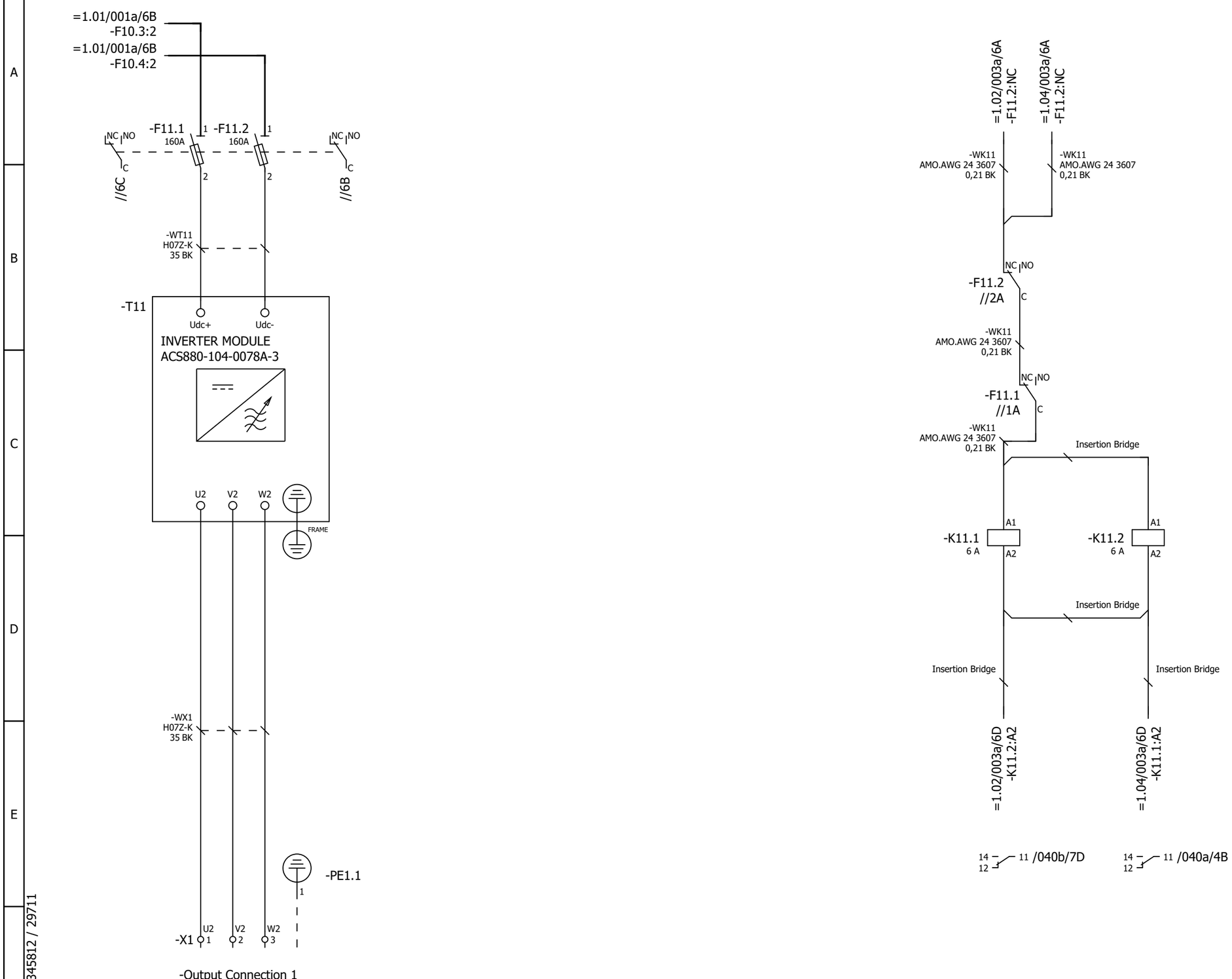

P345812 / 29711

Cust. Doc. No.	Prep. Sky-Xin Zhang 02.08.2023	Title MAIN CIRCUIT	Circuit diagram EFS2
Cust. Ref. No.	App.	INV1.03	SAP Doc. No.
Customer WMMP	Project Zhaka Jack-up Lift System	ACS880-107-0078A-3	EPLAN Doc. No. 3ABDC230674 - 1.03
	Zhaka Jack-up Lift System-1	400V	ABB Ref. No.
			Resp. Dept.

Item Des.
= 1.03
+ 1.01.1

Rev. .1 Sheet 003a
Cont. 040a

Control and status signals	Terminal	Pin
E-STOP FEEDBACK 1 - ESTOP ACTIVE	-XRO1	12
RUNNING 1 - RUNNING	-XRO2	22
FAULT (-1) 1 - NO FAULT	-XRO3	32

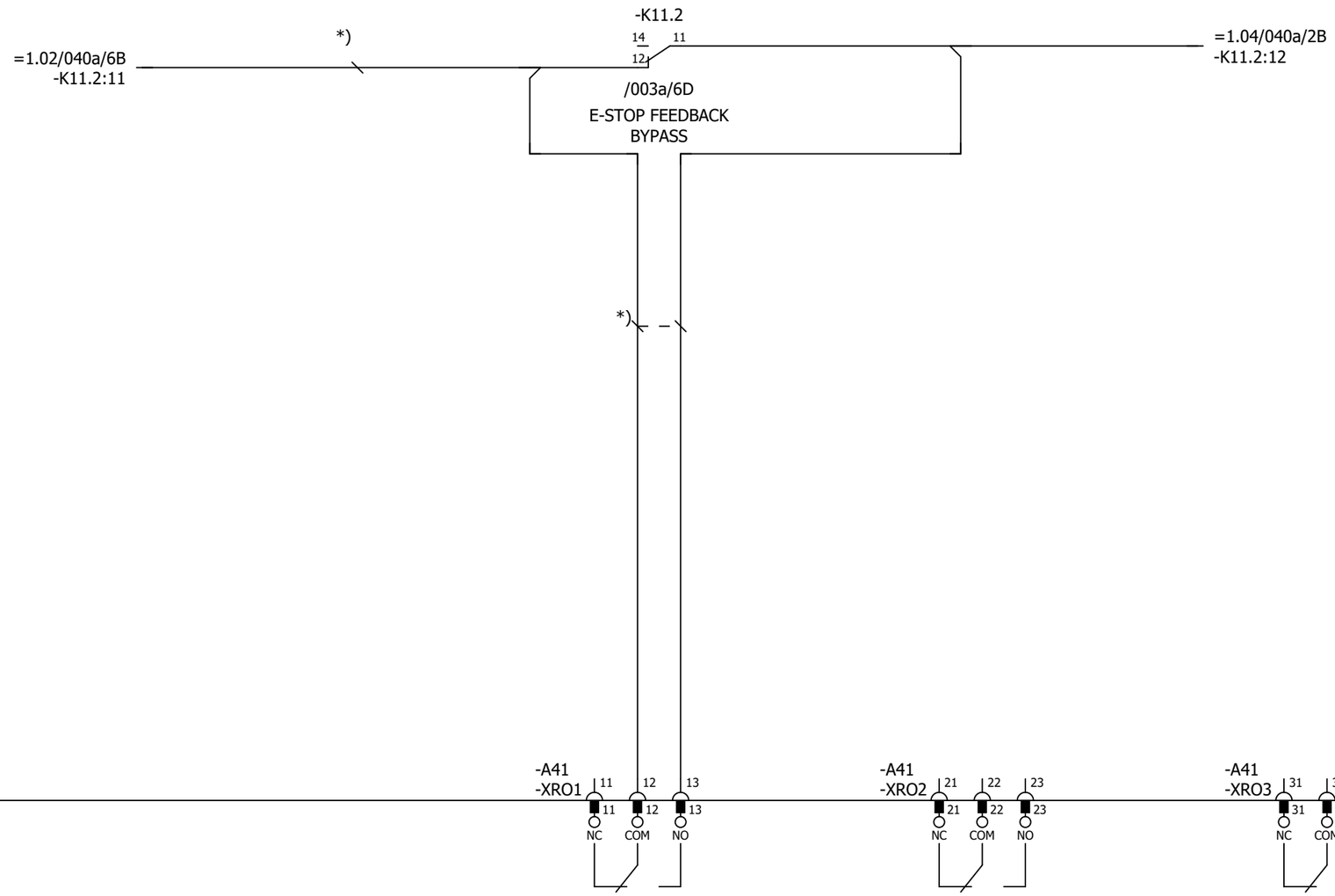

P345812 / 29711

Cust. Doc. No.	Prep. Sky-Xin Zhang 02.08.2023	Title CONTROL BOARD INV1.03 ACS880-107-0078A-3 400V	Circuit diagram EFS2
Cust. Ref. No.	App.		SAP Doc. No.
Customer WMMP	Project Zhaka Jack-up Lift System Zhaka Jack-up Lift System-1		EPLAN Doc. No. 3ABDC230674 - 1.03
			ABB Ref. No.
			Resp. Dept.

Item Des.
= 1.03
+ 1.01.1

Rev. .1 Sheet 040a
Cont. 040b

Control and status signals	Terminal	Pin
DIGITAL INTERLOCK	-XD24	1
START/STOP 1 - START	-XDI	1
FORWARD/REVERSE 1 - REVERSE	-XDI	2
RESET	-XDI	3
EMERGENCY STOP 0 - ACTIVE	-XDI	4
NOT SPECIFIED	-XDI	5
DI6 NOT IN USE	-XDI	6
OUTPUT: READY	-XDIO	1
OUTPUT: RUNNING	-XDIO	2

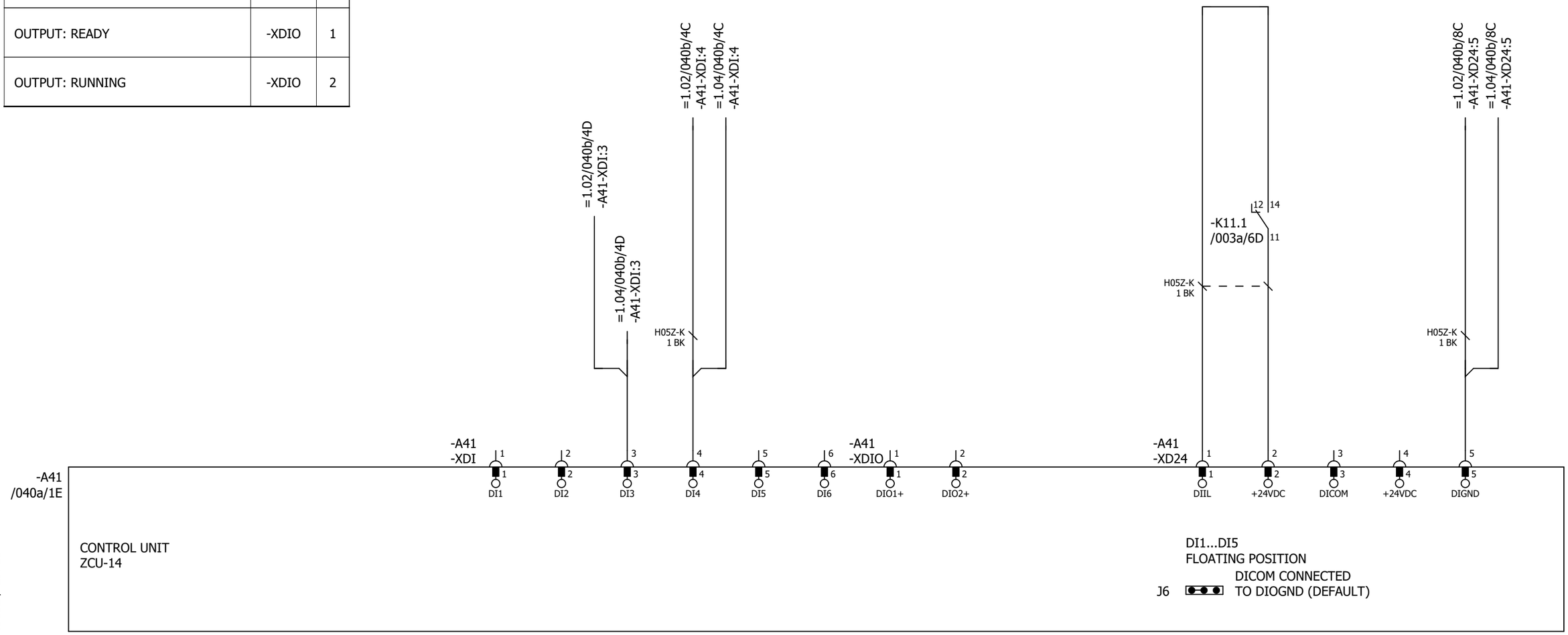

Cust. Doc. No.	Prep. Sky-Xin Zhang 02.08.2023	Title CONTROL BOARD INV1.03 ACS880-107-0078A-3 400V	Circuit diagram EFS2	Item Des.	
Cust. Ref. No.	App.		SAP Doc. No.	= 1.03 + 1.01.1	
Customer WMMP	Project Zhaka Jack-up Lift System Zhaka Jack-up Lift System-1	ABB	EPLAN Doc. No. 3ABDC230674 - 1.03		
			ABB Ref. No.	Rev. .1	Sheet 040b
			Resp. Dept.	Cont.	040c

Control and status signals	Terminal	Pin
MOTOR TEMP. MONITORING 0(2)…10V	-XAI	4
AI2 NOT SPECIFIED BY DEFAULT NOT IN USE 0(4)…20mA	-XAI	6
CURR SOU MOT TEMP MONIT 0(4)...20mA	-XAO	1
CURRENT 0(4)…20mA ↔ 0(4)…MOTOR CURRENT	-XAO	3

P345812 / 29711

Cust. Doc. No.	Prep. Sky-Xin Zhang 02.08.2023	Title CONTROL BOARD INV1.03 ACS880-107-0078A-3 400V	Circuit diagram EFS2
Cust. Ref. No.	App.		SAP Doc. No.
Customer WMMP	Project Zhaka Jack-up Lift System Zhaka Jack-up Lift System-1		EPLAN Doc. No. 3ABDC230674 - 1.03
			ABB Ref. No.
			Resp. Dept.

Item Des.
= 1.03
+ 1.01.1

Rev. .1 Sheet 040c
Cont. 040d

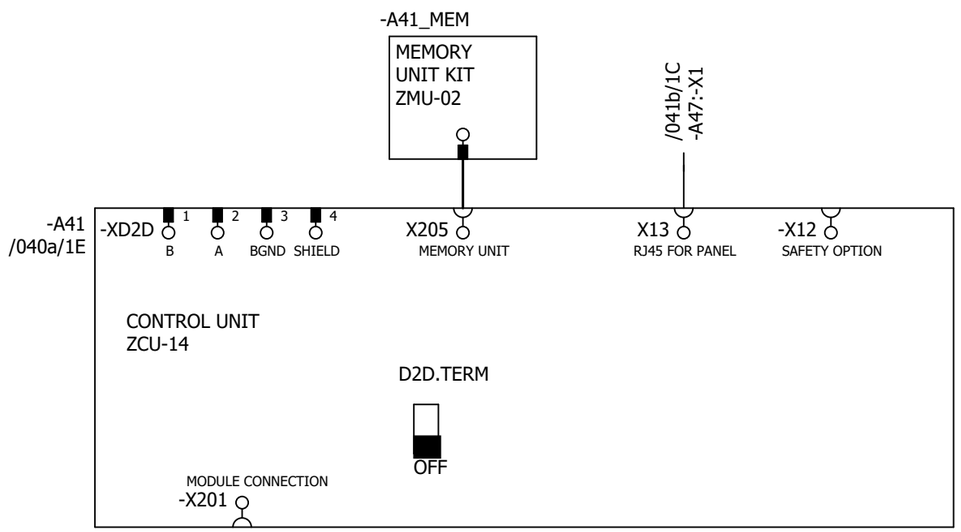

P345812 / 29711

Cust. Doc. No.	Prep. Sky-Xin Zhang 02.08.2023	Title CONTROL BOARD	Circuit diagram EFS2	Item Des.	
Cust. Ref. No.	App.	INV1.03	SAP Doc. No.	= 1.03	
Customer WMMP	Project Zhaka Jack-up Lift System	ACS880-107-0078A-3	EPLAN Doc. No. 3ABDC230674 - 1.03	+ 1.01.1	
	Zhaka Jack-up Lift System-1	400V	ABB Ref. No.	Rev. .1	Sheet 040d
			Resp. Dept.	Cont.	041a

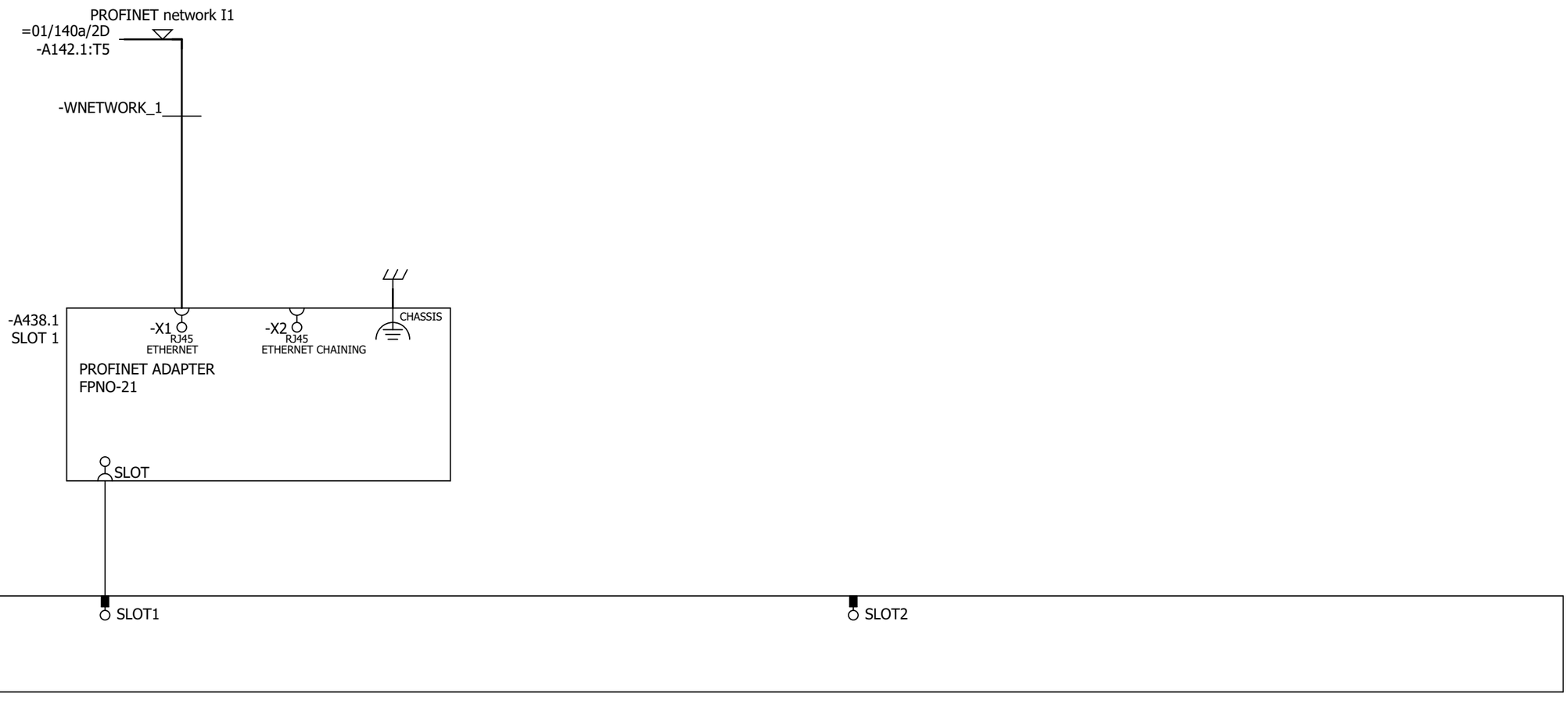

Cust. Doc. No.	Prep. Sky-Xin Zhang 02.08.2023	Title OPTION CARDS INV1.03 ACS880-107-0078A-3 400V	Circuit diagram EFS2
Cust. Ref. No.	App.		SAP Doc. No.
Customer WMMP	Project Zhaka Jack-up Lift System Zhaka Jack-up Lift System-1		EPLAN Doc. No. 3ABDC230674 - 1.03
			ABB Ref. No.
			Resp. Dept.

Item Des.
= 1.03
+ 1.01.1

Rev. .1 Sheet 041a
Cont. 041b

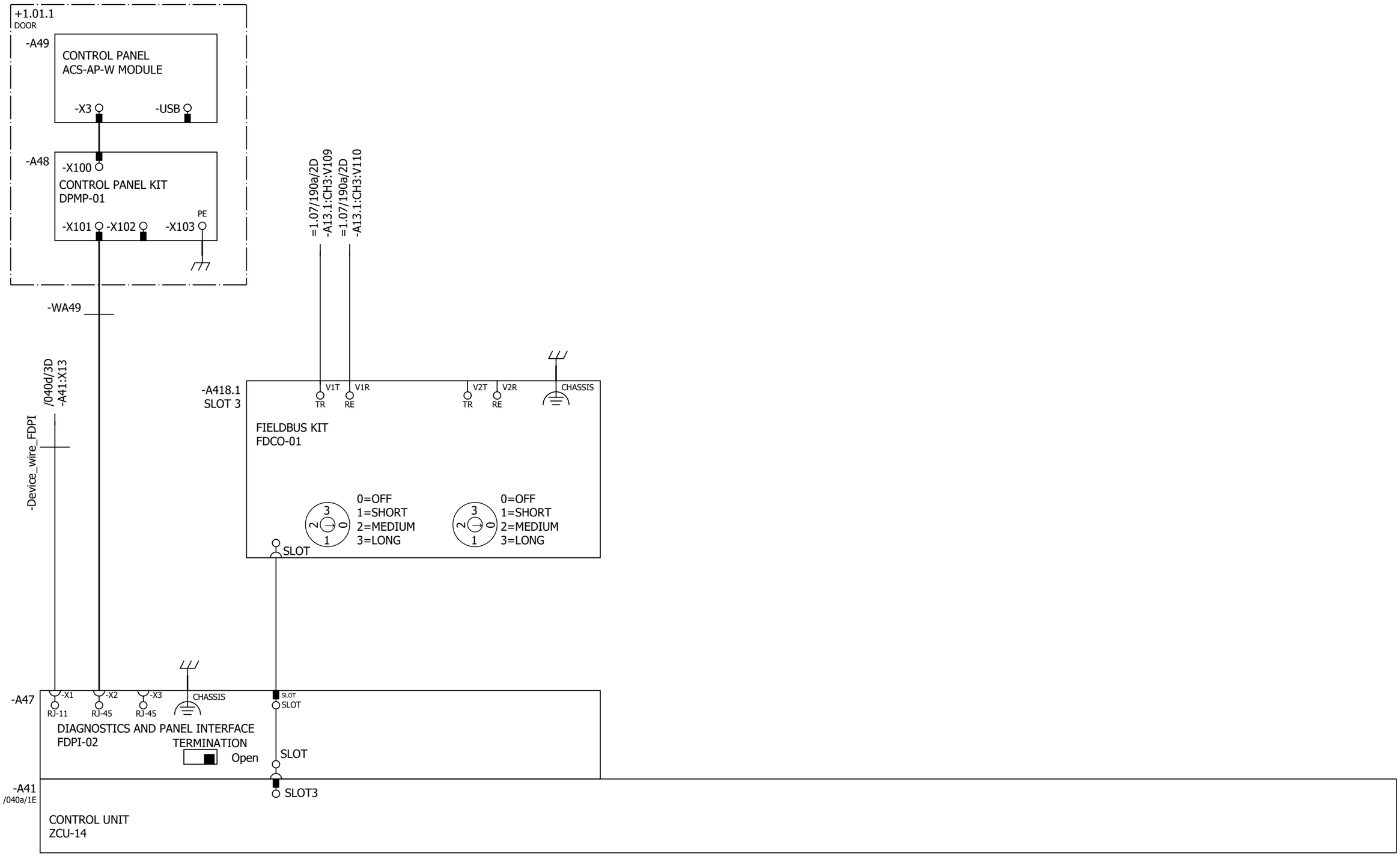

Cust. Doc. No.	Prep. Sky-Xin Zhang 02.08.2023	Title OPTION CARDS	Circuit diagram EFS2	Item Des.
Cust. Ref. No.	App.	INV1.03	SAP Doc. No.	= 1.03
Customer WMMP	Project Zhaka Jack-up Lift System	ACS880-107-0078A-3	EPLAN Doc. No. 3ABDC230674 - 1.03	+ 1.01.1
	Zhaka Jack-up Lift System-1	400V	ABB Ref. No.	Rev. .1 Sheet 041b
			Resp. Dept.	Cont. 061a

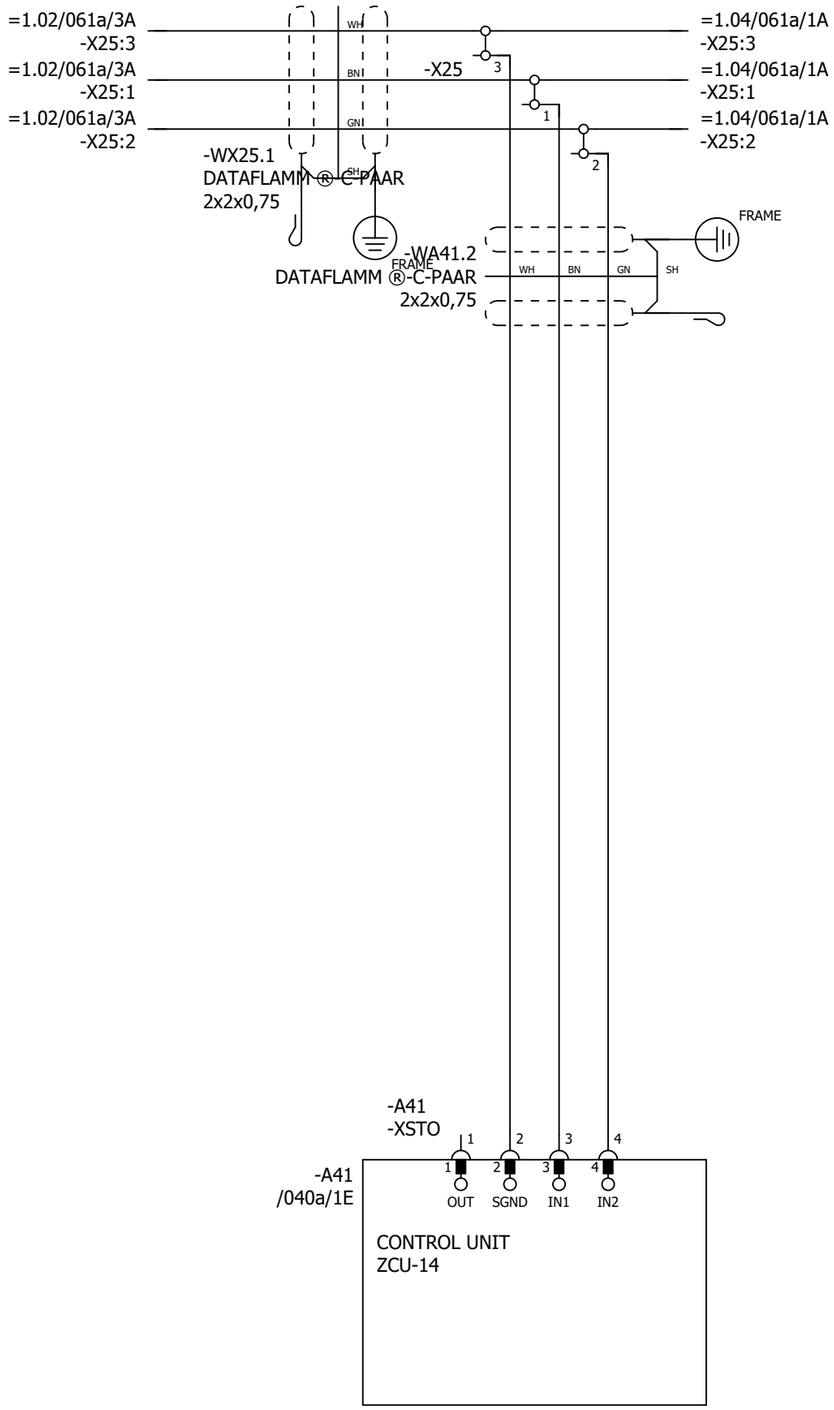

P345812 / 29711

SAFETY CIRCUIT
MACRO REVISION 6
RULES CONVERTED 19.7.2023

Cust. Doc. No.	Prep. Sky-Xin Zhang 02.08.2023	Title SAFETY CIRCUIT	Circuit diagram EFS2	Item Des.	
Cust. Ref. No.	App.	INV1.03	SAP Doc. No.	= 1.03	
Customer WMMP	Project Zhaka Jack-up Lift System	ACS880-107-0078A-3	EPLAN Doc. No. 3ABDC230674 - 1.03	+ 1.01.1	
	Zhaka Jack-up Lift System-1	400V	ABB Ref. No.	Rev. .1	Sheet 061a
			Resp. Dept.	Cont.	&MPC/Part list_1

Part list: 3ABDC230674DU01003

Item	Sort String	Qty.Str	Unit	Component Number	Description and text	Technical data
0010		1.000	ST		ACS880-107-0078A-3+A012+B053+C121+C132+	
0020		1.000	ST		_C206+E210+F272+F287+F288+G300+G307+G315	
0030		1.000	ST		_+G320+G330+G344+H352+H367+J400+K492+L50	
0040		1.000	ST		_3+P913+Q964	
0050		1.000	ST		=1.03	
0060		1.000	ST		+1.01.1,INU3	
0070		1.000	ST		Powerconversionequipment	
0080	-A41_MEM	1.000	PC	3AXD50000006010	MEMORY UNIT KIT ZMU-02	
0090	-T11	1.000	PC	3AUA0000120009-M	ACS880-104-0078A-3+P922	+P922
0100	SCREW	1.000	PC	3AFE68681481	SCREW K30X10 TORX	PT WN1452 ZN
0110	SOFTWARE	1.000	PC	3AUA0000153462	SOFTWARE PRIMARY CONTROL PROGRA	AINF6 FOR ZCU-12/14
0120		1.000	ST		R4imoduleDCfuse	
0130	-F11.1-2	2.000	PC	3AXD50000000219	FUSE FR27UQ69V160T/160A	6.921 CP URQ 27X60MM FERRULE;AR
0140		1.000	ST		R3i-R4imoduleDCfusebase	
0150	(-F11.1-2)	2.000	PC	3AUA0000089227	FUSE HOLDER FUSE BASE US271MI 150A	FUSE BASE US271MI 150A 800V
0160		1.000	ST		motorterminalR4i,coppercable	
0170	-X1	1.000	PC	3ABD50000000270	CONNECTOR PPAC-50	50 MM2;150 A;800V
0180	-X1	1.000	PC	3ABD50000000270	CONNECTOR PPAC-50	50 MM2;150 A;800V
0190	-X1	1.000	PC	3ABD50000000270	CONNECTOR PPAC-50	50 MM2;150 A;800V
0200		1.000	ST		24VDCsupplyZCU	
0210	-WA41_1	1.000	PC	3AXD50000005218	WIRE HARNESS 24VDC SUPPLY X51 ZCU V	HALOGEN FREE;X51_A51
0220		1.000	ST		Rooffancontrol	
0230	-WA41_3	1.000	PC	3AXD50000002688	WIRE HARNESS FAN CONTROL MAIN WIRE	HALOGEN FREE;X208_X26.3
0240		1.000	ST		Toprowmodulewireharness	
0250	-WT11	1.000	PC	3AXD50000002256	WIRE HARNESS R4I FUSE_MODULE V2	HALOGEN FREE;MAIN CIRCUIT WIRE SET
0260	-WX1	1.000	PC	3AXD50000002258	WIRE HARNESS R4I MODULE_OUTPUT TR V	HALOGEN FREE;MAIN CIRCUIT WIRE SET
0270		1.000	ST		Optionmodule	
0280	-A418.1	1.000	PC	3AUA0000107392	COMMUNIC. ADAPTER FDCO-01	
0290		1.000	ST		Controlpanel	
0300	-A47	1.000	PC	3AUA0000108650	FIELDBUS KIT FDPI-02	PANEL BUS ADAPTER
0310	-A48	1.000	PC	3AUA0000108878	CONTROL PANEL KIT DPMP-01	DPMP-01
0320	-A49	1.000	PC	3AXD50000025964	CONTROL PANEL ACS-AP-W MODULE	ASSISTANT PANEL WIRELESS CPU1
0330		1.000	ST		DCfusesupervision	

P345812 / 29711

Cust. Doc. No.	Prep.	Title PART LIST INV1.03 ACS880-107-0078A-3 400V	Item Des. = 1.03 +
Cust. Ref. No.	App.		SAP Doc. No.
Customer WMMP	Project Zhaka Jack-up Lift System Zhaka Jack-up Lift System-1		EPLAN Doc. No. 3ABDC230674 - 1.03
			ABB Ref. No. / Rev. / Sheet Part list_1
			Resp. Dept. / Cont. Part list_2

Part list: 3ABDC230674DU01003

Item	Sort String	Qty.Str	Unit	Component Number	Description and text	Technical data
0340	-K11.1-2	2.000	PC	3AXD50000021313	RELAY DEK_REL_G24/21	250 V;6 A;COIL 24VDC
0350		1.000	ST		FieldBus	
0360	-A438.1	1.000	PC	3AXD50000192779	OPTION MODULE FPNO-21	PROFINET IO
0370		1.000	ST		Supplementtorelay	
0380	(-K11.1)	1.000	PC	3AXD50000021312	TERMINAL BLOCK ST EB2_DIK_RD 2716693	2POLE, 6,15 MM PITCH;FOR DEK RELAYS

P345812 / 29711

Cust. Doc. No.	Prep.	Title PART LIST INV1.03 ACS880-107-0078A-3 400V	Item Des. = 1.03 +
Cust. Ref. No.	App.		SAP Doc. No.
Customer WMMP	Project Zhaka Jack-up Lift System Zhaka Jack-up Lift System-1		EPLAN Doc. No. 3ABDC230674 - 1.03
			ABB Ref. No. / Rev. / Sheet Part list_2
			Resp. Dept. / Cont. &EMA/1

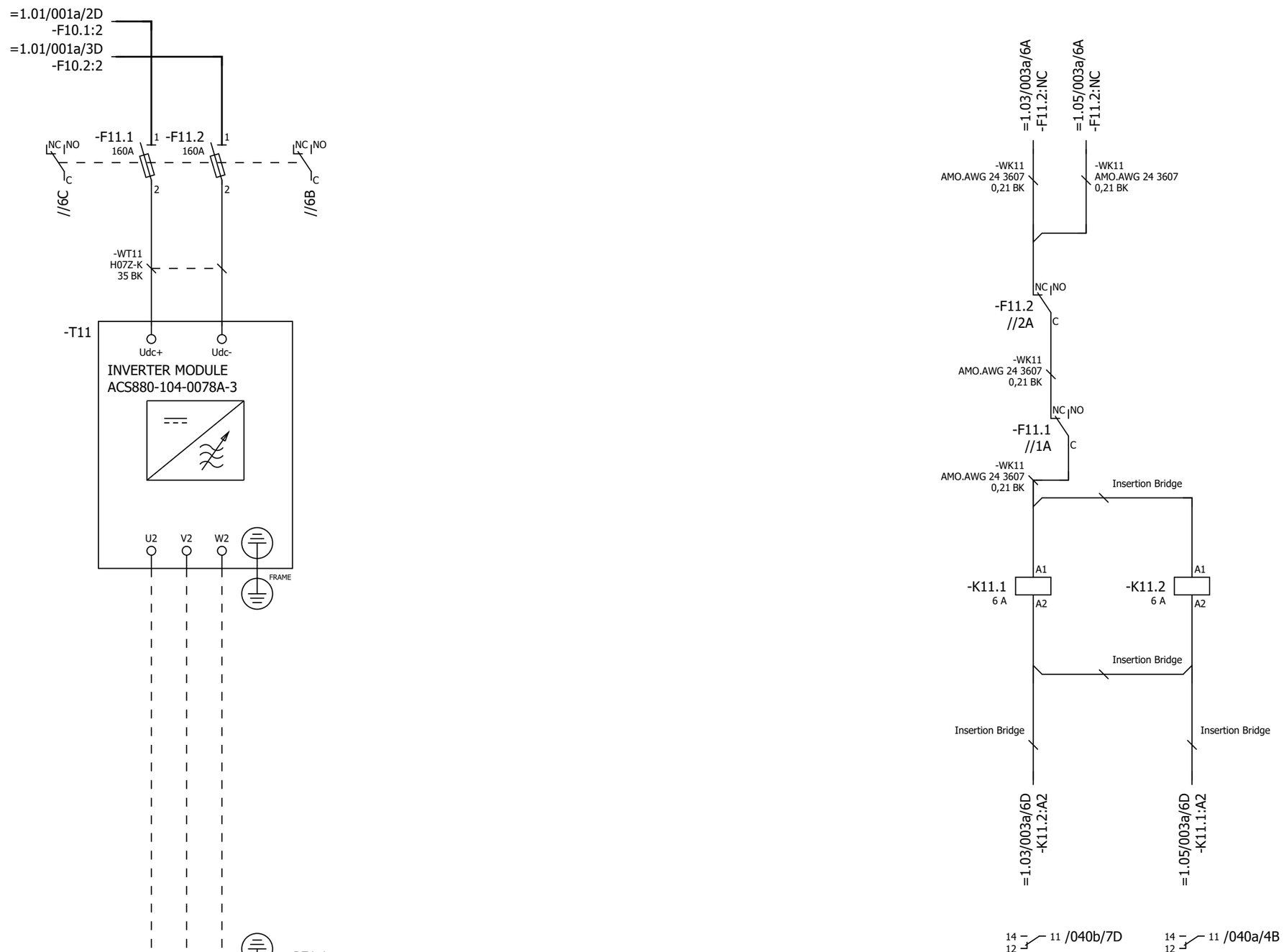

P345812 / 29711

Cust. Doc. No.	Prep. Sky-Xin Zhang 02.08.2023	Title MAIN CIRCUIT	Circuit diagram EFS2
Cust. Ref. No.	App.	INV1.04	SAP Doc. No.
Customer WMMP	Project Zhaka Jack-up Lift System	ACS880-107-0078A-3	EPLAN Doc. No. 3ABDC230674 - 1.04
	Zhaka Jack-up Lift System-1	400V	ABB Ref. No.
			Resp. Dept.

Item Des.
= 1.04
+ 1.01.1

Rev. .1 Sheet 003a
Cont. 040a

Control and status signals	Terminal	Pin
E-STOP FEEDBACK 1 - ESTOP ACTIVE	-XRO1	12
RUNNING 1 - RUNNING	-XRO2	22
FAULT (-1) 1 - NO FAULT	-XRO3	32

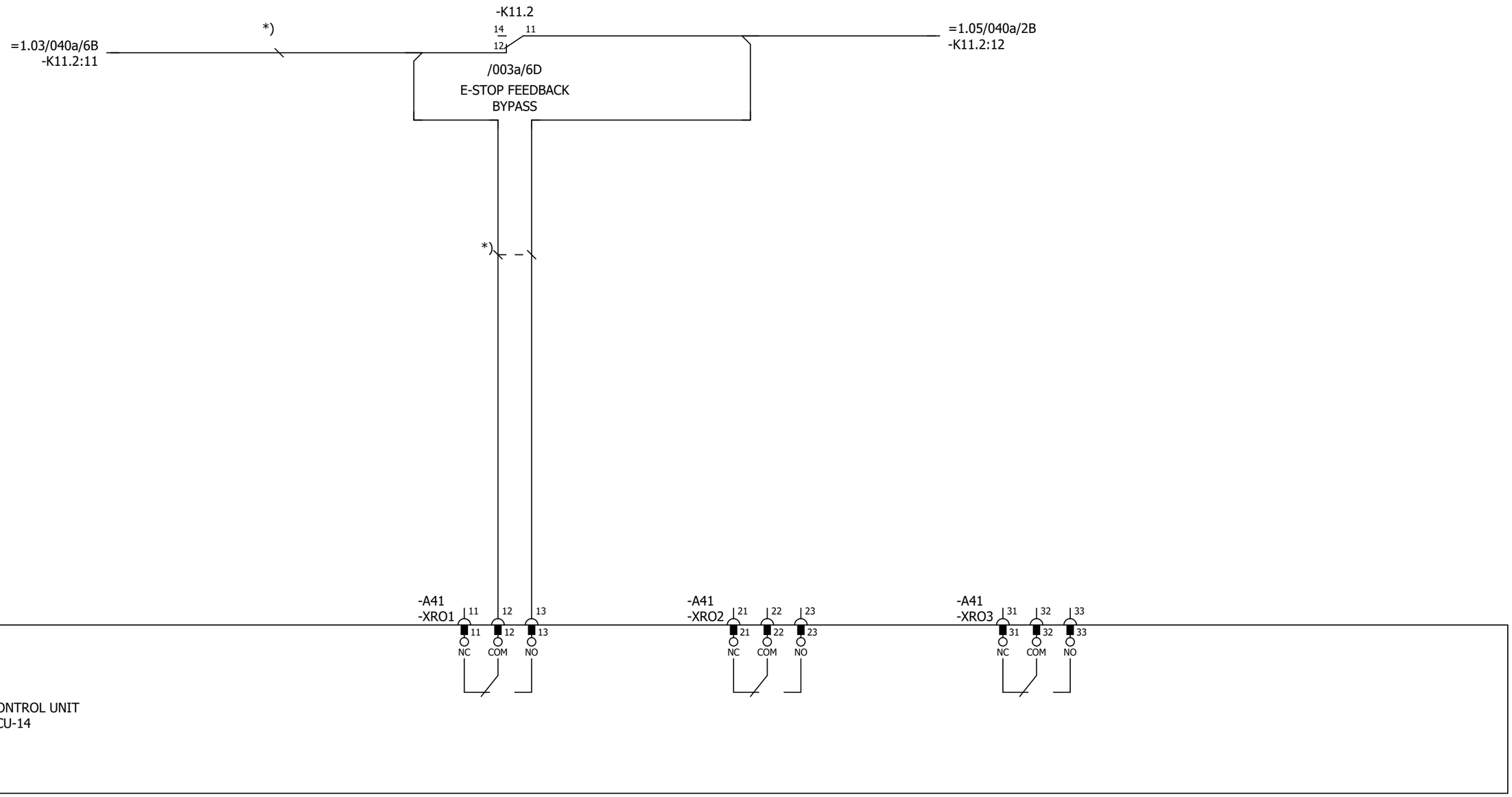

Cust. Doc. No.	Prep. Sky-Xin Zhang 02.08.2023	Title CONTROL BOARD INV1.04 ACS880-107-0078A-3 400V	Circuit diagram EFS2
Cust. Ref. No.	App.		SAP Doc. No.
Customer WMMP	Project Zhaka Jack-up Lift System Zhaka Jack-up Lift System-1		EPLAN Doc. No. 3ABDC230674 - 1.04
			ABB Ref. No.
			Resp. Dept.

Item Des.
= 1.04
+ 1.01.1

Rev. .1 Sheet 040a
Cont. 040b

Control and status signals	Terminal	Pin
DIGITAL INTERLOCK	-XD24	1
START/STOP 1 - START	-XDI	1
FORWARD/REVERSE 1 - REVERSE	-XDI	2
RESET	-XDI	3
EMERGENCY STOP 0 - ACTIVE	-XDI	4
NOT SPECIFIED	-XDI	5
DI6 NOT IN USE	-XDI	6
OUTPUT: READY	-XDIO	1
OUTPUT: RUNNING	-XDIO	2

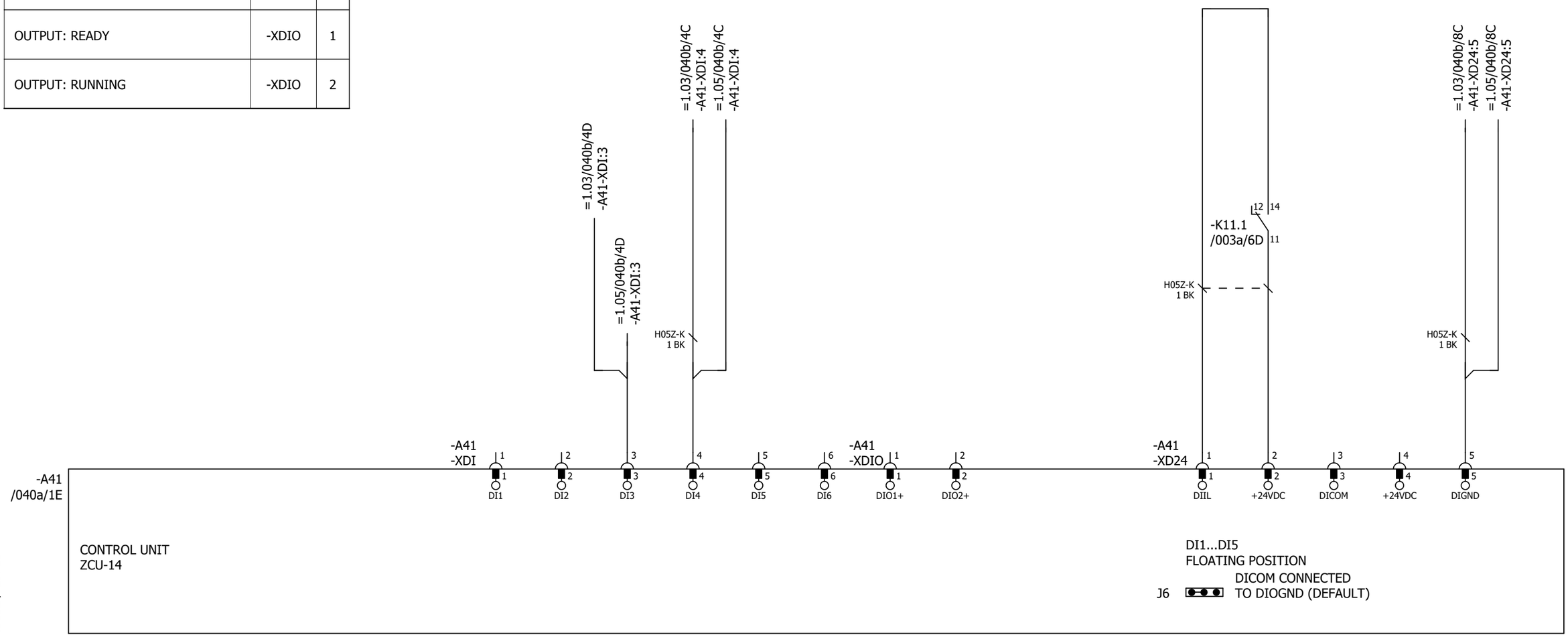

P345812 / 29711

Cust. Doc. No.	Prep. Sky-Xin Zhang 02.08.2023	Title CONTROL BOARD INV1.04 ACS880-107-0078A-3 400V	Circuit diagram EFS2
Cust. Ref. No.	App.		SAP Doc. No.
Customer WMMP	Project Zhaka Jack-up Lift System Zhaka Jack-up Lift System-1		EPLAN Doc. No. 3ABDC230674 - 1.04
			ABB Ref. No.
			Resp. Dept.

Item Des.
= 1.04
+ 1.01.1

Rev. .1 Sheet 040b
Cont. 040c

Control and status signals	Terminal	Pin
MOTOR TEMP. MONITORING 0(2)…10V	-XAI	4
AI2 NOT SPECIFIED BY DEFAULT NOT IN USE 0(4)…20mA	-XAI	6
CURR SOU MOT TEMP MONIT 0(4)...20mA	-XAO	1
CURRENT 0(4)…20mA ↔ 0(4)…MOTOR CURRENT	-XAO	3

P345812 / 29711

Cust. Doc. No.	Prep. Sky-Xin Zhang 02.08.2023	Title CONTROL BOARD INV1.04 ACS880-107-0078A-3 400V	Circuit diagram EFS2
Cust. Ref. No.	App.		SAP Doc. No.
Customer WMMP	Project Zhaka Jack-up Lift System Zhaka Jack-up Lift System-1		EPLAN Doc. No. 3ABDC230674 - 1.04
			ABB Ref. No.
			Resp. Dept.

Item Des.
= 1.04
+ 1.01.1

Rev. .1 Sheet 040c
Cont. 040d

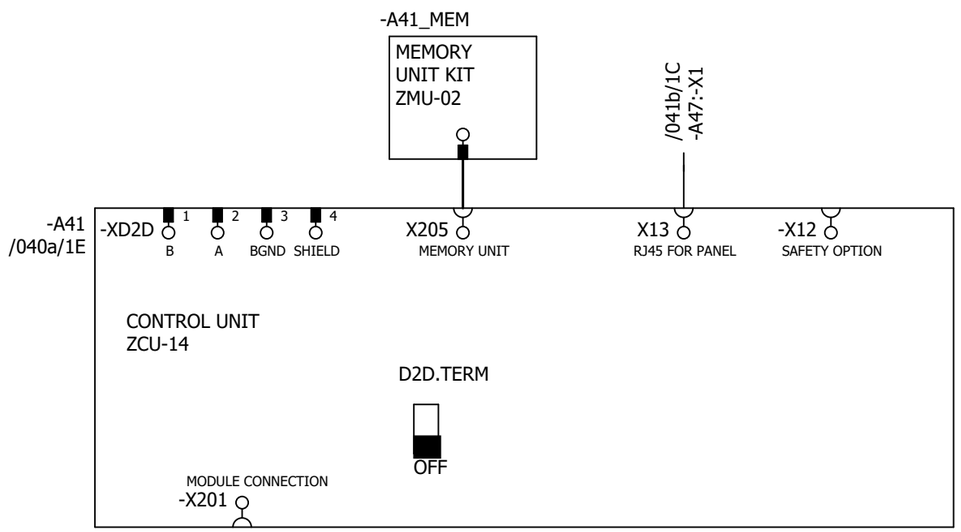

P345812 / 29711

Cust. Doc. No.	Prep. Sky-Xin Zhang 02.08.2023	Title CONTROL BOARD INV1.04 ACS880-107-0078A-3 400V	Circuit diagram EFS2
Cust. Ref. No.	App.		SAP Doc. No.
Customer WMMP	Project Zhaka Jack-up Lift System Zhaka Jack-up Lift System-1		EPLAN Doc. No. 3ABDC230674 - 1.04
			ABB Ref. No.
			Resp. Dept.

Item Des.	= 1.04 + 1.01.1
Rev. .1	Sheet 040d
Cont.	041a

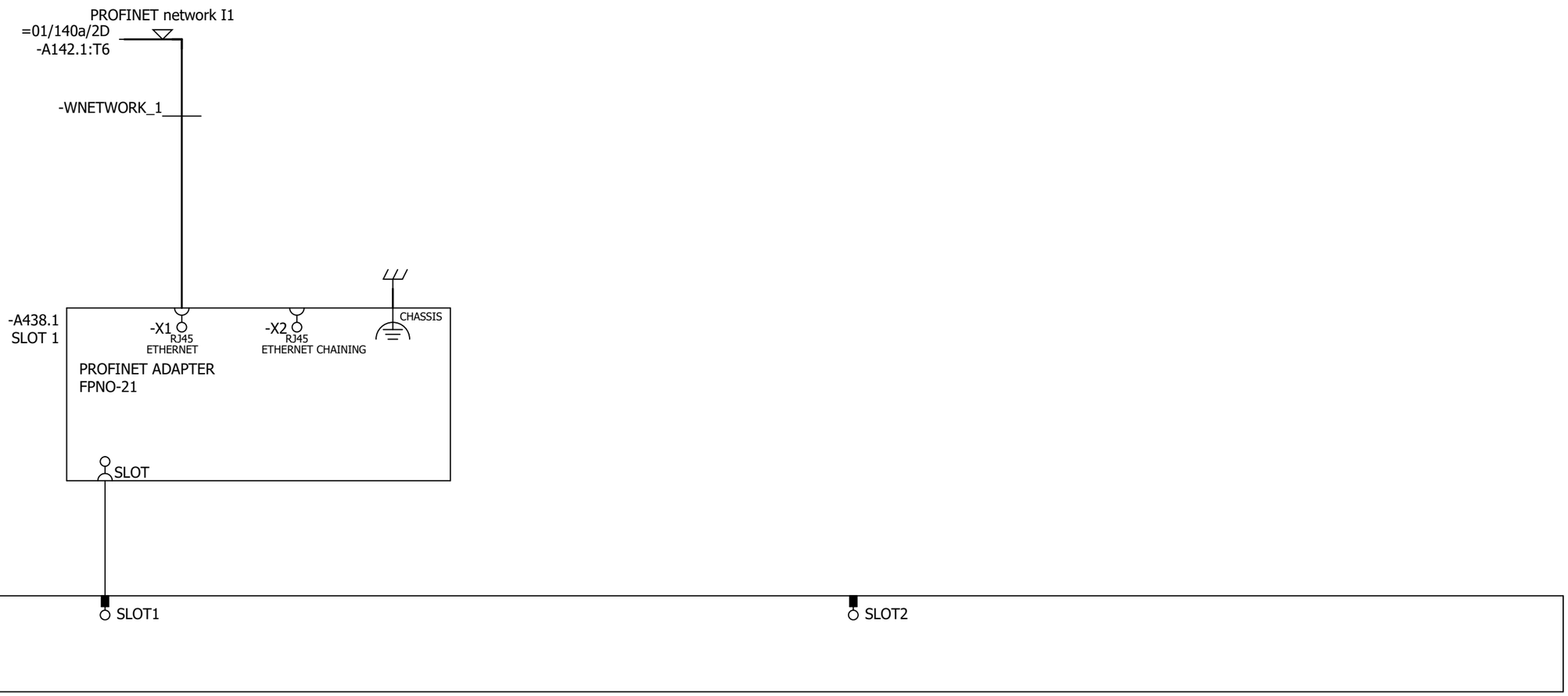

Cust. Doc. No.	Prep. Sky-Xin Zhang 02.08.2023	Title OPTION CARDS INV1.04 ACS880-107-0078A-3 400V	Circuit diagram EFS2
Cust. Ref. No.	App.		SAP Doc. No.
Customer WMMP	Project Zhaka Jack-up Lift System Zhaka Jack-up Lift System-1		EPLAN Doc. No. 3ABDC230674 - 1.04
			ABB Ref. No.
			Resp. Dept.

Item Des.
= 1.04
+ 1.01.1

Rev. .1 Sheet 041a
Cont. 041b

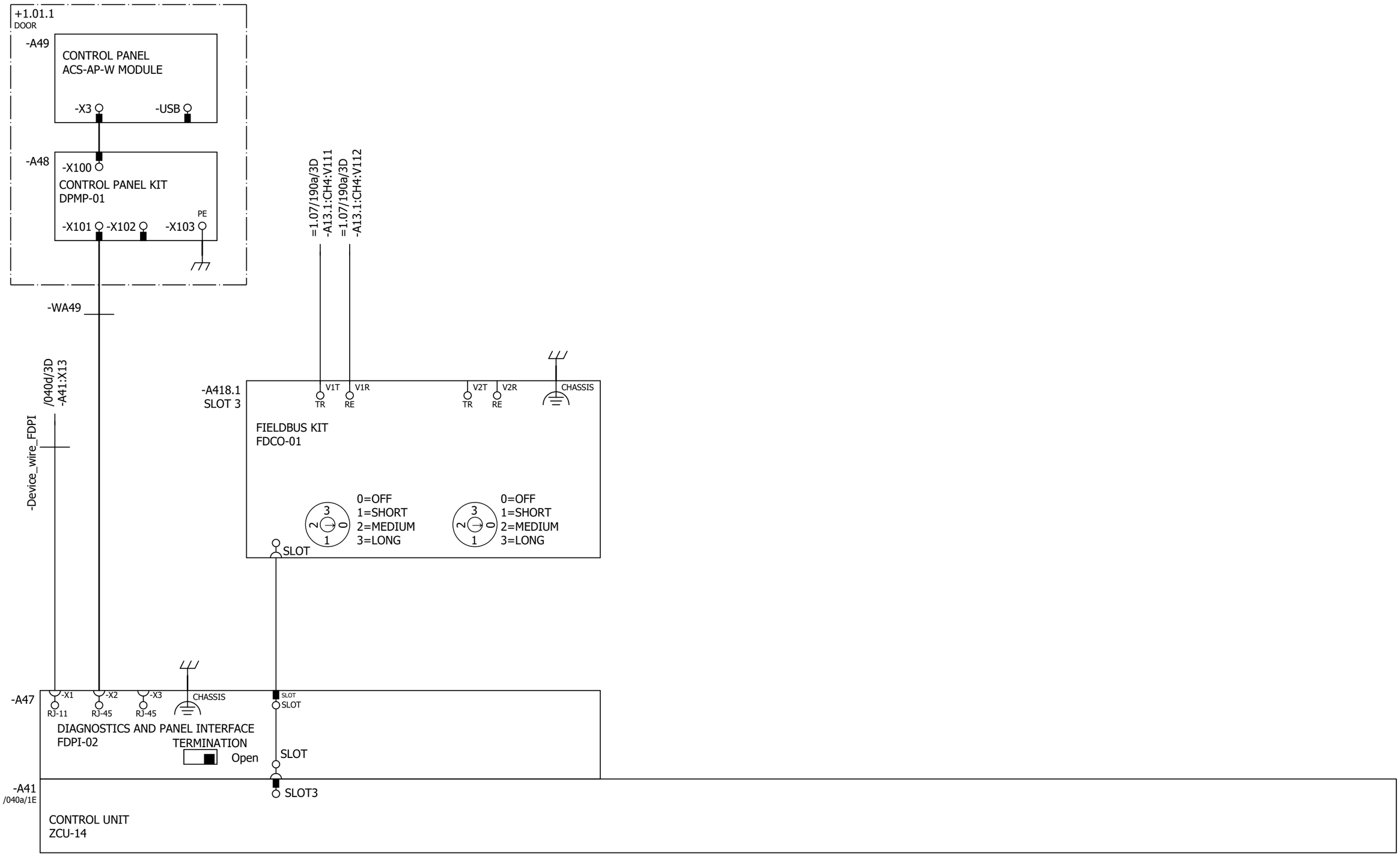

Cust. Doc. No.	Prep. Sky-Xin Zhang 02.08.2023	Title OPTION CARDS	Circuit diagram EFS2	Item Des.
Cust. Ref. No.	App.	INV1.04	SAP Doc. No.	= 1.04
Customer WMMP	Project Zhaka Jack-up Lift System	ACS880-107-0078A-3	EPLAN Doc. No. 3ABDC230674 - 1.04	+ 1.01.1
	Zhaka Jack-up Lift System-1	400V	ABB Ref. No.	Rev. .1 Sheet 041b
			Resp. Dept.	Cont. 061a

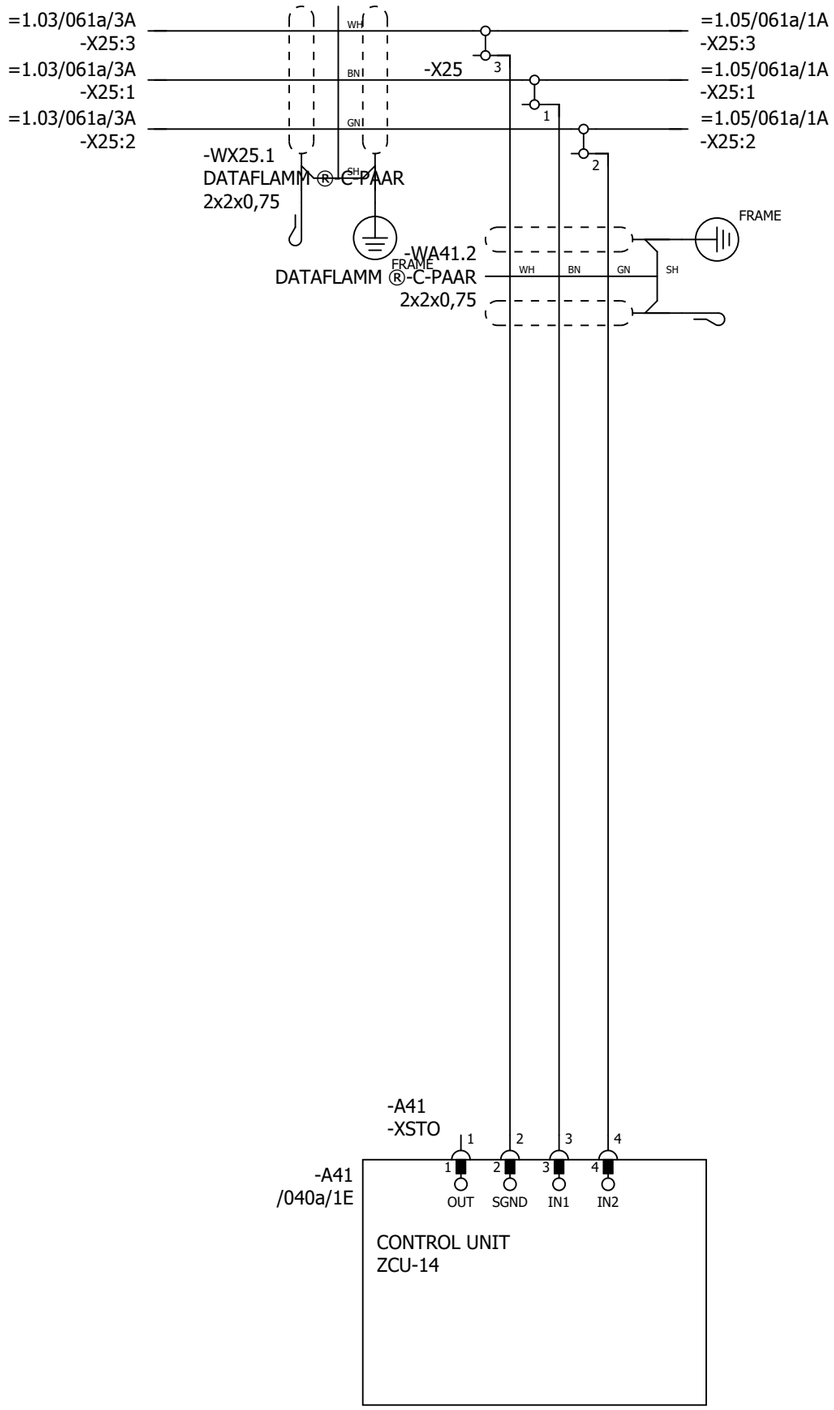

P345812 / 29711

SAFETY CIRCUIT
MACRO REVISION 6
RULES CONVERTED 19.7.2023

Cust. Doc. No.	Prep. Sky-Xin Zhang 02.08.2023	Title SAFETY CIRCUIT INV1.04 ACS880-107-0078A-3 400V	Circuit diagram EFS2
Cust. Ref. No.	App.		SAP Doc. No.
Customer WMMP	Project Zhaka Jack-up Lift System Zhaka Jack-up Lift System-1		EPLAN Doc. No. 3ABDC230674 - 1.04
			ABB Ref. No.
			Resp. Dept.

Item Des.	= 1.04 + 1.01.1
Rev. .1	Sheet 061a
Cont.	&MPC/Part list_1

Part list: 3ABDC230674DU01004

Item	Sort String	Qty.Str	Unit	Component Number	Description and text	Technical data
0010		1.000	ST		ACS880-107-0078A-3+A012+B053+C121+C132+	
0020		1.000	ST		_C206+E210+F272+F287+F288+G300+G307+G315	
0030		1.000	ST		_+G320+G330+G344+H352+H367+J400+K492+L50	
0040		1.000	ST		_3+P913+Q964	
0050		1.000	ST		=1.04	
0060		1.000	ST		+1.01.1,INU3	
0070		1.000	ST		Powerconversionequipment	
0080	-A41_MEM	1.000	PC	3AXD50000006010	MEMORY UNIT KIT ZMU-02	
0090	-T11	1.000	PC	3AUA0000120009-M	ACS880-104-0078A-3+P922	+P922
0100	SCREW	1.000	PC	3AFE68681481	SCREW K30X10 TORX	PT WN1452 ZN
0110	SOFTWARE	1.000	PC	3AUA0000153462	SOFTWARE PRIMARY CONTROL PROGRA	AINF6 FOR ZCU-12/14
0120		1.000	ST		R4imoduleDCfuse	
0130	-F11.1-2	2.000	PC	3AXD50000000219	FUSE FR27UQ69V160T/160A	6.921 CP URQ 27X60MM FERRULE;AR
0140		1.000	ST		R3i-R4imoduleDCfusebase	
0150	(-F11.1-2)	2.000	PC	3AUA0000089227	FUSE HOLDER FUSE BASE US271MI 150A	FUSE BASE US271MI 150A 800V
0160		1.000	ST		24VDCsupplyZCU	
0170	-WA41_1	1.000	PC	3AXD50000005218	WIRE HARNESS 24VDC SUPPLY X51 ZCU V	HALOGEN FREE;X51_A51
0180		1.000	ST		Rooffancontrol	
0190	-WA41_3	1.000	PC	3AXD50000002688	WIRE HARNESS FAN CONTROL MAIN WIRE	HALOGEN FREE;X208_X26.3
0200		1.000	ST		Bottomrowmodulewireharness	
0210	-WT11	1.000	PC	3AXD50000002418	WIRE HARNESS R4I FUSE_MODULE BR V2	HALOGEN FREE;MAIN CIRCUIT WIRE SET
0220		1.000	ST		Optionmodule	
0230	-A418.1	1.000	PC	3AUA0000107392	COMMUNIC. ADAPTER FDCO-01	
0240		1.000	ST		Controlpanel	
0250	-A47	1.000	PC	3AUA0000108650	FIELDBUS KIT FDPI-02	PANEL BUS ADAPTER
0260	-A48	1.000	PC	3AUA0000108878	CONTROL PANEL KIT DPMP-01	DPMP-01
0270	-A49	1.000	PC	3AXD50000025964	CONTROL PANEL ACS-AP-W MODULE	ASSISTANT PANEL WIRELESS CPU1
0280		1.000	ST		DCfusesupervision	
0290	-K11.1-2	2.000	PC	3AXD50000021313	RELAY DEK_REL_G24/21	250 V;6 A;COIL 24VDC
0300		1.000	ST		FieldBus	
0310	-A438.1	1.000	PC	3AXD50000192779	OPTION MODULE FPNO-21	PROFINET IO
0320		1.000	ST		Supplementtorelay	
0330	(-K11.1)	1.000	PC	3AXD50000021312	TERMINAL BLOCK ST EB2_DIK_RD 2716693	2POLE, 6,15 MM PITCH;FOR DEK RELAYS

P345812 / 29711

Cust. Doc. No.	Prep.	Title PART LIST INV1.04 ACS880-107-0078A-3 400V	Item Des. = 1.04 +
Cust. Ref. No.	App.		SAP Doc. No.
Customer WMMP	Project Zhaka Jack-up Lift System Zhaka Jack-up Lift System-1		EPLAN Doc. No. 3ABDC230674 - 1.04
			ABB Ref. No. / Rev. / Sheet Part list_1
			Resp. Dept. / Cont. &EMA/1

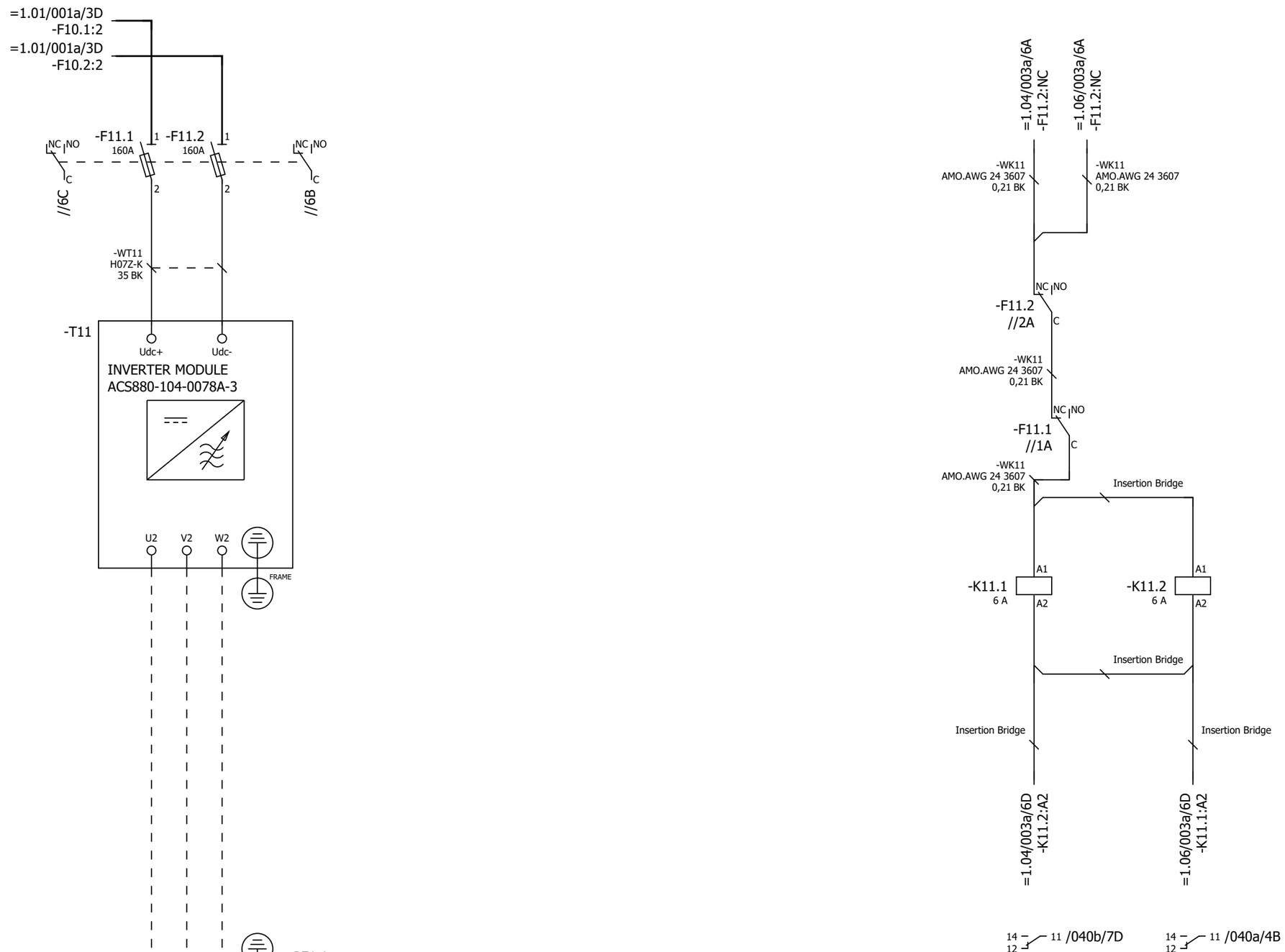

P345812 / 29711

Cust. Doc. No.	Prep. Sky-Xin Zhang 02.08.2023	Title MAIN CIRCUIT	Circuit diagram EFS2
Cust. Ref. No.	App.	INV1.05	SAP Doc. No.
Customer WMMP	Project Zhaka Jack-up Lift System	ACS880-107-0078A-3	EPLAN Doc. No. 3ABDC230674 - 1.05
	Zhaka Jack-up Lift System-1	400V	ABB Ref. No.
			Resp. Dept.

Item Des.
= 1.05
+ 1.01.1

Rev. .1 Sheet 003a
Cont. 040a

Control and status signals	Terminal	Pin
E-STOP FEEDBACK 1 - ESTOP ACTIVE	-XRO1	12
RUNNING 1 - RUNNING	-XRO2	22
FAULT (-1) 1 - NO FAULT	-XRO3	32

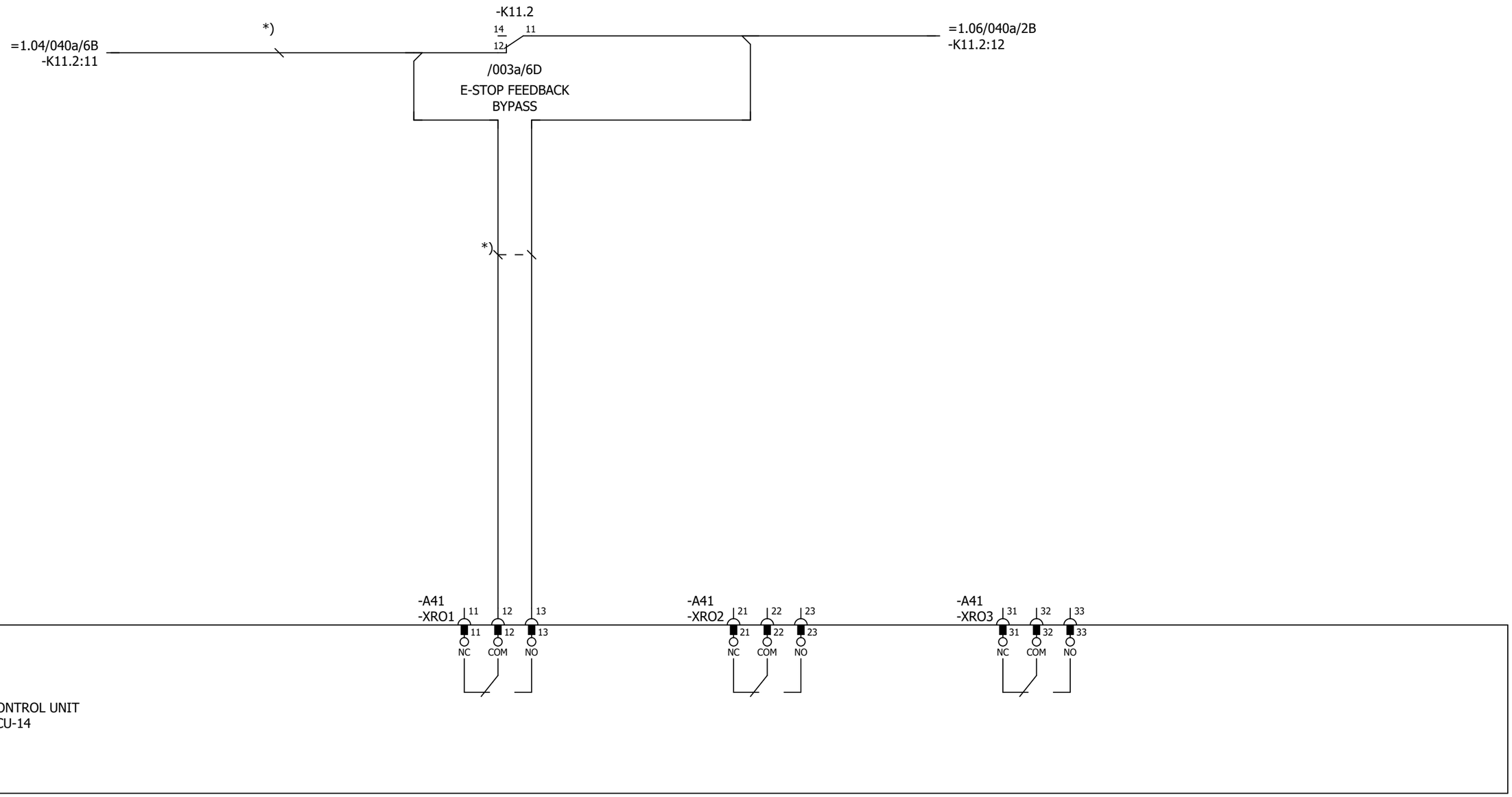

Cust. Doc. No.	Prep. Sky-Xin Zhang 02.08.2023	Title CONTROL BOARD INV1.05 ACS880-107-0078A-3 400V	Circuit diagram EFS2
Cust. Ref. No.	App.		SAP Doc. No.
Customer WMMP	Project Zhaka Jack-up Lift System Zhaka Jack-up Lift System-1		EPLAN Doc. No. 3ABDC230674 - 1.05
			ABB Ref. No.
			Resp. Dept.

Item Des.
= 1.05
+ 1.01.1

Rev. .1 Sheet 040a
Cont. 040b

Control and status signals	Terminal	Pin
DIGITAL INTERLOCK	-XD24	1
START/STOP 1 - START	-XDI	1
FORWARD/REVERSE 1 - REVERSE	-XDI	2
RESET	-XDI	3
EMERGENCY STOP 0 - ACTIVE	-XDI	4
NOT SPECIFIED	-XDI	5
DI6 NOT IN USE	-XDI	6
OUTPUT: READY	-XDIO	1
OUTPUT: RUNNING	-XDIO	2

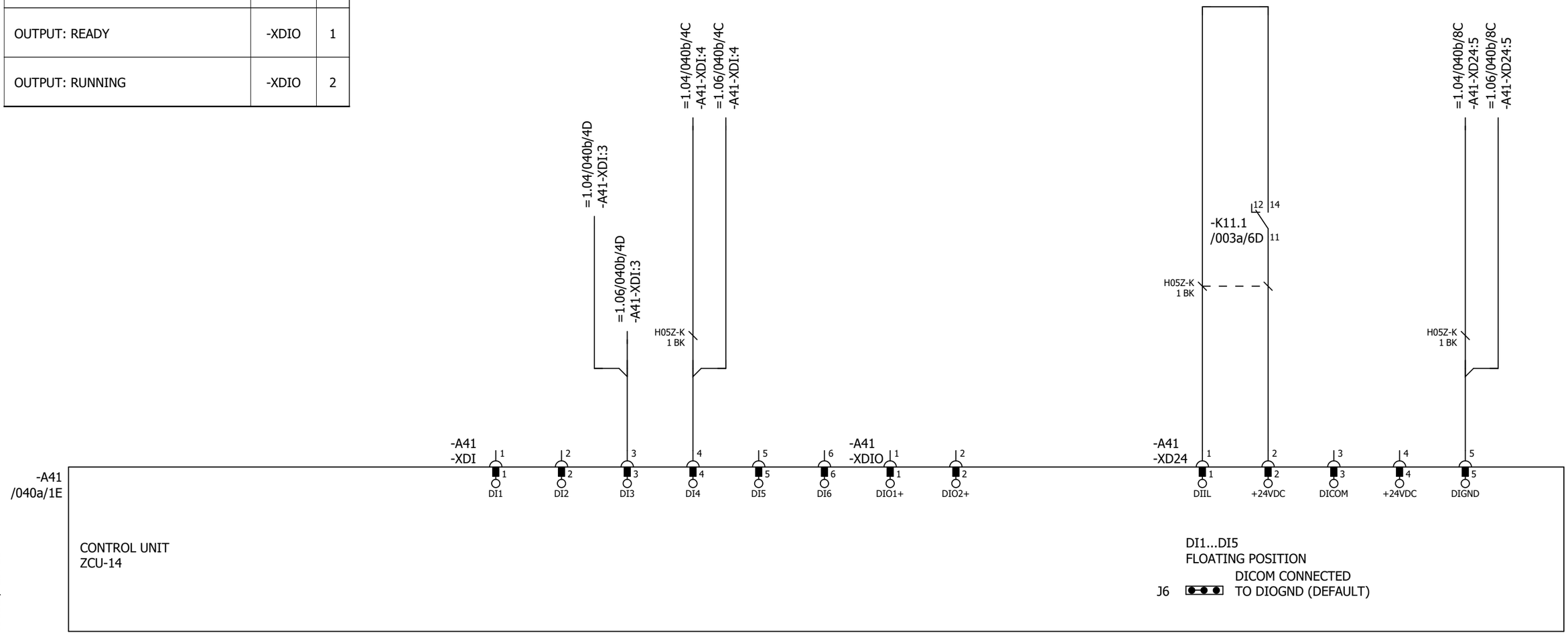

Cust. Doc. No.	Prep. Sky-Xin Zhang 02.08.2023	Title CONTROL BOARD INV1.05 ACS880-107-0078A-3 400V	Circuit diagram EFS2	Item Des.	
Cust. Ref. No.	App.		SAP Doc. No.	= 1.05 + 1.01.1	
Customer WMMP	Project Zhaka Jack-up Lift System Zhaka Jack-up Lift System-1	ABB	EPLAN Doc. No. 3ABDC230674 - 1.05		
			ABB Ref. No.	Rev. .1	Sheet 040b
			Resp. Dept.	Cont.	040c

Control and status signals	Terminal	Pin
MOTOR TEMP. MONITORING 0(2)…10V	-XAI	4
AI2 NOT SPECIFIED BY DEFAULT NOT IN USE 0(4)…20mA	-XAI	6
CURR SOU MOT TEMP MONIT 0(4)...20mA	-XAO	1
CURRENT 0(4)…20mA ↔ 0(4)…MOTOR CURRENT	-XAO	3

P345812 / 29711

Cust. Doc. No.	Prep. Sky-Xin Zhang 02.08.2023	Title CONTROL BOARD INV1.05 ACS880-107-0078A-3 400V	Circuit diagram EFS2
Cust. Ref. No.	App.		SAP Doc. No.
Customer WMMP	Project Zhaka Jack-up Lift System Zhaka Jack-up Lift System-1		EPLAN Doc. No. 3ABDC230674 - 1.05
			ABB Ref. No.
			Resp. Dept.

Item Des.
= 1.05
+ 1.01.1

Rev. .1 Sheet 040c
Cont. 040d

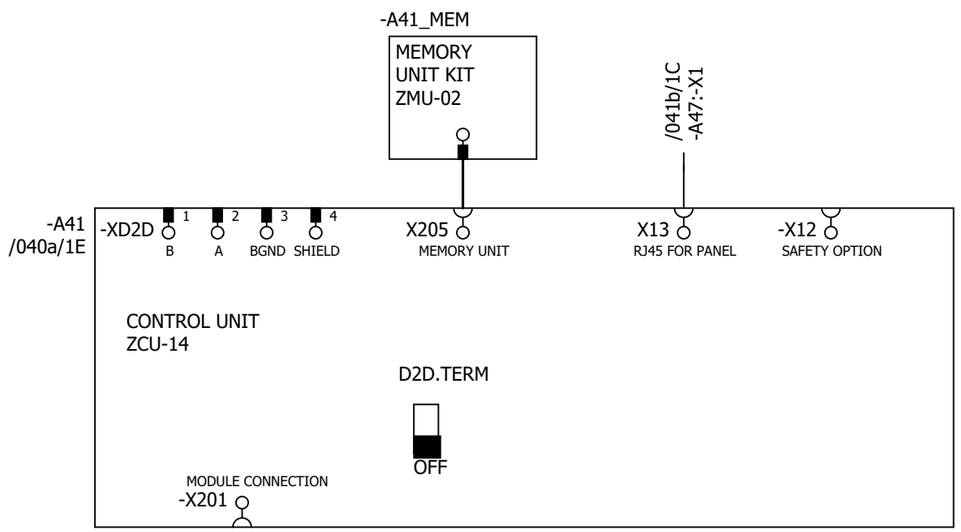

P345812 / 29711

Cust. Doc. No.	Prep. Sky-Xin Zhang 02.08.2023	Title CONTROL BOARD INV1.05 ACS880-107-0078A-3 400V	Circuit diagram EFS2
Cust. Ref. No.	App.		SAP Doc. No.
Customer WMMP	Project Zhaka Jack-up Lift System Zhaka Jack-up Lift System-1		EPLAN Doc. No. 3ABDC230674 - 1.05
			ABB Ref. No.
			Resp. Dept.

Item Des.	= 1.05 + 1.01.1
Rev. .1	Sheet 040d
Cont.	041a

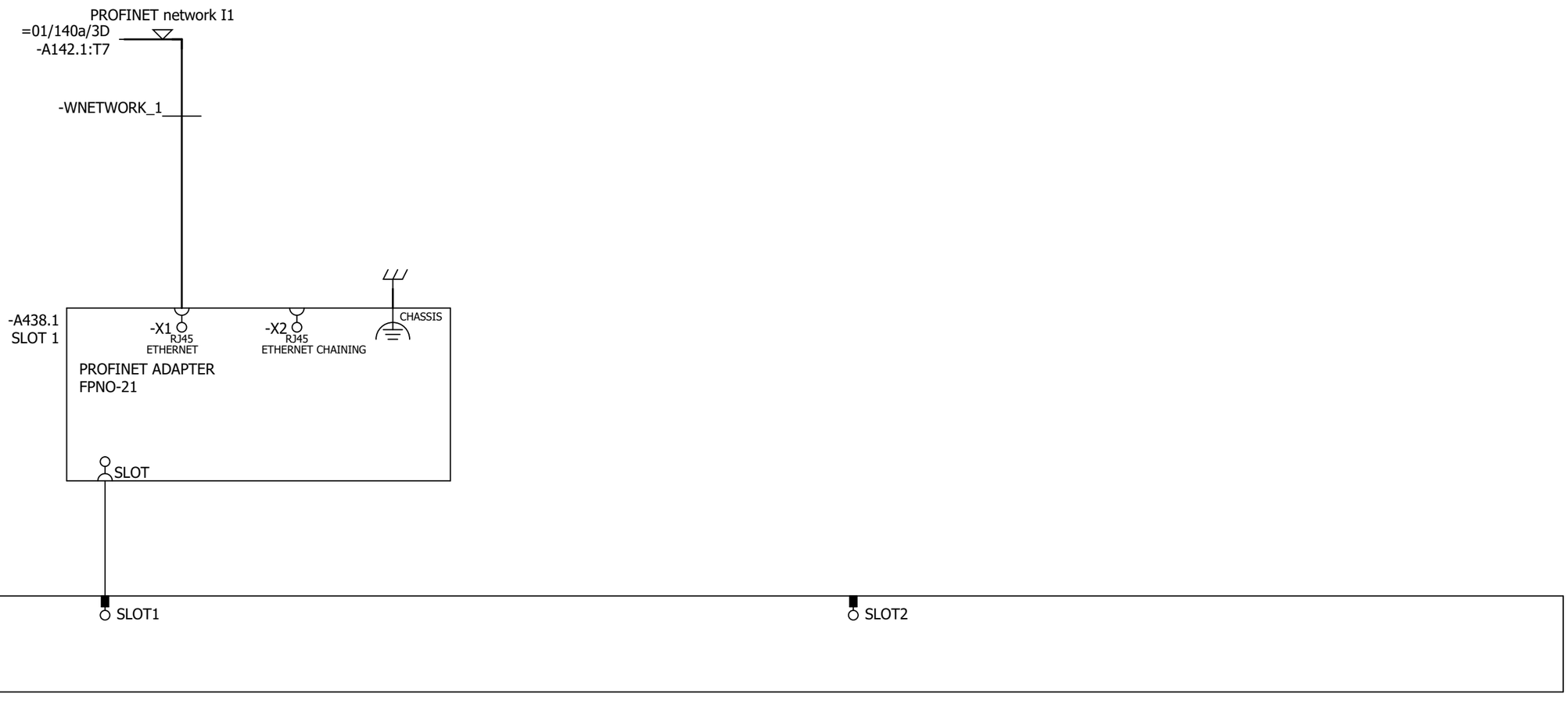

Cust. Doc. No.	Prep. Sky-Xin Zhang 02.08.2023	Title OPTION CARDS INV1.05 ACS880-107-0078A-3 400V	Circuit diagram EFS2
Cust. Ref. No.	App.		SAP Doc. No.
Customer WMMP	Project Zhaka Jack-up Lift System Zhaka Jack-up Lift System-1		EPLAN Doc. No. 3ABDC230674 - 1.05
			ABB Ref. No.
			Resp. Dept.

Item Des.
= 1.05
+ 1.01.1

Rev. .1 Sheet 041a
Cont. 041b

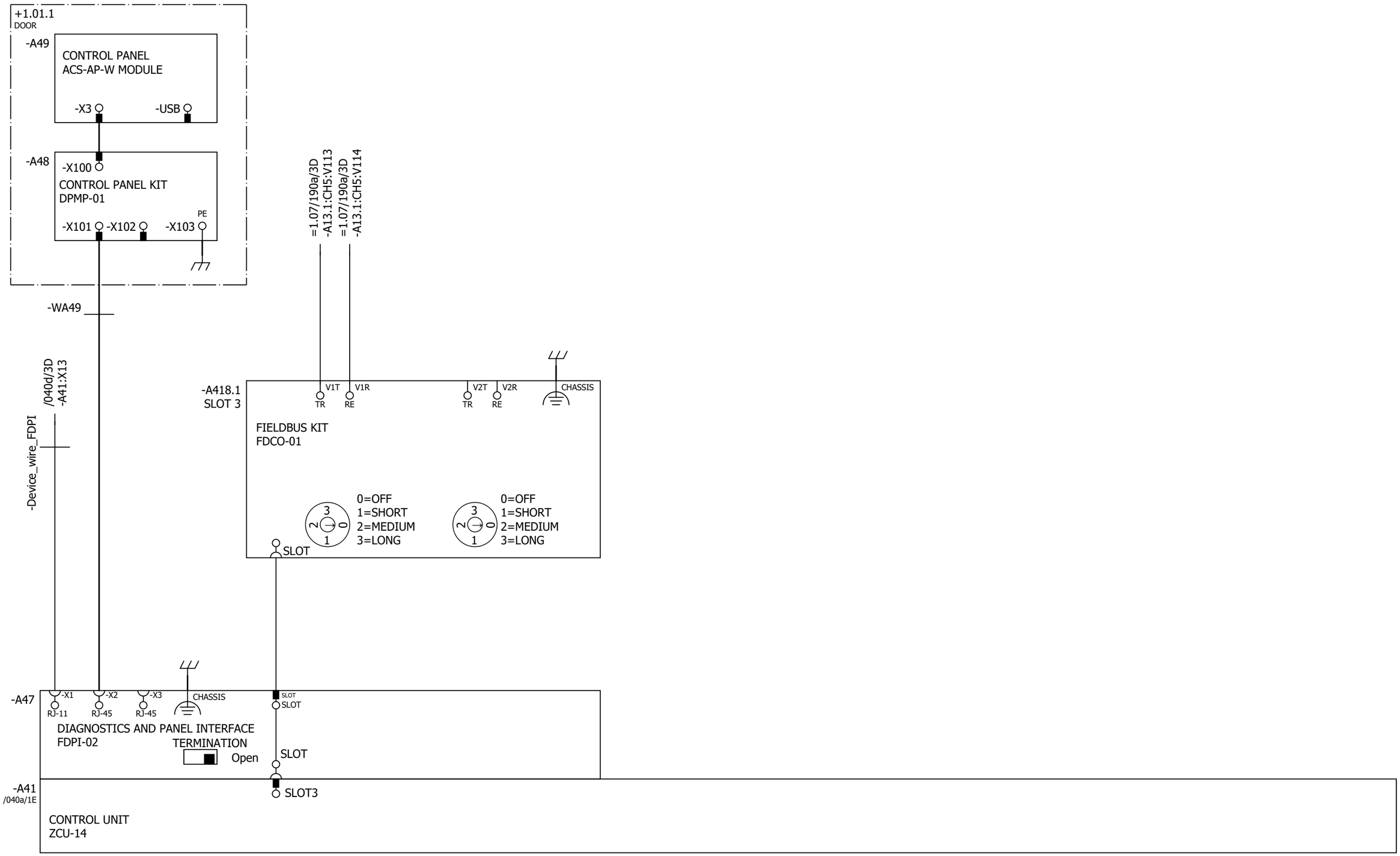

Cust. Doc. No.	Prep. Sky-Xin Zhang 02.08.2023	Title OPTION CARDS	Circuit diagram EFS2	Item Des.
Cust. Ref. No.	App.	INV1.05	SAP Doc. No.	= 1.05
Customer WMMP	Project Zhaka Jack-up Lift System	ACS880-107-0078A-3	EPLAN Doc. No. 3ABDC230674 - 1.05	+ 1.01.1
	Zhaka Jack-up Lift System-1	400V	ABB Ref. No.	Rev. .1 Sheet 041b
			Resp. Dept.	Cont. 061a

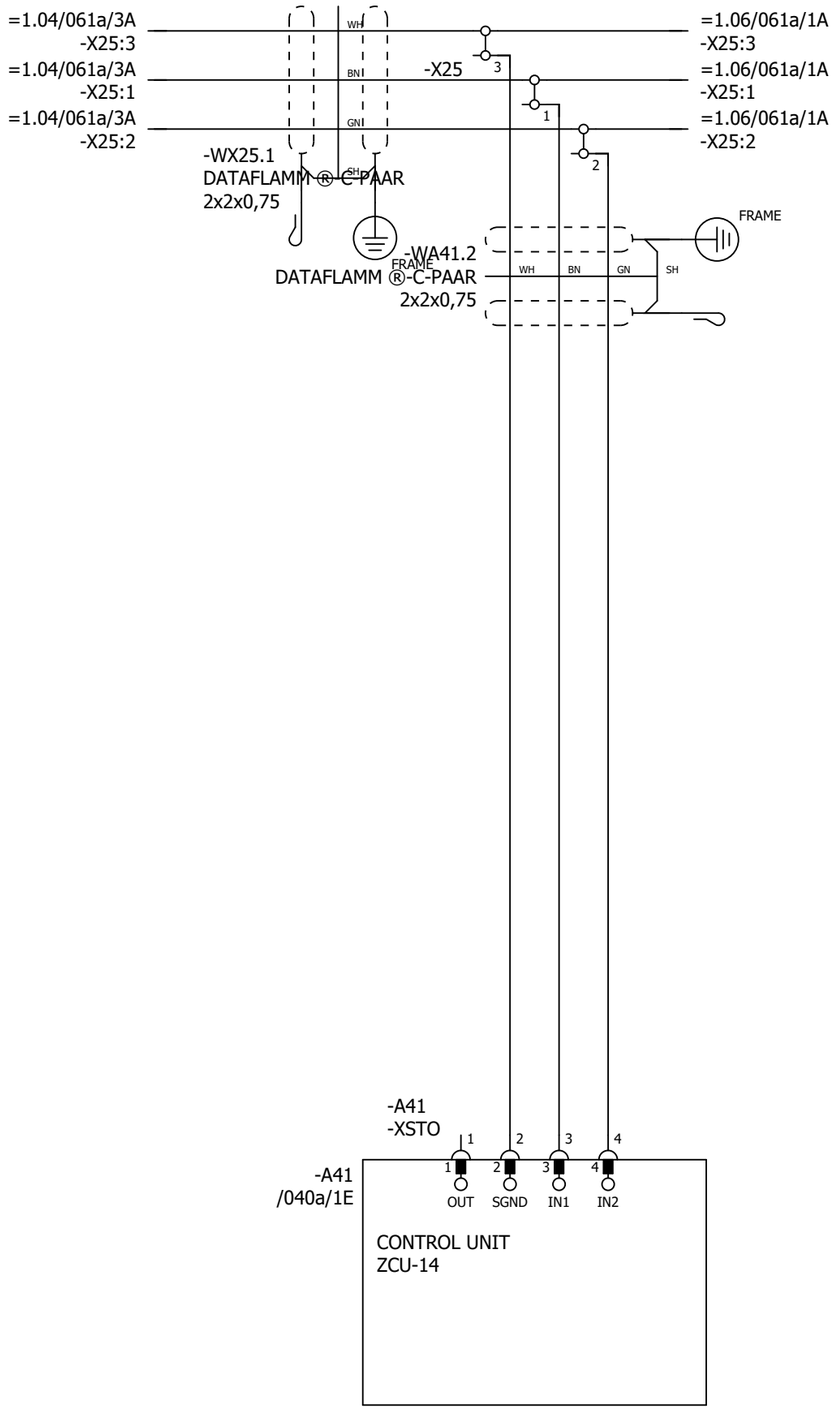

P345812 / 29711

SAFETY CIRCUIT
MACRO REVISION 6
RULES CONVERTED 19.7.2023

Cust. Doc. No.	Prep. Sky-Xin Zhang 02.08.2023	Title SAFETY CIRCUIT INV1.05 ACS880-107-0078A-3 400V	Circuit diagram EFS2
Cust. Ref. No.	App.		SAP Doc. No.
Customer WMMP	Project Zhaka Jack-up Lift System Zhaka Jack-up Lift System-1		EPLAN Doc. No. 3ABDC230674 - 1.05
			ABB Ref. No.
			Resp. Dept.

Item Des.
= 1.05
+ 1.01.1

Rev. .1 Sheet 061a

Cont. &MPC/Part list_1

Part list: 3ABDC230674DU01005

Item	Sort String	Qty.Str	Unit	Component Number	Description and text	Technical data
0010		1.000	ST		ACS880-107-0078A-3+A012+B053+C121+C132+	
0020		1.000	ST		_C206+E210+F272+F287+F288+G300+G307+G315	
0030		1.000	ST		_+G320+G330+G344+H352+H367+K450+K492+L50	
0040		1.000	ST		_3+P913+Q964	
0050		1.000	ST		=1.05	
0060		1.000	ST		+1.01.1,INU3	
0070		1.000	ST		Powerconversionequipment	
0080	-A41_MEM	1.000	PC	3AXD50000006010	MEMORY UNIT KIT ZMU-02	
0090	-T11	1.000	PC	3AUA0000120009-M	ACS880-104-0078A-3+P922	+P922
0100	SCREW	1.000	PC	3AFE68681481	SCREW K30X10 TORX	PT WN1452 ZN
0110	SOFTWARE	1.000	PC	3AUA0000153462	SOFTWARE PRIMARY CONTROL PROGRA	AINF6 FOR ZCU-12/14
0120		1.000	ST		R4imoduleDCfuse	
0130	-F11.1-2	2.000	PC	3AXD50000000219	FUSE FR27UQ69V160T/160A	6.921 CP URQ 27X60MM FERRULE;AR
0140		1.000	ST		R3i-R4imoduleDCfusebase	
0150	(-F11.1-2)	2.000	PC	3AUA0000089227	FUSE HOLDER FUSE BASE US271MI 150A	FUSE BASE US271MI 150A 800V
0160		1.000	ST		24VDCsupplyZCU	
0170	-WA41_1	1.000	PC	3AXD50000005218	WIRE HARNESS 24VDC SUPPLY X51 ZCU V	HALOGEN FREE;X51_A51
0180		1.000	ST		Rooffancontrol	
0190	-WA41_3	1.000	PC	3AXD50000002688	WIRE HARNESS FAN CONTROL MAIN WIRE	HALOGEN FREE;X208_X26.3
0200		1.000	ST		Bottomrowmodulewireharness	
0210	-WT11	1.000	PC	3AXD50000002418	WIRE HARNESS R4I FUSE_MODULE BR V2	HALOGEN FREE;MAIN CIRCUIT WIRE SET
0220		1.000	ST		Optionmodule	
0230	-A418.1	1.000	PC	3AUA0000107392	COMMUNIC. ADAPTER FDCO-01	
0240		1.000	ST		Controlpanel	
0250	-A47	1.000	PC	3AUA0000108650	FIELDBUS KIT FDPI-02	PANEL BUS ADAPTER
0260		1.000	ST		DCfusesupervision	
0270	-K11.1-2	2.000	PC	3AXD50000021313	RELAY DEK_REL_G24/21	250 V;6 A;COIL 24VDC
0280		1.000	ST		FieldBus	
0290	-A438.1	1.000	PC	3AXD50000192779	OPTION MODULE FPNO-21	PROFINET IO
0300		1.000	ST		Supplementtorelay	
0310	(-K11.1)	1.000	PC	3AXD50000021312	TERMINAL BLOCK ST EB2_DIK_RD 2716693	2POLE, 6,15 MM PITCH;FOR DEK RELAYS

P345812 / 29711

Cust. Doc. No.	Prep.	Title PART LIST INV1.05 ACS880-107-0078A-3 400V	Item Des. = 1.05 +
Cust. Ref. No.	App.		SAP Doc. No.
Customer WMMP	Project Zhaka Jack-up Lift System Zhaka Jack-up Lift System-1		EPLAN Doc. No. 3ABDC230674 - 1.05
			ABB Ref. No. / Rev. / Sheet Part list_1
			Resp. Dept. / Cont. &EMA/1

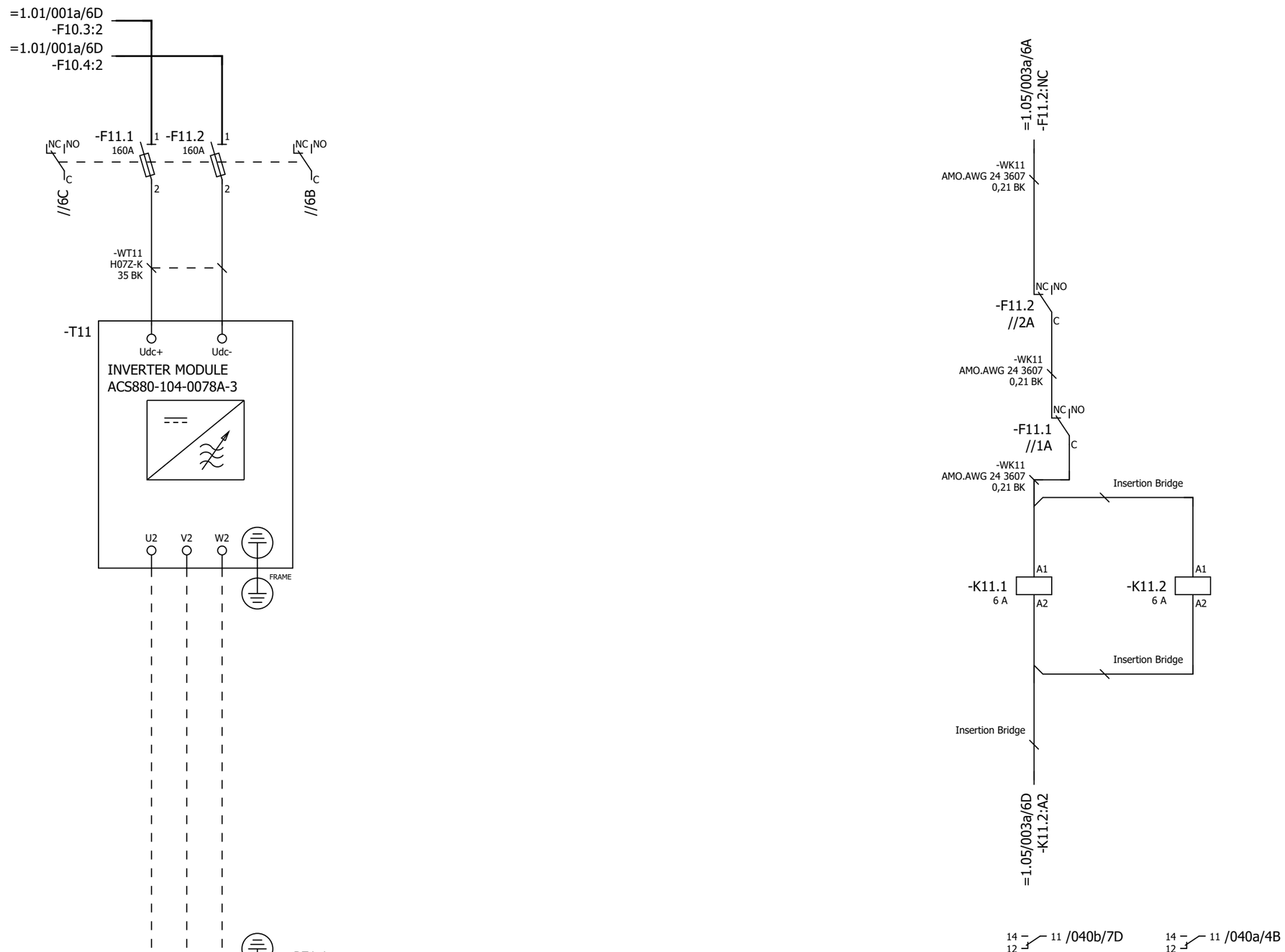

P345812 / 29711

Cust. Doc. No.	Prep. Sky-Xin Zhang 02.08.2023	Title MAIN CIRCUIT	Circuit diagram EFS2
Cust. Ref. No.	App.	INV1.06	SAP Doc. No.
Customer WMMP	Project Zhaka Jack-up Lift System	ACS880-107-0078A-3	EPLAN Doc. No. 3ABDC230674 - 1.06
	Zhaka Jack-up Lift System-1	400V	ABB Ref. No.
			Resp. Dept.

Item Des.
= 1.06
+ 1.01.1

Rev. .1 Sheet 003a
Cont. 040a

Control and status signals	Terminal	Pin
E-STOP FEEDBACK 1 - ESTOP ACTIVE	-XRO1	12
RUNNING 1 - RUNNING	-XRO2	22
FAULT (-1) 1 - NO FAULT	-XRO3	32

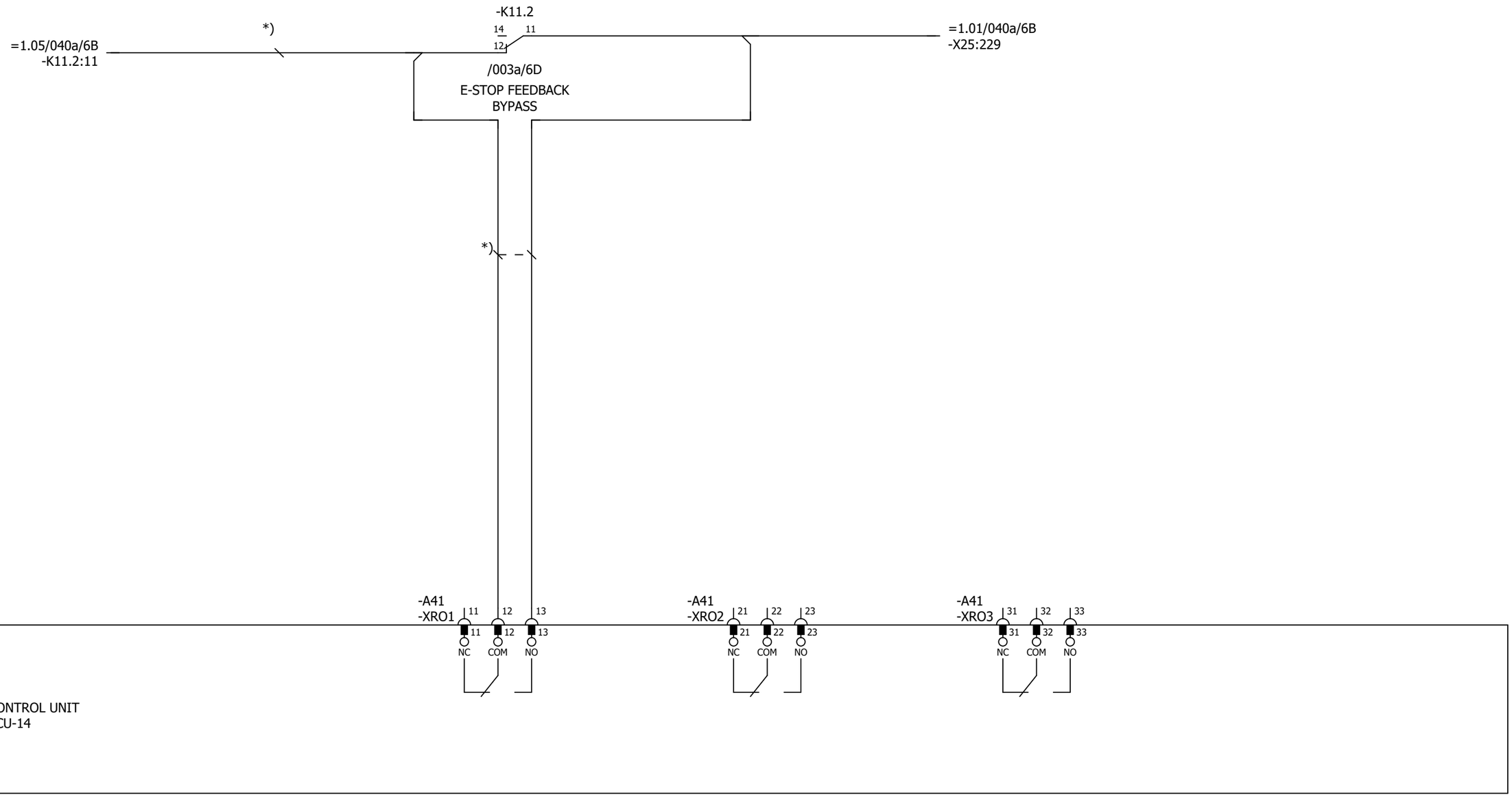

Cust. Doc. No.	Prep. Sky-Xin Zhang 02.08.2023	Title CONTROL BOARD INV1.06 ACS880-107-0078A-3 400V	Circuit diagram EFS2	Item Des.	
Cust. Ref. No.	App.		SAP Doc. No.	= 1.06 + 1.01.1	
Customer WMMP	Project Zhaka Jack-up Lift System Zhaka Jack-up Lift System-1	ABB	EPLAN Doc. No. 3ABDC230674 - 1.06		
			ABB Ref. No.	Rev. .1	Sheet 040a
			Resp. Dept.	Cont.	040b

Control and status signals	Terminal	Pin
DIGITAL INTERLOCK	-XD24	1
START/STOP 1 - START	-XDI	1
FORWARD/REVERSE 1 - REVERSE	-XDI	2
RESET	-XDI	3
EMERGENCY STOP 0 - ACTIVE	-XDI	4
NOT SPECIFIED	-XDI	5
DI6 NOT IN USE	-XDI	6
OUTPUT: READY	-XDIO	1
OUTPUT: RUNNING	-XDIO	2

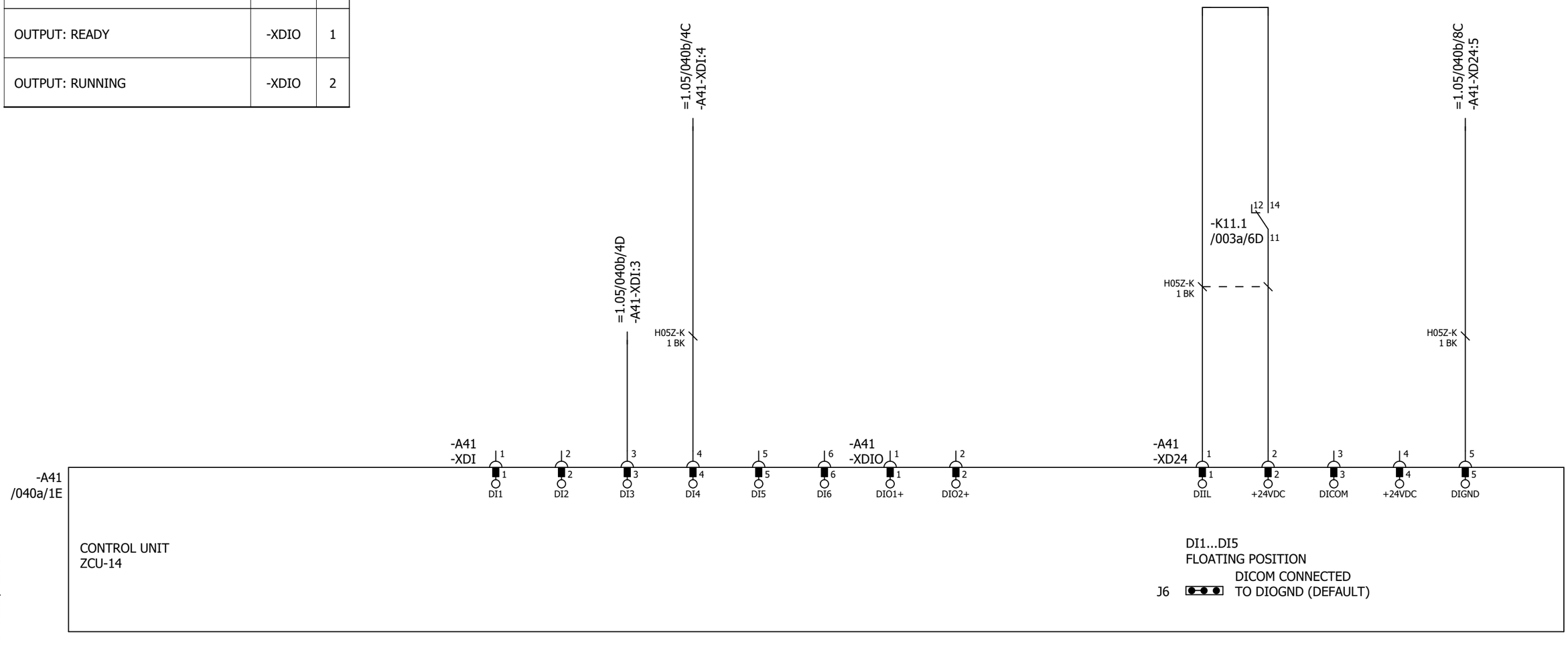

Cust. Doc. No.	Prep. Sky-Xin Zhang 02.08.2023	Title CONTROL BOARD INV1.06 ACS880-107-0078A-3 400V	Circuit diagram EFS2	Item Des.	
Cust. Ref. No.	App.		SAP Doc. No.	= 1.06 + 1.01.1	
Customer WMMP	Project Zhaka Jack-up Lift System Zhaka Jack-up Lift System-1		EPLAN Doc. No. 3ABDC230674 - 1.06		
			ABB Ref. No.	Rev. .1	Sheet 040b
			Resp. Dept.	Cont.	040c

Control and status signals	Terminal	Pin
MOTOR TEMP. MONITORING 0(2)…10V	-XAI	4
AI2 NOT SPECIFIED BY DEFAULT NOT IN USE 0(4)…20mA	-XAI	6
CURR SOU MOT TEMP MONIT 0(4)...20mA	-XAO	1
CURRENT 0(4)…20mA ↔ 0(4)…MOTOR CURRENT	-XAO	3

P345812 / 29711

Cust. Doc. No.	Prep. Sky-Xin Zhang 02.08.2023	Title CONTROL BOARD INV1.06 ACS880-107-0078A-3 400V	Circuit diagram EFS2
Cust. Ref. No.	App.		SAP Doc. No.
Customer WMMP	Project Zhaka Jack-up Lift System Zhaka Jack-up Lift System-1		EPLAN Doc. No. 3ABDC230674 - 1.06
			ABB Ref. No.
			Resp. Dept.

Item Des.
= 1.06
+ 1.01.1

Rev. .1 Sheet 040c
Cont. 040d

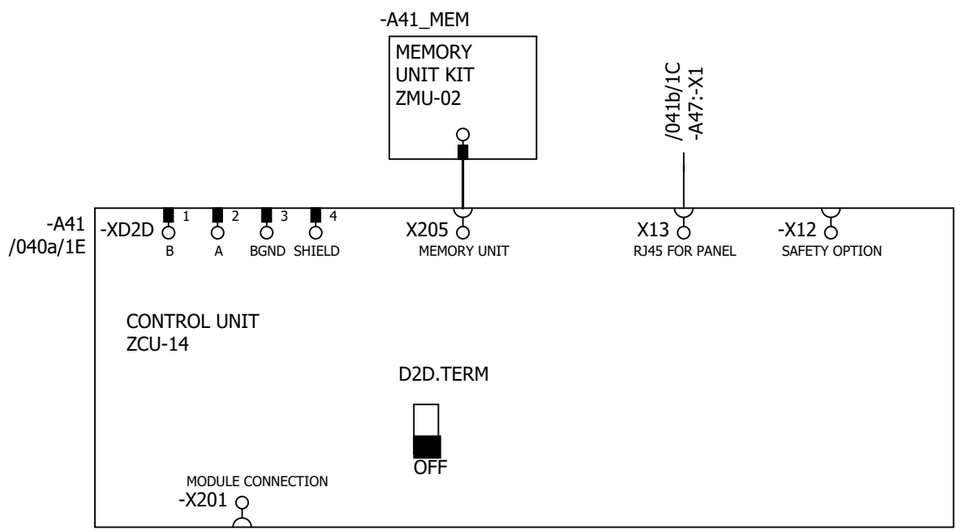

P345812 / 29711

Cust. Doc. No.	Prep. Sky-Xin Zhang 02.08.2023	Title CONTROL BOARD INV1.06 ACS880-107-0078A-3 400V	Circuit diagram EFS2
Cust. Ref. No.	App.		SAP Doc. No.
Customer WMMP	Project Zhaka Jack-up Lift System Zhaka Jack-up Lift System-1		EPLAN Doc. No. 3ABDC230674 - 1.06
			ABB Ref. No.
			Resp. Dept.

Item Des.	= 1.06 + 1.01.1
Rev. .1	Sheet 040d
Cont.	041a

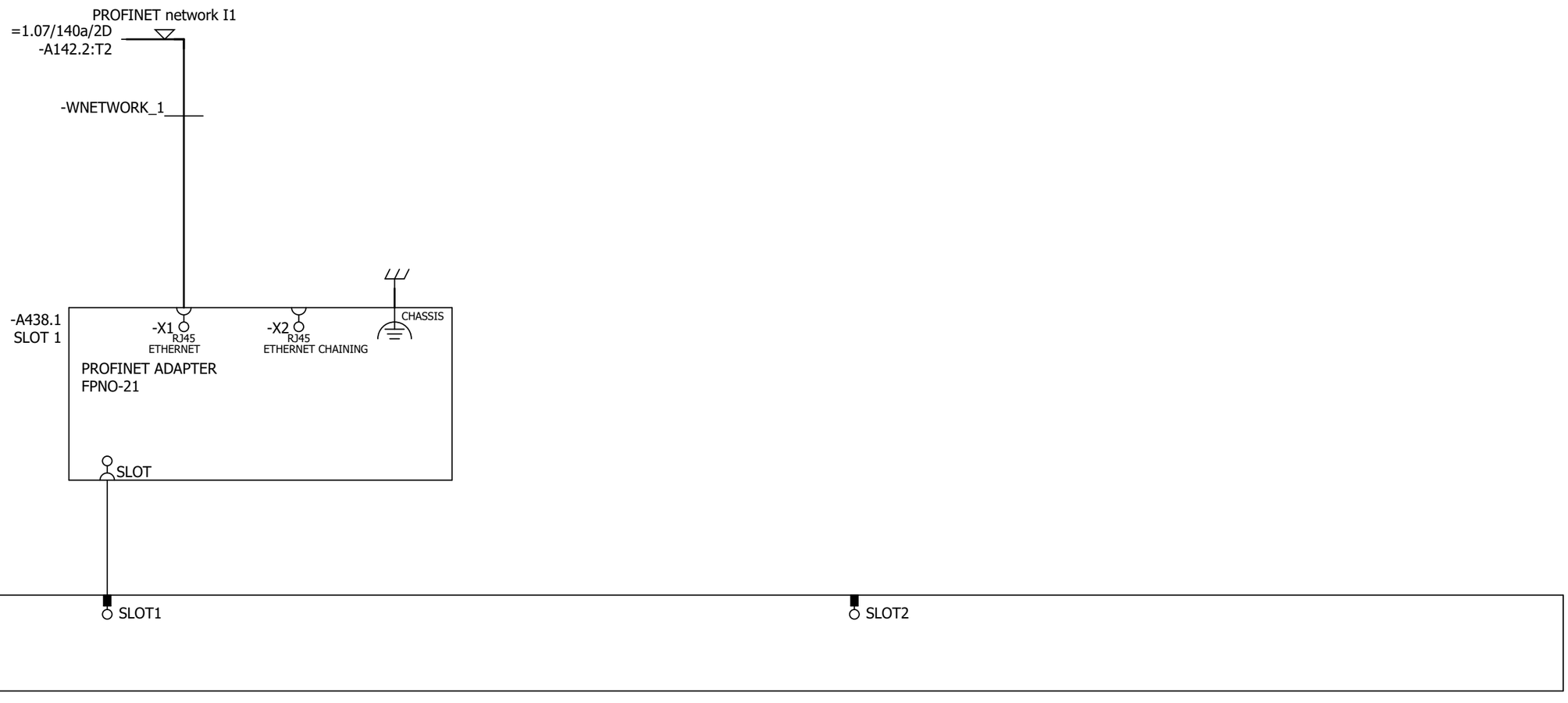

P345812 / 29711

Cust. Doc. No.	Prep. Sky-Xin Zhang 02.08.2023	Title OPTION CARDS INV1.06 ACS880-107-0078A-3 400V	Circuit diagram EFS2
Cust. Ref. No.	App.		SAP Doc. No.
Customer WMMP	Project Zhaka Jack-up Lift System Zhaka Jack-up Lift System-1		EPLAN Doc. No. 3ABDC230674 - 1.06
			ABB Ref. No.
			Resp. Dept.

Item Des.
= 1.06
+ 1.01.1

Rev. .1 Sheet 041a
Cont. 041b

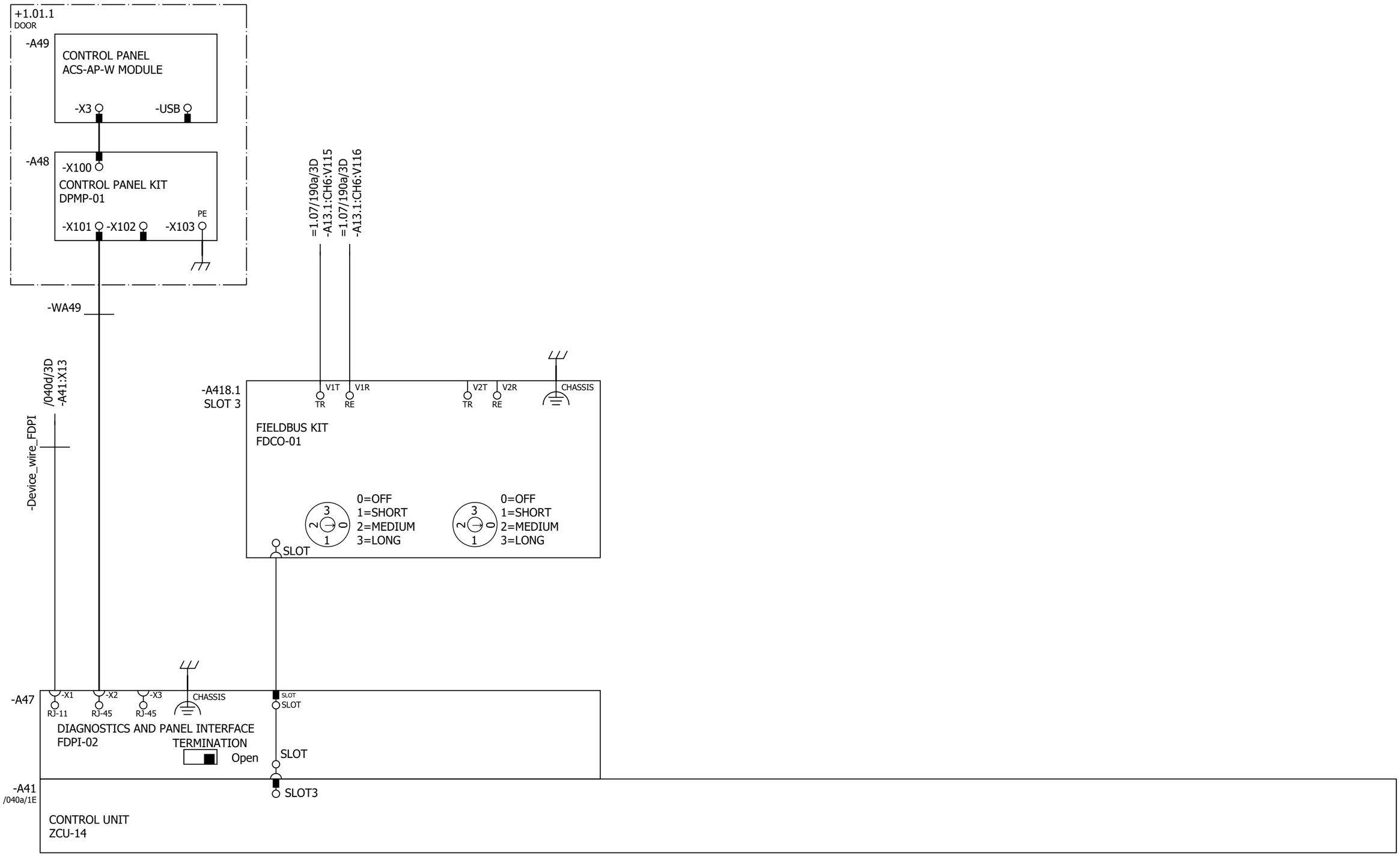

Cust. Doc. No.	Prep. Sky-Xin Zhang 02.08.2023	Title OPTION CARDS	Circuit diagram EFS2	Item Des.
Cust. Ref. No.	App.	INV1.06	SAP Doc. No.	= 1.06
Customer WMMP	Project Zhaka Jack-up Lift System	ACS880-107-0078A-3	EPLAN Doc. No. 3ABDC230674 - 1.06	+ 1.01.1
	Zhaka Jack-up Lift System-1	400V	ABB Ref. No.	Rev. .1 Sheet 041b
			Resp. Dept.	Cont. 061a

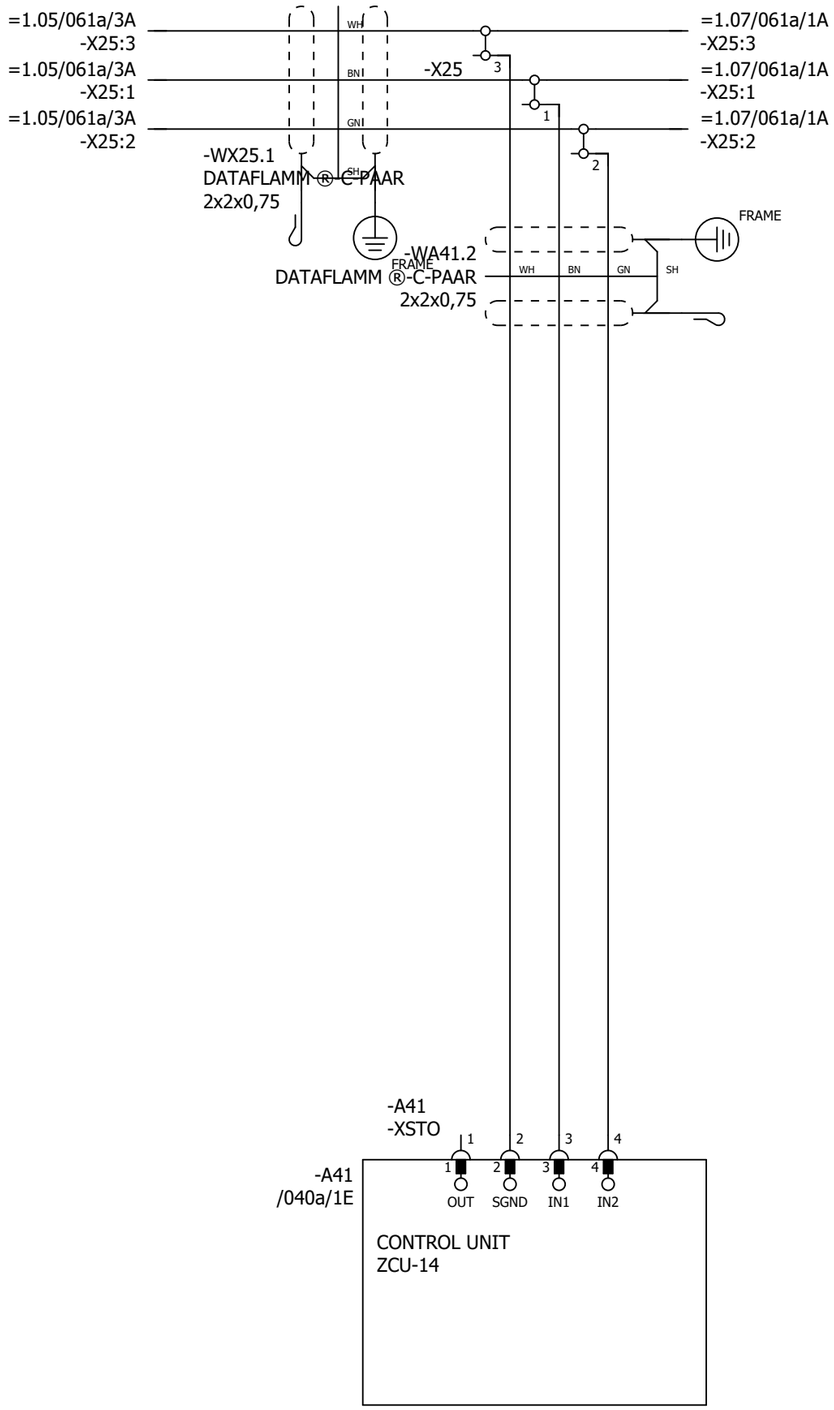

P345812 / 29711

SAFETY CIRCUIT
MACRO REVISION 6
RULES CONVERTED 19.7.2023

Cust. Doc. No.	Prep. Sky-Xin Zhang 02.08.2023	Title SAFETY CIRCUIT	Circuit diagram EFS2	Item Des.	
Cust. Ref. No.	App.	INV1.06	SAP Doc. No.	= 1.06	
Customer WMMP	Project Zhaka Jack-up Lift System	ACS880-107-0078A-3	EPLAN Doc. No. 3ABDC230674 - 1.06	+ 1.01.1	
	Zhaka Jack-up Lift System-1	400V	ABB Ref. No.	Rev. .1	Sheet 061a
			Resp. Dept.	Cont.	&MPC/Part list_1

Part list: 3ABDC230674DU01006

Item	Sort String	Qty.Str	Unit	Component Number	Description and text	Technical data
0010		1.000	ST		ACS880-107-0078A-3+A012+B053+C121+C132+	
0020		1.000	ST		_C206+E210+F272+F287+F288+G300+G307+G315	
0030		1.000	ST		_+G320+G330+G344+H352+H367+K450+K492+K49	
0040		1.000	ST		_3+L503+P913+Q964	
0050		1.000	ST		=1.06	
0060		1.000	ST		+1.01.1,INU3	
0070		1.000	ST		Powerconversionequipment	
0080	-A41_MEM	1.000	PC	3AXD50000006010	MEMORY UNIT KIT ZMU-02	
0090	-T11	1.000	PC	3AUA0000120009-M	ACS880-104-0078A-3+P922	+P922
0100	SCREW	1.000	PC	3AFE68681481	SCREW K30X10 TORX	PT WN1452 ZN
0110	SOFTWARE	1.000	PC	3AUA0000153462	SOFTWARE PRIMARY CONTROL PROGRA	AINF6 FOR ZCU-12/14
0120		1.000	ST		R4imoduleDCfuse	
0130	-F11.1-2	2.000	PC	3AXD50000000219	FUSE FR27UQ69V160T/160A	6.921 CP URQ 27X60MM FERRULE;AR
0140		1.000	ST		R3i-R4imoduleDCfusebase	
0150	(-F11.1-2)	2.000	PC	3AUA0000089227	FUSE HOLDER FUSE BASE US271MI 150A	FUSE BASE US271MI 150A 800V
0160		1.000	ST		24VDCsupplyZCU	
0170	-WA41_1	1.000	PC	3AXD50000005218	WIRE HARNESS 24VDC SUPPLY X51 ZCU V	HALOGEN FREE;X51_A51
0180		1.000	ST		Rooffancontrol	
0190	-WA41_3	1.000	PC	3AXD50000002688	WIRE HARNESS FAN CONTROL MAIN WIRE	HALOGEN FREE;X208_X26.3
0200		1.000	ST		Bottomrowmodulewireharness	
0210	-WT11	1.000	PC	3AXD50000002418	WIRE HARNESS R4I FUSE_MODULE BR V2	HALOGEN FREE;MAIN CIRCUIT WIRE SET
0220		1.000	ST		Optionmodule	
0230	-A418.1	1.000	PC	3AUA0000107392	COMMUNIC. ADAPTER FDCO-01	
0240		1.000	ST		Controlpanel	
0250	-A47	1.000	PC	3AUA0000108650	FIELDBUS KIT FDPI-02	PANEL BUS ADAPTER
0260		1.000	ST		DCfusesupervision	
0270	-K11.1-2	2.000	PC	3AXD50000021313	RELAY DEK_REL_G24/21	250 V;6 A;COIL 24VDC
0280		1.000	ST		Profinetswitch	
0290		1.000	ST		FieldBus	
0300	-A438.1	1.000	PC	3AXD50000192779	OPTION MODULE FPNO-21	PROFINET IO
0310		1.000	ST		Supplementtorelay	
0320	(-K11.1)	1.000	PC	3AXD50000021312	TERMINAL BLOCK ST EB2_DIK_RD 2716693	2POLE, 6,15 MM PITCH;FOR DEK RELAYS

P345812 / 29711

Cust. Doc. No.	Prep.	Title PART LIST INV1.06 ACS880-107-0078A-3 400V	Item Des. = 1.06 +
Cust. Ref. No.	App.		SAP Doc. No.
Customer WMMP	Project Zhaka Jack-up Lift System Zhaka Jack-up Lift System-1		EPLAN Doc. No. 3ABDC230674 - 1.06
			ABB Ref. No. / Rev. / Sheet Part list_1
			Resp. Dept. / Cont. &EMA/1

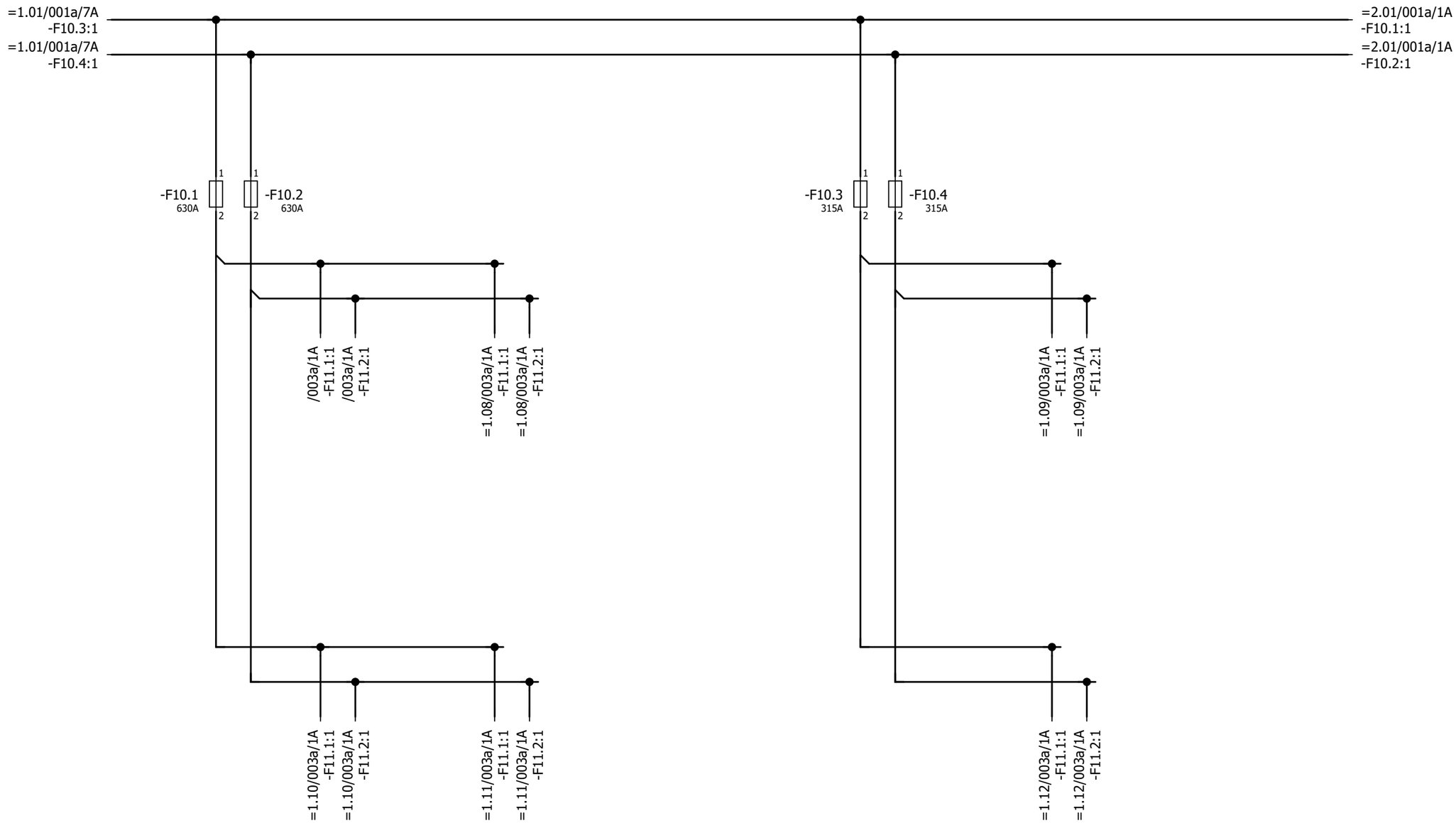

P345812 / 29711

Cust. Doc. No.	Prep. Sky-Xin Zhang 02.08.2023	Title MAIN CIRCUIT INV1.07 ACS880-107-0078A-3 400V	Circuit diagram EFS2
Cust. Ref. No.	App.		SAP Doc. No.
Customer WMMP	Project Zhaka Jack-up Lift System Zhaka Jack-up Lift System-1		EPLAN Doc. No. 3ABDC230674 - 1.07
			ABB Ref. No.
			Resp. Dept.

Item Des.
= 1.07
+ 1.07.1

Rev. .1 Sheet 001a
Cont. 003a

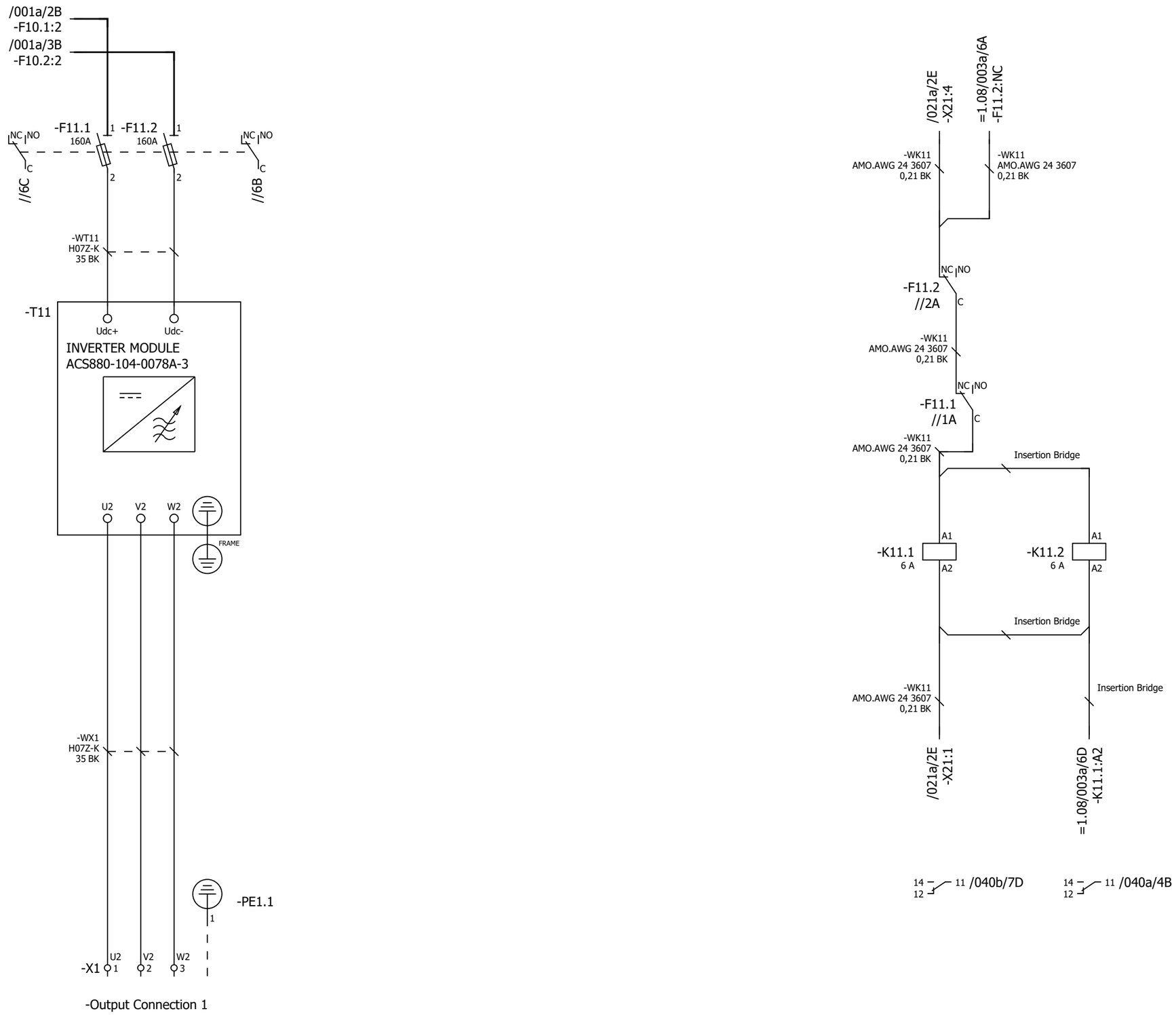

P345812 / 29711

Cust. Doc. No.	Prep. Sky-Xin Zhang 02.08.2023	Title MAIN CIRCUIT	Circuit diagram EFS2
Cust. Ref. No.	App.	INV1.07	SAP Doc. No.
Customer WMMP	Project Zhaka Jack-up Lift System	ACS880-107-0078A-3	EPLAN Doc. No. 3ABDC230674 - 1.07
	Zhaka Jack-up Lift System-1	400V	ABB Ref. No.
			Resp. Dept.

Item Des.
= 1.07
+ 1.07.1

Rev. .1 Sheet 003a
Cont. 020a

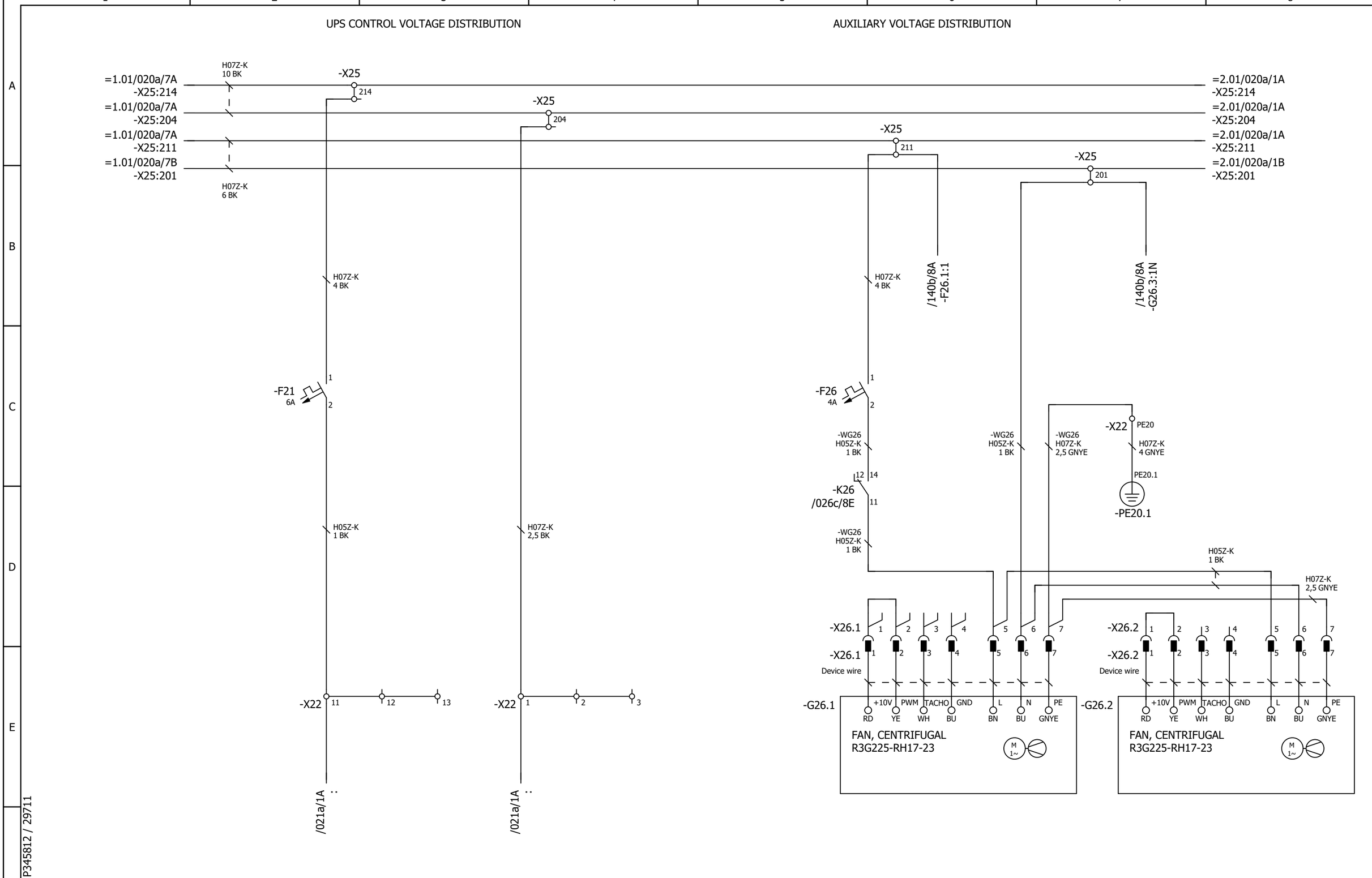

Cust. Doc. No.	Prep. Sky-Xin Zhang 02.08.2023	Title AUXILIARY VOLTAGE DISTRIBUTION	Circuit diagram EFS2	Item Des.	
Cust. Ref. No.	App.	INV1.07	SAP Doc. No.	= 1.07	
Customer WMMP	Project Zhaka Jack-up Lift System	ACS880-107-0078A-3	EPLAN Doc. No. 3ABDC230674 - 1.07	+ 1.07.1	
	Zhaka Jack-up Lift System-1	400V	ABB Ref. No.	Rev. .1	Sheet 020a
			Resp. Dept.	Cont.	021a

24V CONTROL VOLTAGE DISTRIBUTION

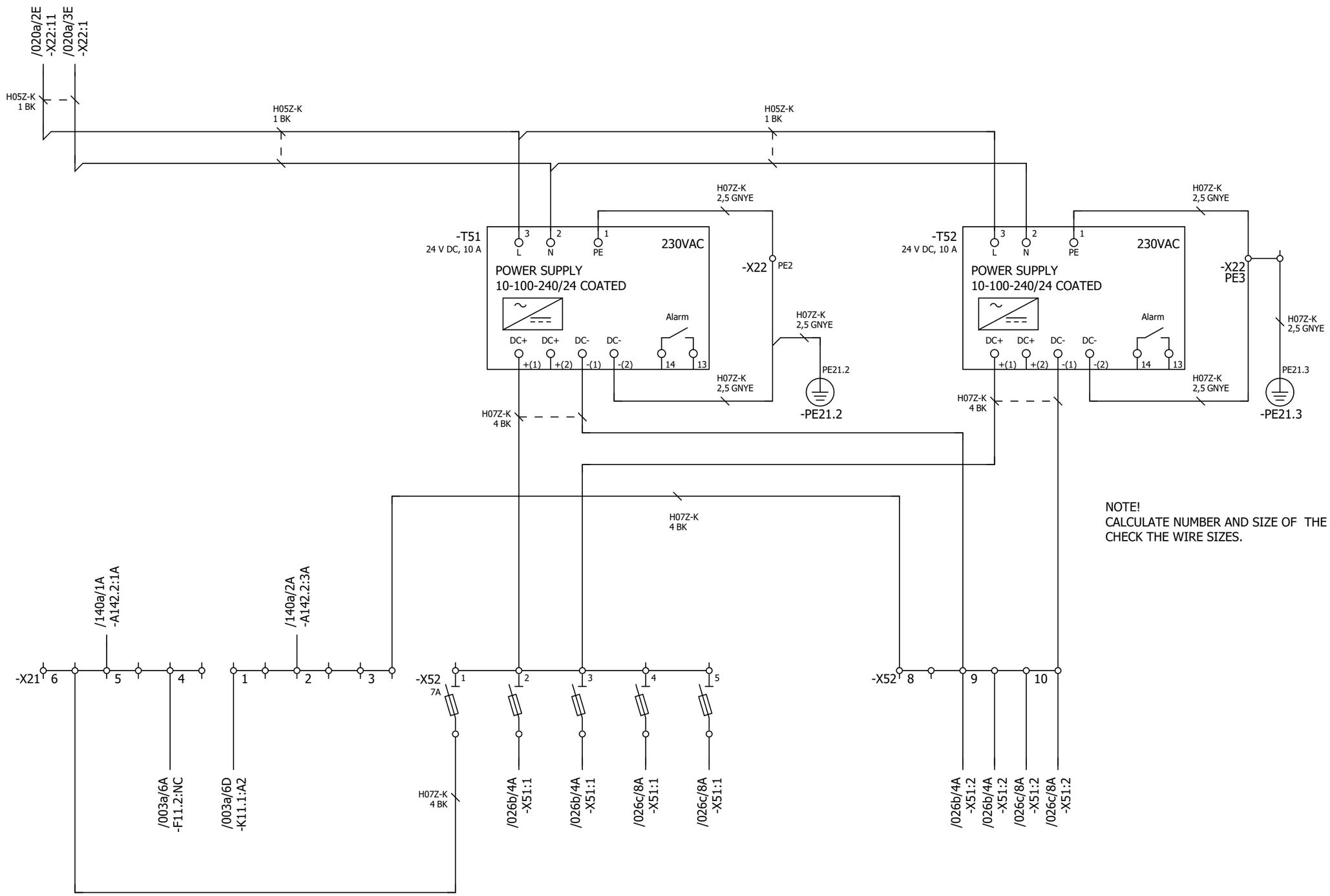

NOTE!
CALCULATE NUMBER AND SIZE OF THE POWER.
CHECK THE WIRE SIZES.

P345812 / 29711

Cust. Doc. No.	Prep. Sky-Xin Zhang 02.08.2023	Title AUXILIARY VOLTAGE DISTRIBUTION	Circuit diagram EFS2	Item Des.	
Cust. Ref. No.	App.	INV1.07	SAP Doc. No.	= 1.07	
Customer WMMP	Project Zhaka Jack-up Lift System	ACS880-107-0078A-3	EPLAN Doc. No. 3ABDC230674 - 1.07	+ 1.07.1	
	Zhaka Jack-up Lift System-1	400V	ABB Ref. No.	Rev. .1	Sheet 021a
			Resp. Dept.	Cont.	026a

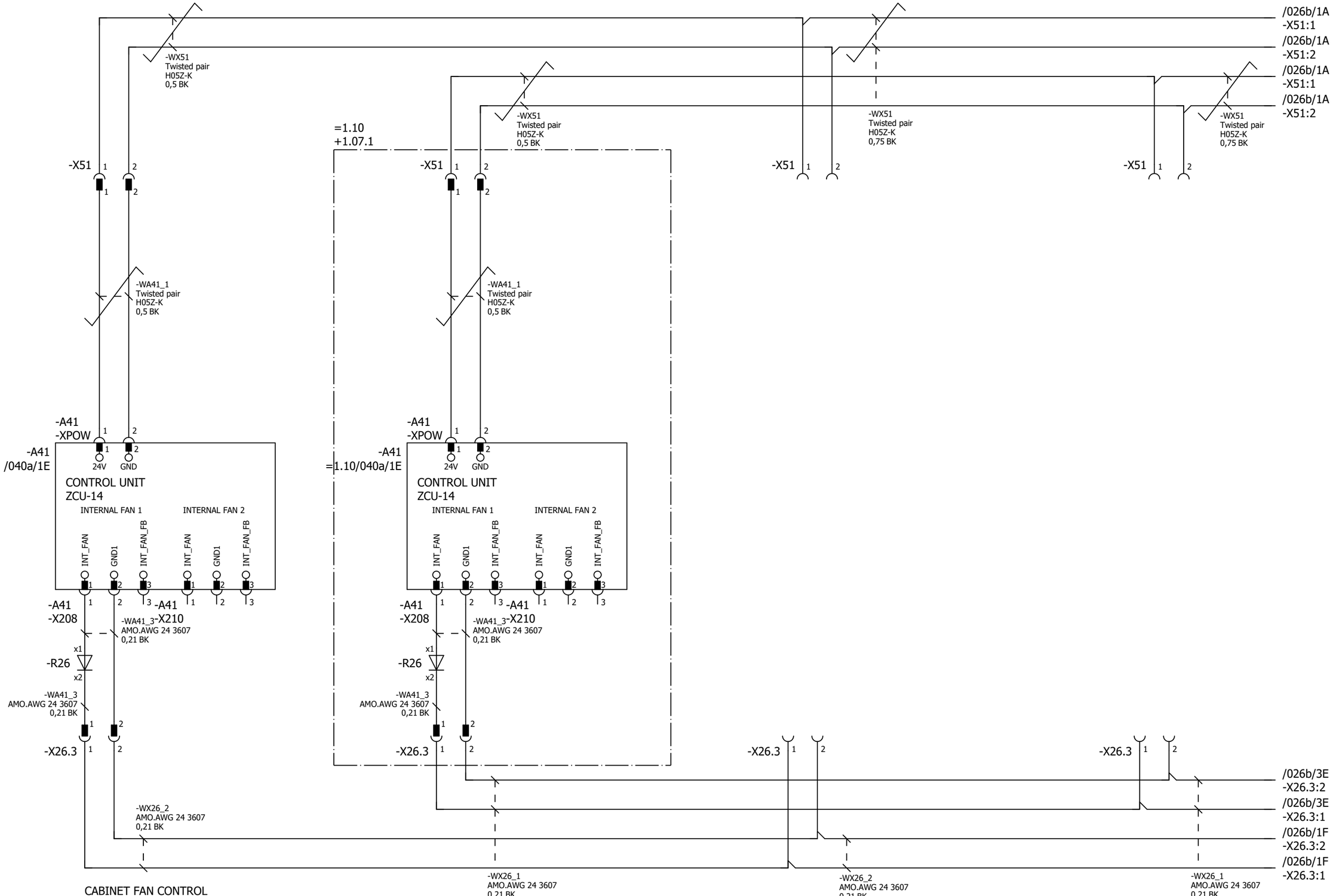

Cust. Doc. No.	Prep. Sky-Xin Zhang 02.08.2023	Title CABINET FAN CONTROL ZCU UPS, 24V FSO, FEA	Circuit diagram EFS2 / Item Des.
Cust. Ref. No.	App.	INV1.07	SAP Doc. No. / = 1.07
Customer WMMP	Project Zhaka Jack-up Lift System	ACS880-107-0078A-3	EPLAN Doc. No. 3ABDC230674 - 1.07 / + 1.07.1
	Zhaka Jack-up Lift System-1	400V	ABB Ref. No. / Rev. .1 / Sheet 026a
			Resp. Dept. / Cont. 026b

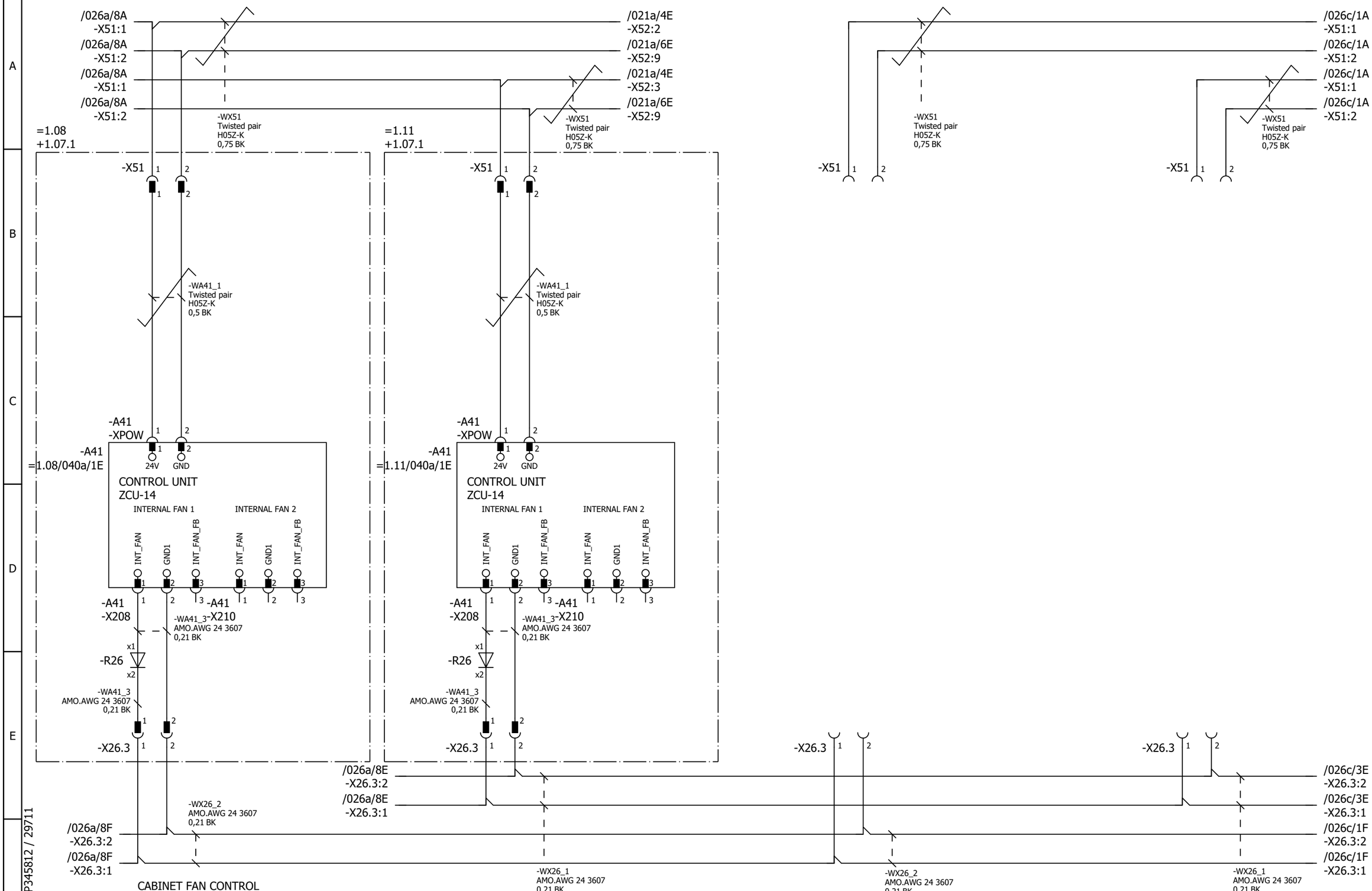

Cust. Doc. No.	Prep. Sky-Xin Zhang 02.08.2023	Title CABINET FAN CONTROL ZCU UPS, 24V FSO, FEA	Circuit diagram EFS2	Item Des.	
Cust. Ref. No.	App.	INV1.07	SAP Doc. No.	= 1.07	
Customer WMMP	Project Zhaka Jack-up Lift System	ACS880-107-0078A-3	EPLAN Doc. No. 3ABDC230674 - 1.07	+ 1.07.1	
		400V	ABB Ref. No.	Rev. .1	Sheet 026b
	Zhaka Jack-up Lift System-1		Resp. Dept.	Cont.	026c

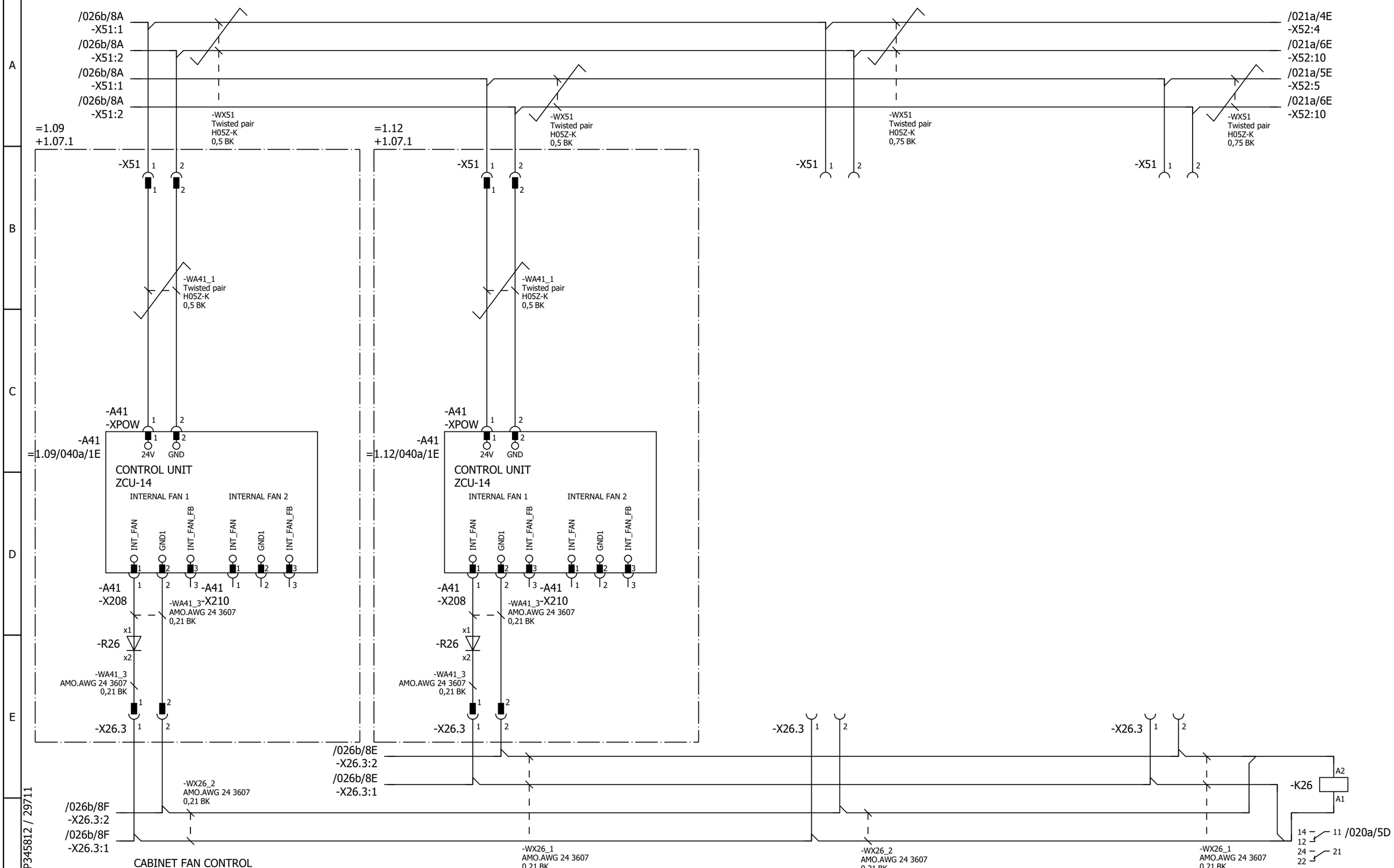

Cust. Doc. No.	Prep. Sky-Xin Zhang 02.08.2023	Title CABINET FAN CONTROL ZCU UPS, 24V FSO, FEA	Circuit diagram EFS2
Cust. Ref. No.	App.	INV1.07	SAP Doc. No.
Customer WMMP	Project Zhaka Jack-up Lift System	ACS880-107-0078A-3	EPLAN Doc. No. 3ABDC230674 - 1.07
	Zhaka Jack-up Lift System-1	400V	ABB Ref. No.
			Resp. Dept.

Item Des. = 1.07 + 1.07.1

Rev. .1 Sheet 026c

Cont. 040a

*) GEN.H05Z-K BK 1,0

Control and status signals	Terminal	Pin
E-STOP FEEDBACK 1 - ESTOP ACTIVE	-XRO1	12
RUNNING 1 - RUNNING	-XRO2	22
FAULT (-1) 1 - NO FAULT	-XRO3	32

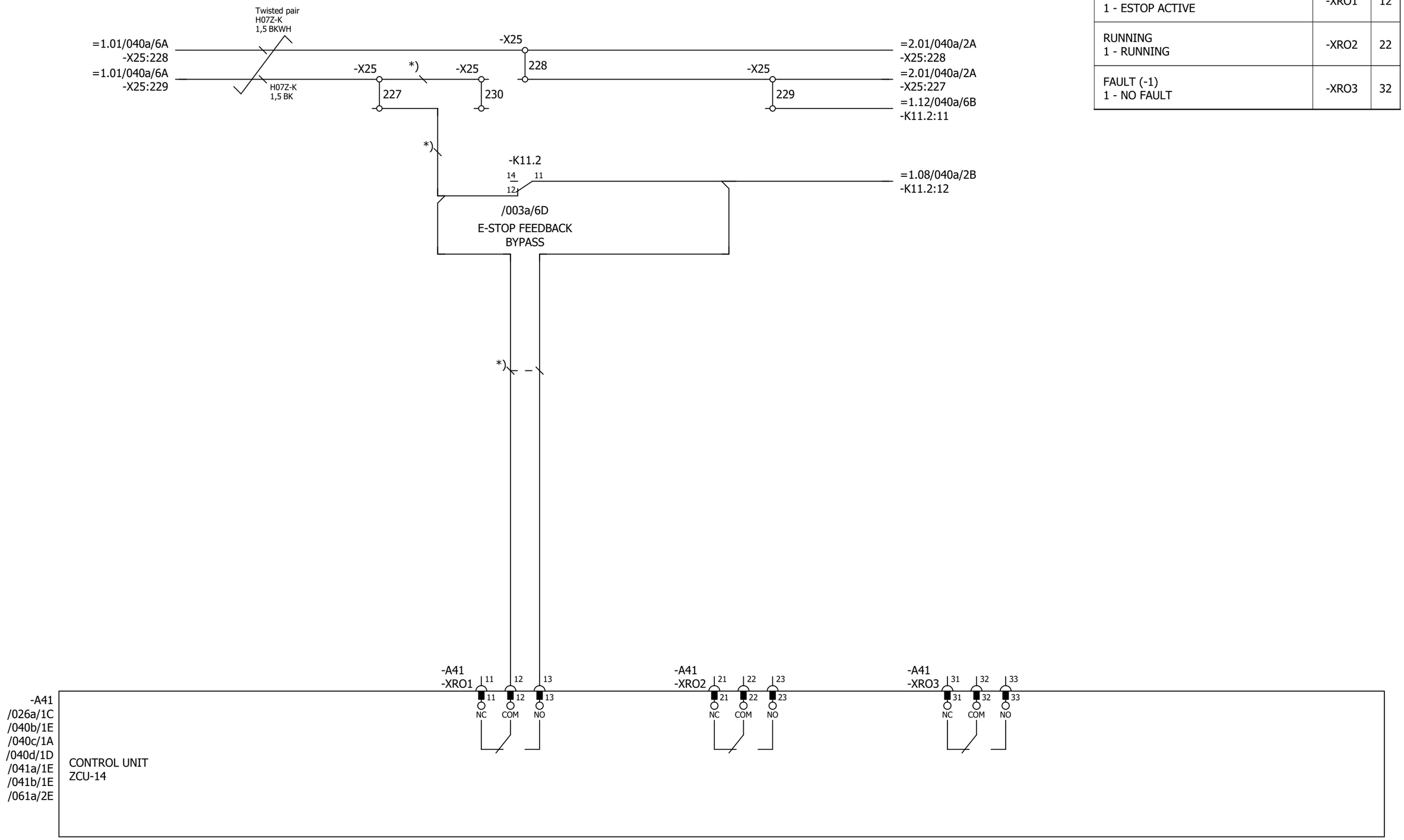

Cust. Doc. No.	Prep. Sky-Xin Zhang 02.08.2023	Title CONTROL BOARD INV1.07 ACS880-107-0078A-3 400V	Circuit diagram EFS2
Cust. Ref. No.	App.		SAP Doc. No.
Customer WMMP	Project Zhaka Jack-up Lift System Zhaka Jack-up Lift System-1		EPLAN Doc. No. 3ABDC230674 - 1.07
			ABB Ref. No.
			Resp. Dept.

Item Des.
= 1.07
+ 1.07.1

Rev. .1 Sheet 040a
Cont. 040b

Control and status signals	Terminal	Pin
DIGITAL INTERLOCK	-XD24	1
START/STOP 1 - START	-XDI	1
FORWARD/REVERSE 1 - REVERSE	-XDI	2
RESET	-XDI	3
EMERGENCY STOP 0 - ACTIVE	-XDI	4
NOT SPECIFIED	-XDI	5
DI6 NOT IN USE	-XDI	6
OUTPUT: READY	-XDIO	1
OUTPUT: RUNNING	-XDIO	2

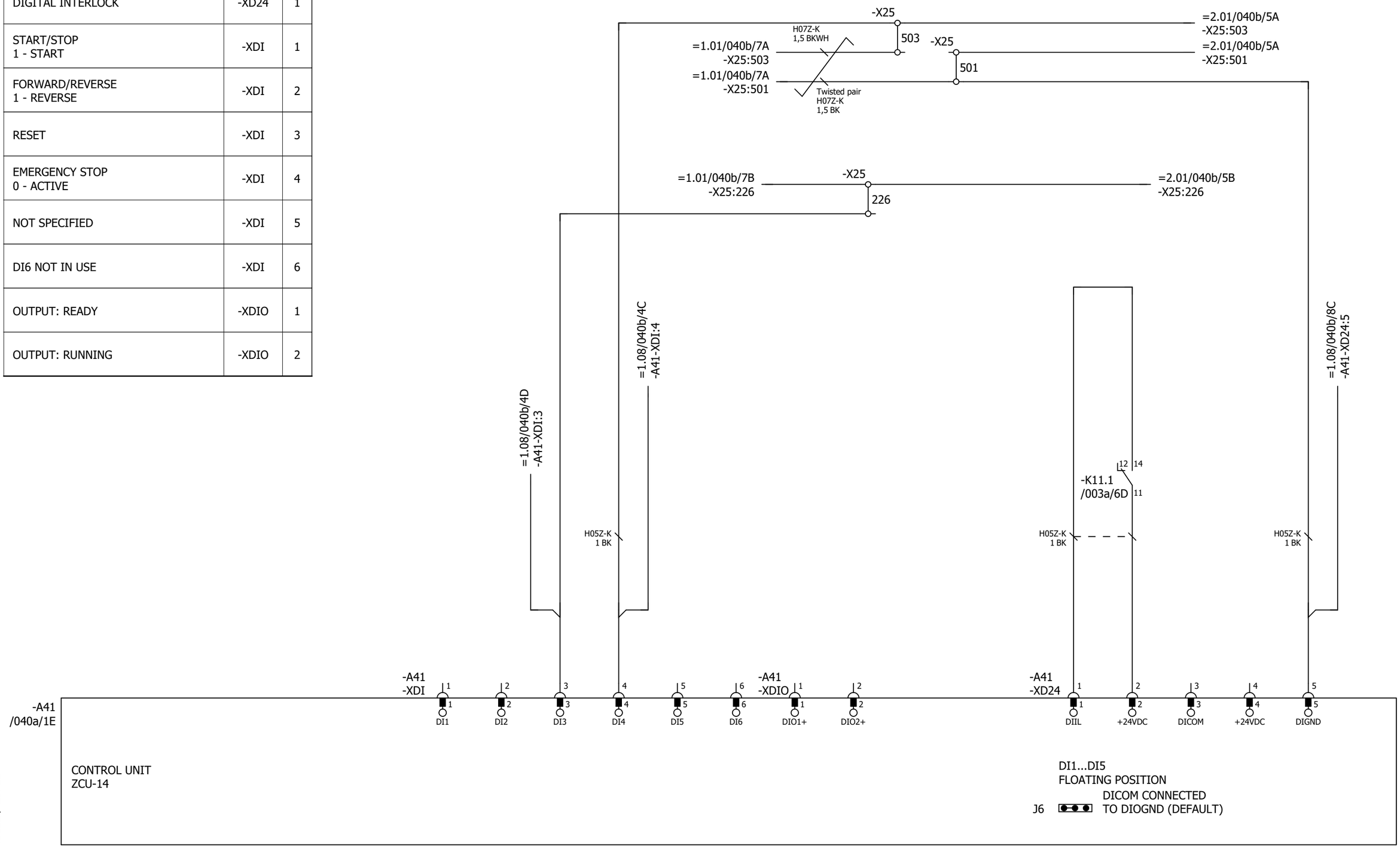

P345812 / 29711

Cust. Doc. No.	Prep. Sky-Xin Zhang 02.08.2023	Title CONTROL BOARD INV1.07 ACS880-107-0078A-3 400V	Circuit diagram EFS2
Cust. Ref. No.	App.		SAP Doc. No.
Customer WMMP	Project Zhaka Jack-up Lift System Zhaka Jack-up Lift System-1		EPLAN Doc. No. 3ABDC230674 - 1.07
			ABB Ref. No.
			Resp. Dept.

Item Des.
= 1.07
+ 1.07.1

Rev. .1 Sheet 040b
Cont. 040c

Control and status signals	Terminal	Pin
MOTOR TEMP. MONITORING 0(2)…10V	-XAI	4
AI2 NOT SPECIFIED BY DEFAULT NOT IN USE 0(4)…20mA	-XAI	6
CURR SOU MOT TEMP MONIT 0(4)...20mA	-XAO	1
CURRENT 0(4)…20mA ↔ 0(4)…MOTOR CURRENT	-XAO	3

P345812 / 29711

Cust. Doc. No.	Prep. Sky-Xin Zhang 02.08.2023	Title CONTROL BOARD INV1.07 ACS880-107-0078A-3 400V	Circuit diagram EFS2
Cust. Ref. No.	App.		SAP Doc. No.
Customer WMMP	Project Zhaka Jack-up Lift System Zhaka Jack-up Lift System-1		EPLAN Doc. No. 3ABDC230674 - 1.07
			ABB Ref. No.
			Resp. Dept.

Item Des.
= 1.07
+ 1.07.1

Rev. .1 Sheet 040c
Cont. 040d

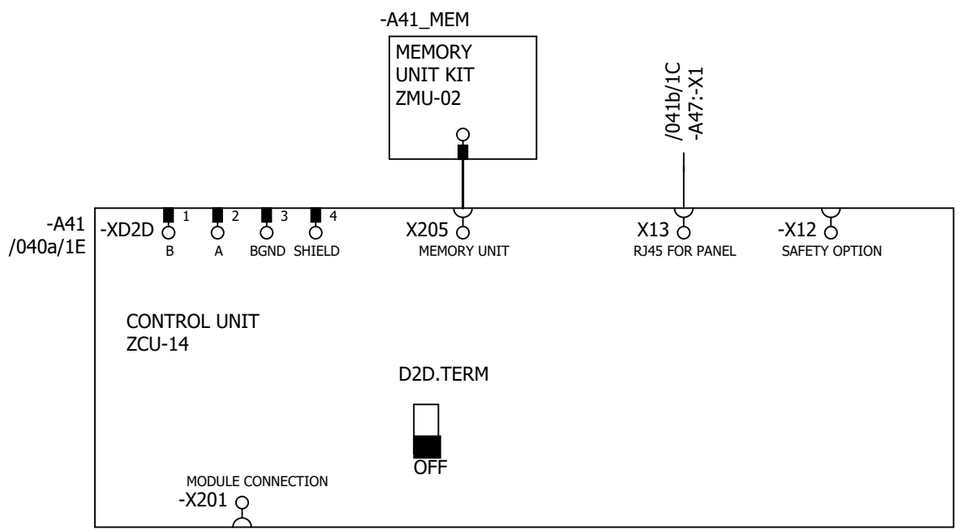

P345812 / 29711

Cust. Doc. No.	Prep. Sky-Xin Zhang 02.08.2023	Title CONTROL BOARD INV1.07 ACS880-107-0078A-3 400V	Circuit diagram EFS2
Cust. Ref. No.	App.		SAP Doc. No.
Customer WMMP	Project Zhaka Jack-up Lift System Zhaka Jack-up Lift System-1		EPLAN Doc. No. 3ABDC230674 - 1.07
			ABB Ref. No.
			Resp. Dept.

Item Des.
= 1.07
+ 1.07.1

Rev. .1 Sheet 040d
Cont. 041a

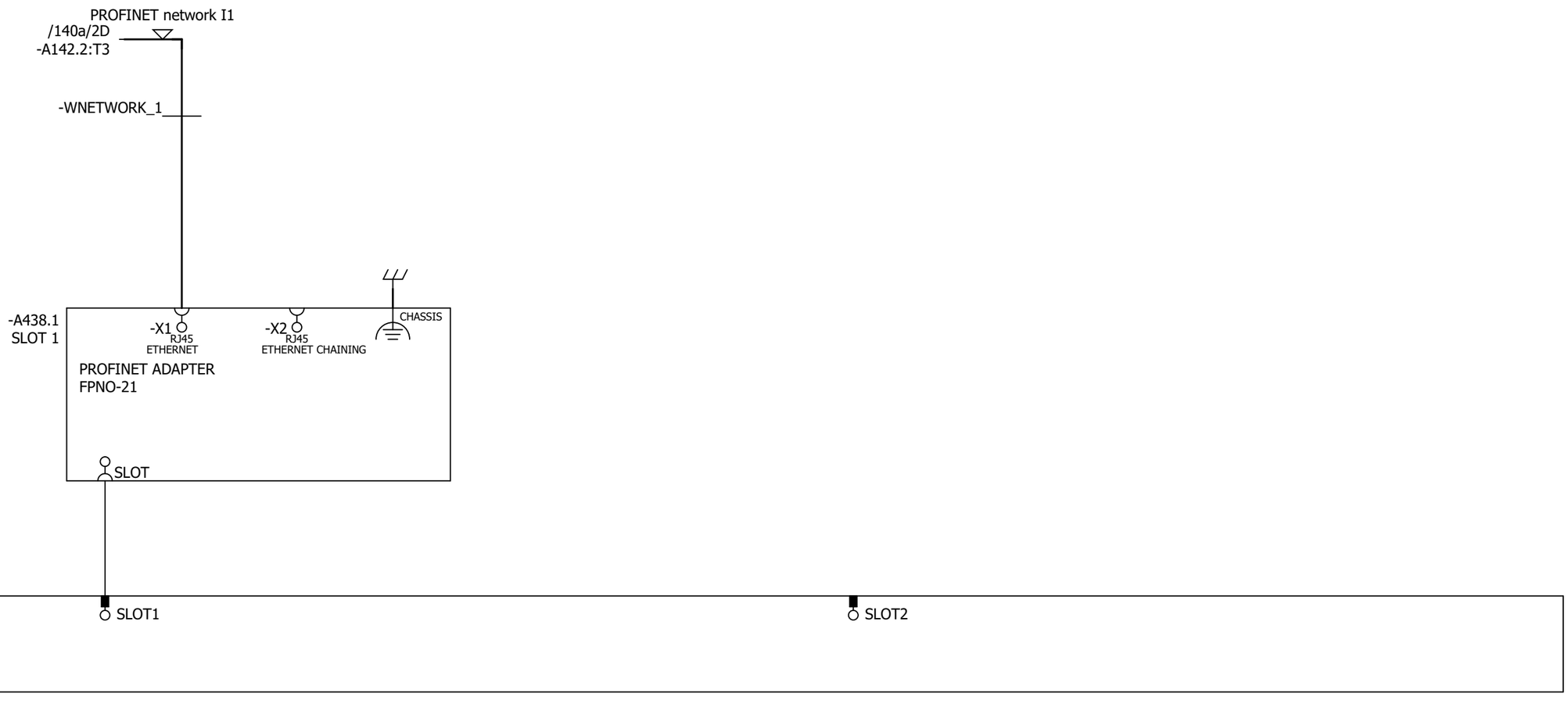

P345812 / 29711

Cust. Doc. No.	Prep. Sky-Xin Zhang 02.08.2023	Title OPTION CARDS	Circuit diagram EFS2
Cust. Ref. No.	App.	INV1.07	SAP Doc. No.
Customer WMMP	Project Zhaka Jack-up Lift System	ACS880-107-0078A-3	EPLAN Doc. No. 3ABDC230674 - 1.07
	Zhaka Jack-up Lift System-1	400V	ABB Ref. No.
			Resp. Dept.

Item Des.
= 1.07
+ 1.07.1

Rev. .1 Sheet 041a
Cont. 041b

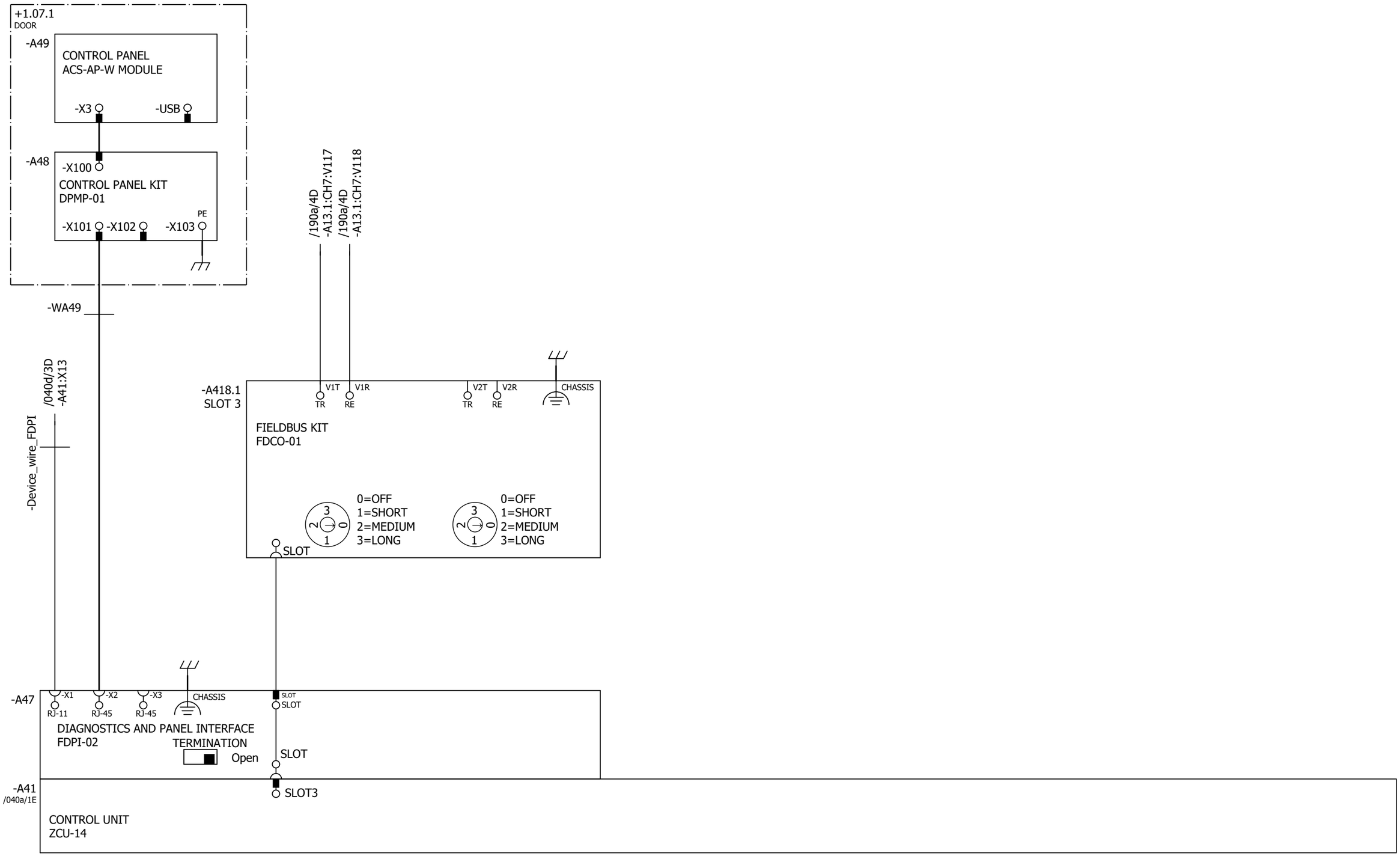

Cust. Doc. No.	Prep. Sky-Xin Zhang 02.08.2023	Title OPTION CARDS	Circuit diagram EFS2	Item Des.
Cust. Ref. No.	App.	INV1.07	SAP Doc. No.	= 1.07
Customer WMMP	Project Zhaka Jack-up Lift System	ACS880-107-0078A-3	EPLAN Doc. No. 3ABDC230674 - 1.07	+ 1.07.1
	Zhaka Jack-up Lift System-1	400V	ABB Ref. No.	Rev. .1 Sheet 041b
			Resp. Dept.	Cont. 061a

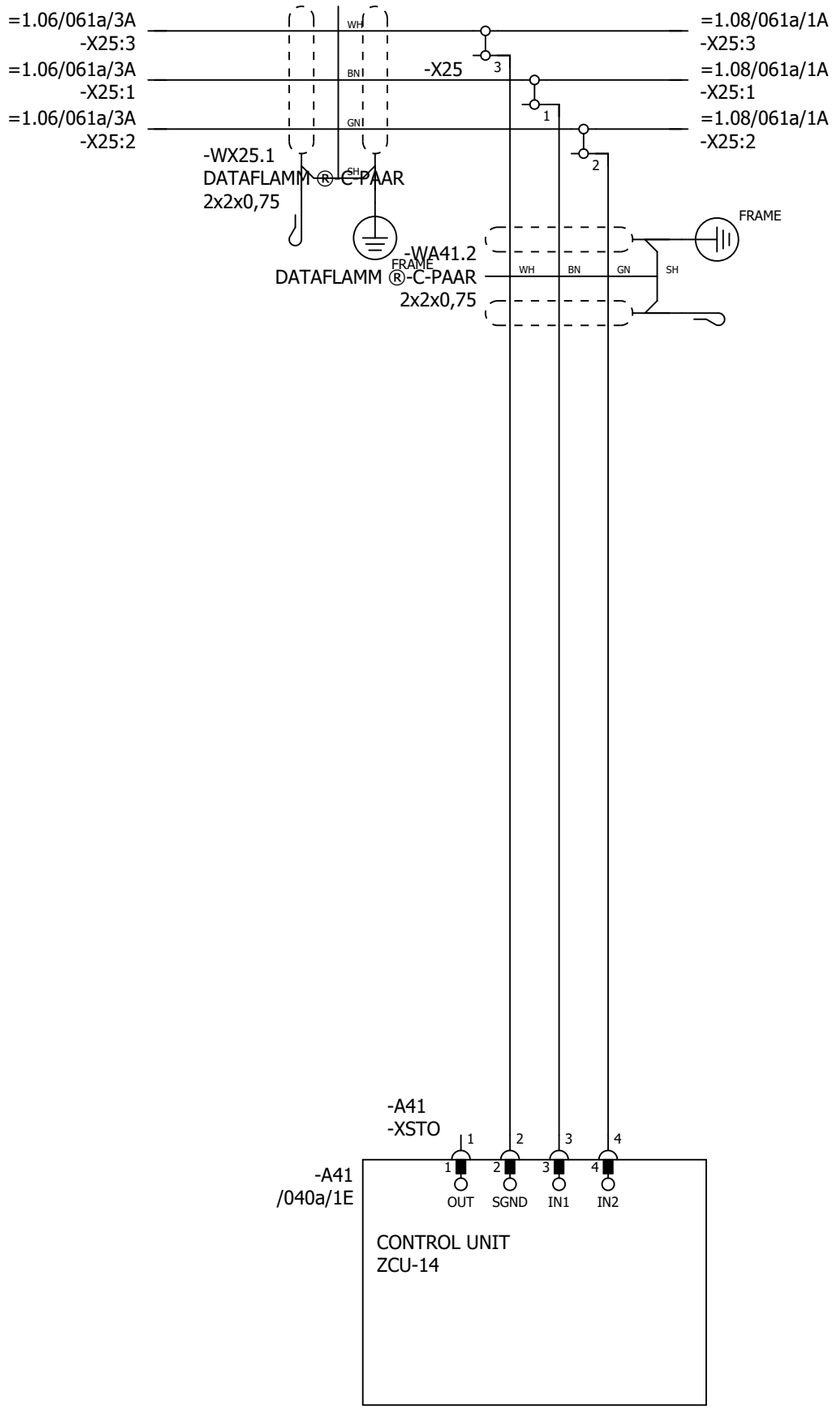

P345812 / 29711

SAFETY CIRCUIT
MACRO REVISION 6
RULES CONVERTED 19.7.2023

Cust. Doc. No.	Prep. Sky-Xin Zhang 02.08.2023	Title SAFETY CIRCUIT INV1.07 ACS880-107-0078A-3 400V	Circuit diagram EFS2
Cust. Ref. No.	App.		SAP Doc. No.
Customer WMMP	Project Zhaka Jack-up Lift System Zhaka Jack-up Lift System-1		EPLAN Doc. No. 3ABDC230674 - 1.07
			ABB Ref. No.
			Resp. Dept.

Item Des.
= 1.07
+ 1.07.1

Rev. .1 Sheet 061a
Cont. 095a

CABINET
HEATING

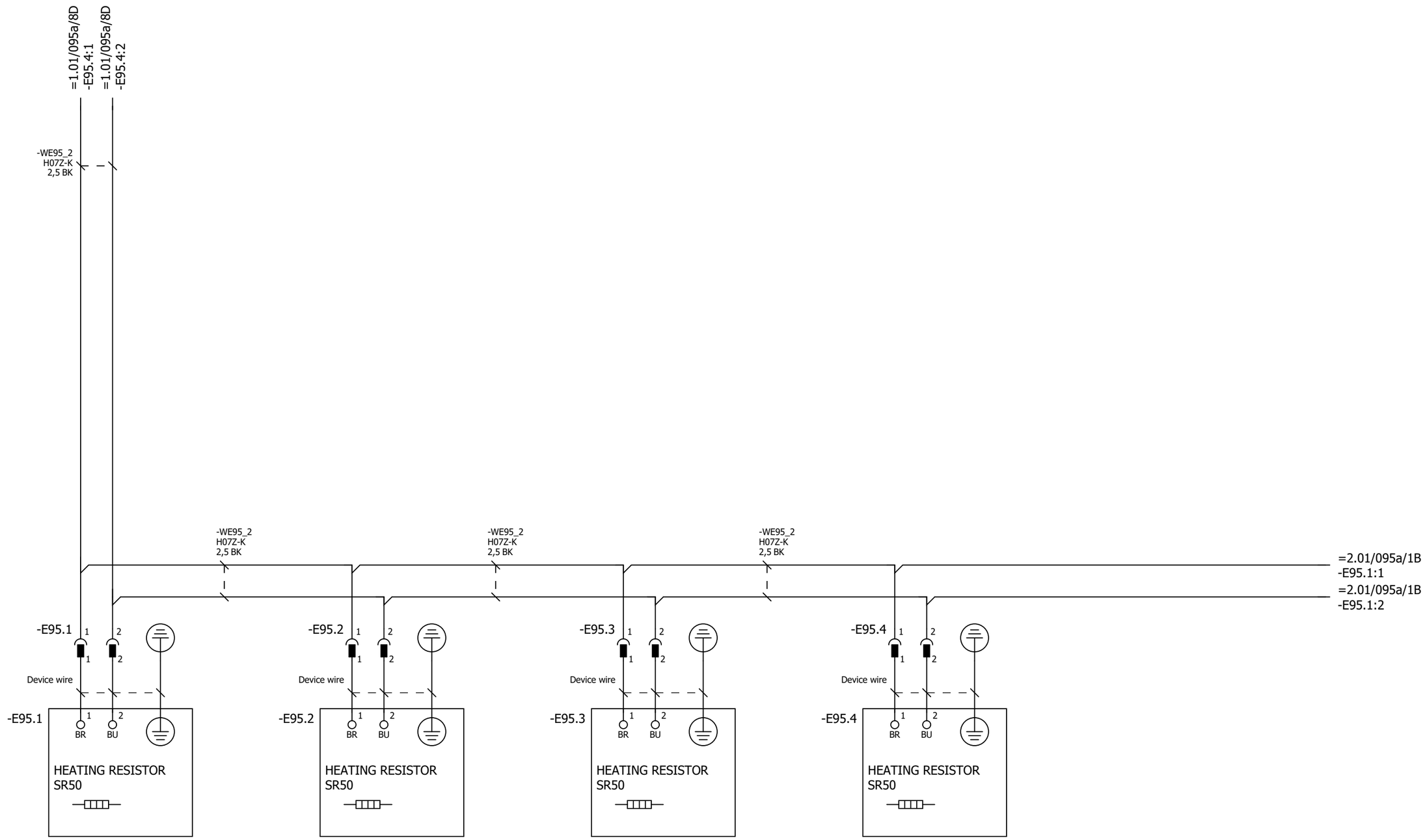

P345812 / 29711

Cust. Doc. No.	Prep. Sky-Xin Zhang 02.08.2023	Title CABINET HEATING	Circuit diagram EFS2	Item Des.	
Cust. Ref. No.	App.	INV1.07	SAP Doc. No.	= 1.07	
Customer WMMP	Project Zhaka Jack-up Lift System	ACS880-107-0078A-3	EPLAN Doc. No. 3ABDC230674 - 1.07	+ 1.07.1	
	Zhaka Jack-up Lift System-1	400V	ABB Ref. No.	Rev. .1	Sheet 095a
			Resp. Dept.	Cont.	140a

SWITCH FOR:
PROFINET network I2

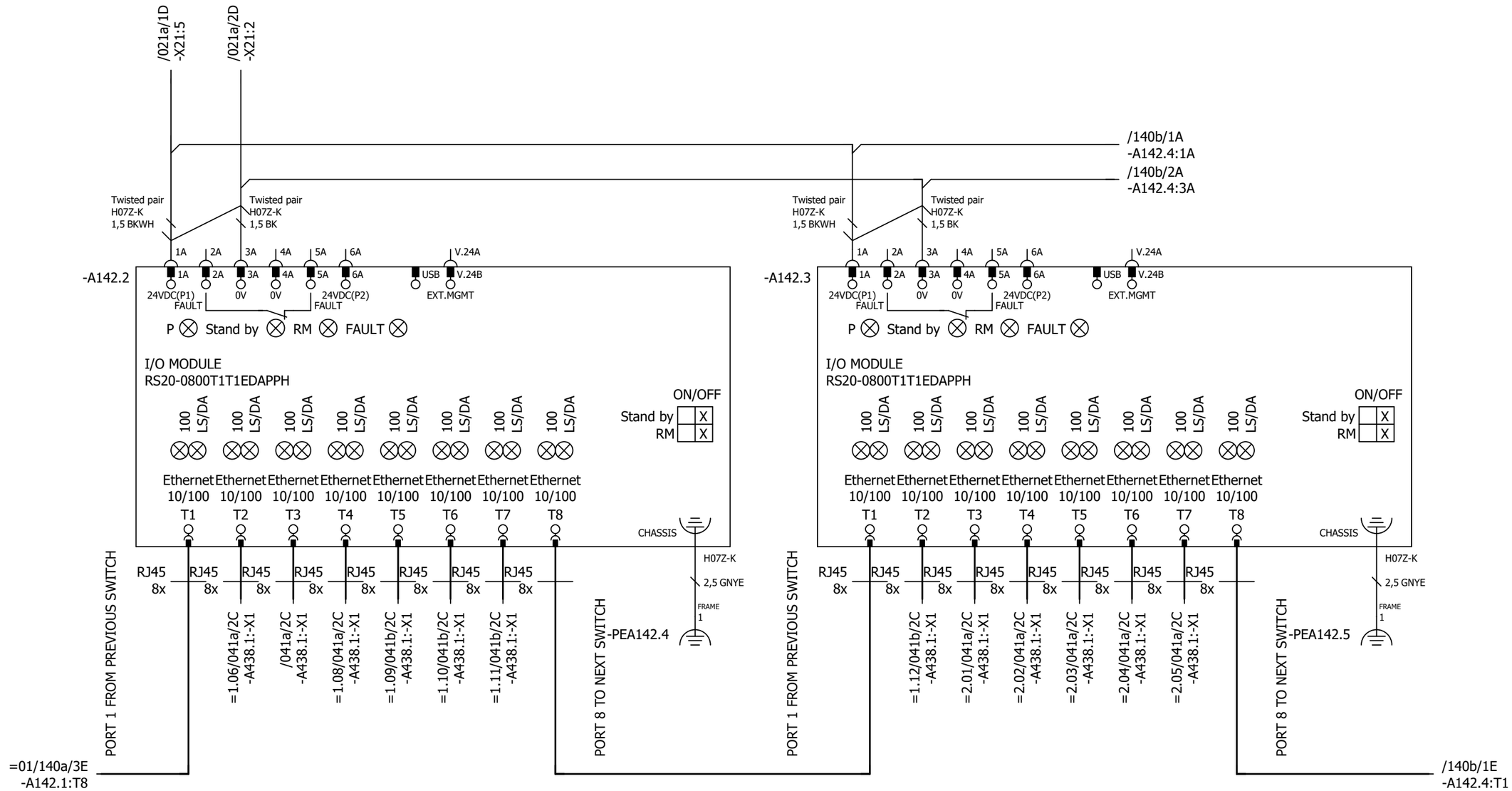

IF SWITCH IS NOT ALLOCATED TO FIRST UNIT IN NETWORK,
CHAIN AND RING TOPOLOGIES ARE NOT GENERATED OPTIMALLY
FROM WIRING PERSPECTIVE. PLEASE CHECK CONNECTIONS.

GENERATED WIRING ORDER, IF SWITCH IS ALLOCATED TO LAST UNIT IN NETWORK:
1) UNIT WITH SWITCH
2) FIRST UNIT IN NETWORK
3) SECOND UNIT IN NETWORK
....
n) UNIT BEFORE SWITCH

NOTE!
INSTALL GREEN PROFINET CABLES IN PROFINET/PROFIsafe NETWORK

P345812 / 29711

Cust. Doc. No.	Prep. Sky-Xin Zhang 02.08.2023	Title OPTION CARDS	Circuit diagram EFS2
Cust. Ref. No.	App.	INV1.07	SAP Doc. No.
Customer WMMP	Project Zhaka Jack-up Lift System	ACS880-107-0078A-3	EPLAN Doc. No. 3ABDC230674 - 1.07
	Zhaka Jack-up Lift System-1	400V	ABB Ref. No.
			Resp. Dept.

Item Des. = 1.07 + 1.07.2
Rev. .1 Sheet 140a
Cont. 140b

SWITCH FOR:
PROFINET network I2

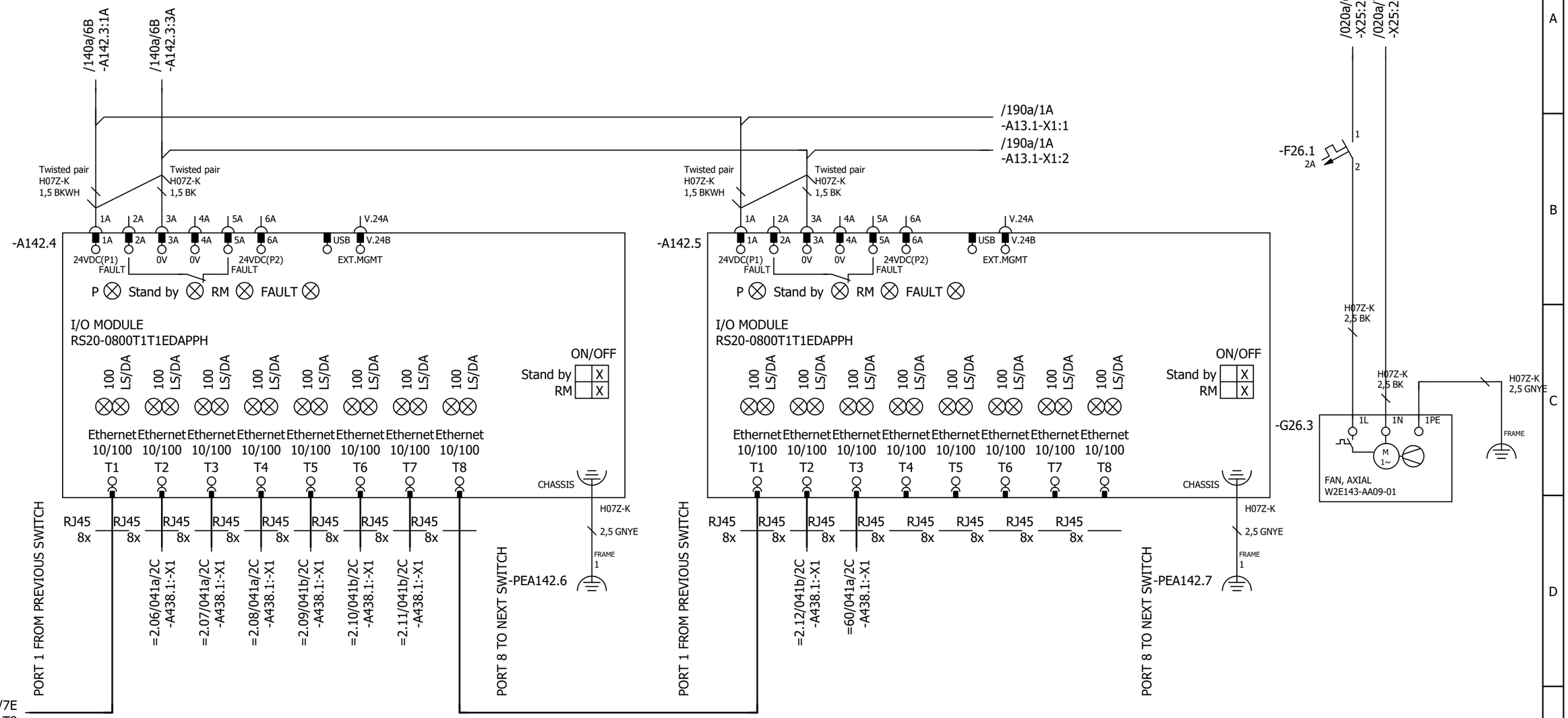

IF SWITCH IS NOT ALLOCATED TO FIRST UNIT IN NETWORK,
CHAIN AND RING TOPOLOGIES ARE NOT GENERATED OPTIMALLY
FROM WIRING PERSPECTIVE. PLEASE CHECK CONNECTIONS.

GENERATED WIRING ORDER, IF SWITCH IS ALLOCATED TO LAST UNIT IN NETWORK:
1) UNIT WITH SWITCH
2) FIRST UNIT IN NETWORK
3) SECOND UNIT IN NETWORK
....
n) UNIT BEFORE SWITCH

NOTE!
INSTALL GREEN PROFINET CABLES IN PROFINET/PROFIsafe NETWORK

P345812 / 29711

Cust. Doc. No.	Prep. Sky-Xin Zhang 02.08.2023	Title OPTION CARDS	Circuit diagram EFS2	Item Des.	
Cust. Ref. No.	App.	INV1.07	SAP Doc. No.	= 1.07	
Customer WMMP	Project Zhaka Jack-up Lift System	ACS880-107-0078A-3	EPLAN Doc. No. 3ABDC230674 - 1.07	+ 1.07.2	
	Zhaka Jack-up Lift System-1	400V	ABB Ref. No.	Rev. .1	Sheet 140b
			Resp. Dept.	Cont.	190a

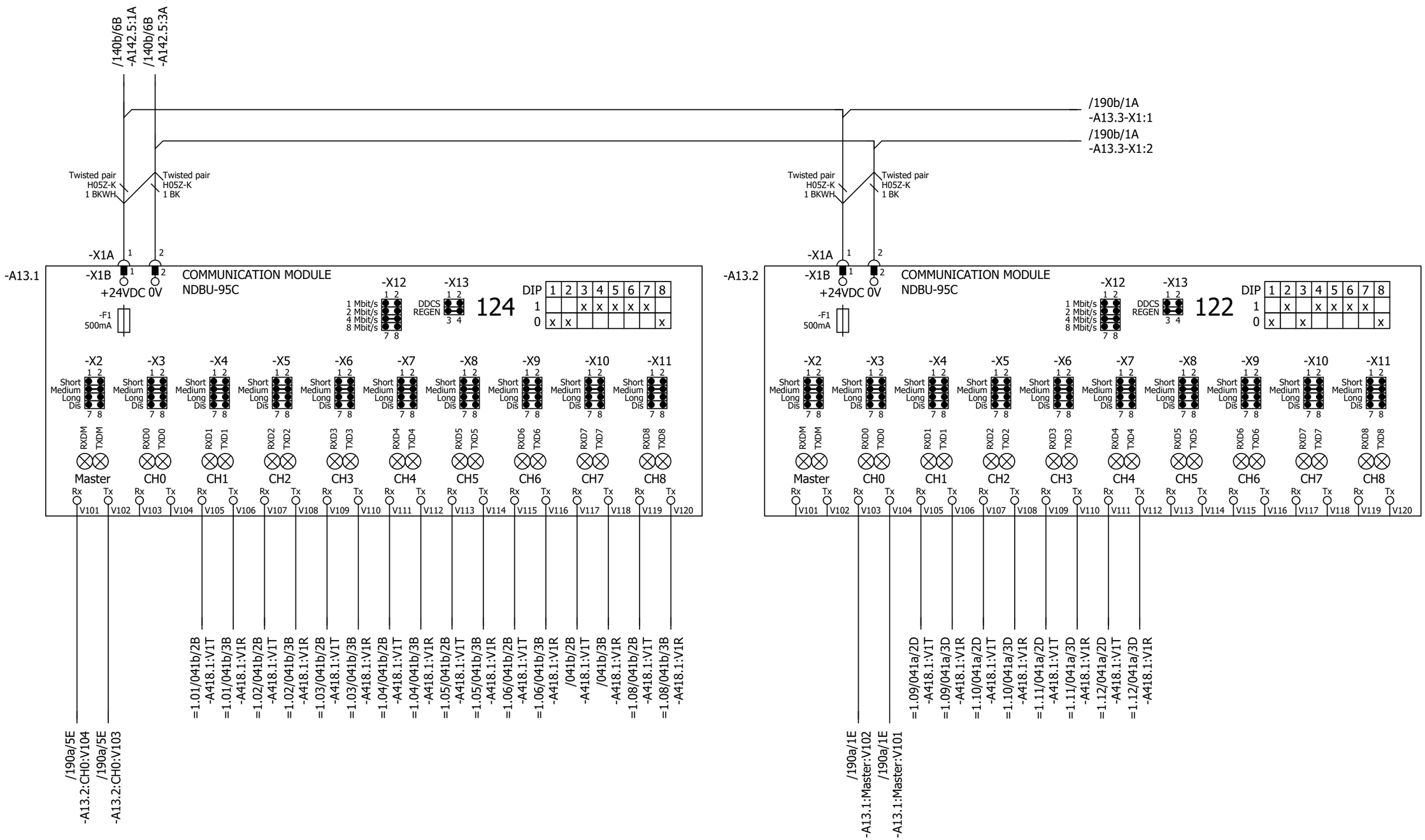

Cust. Doc. No.	Prep. Sky-Xin Zhang 02.08.2023	Title DDCS BRANCHING UNIT	Circuit diagram EFS2
Cust. Ref. No.	App.	INV1.07	SAP Doc. No.
Customer WMMP	Project Zhaka Jack-up Lift System	ACS880-107-0078A-3	EPLAN Doc. No. 3ABDC230674 - 1.07
	Zhaka Jack-up Lift System-1	400V	ABB Ref. No.
			Resp. Dept.

Item Des. = 1.07 + 1.07.2

Rev. .1 Sheet 190a

Cont. 190b

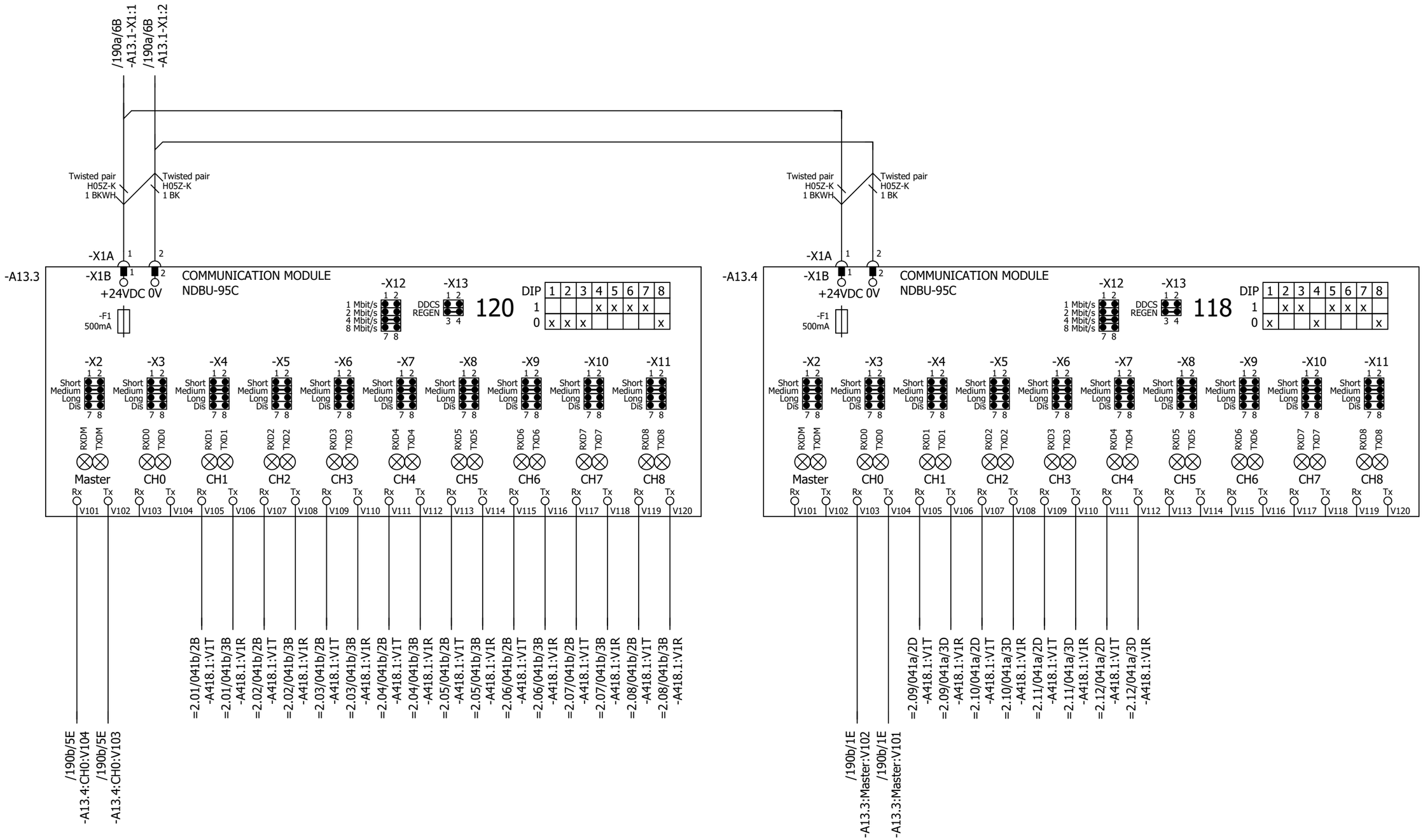

P345812 / 29711

Cust. Doc. No.	Prep. Sky-Xin Zhang 02.08.2023	Title DDCS BRANCHING UNIT	Circuit diagram EFS2
Cust. Ref. No.	App.	INV1.07	SAP Doc. No.
Customer WMMP	Project Zhaka Jack-up Lift System	ACS880-107-0078A-3	EPLAN Doc. No. 3ABDC230674 - 1.07
	Zhaka Jack-up Lift System-1	400V	ABB Ref. No.
			Resp. Dept.

Item Des. = 1.07 + 1.07.2

Rev. .1 Sheet 190b

Cont. &MPC/Part list_1

Part list: 3ABDC230674DU01007

Item	Sort String	Qty.Str	Unit	Component Number	Description and text	Technical data
0010		1.000	ST		ACS880-107-0078A-3+A012+B053+C121+C132+	
0020		1.000	ST		_C206+E210+F272+F287+F288+G300+G307+G315	
0030		1.000	ST		_+G320+G330+G344+H352+H367+J400+K492+L50	
0040		1.000	ST		_3+P913+Q964	
0050		1.000	ST		=1.07	
0060		1.000	ST		+1.07.1,INU3	
0070		1.000	ST		Powerconversionequipment	
0080	-A41_MEM	1.000	PC	3AXD50000006010	MEMORY UNIT KIT ZMU-02	
0090	-T11	1.000	PC	3AUA0000120009-M	ACS880-104-0078A-3+P922	+P922
0100	SCREW	1.000	PC	3AFE68681481	SCREW K30X10 TORX	PT WN1452 ZN
0110	SOFTWARE	1.000	PC	3AUA0000153462	SOFTWARE PRIMARY CONTROL PROGRA	AINF6 FOR ZCU-12/14
0120		1.000	ST		R4imoduleDCfuse	
0130	-F11.1-2	2.000	PC	3AXD50000000219	FUSE FR27UQ69V160T/160A	6.921 CP URQ 27X60MM FERRULE;AR
0140		1.000	ST		R3i-R4imoduleDCfusebase	
0150	(-F11.1-2)	2.000	PC	3AUA0000089227	FUSE HOLDER FUSE BASE US271MI 150A	FUSE BASE US271MI 150A 800V
0160		1.000	ST		motorterminalR4i,coppercable	
0170	-X1	1.000	PC	3ABD50000000270	CONNECTOR PPAC-50	50 MM2;150 A;800V
0180	-X1	1.000	PC	3ABD50000000270	CONNECTOR PPAC-50	50 MM2;150 A;800V
0190	-X1	1.000	PC	3ABD50000000270	CONNECTOR PPAC-50	50 MM2;150 A;800V
0200		1.000	ST		24VDCsupplyZCU	
0210	-WA41_1	1.000	PC	3AXD50000005218	WIRE HARNESS 24VDC SUPPLY X51 ZCU V	HALOGEN FREE;X51_A51
0220		1.000	ST		Rooffancontrol	
0230	-WA41_3	1.000	PC	3AXD50000002688	WIRE HARNESS FAN CONTROL MAIN WIRE	HALOGEN FREE;X208_X26.3
0240		1.000	ST		Toprowmodulewireharness	
0250	-WT11	1.000	PC	3AXD50000002256	WIRE HARNESS R4I FUSE_MODULE V2	HALOGEN FREE;MAIN CIRCUIT WIRE SET
0260	-WX1	1.000	PC	3AXD50000002258	WIRE HARNESS R4I MODULE_OUTPUT TR V	HALOGEN FREE;MAIN CIRCUIT WIRE SET
0270		1.000	ST		Optionmodule	
0280	-A418.1	1.000	PC	3AUA0000107392	COMMUNIC. ADAPTER FDCO-01	
0290		1.000	ST		Controlpanel	
0300	-A47	1.000	PC	3AUA0000108650	FIELDBUS KIT FDPI-02	PANEL BUS ADAPTER
0310	-A48	1.000	PC	3AUA0000108878	CONTROL PANEL KIT DPMP-01	DPMP-01
0320	-A49	1.000	PC	3AXD50000025964	CONTROL PANEL ACS-AP-W MODULE	ASSISTANT PANEL WIRELESS CPU1
0330		1.000	ST		DCfusesupervision	

P345812 / 29711

Cust. Doc. No.	Prep.	Title PART LIST INV1.07 ACS880-107-0078A-3 400V	Item Des. = 1.07 +
Cust. Ref. No.	App.		SAP Doc. No.
Customer WMMP	Project Zhaka Jack-up Lift System Zhaka Jack-up Lift System-1		EPLAN Doc. No. 3ABDC230674 - 1.07
			ABB Ref. No. / Rev. / Sheet Part list_1
			Resp. Dept. / Cont. Part list_2

Part list: 3ABDC230674DU01007

Item	Sort String	Qty.Str	Unit	Component Number	Description and text	Technical data
0340	-K11.1-2	2.000	PC	3AXD50000021313	RELAY DEK_REL_G24/21	250 V;6 A;COIL 24VDC
0350	-WK11	1.000	PC	3AXD50000003220	WIRE HARNESS 6 MODULE 800MM CABINET	HALOGEN FREE;DC FUSE SUPERVISION
0360	-WK11	1.000	PC	3AXD50000003227	WIRE HARNESS 1ST MODULE SUPERV 800M	HALOGEN FREE;DC FUSE SUPERVISION
0370	-WK11	1.000	PC	3AXD50000003228	WIRE HARNESS 2ND MODULE SUPERV 800M	HALOGEN FREE;DC FUSE SUPERVISION
0380	-WK11	1.000	PC	3AXD50000003229	WIRE HARNESS 3RD MODULE SUPERV 800M	HALOGEN FREE;DC FUSE SUPERVISION
0390	-WK11	1.000	PC	3AXD50000003230	WIRE HARNESS 4TH MODULE SUPERV 800M	HALOGEN FREE;DC FUSE SUPERVISION
0400	-WK11	1.000	PC	3AXD50000003231	WIRE HARNESS 5TH MODULE SUPERV 800M	HALOGEN FREE;DC FUSE SUPERVISION
0410	-WK11	1.000	PC	3AXD50000003232	WIRE HARNESS 6TH MODULE SUPERV 800M	HALOGEN FREE;DC FUSE SUPERVISION
0420		1.000	ST		FieldBus	
0430	-A438.1	1.000	PC	3AXD50000192779	OPTION MODULE FPNO-21	PROFINET IO
0440		1.000	ST		Supplementtorelay	
0450	(-K11.1)	1.000	PC	3AXD50000021312	TERMINAL BLOCK ST EB2_DIK_RD 2716693	2POLE, 6,15 MM PITCH;FOR DEK RELAYS
0460		1.000	ST		CommonDCfuse	
0470	-F10.1-2	2.000	PC	3AXD50000000246	FUSE 170M4416	630 A;690 V;DIN1 FLUSH END;AR;200KA
0480	-F10.3-4	2.000	PC	3AXD50000000234	FUSE 170M4410	315 A;690 V;DIN1 FLUSH END;AR;200KA
0490		1.000	ST		Cabinetfan	
0500	-F26	1.000	PC	3AFE68264758	PROTECTION SWITCH S 201-K4	4A, 440VAC/60VDC
0510	-G26.1	1.000	PC	3AXD50000000592	FAN R3G225-RH17-23	230V;96W;50HZ;60HZ;0,77A;1080M3S CCC,UL
0520	-G26.2	1.000	PC	3AXD50000000592	FAN R3G225-RH17-23	230V;96W;50HZ;60HZ;0,77A;1080M3S CCC,UL
0530	-K26	1.000	PC	3AUA0000102191	RELAY RCL425024-SOCKET-DIODE	8 A;24 V;24VDC, 2C/O
0540	-X26.1	1.000	PC	3AXD50000000723	TERMINAL BLOCK AS X26 FAN SUPPLY PLUG	12,00 AWG;2,50 mm2;24,00 A;500,00 V
0550	(-X26.1)	1.000	PC	3AXD50000000724	TERMINAL BLOCK AS X26 FAN SUPPLY SOCKET	12,00 AWG;2,50 mm2;24,00 A;500,00 V
0560	-X26.2	1.000	PC	3AXD50000000723	TERMINAL BLOCK AS X26 FAN SUPPLY PLUG	12,00 AWG;2,50 mm2;24,00 A;500,00 V
0570	(-X26.2)	1.000	PC	3AXD50000000724	TERMINAL BLOCK AS X26 FAN SUPPLY SOCKET	12,00 AWG;2,50 mm2;24,00 A;500,00 V
0580		1.000	ST		Auxvoltagedistribution	
0590	-X22	1.000	PC	3AXD50000001632	TERMINAL BLOCK AS X22	12 AWG;2 mm2;24 A;800 V
0600	-X25	1.000	PC	3AXD50000001609	TERMINAL BLOCK AS X25 (1)	6 AWG;10 mm2;57 A;800 V
0610	-X25	1.000	PC	3ABD00609550	ASSEMBLY PLATE FOR X25 TERMINAL	acs880
0620		1.000	ST		EMSTOPterminalblock	
0630	-X25	1.000	PC	3AXD50000001610	TERMINAL BLOCK AS X25 (2)	12 AWG;2 mm2;24 A;500 V
0640		1.000	ST		STOterminalblock	
0650	-X25	1.000	PC	3AXD50000001631	TERMINAL BLOCK AS X60	12 AWG;2 mm2;24 A;500 V
0660		1.000	ST		24vDCdistributionwithUPS	

P345812 / 29711

Cust. Doc. No.	Prep.	Title PART LIST INV1.07 ACS880-107-0078A-3 400V	Item Des. = 1.07 +
Cust. Ref. No.	App.		SAP Doc. No.
Customer WMMP	Project Zhaka Jack-up Lift System Zhaka Jack-up Lift System-1		EPLAN Doc. No. 3ABDC230674 - 1.07
			ABB Ref. No. / Rev. / Sheet Part list_2
			Resp. Dept. / Cont. Part list_3

Part list: 3ABDC230674DU01007

Item	Sort String	Qty.Str	Unit	Component Number	Description and text	Technical data
0670	-F21	1.000	PC	3AFE68264766	PROTECTION SWITCH S 201-K6	S 201-K6
0680		1.000	ST		24VDCsupply	
0690	-WX51	1.000	PC	3AXD50000005214	WIRE HARNESS 24VDC SUPPLY 800MM V2	HALOGEN FREE;X52_X51
0700		1.000	ST		Cabinetrooffansupply	
0710	-WG26	1.000	PC	3AXD50000036922	WIRE HARNESS CABINET ROOF FAN SUPPL	R1I-R4I 800/1000MM
0720		1.000	ST		Cabinetrooffancontrol	
0730	-WX26_1	1.000	PC	3AXD50000005080	WIRE HARNESS 800MM CABINET LOWER RO	HALOGEN FREE;X26.3_X26.4
0740	-WX26_2	1.000	PC	3AXD50000005078	WIRE HARNESS 800MM CABINET UPPER RO	HALOGEN FREE;X26.3_K26
0750		1.000	ST		24VDCdistribution	
0760	-F52.1-5	5.000	PC	3AXD50000005465	FUSE MDL-7-R	7 A;250 V;¼" x 1¼";GLASS TUBE;TIME-DELAY
0770	-T22	1.000	PC	3ABD00010542	POWER SUPPLY NDR-120-24	24V 5A
0780	-X21	1.000	PC	3AXD50000001633	TERMINAL BLOCK AS X21	12 AWG;2 mm2;24 A;800 V
0790	-X52	1.000	PC	3AXD50000005221	TERMINAL BLOCK AS 24VDC X52 TERM BLOCK 5	10 AWG;4 mm2;10 A;500 V;fuse size 6,3x32
0800		1.000	ST		24vDCdistribution	
0810	-T51	1.000	PC	3ABD00010602	POWER SUPPLY NDR-240-24	24V 10A
0820	-T52	1.000	PC	3ABD00010602	POWER SUPPLY NDR-240-24	24V 10A
0830		1.000	ST		Cabinetheaters	
0840	-E95.1-4	4.000	PC	3AFE09827498	HEATING EQUIPMENT SR50	HEATER 50W/220V(110-270VACDC)
0850	(-E95.1-4)	4.000	PC	3AXD50000010133	ASSEMBLY PLATE HEATER	STEEL HDG 1,0;DEGREAS CLEAN
0860	(-E95.1-4)	1.000	PC	3AXD50000010509	ASSEMBLY DRAWING HEATER 50 AND 100W	
0870	X95.1A-4A	4.000	PC	3AXD50000007033	CONNECTOR SC 2,5/ 2	2,50 mm2;24 A;500 V;2-POS. MALE
0880	X95.1B-4B	4.000	PC	3AUA0000066694	CONNECTOR SSL2.5 3043815	LOCKING ELEMENTS FOR ST-COMBI CONNECTOR
0890		1.000	ST		Supplementforrelay	
0900	(-K11)	2.000	PC	3AXD50000021311	CONNECTOR EB 10-DIK RD 2716774	10POLE, 6,15 MM PITCH;FOR DEK RELAYS
0910	(-K11)	1.000	PC	3AXD50000021314	RELAY D-DEK_1,5_GN	end plate

P345812 / 29711

Cust. Doc. No.	Prep.	Title PART LIST INV1.07 ACS880-107-0078A-3 400V	Item Des. = 1.07 +
Cust. Ref. No.	App.		SAP Doc. No.
Customer WMMP	Project Zhaka Jack-up Lift System Zhaka Jack-up Lift System-1		EPLAN Doc. No. 3ABDC230674 - 1.07
			ABB Ref. No. / Rev. / Sheet Part list_3
			Resp. Dept. / Cont. &EMA/1

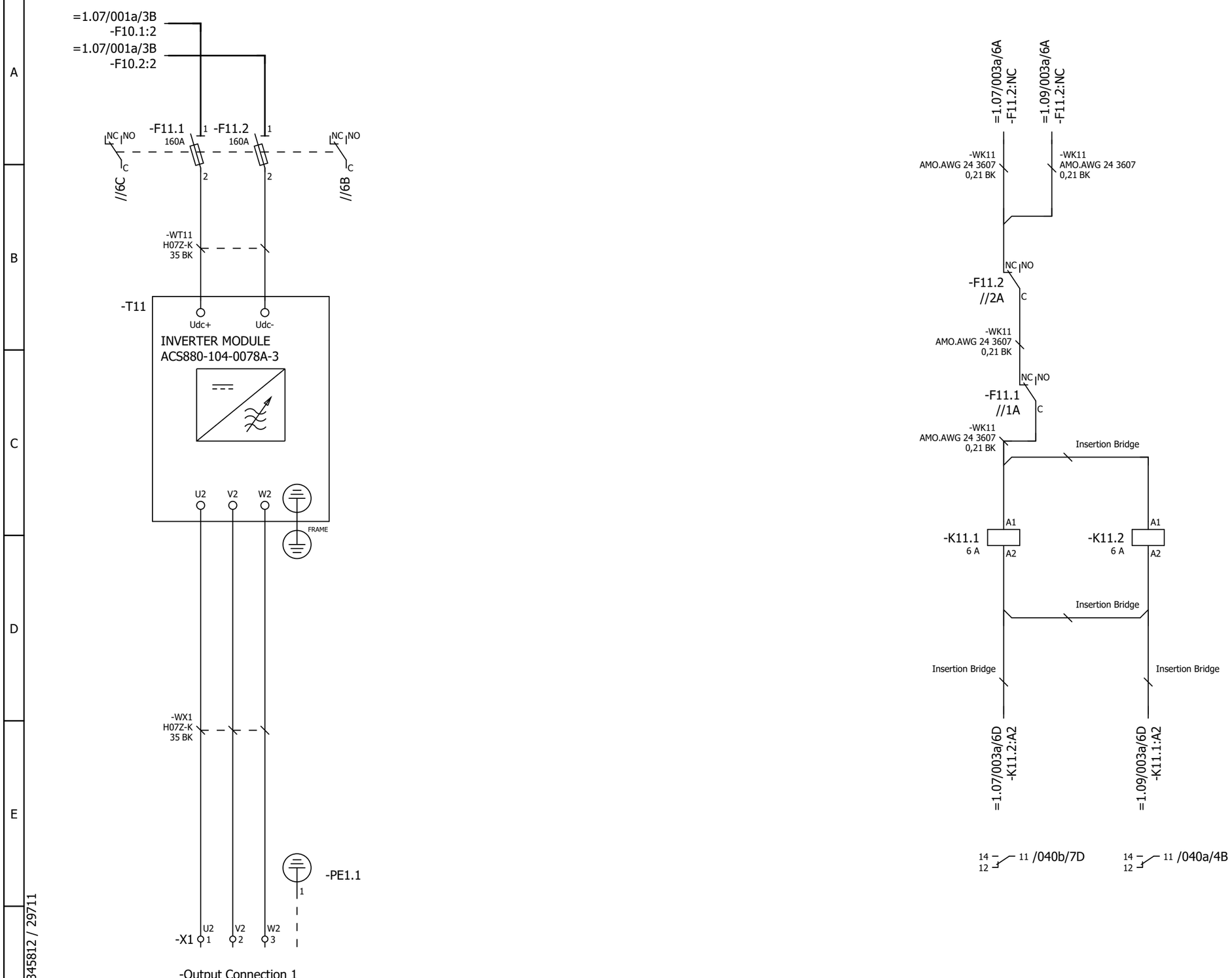

P345812 / 29711

Cust. Doc. No.	Prep. Sky-Xin Zhang 02.08.2023	Title MAIN CIRCUIT	Circuit diagram EFS2
Cust. Ref. No.	App.	INV1.08	SAP Doc. No.
Customer WMMP	Project Zhaka Jack-up Lift System	ACS880-107-0078A-3	EPLAN Doc. No. 3ABDC230674 - 1.08
	Zhaka Jack-up Lift System-1	400V	ABB Ref. No.
			Resp. Dept.

Item Des.	= 1.08 + 1.07.1
Rev. .1	Sheet 003a
Cont.	040a

Control and status signals	Terminal	Pin
E-STOP FEEDBACK 1 - ESTOP ACTIVE	-XRO1	12
RUNNING 1 - RUNNING	-XRO2	22
FAULT (-1) 1 - NO FAULT	-XRO3	32

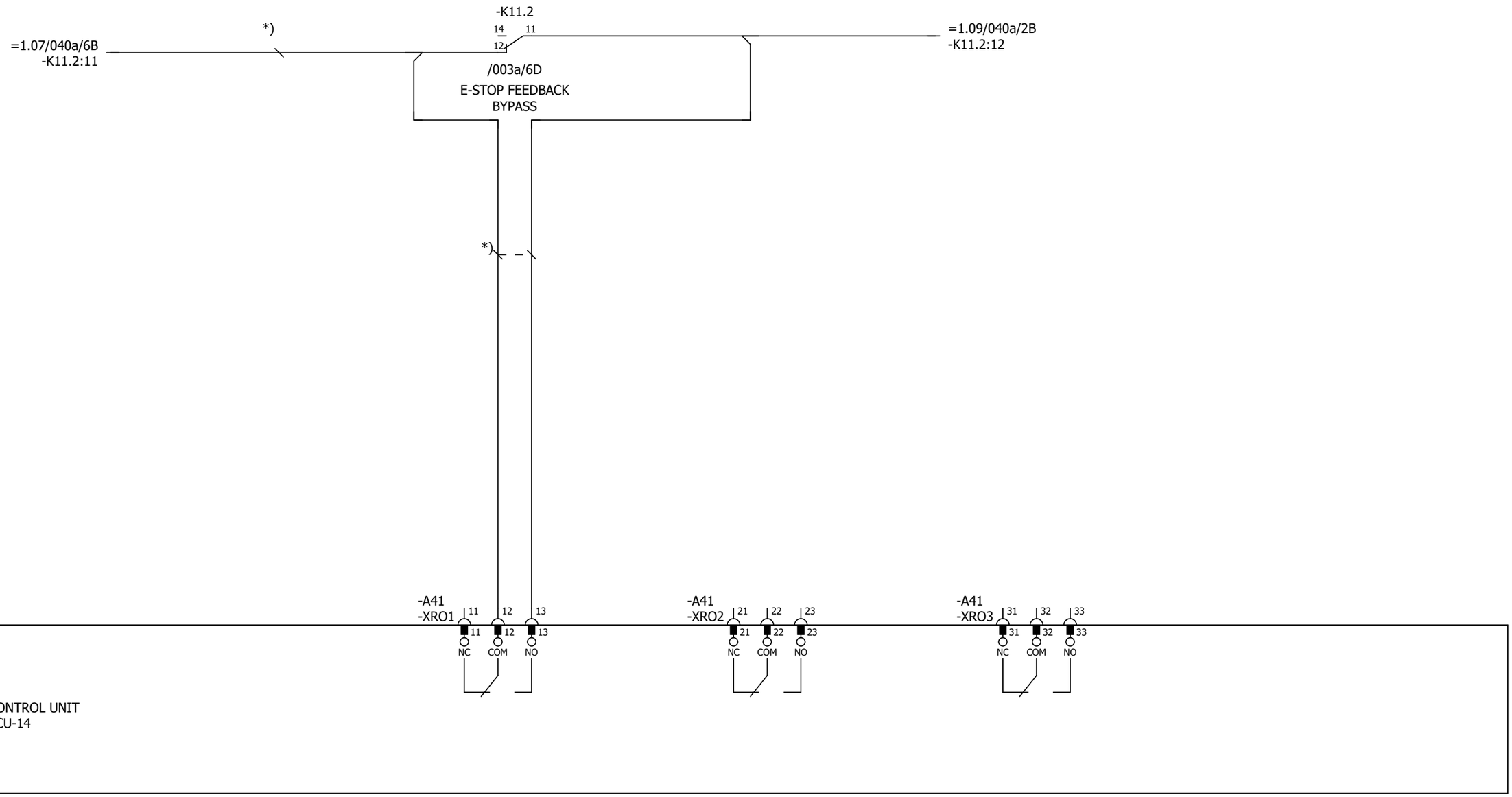

Cust. Doc. No.	Prep. Sky-Xin Zhang 02.08.2023	Title CONTROL BOARD INV1.08 ACS880-107-0078A-3 400V	Circuit diagram EFS2
Cust. Ref. No.	App.		SAP Doc. No.
Customer WMMP	Project Zhaka Jack-up Lift System Zhaka Jack-up Lift System-1		EPLAN Doc. No. 3ABDC230674 - 1.08
			ABB Ref. No.
			Resp. Dept.

Item Des.
= 1.08
+ 1.07.1

Rev. .1 Sheet 040a
Cont. 040b

Control and status signals	Terminal	Pin
DIGITAL INTERLOCK	-XD24	1
START/STOP 1 - START	-XDI	1
FORWARD/REVERSE 1 - REVERSE	-XDI	2
RESET	-XDI	3
EMERGENCY STOP 0 - ACTIVE	-XDI	4
NOT SPECIFIED	-XDI	5
DI6 NOT IN USE	-XDI	6
OUTPUT: READY	-XDIO	1
OUTPUT: RUNNING	-XDIO	2

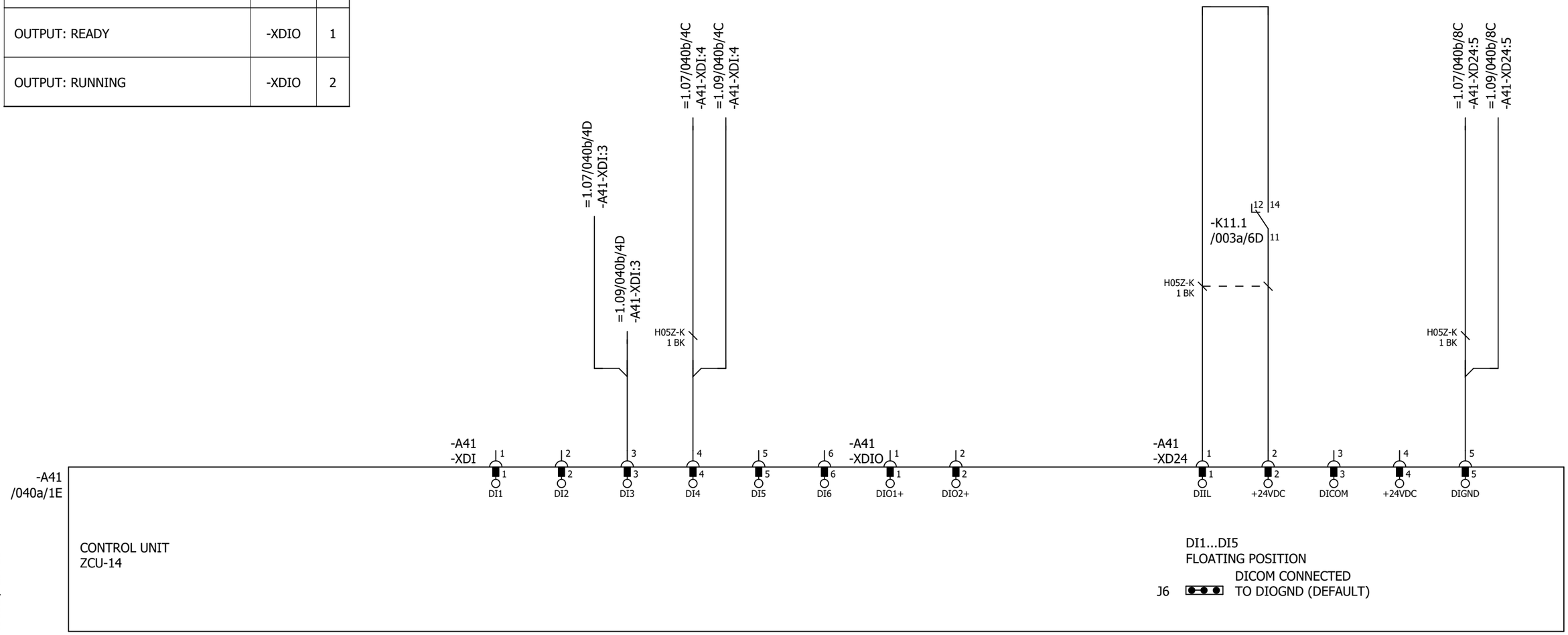

Cust. Doc. No.	Prep. Sky-Xin Zhang 02.08.2023	Title CONTROL BOARD INV1.08 ACS880-107-0078A-3 400V	Circuit diagram EFS2	Item Des.	
Cust. Ref. No.	App.		SAP Doc. No.	= 1.08 + 1.07.1	
Customer WMMP	Project Zhaka Jack-up Lift System Zhaka Jack-up Lift System-1	ABB	EPLAN Doc. No. 3ABDC230674 - 1.08		
			ABB Ref. No.	Rev. .1	Sheet 040b
			Resp. Dept.	Cont.	040c

Control and status signals	Terminal	Pin
MOTOR TEMP. MONITORING 0(2)…10V	-XAI	4
AI2 NOT SPECIFIED BY DEFAULT NOT IN USE 0(4)…20mA	-XAI	6
CURR SOU MOT TEMP MONIT 0(4)...20mA	-XAO	1
CURRENT 0(4)…20mA ↔ 0(4)…MOTOR CURRENT	-XAO	3

P345812 / 29711

Cust. Doc. No.	Prep. Sky-Xin Zhang 02.08.2023	Title CONTROL BOARD INV1.08 ACS880-107-0078A-3 400V	Circuit diagram EFS2
Cust. Ref. No.	App.		SAP Doc. No.
Customer WMMP	Project Zhaka Jack-up Lift System Zhaka Jack-up Lift System-1		EPLAN Doc. No. 3ABDC230674 - 1.08
			ABB Ref. No.
			Resp. Dept.

Item Des.
= 1.08
+ 1.07.1

Rev. .1 Sheet 040c
Cont. 040d

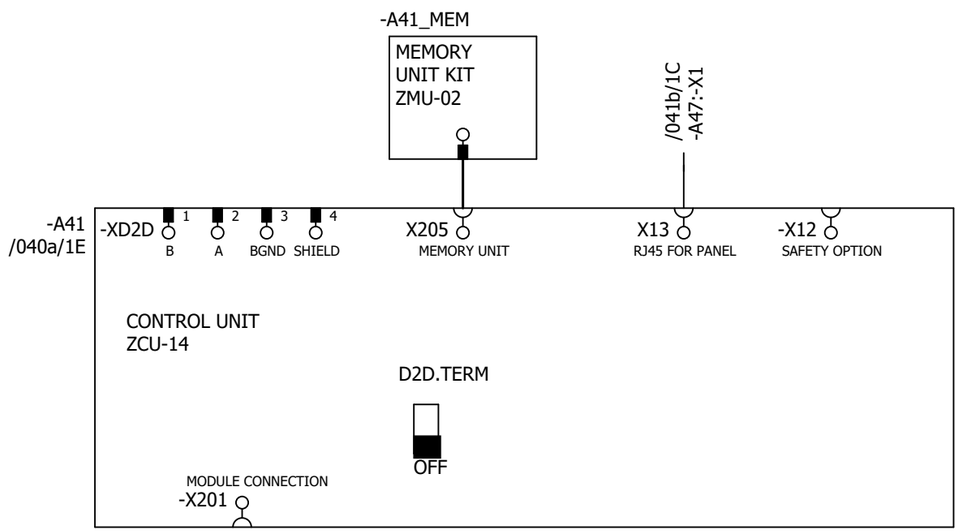

P345812 / 29711

Cust. Doc. No.	Prep. Sky-Xin Zhang 02.08.2023	Title CONTROL BOARD INV1.08 ACS880-107-0078A-3 400V	Circuit diagram EFS2
Cust. Ref. No.	App.		SAP Doc. No.
Customer WMMP	Project Zhaka Jack-up Lift System Zhaka Jack-up Lift System-1		EPLAN Doc. No. 3ABDC230674 - 1.08
			ABB Ref. No.
			Resp. Dept.

Item Des.
= 1.08
+ 1.07.1

Rev. .1 Sheet 040d
Cont. 041a

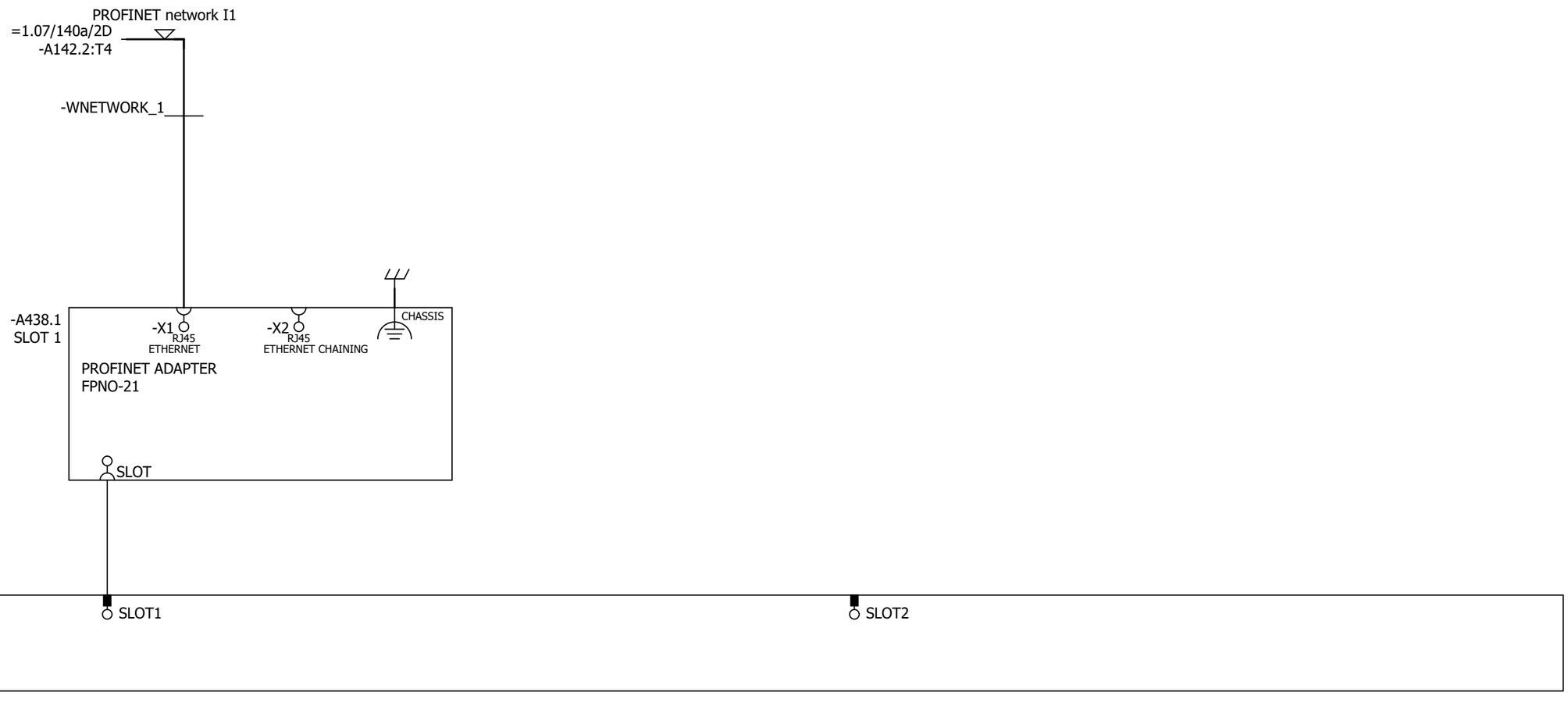

P345812 / 29711

Cust. Doc. No.	Prep. Sky-Xin Zhang 02.08.2023	Title OPTION CARDS INV1.08 ACS880-107-0078A-3 400V	Circuit diagram EFS2
Cust. Ref. No.	App.		SAP Doc. No.
Customer WMMP	Project Zhaka Jack-up Lift System Zhaka Jack-up Lift System-1		EPLAN Doc. No. 3ABDC230674 - 1.08
			ABB Ref. No.
			Resp. Dept.

Item Des.
= 1.08
+ 1.07.1

Rev. .1 Sheet 041a
Cont. 041b

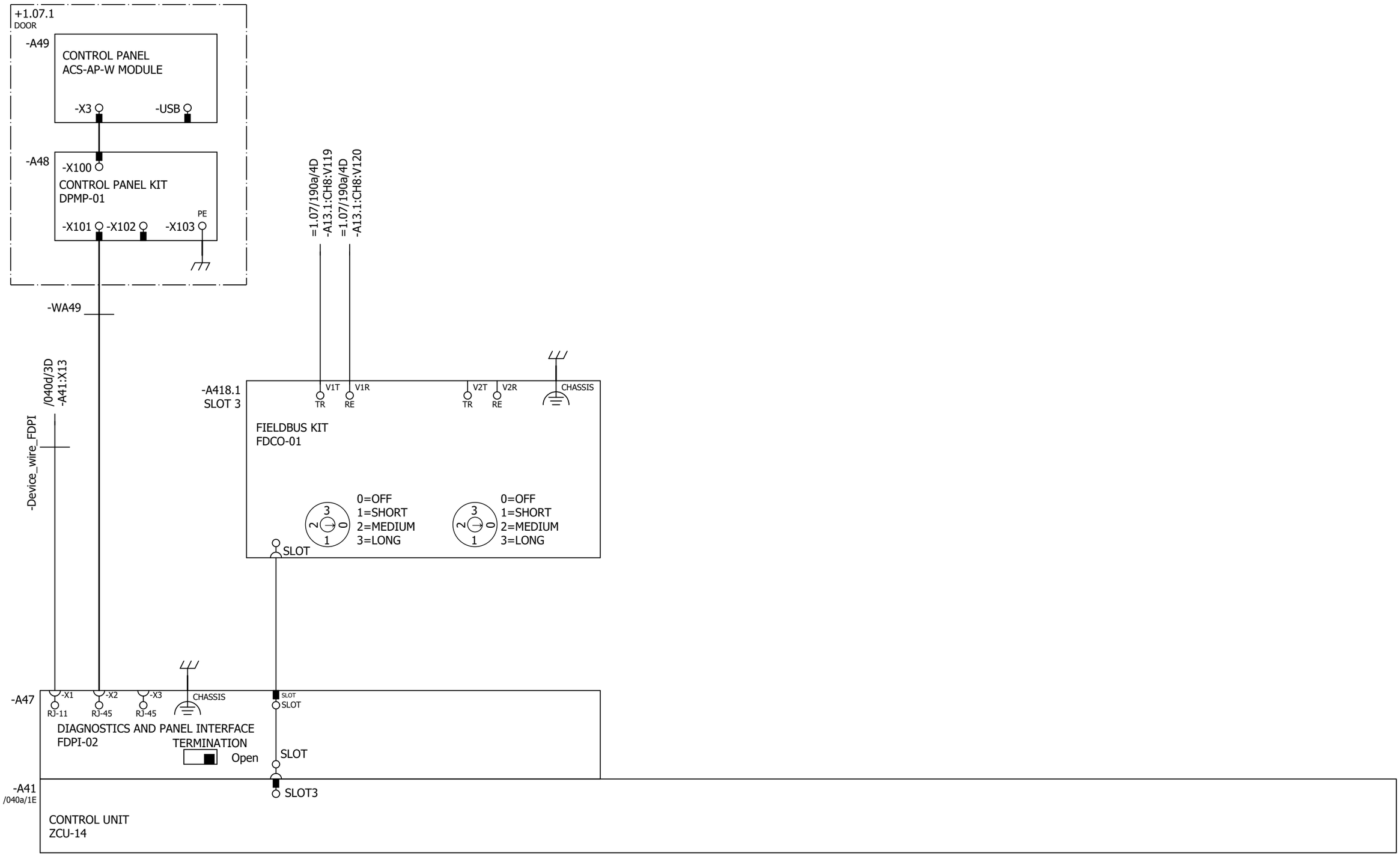

Cust. Doc. No.	Prep. Sky-Xin Zhang 02.08.2023	Title OPTION CARDS INV1.08 ACS880-107-0078A-3 400V	Circuit diagram EFS2
Cust. Ref. No.	App.		SAP Doc. No.
Customer WMMP	Project Zhaka Jack-up Lift System Zhaka Jack-up Lift System-1		EPLAN Doc. No. 3ABDC230674 - 1.08
			ABB Ref. No.
			Resp. Dept.

Item Des.
= 1.08
+ 1.07.1

Rev. .1 Sheet 041b
Cont. 061a

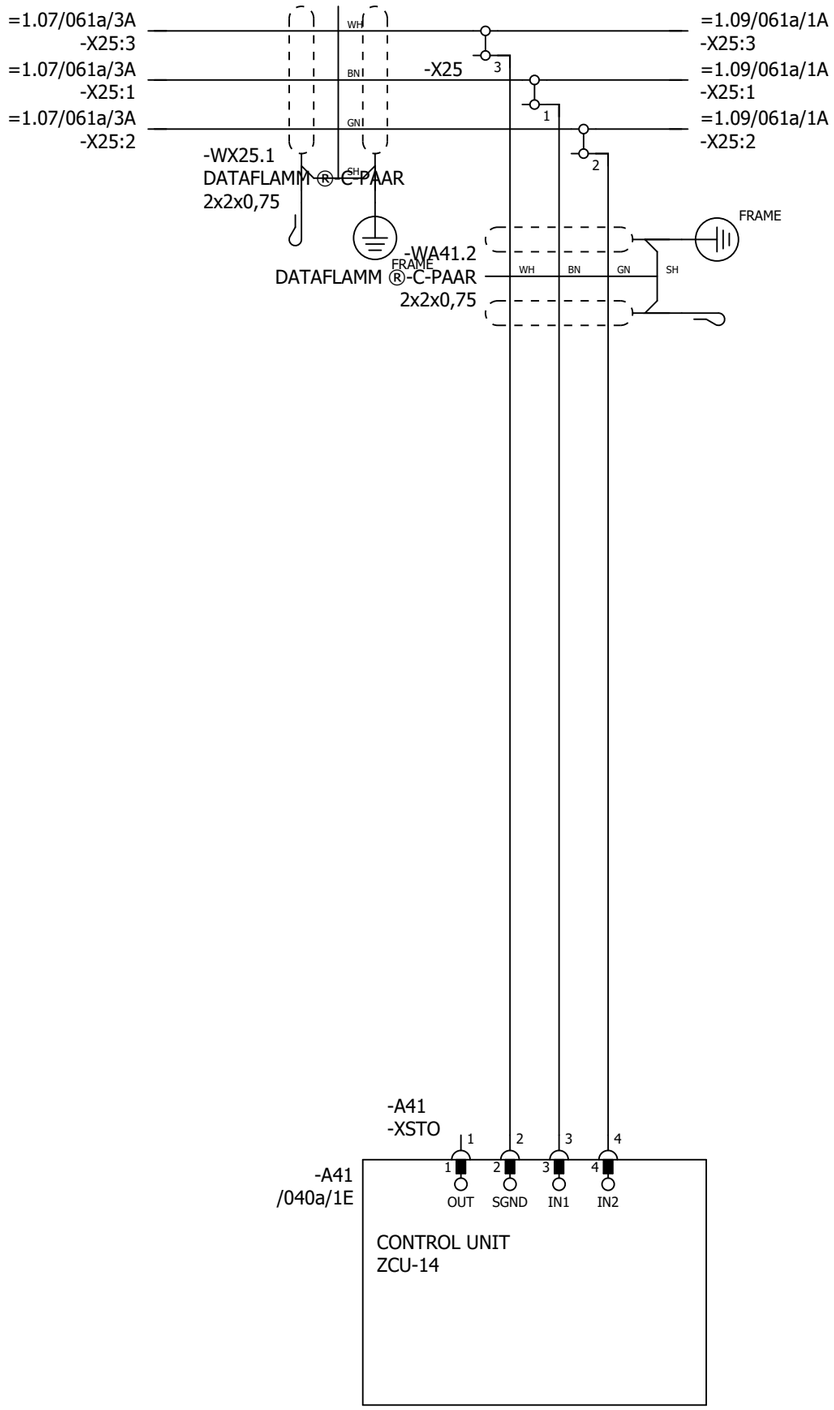

P345812 / 29711

SAFETY CIRCUIT
MACRO REVISION 6
RULES CONVERTED 19.7.2023

Cust. Doc. No.	Prep. Sky-Xin Zhang 02.08.2023	Title SAFETY CIRCUIT	Circuit diagram EFS2	Item Des.
Cust. Ref. No.	App.	INV1.08	SAP Doc. No.	= 1.08
Customer WMMP	Project Zhaka Jack-up Lift System	ACS880-107-0078A-3	EPLAN Doc. No. 3ABDC230674 - 1.08	+ 1.07.1
	Zhaka Jack-up Lift System-1	400V	ABB Ref. No.	Rev. .1 Sheet 061a
			Resp. Dept.	Cont. &MPC/Part list_1

Part list: 3ABDC230674DU01008

Item	Sort String	Qty.Str	Unit	Component Number	Description and text	Technical data
0010		1.000	ST		ACS880-107-0078A-3+A012+B053+C121+C132+	
0020		1.000	ST		_C206+E210+F272+F287+F288+G300+G307+G315	
0030		1.000	ST		_+G320+G330+G344+H352+H367+J400+K492+L50	
0040		1.000	ST		_3+P913+Q964	
0050		1.000	ST		=1.08	
0060		1.000	ST		+1.07.1,INU3	
0070		1.000	ST		Powerconversionequipment	
0080	-A41_MEM	1.000	PC	3AXD50000006010	MEMORY UNIT KIT ZMU-02	
0090	-T11	1.000	PC	3AUA0000120009-M	ACS880-104-0078A-3+P922	+P922
0100	SCREW	1.000	PC	3AFE68681481	SCREW K30X10 TORX	PT WN1452 ZN
0110	SOFTWARE	1.000	PC	3AUA0000153462	SOFTWARE PRIMARY CONTROL PROGRA	AINF6 FOR ZCU-12/14
0120		1.000	ST		R4imoduleDCfuse	
0130	-F11.1-2	2.000	PC	3AXD50000000219	FUSE FR27UQ69V160T/160A	6.921 CP URQ 27X60MM FERRULE;AR
0140		1.000	ST		R3i-R4imoduleDCfusebase	
0150	(-F11.1-2)	2.000	PC	3AUA0000089227	FUSE HOLDER FUSE BASE US271MI 150A	FUSE BASE US271MI 150A 800V
0160		1.000	ST		motorterminalR4i,coppercable	
0170	-X1	1.000	PC	3ABD50000000270	CONNECTOR PPAC-50	50 MM2;150 A;800V
0180	-X1	1.000	PC	3ABD50000000270	CONNECTOR PPAC-50	50 MM2;150 A;800V
0190	-X1	1.000	PC	3ABD50000000270	CONNECTOR PPAC-50	50 MM2;150 A;800V
0200		1.000	ST		24VDCsupplyZCU	
0210	-WA41_1	1.000	PC	3AXD50000005218	WIRE HARNESS 24VDC SUPPLY X51 ZCU V	HALOGEN FREE;X51_A51
0220		1.000	ST		Rooffancontrol	
0230	-WA41_3	1.000	PC	3AXD50000002688	WIRE HARNESS FAN CONTROL MAIN WIRE	HALOGEN FREE;X208_X26.3
0240		1.000	ST		Toprowmodulewireharness	
0250	-WT11	1.000	PC	3AXD50000002256	WIRE HARNESS R4I FUSE_MODULE V2	HALOGEN FREE;MAIN CIRCUIT WIRE SET
0260	-WX1	1.000	PC	3AXD50000002258	WIRE HARNESS R4I MODULE_OUTPUT TR V	HALOGEN FREE;MAIN CIRCUIT WIRE SET
0270		1.000	ST		Optionmodule	
0280	-A418.1	1.000	PC	3AUA0000107392	COMMUNIC. ADAPTER FDCO-01	
0290		1.000	ST		Controlpanel	
0300	-A47	1.000	PC	3AUA0000108650	FIELDBUS KIT FDPI-02	PANEL BUS ADAPTER
0310	-A48	1.000	PC	3AUA0000108878	CONTROL PANEL KIT DPMP-01	DPMP-01
0320	-A49	1.000	PC	3AXD50000025964	CONTROL PANEL ACS-AP-W MODULE	ASSISTANT PANEL WIRELESS CPU1
0330		1.000	ST		DCfusesupervision	

P345812 / 29711

Cust. Doc. No.	Prep.	Title PART LIST INV1.08 ACS880-107-0078A-3 400V	Item Des. = 1.08 +
Cust. Ref. No.	App.		SAP Doc. No.
Customer WMMP	Project Zhaka Jack-up Lift System Zhaka Jack-up Lift System-1		EPLAN Doc. No. 3ABDC230674 - 1.08
			ABB Ref. No. / Rev. / Sheet Part list_1
			Resp. Dept. / Cont. Part list_2

Part list: 3ABDC230674DU01008

Item	Sort String	Qty.Str	Unit	Component Number	Description and text	Technical data
0340	-K11.1-2	2.000	PC	3AXD50000021313	RELAY DEK_REL_G24/21	250 V;6 A;COIL 24VDC
0350		1.000	ST		FieldBus	
0360	-A438.1	1.000	PC	3AXD50000192779	OPTION MODULE FPNO-21	PROFINET IO
0370		1.000	ST		Supplementtorelay	
0380	(-K11.1)	1.000	PC	3AXD50000021312	TERMINAL BLOCK ST EB2_DIK_RD 2716693	2POLE, 6,15 MM PITCH;FOR DEK RELAYS

P345812 / 29711

Cust. Doc. No.	Prep.	Title PART LIST INV1.08 ACS880-107-0078A-3 400V	Item Des. = 1.08 +
Cust. Ref. No.	App.		SAP Doc. No.
Customer WMMP	Project Zhaka Jack-up Lift System Zhaka Jack-up Lift System-1		EPLAN Doc. No. 3ABDC230674 - 1.08
			ABB Ref. No. / Rev. / Sheet Part list_2
			Resp. Dept. / Cont. &EMA/1

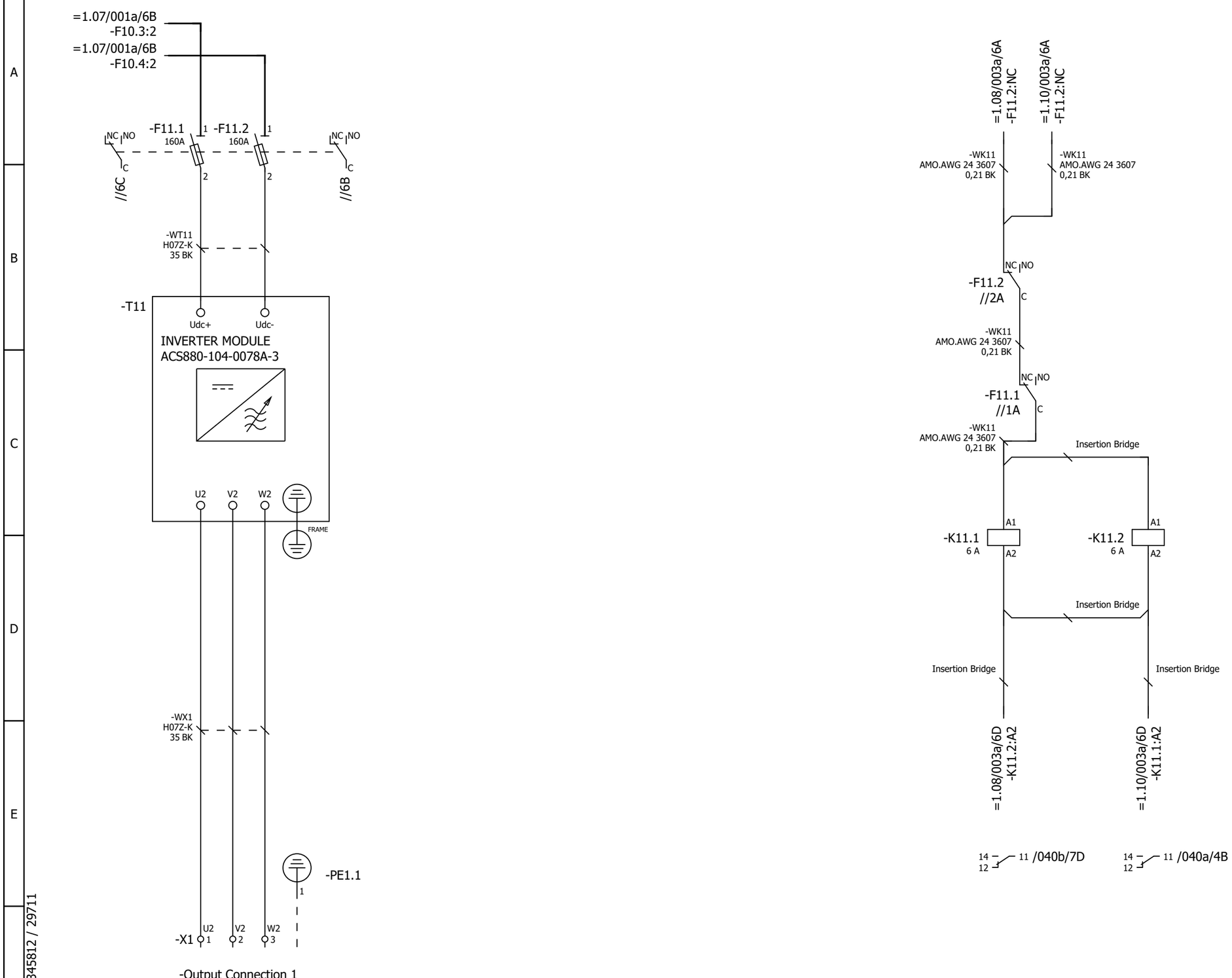

P345812 / 29711

Cust. Doc. No.	Prep. Sky-Xin Zhang 02.08.2023	Title MAIN CIRCUIT	Circuit diagram EFS2
Cust. Ref. No.	App.	INV1.09	SAP Doc. No.
Customer WMMP	Project Zhaka Jack-up Lift System	ACS880-107-0078A-3	EPLAN Doc. No. 3ABDC230674 - 1.09
	Zhaka Jack-up Lift System-1	400V	ABB Ref. No.
			Resp. Dept.

Item Des.
= 1.09
+ 1.07.1

Rev. .1 Sheet 003a
Cont. 040a

Control and status signals	Terminal	Pin
E-STOP FEEDBACK 1 - ESTOP ACTIVE	-XRO1	12
RUNNING 1 - RUNNING	-XRO2	22
FAULT (-1) 1 - NO FAULT	-XRO3	32

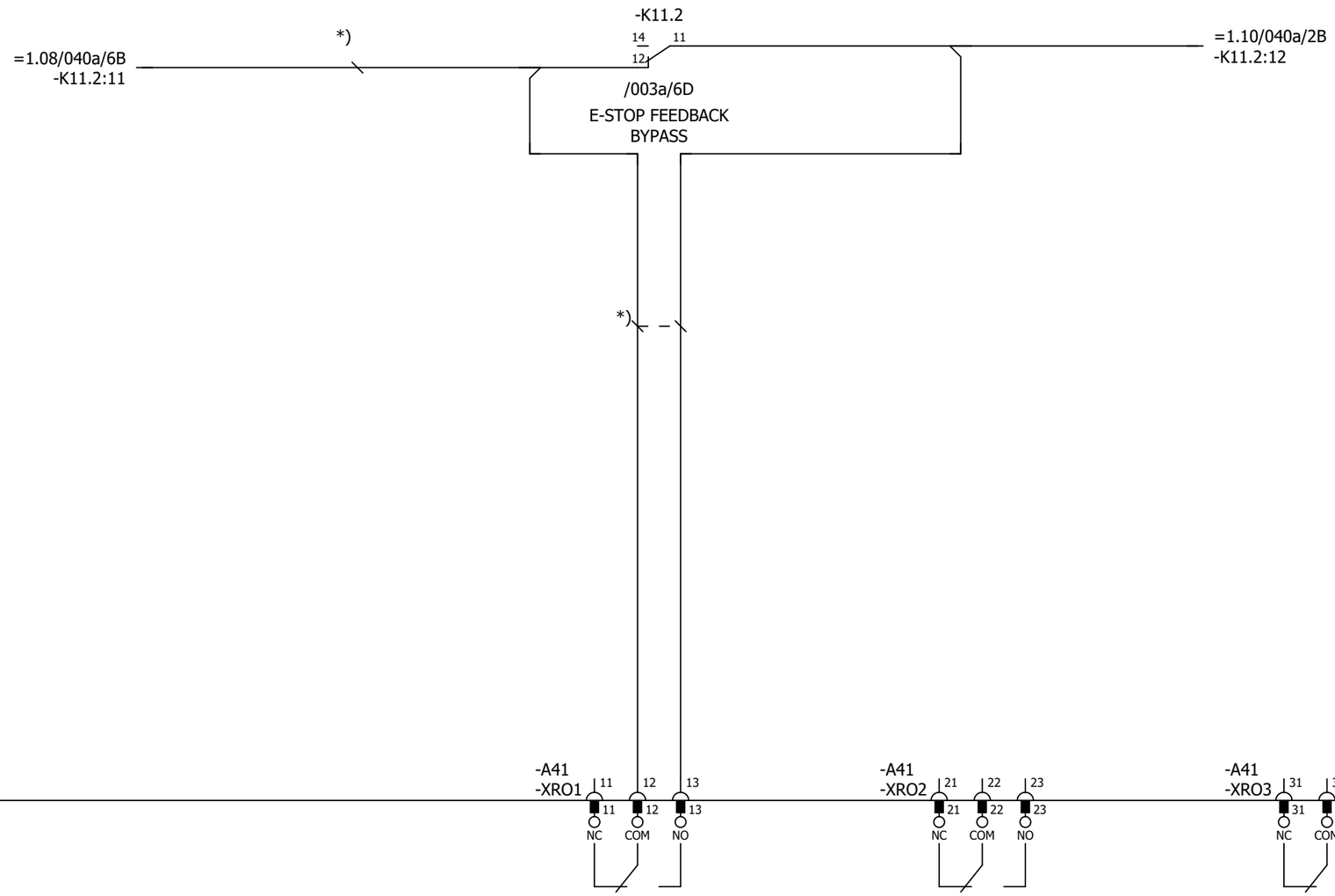

P345812 / 29711

Cust. Doc. No.	Prep. Sky-Xin Zhang 02.08.2023	Title CONTROL BOARD INV1.09 ACS880-107-0078A-3 400V	Circuit diagram EFS2
Cust. Ref. No.	App.		SAP Doc. No.
Customer WMMP	Project Zhaka Jack-up Lift System Zhaka Jack-up Lift System-1		EPLAN Doc. No. 3ABDC230674 - 1.09
			ABB Ref. No.
			Resp. Dept.

Item Des.
= 1.09
+ 1.07.1

Rev. .1 Sheet 040a
Cont. 040b

Control and status signals	Terminal	Pin
DIGITAL INTERLOCK	-XD24	1
START/STOP 1 - START	-XDI	1
FORWARD/REVERSE 1 - REVERSE	-XDI	2
RESET	-XDI	3
EMERGENCY STOP 0 - ACTIVE	-XDI	4
NOT SPECIFIED	-XDI	5
DI6 NOT IN USE	-XDI	6
OUTPUT: READY	-XDIO	1
OUTPUT: RUNNING	-XDIO	2

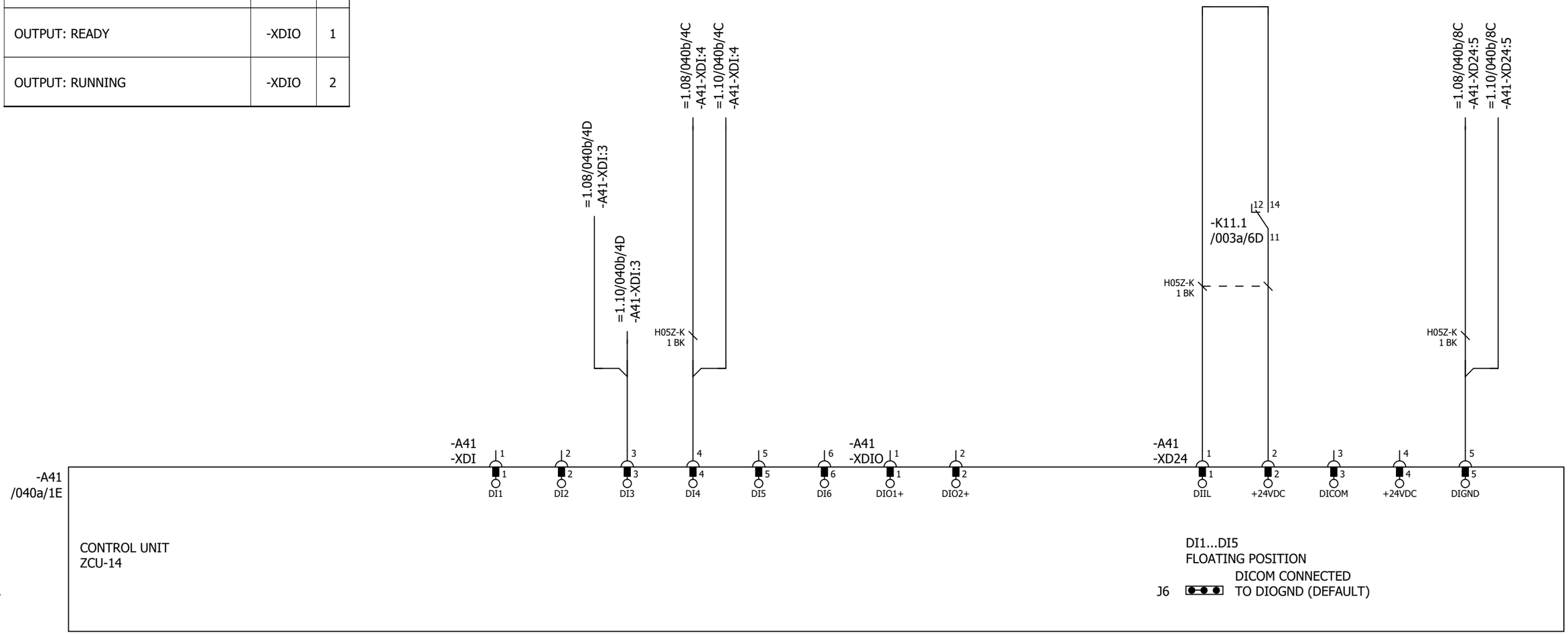

Cust. Doc. No.	Prep. Sky-Xin Zhang 02.08.2023	Title CONTROL BOARD INV1.09 ACS880-107-0078A-3 400V	Circuit diagram EFS2	Item Des.	
Cust. Ref. No.	App.		SAP Doc. No.	= 1.09 + 1.07.1	
Customer WMMP	Project Zhaka Jack-up Lift System Zhaka Jack-up Lift System-1	ABB	EPLAN Doc. No. 3ABDC230674 - 1.09		
			ABB Ref. No.	Rev. .1	Sheet 040b
			Resp. Dept.	Cont.	040c

Control and status signals	Terminal	Pin
MOTOR TEMP. MONITORING 0(2)…10V	-XAI	4
AI2 NOT SPECIFIED BY DEFAULT NOT IN USE 0(4)…20mA	-XAI	6
CURR SOU MOT TEMP MONIT 0(4)...20mA	-XAO	1
CURRENT 0(4)…20mA ↔ 0(4)…MOTOR CURRENT	-XAO	3

P345812 / 29711

Cust. Doc. No.	Prep. Sky-Xin Zhang 02.08.2023	Title CONTROL BOARD INV1.09 ACS880-107-0078A-3 400V	Circuit diagram EFS2
Cust. Ref. No.	App.		SAP Doc. No.
Customer WMMP	Project Zhaka Jack-up Lift System Zhaka Jack-up Lift System-1		EPLAN Doc. No. 3ABDC230674 - 1.09
			ABB Ref. No.
			Resp. Dept.

Item Des.
= 1.09
+ 1.07.1

Rev. .1 Sheet 040c
Cont. 040d

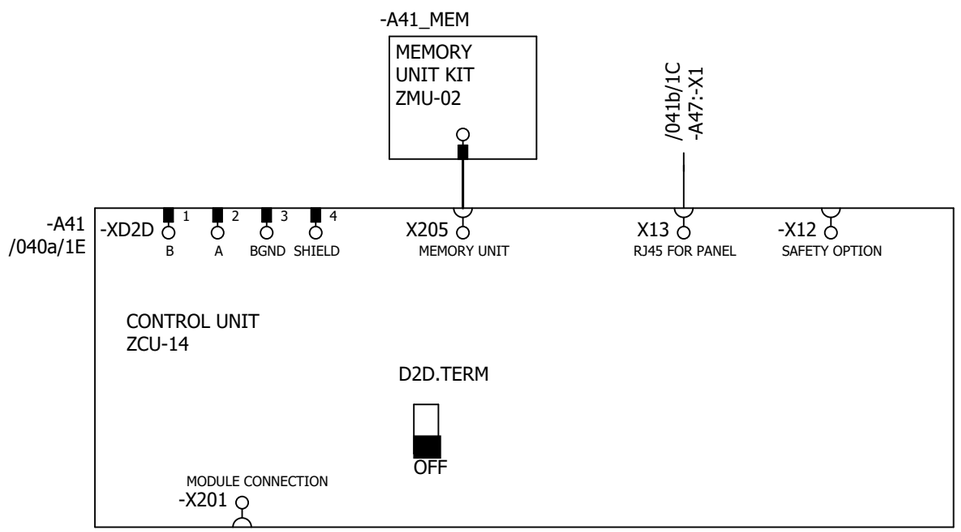

P345812 / 29711

Cust. Doc. No.	Prep. Sky-Xin Zhang 02.08.2023	Title CONTROL BOARD INV1.09 ACS880-107-0078A-3 400V	Circuit diagram EFS2
Cust. Ref. No.	App.		SAP Doc. No.
Customer WMMP	Project Zhaka Jack-up Lift System Zhaka Jack-up Lift System-1		EPLAN Doc. No. 3ABDC230674 - 1.09
			ABB Ref. No.
			Resp. Dept.

Item Des.	= 1.09 + 1.07.1
Rev. .1	Sheet 040d
Cont.	041a

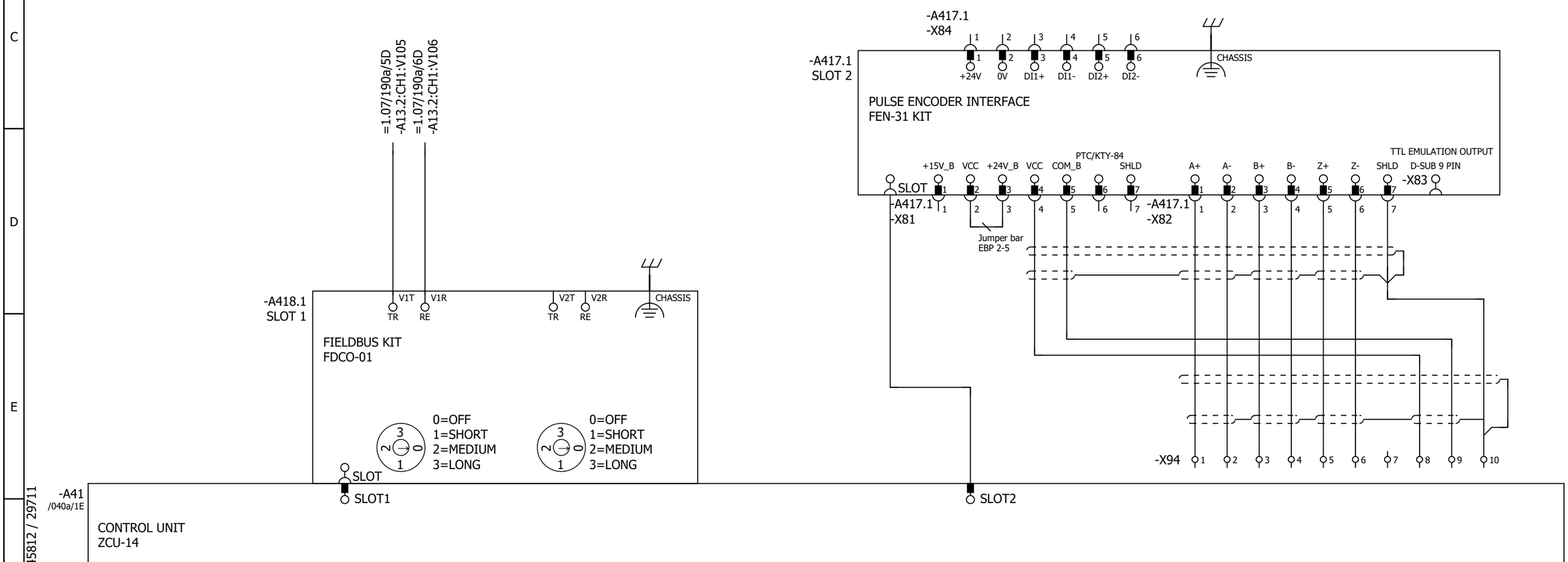

Cust. Doc. No.	Prep. Sky-Xin Zhang 02.08.2023	Title OPTION CARDS	Circuit diagram EFS2	Item Des.	
Cust. Ref. No.	App.	INV1.09	SAP Doc. No.	= 1.09	
Customer WMMP	Project Zhaka Jack-up Lift System	ACS880-107-0078A-3	EPLAN Doc. No. 3ABDC230674 - 1.09	+ 1.07.1	
	Zhaka Jack-up Lift System-1	400V	ABB Ref. No.	Rev. .1	Sheet 041a
			Resp. Dept.	Cont.	041b

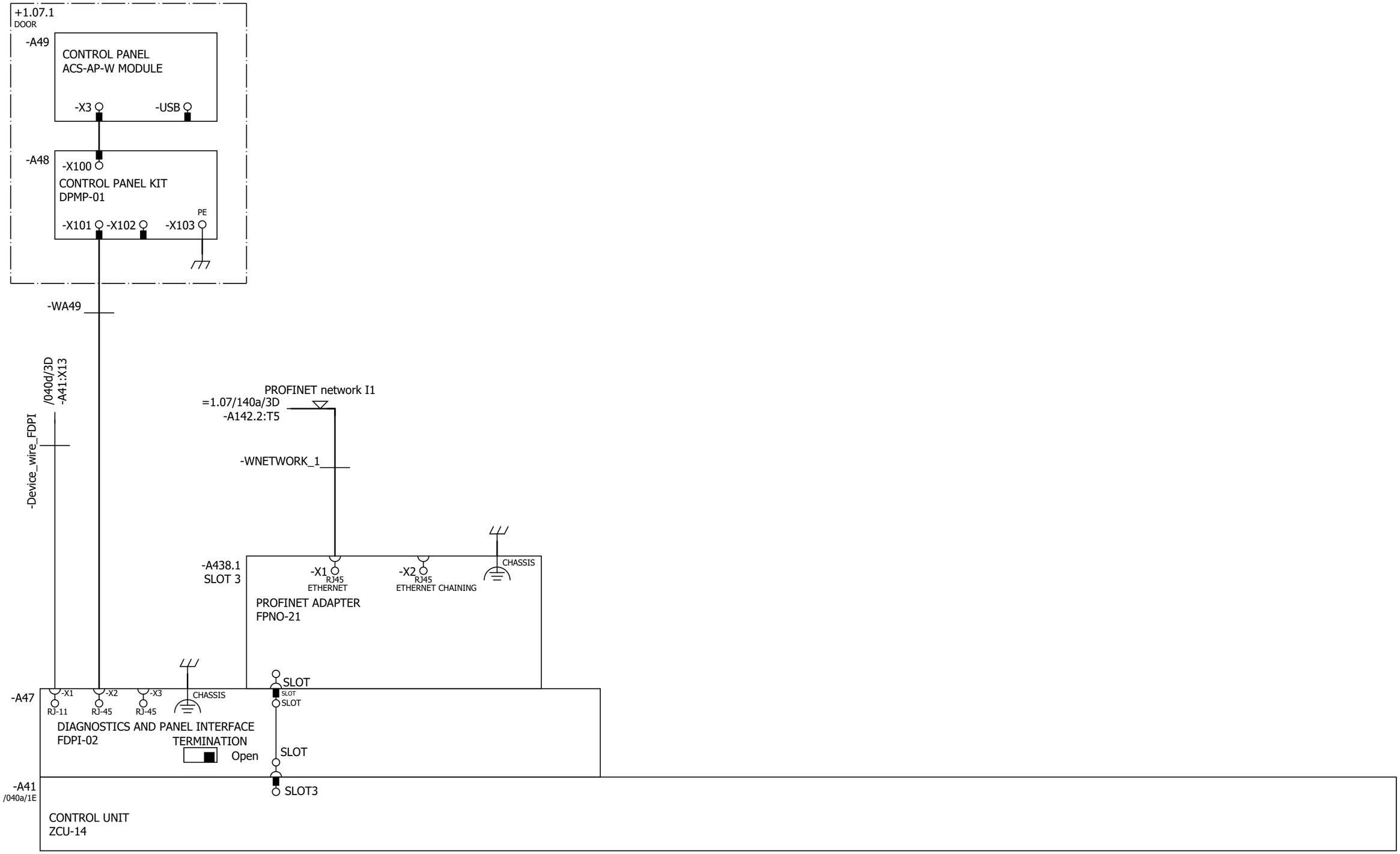

Cust. Doc. No.	Prep. Sky-Xin Zhang 02.08.2023	Title OPTION CARDS	Circuit diagram EFS2	Item Des.	
Cust. Ref. No.	App.	INV1.09	SAP Doc. No.	= 1.09	
Customer WMMP	Project Zhaka Jack-up Lift System	ACS880-107-0078A-3	EPLAN Doc. No. 3ABDC230674 - 1.09	+ 1.07.1	
		400V	ABB Ref. No.	Rev. .1	Sheet 041b
	Zhaka Jack-up Lift System-1		Resp. Dept.	Cont.	061a

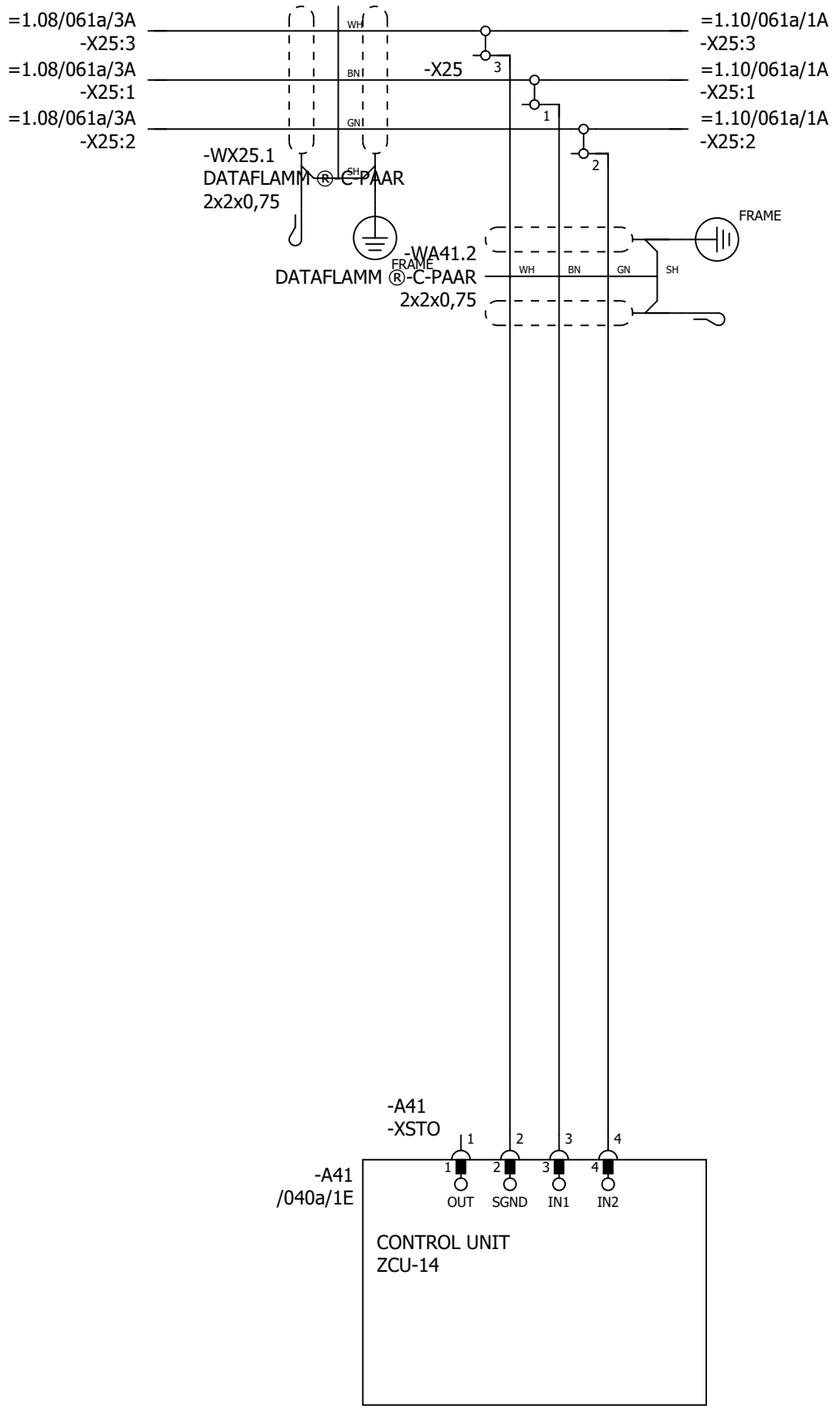

P345812 / 29711

SAFETY CIRCUIT
MACRO REVISION 6
RULES CONVERTED 19.7.2023

Cust. Doc. No.	Prep. Sky-Xin Zhang 02.08.2023	Title SAFETY CIRCUIT	Circuit diagram EFS2	Item Des.	
Cust. Ref. No.	App.	INV1.09	SAP Doc. No.	= 1.09	
Customer WMMP	Project Zhaka Jack-up Lift System	ACS880-107-0078A-3	EPLAN Doc. No. 3ABDC230674 - 1.09	+ 1.07.1	
	Zhaka Jack-up Lift System-1	400V	ABB Ref. No.	Rev. .1	Sheet 061a
			Resp. Dept.	Cont.	&MPC/Part list_1

Part list: 3ABDC230674DU01009

Item	Sort String	Qty.Str	Unit	Component Number	Description and text	Technical data
0010		1.000	ST		ACS880-107-0078A-3+A012+B053+C121+C132+	
0020		1.000	ST		_C206+E210+F272+F287+F288+G300+G307+G315	
0030		1.000	ST		_+G320+G330+G344+H352+H367+J400+K492+L50	
0040		1.000	ST		_2+L503+P913+Q964	
0050		1.000	ST		=1.09	
0060		1.000	ST		+1.07.1,INU3	
0070		1.000	ST		Powerconversionequipment	
0080	-A41_MEM	1.000	PC	3AXD50000006010	MEMORY UNIT KIT ZMU-02	
0090	-T11	1.000	PC	3AUA0000120009-M	ACS880-104-0078A-3+P922	+P922
0100	SCREW	1.000	PC	3AFE68681481	SCREW K30X10 TORX	PT WN1452 ZN
0110	SOFTWARE	1.000	PC	3AUA0000153462	SOFTWARE PRIMARY CONTROL PROGRA	AINF6 FOR ZCU-12/14
0120		1.000	ST		R4imoduleDCfuse	
0130	-F11.1-2	2.000	PC	3AXD50000000219	FUSE FR27UQ69V160T/160A	6.921 CP URQ 27X60MM FERRULE;AR
0140		1.000	ST		R3i-R4imoduleDCfusebase	
0150	(-F11.1-2)	2.000	PC	3AUA0000089227	FUSE HOLDER FUSE BASE US271MI 150A	FUSE BASE US271MI 150A 800V
0160		1.000	ST		motorterminalR4i,coppercable	
0170	-X1	1.000	PC	3ABD50000000270	CONNECTOR PPAC-50	50 MM2;150 A;800V
0180	-X1	1.000	PC	3ABD50000000270	CONNECTOR PPAC-50	50 MM2;150 A;800V
0190	-X1	1.000	PC	3ABD50000000270	CONNECTOR PPAC-50	50 MM2;150 A;800V
0200		1.000	ST		24VDCsupplyZCU	
0210	-WA41_1	1.000	PC	3AXD50000005218	WIRE HARNESS 24VDC SUPPLY X51 ZCU V	HALOGEN FREE;X51_A51
0220		1.000	ST		Rooffancontrol	
0230	-WA41_3	1.000	PC	3AXD50000002688	WIRE HARNESS FAN CONTROL MAIN WIRE	HALOGEN FREE;X208_X26.3
0240		1.000	ST		Toprowmodulewireharness	
0250	-WT11	1.000	PC	3AXD50000002256	WIRE HARNESS R4I FUSE_MODULE V2	HALOGEN FREE;MAIN CIRCUIT WIRE SET
0260	-WX1	1.000	PC	3AXD50000002258	WIRE HARNESS R4I MODULE_OUTPUT TR V	HALOGEN FREE;MAIN CIRCUIT WIRE SET
0270		1.000	ST		Encoder	
0280	-A417.1	1.000	PC	3AFE68978955	COMMUNIC. ADAPTER FEN-31	FEN-31
0290		1.000	ST		Optionmodule	
0300	-A418.1	1.000	PC	3AUA0000107392	COMMUNIC. ADAPTER FDCO-01	
0310		1.000	ST		Controlpanel	
0320	-A47	1.000	PC	3AUA0000108650	FIELDBUS KIT FDPI-02	PANEL BUS ADAPTER
0330	-A48	1.000	PC	3AUA0000108878	CONTROL PANEL KIT DPMP-01	DPMP-01

P345812 / 29711

Cust. Doc. No.	Prep.	Title PART LIST INV1.09 ACS880-107-0078A-3 400V	Item Des. = 1.09 +
Cust. Ref. No.	App.		SAP Doc. No.
Customer WMMP	Project Zhaka Jack-up Lift System Zhaka Jack-up Lift System-1		EPLAN Doc. No. 3ABDC230674 - 1.09
			ABB Ref. No. / Rev. / Sheet Part list_1
			Resp. Dept. / Cont. Part list_2

Part list: 3ABDC230674DU01009

Item	Sort String	Qty.Str	Unit	Component Number	Description and text	Technical data
0340	-A49	1.000	PC	3AXD50000025964	CONTROL PANEL ACS-AP-W MODULE	ASSISTANT PANEL WIRELESS CPU1
0350		1.000	ST		DCfusesupervision	
0360	-K11.1-2	2.000	PC	3AXD50000021313	RELAY DEK_REL_G24/21	250 V;6 A;COIL 24VDC
0370		1.000	ST		FieldBus	
0380	-A438.1	1.000	PC	3AXD50000192779	OPTION MODULE FPNO-21	PROFINET IO
0390		1.000	ST		Supplementtorelay	
0400	(-K11.1)	1.000	PC	3AXD50000021312	TERMINAL BLOCK ST EB2_DIK_RD 2716693	2POLE, 6,15 MM PITCH;FOR DEK RELAYS

P345812 / 29711

Cust. Doc. No.	Prep.	Title PART LIST INV1.09 ACS880-107-0078A-3 400V	Item Des. = 1.09 +
Cust. Ref. No.	App.		SAP Doc. No.
Customer WMMP	Project Zhaka Jack-up Lift System Zhaka Jack-up Lift System-1		EPLAN Doc. No. 3ABDC230674 - 1.09
			ABB Ref. No. / Rev. / Sheet Part list_2
			Resp. Dept. / Cont. &EMA/1

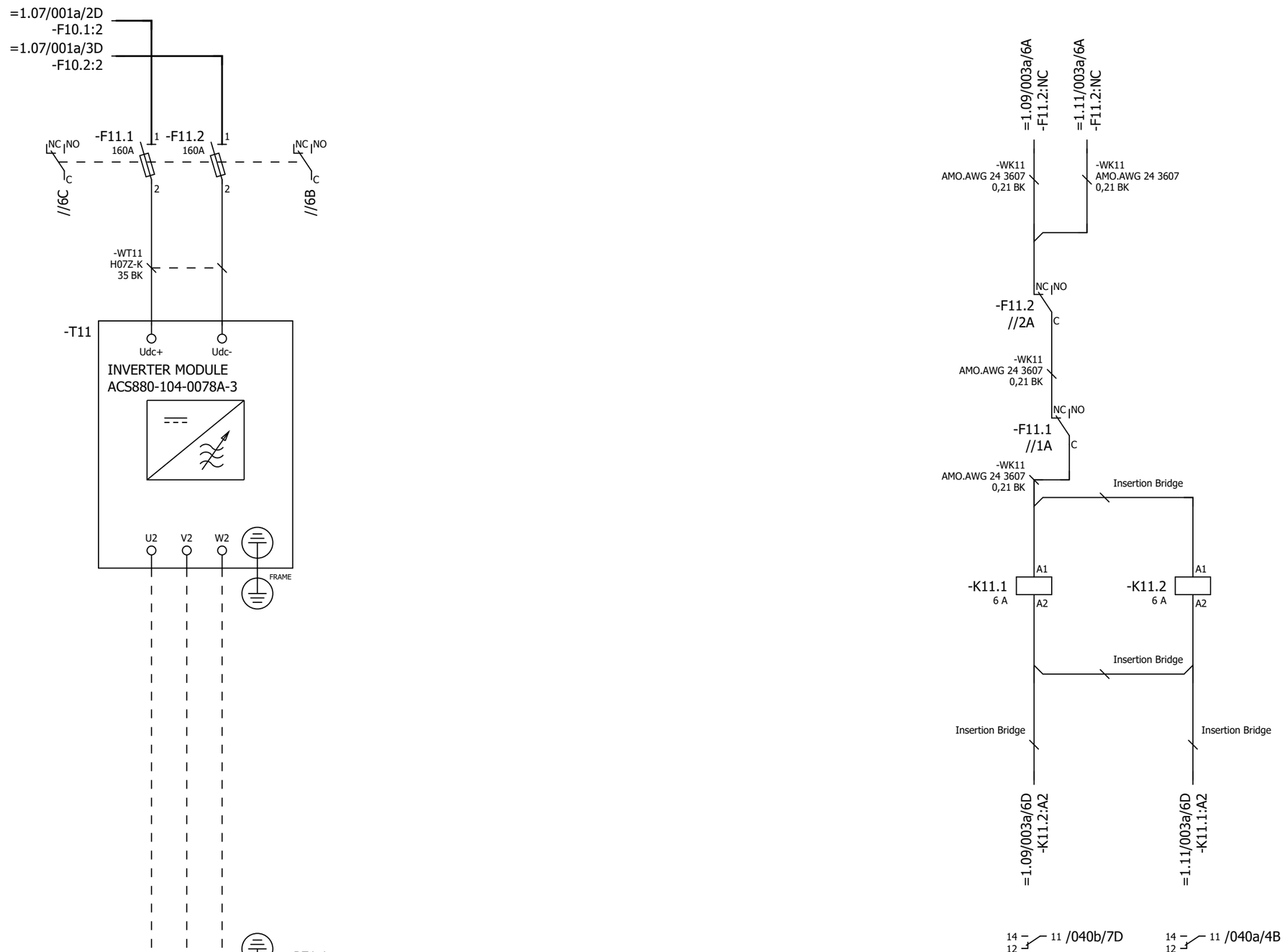

P345812 / 29711

Cust. Doc. No.	Prep. Sky-Xin Zhang 02.08.2023	Title MAIN CIRCUIT	Circuit diagram EFS2
Cust. Ref. No.	App.	INV1.10	SAP Doc. No.
Customer WMMP	Project Zhaka Jack-up Lift System	ACS880-107-0078A-3	EPLAN Doc. No. 3ABDC230674 - 1.10
	Zhaka Jack-up Lift System-1	400V	ABB Ref. No.
			Resp. Dept.

Item Des.
= 1.10
+ 1.07.1

Rev. .1 Sheet 003a
Cont. 040a

Control and status signals	Terminal	Pin
E-STOP FEEDBACK 1 - ESTOP ACTIVE	-XRO1	12
RUNNING 1 - RUNNING	-XRO2	22
FAULT (-1) 1 - NO FAULT	-XRO3	32

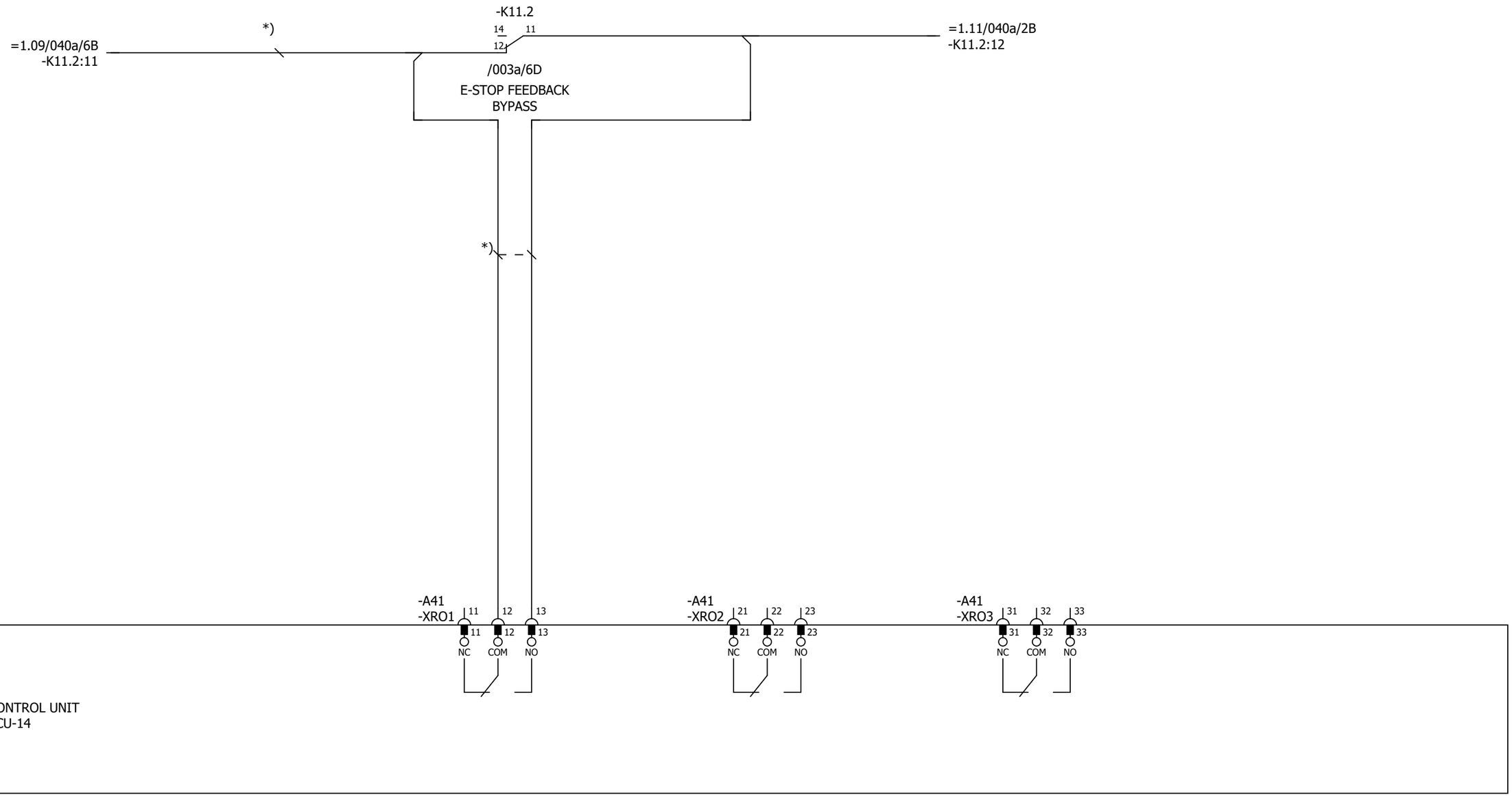

Cust. Doc. No.	Prep. Sky-Xin Zhang 02.08.2023	Title CONTROL BOARD INV1.10 ACS880-107-0078A-3 400V	Circuit diagram EFS2	Item Des.	
Cust. Ref. No.	App.		SAP Doc. No.	= 1.10 + 1.07.1	
Customer WMMP	Project Zhaka Jack-up Lift System Zhaka Jack-up Lift System-1	ABB	EPLAN Doc. No. 3ABDC230674 - 1.10		
			ABB Ref. No.	Rev. .1	Sheet 040a
			Resp. Dept.	Cont.	040b

Control and status signals	Terminal	Pin
DIGITAL INTERLOCK	-XD24	1
START/STOP 1 - START	-XDI	1
FORWARD/REVERSE 1 - REVERSE	-XDI	2
RESET	-XDI	3
EMERGENCY STOP 0 - ACTIVE	-XDI	4
NOT SPECIFIED	-XDI	5
DI6 NOT IN USE	-XDI	6
OUTPUT: READY	-XDIO	1
OUTPUT: RUNNING	-XDIO	2

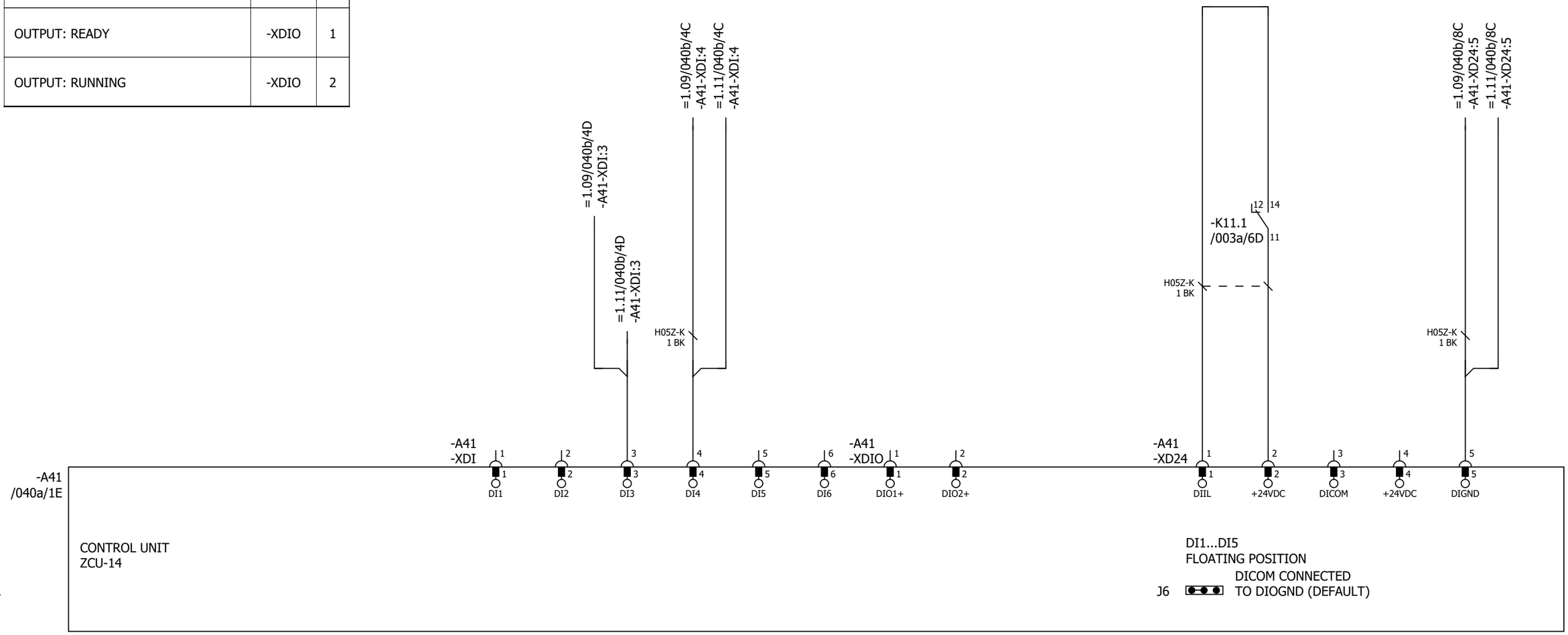

P345812 / 29711

Cust. Doc. No.	Prep. Sky-Xin Zhang 02.08.2023	Title CONTROL BOARD INV1.10 ACS880-107-0078A-3 400V	Circuit diagram EFS2
Cust. Ref. No.	App.		SAP Doc. No.
Customer WMMP	Project Zhaka Jack-up Lift System Zhaka Jack-up Lift System-1		EPLAN Doc. No. 3ABDC230674 - 1.10
			ABB Ref. No.
			Resp. Dept.

Item Des.
= 1.10
+ 1.07.1

Rev. .1 Sheet 040b
Cont. 040c

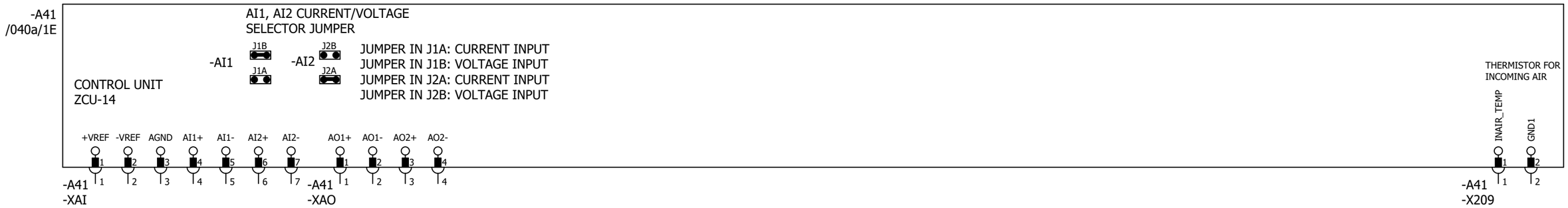

Control and status signals	Terminal	Pin
MOTOR TEMP. MONITORING 0(2)…10V	-XAI	4
AI2 NOT SPECIFIED BY DEFAULT NOT IN USE 0(4)…20mA	-XAI	6
CURR SOU MOT TEMP MONIT 0(4)...20mA	-XAO	1
CURRENT 0(4)…20mA ↔ 0(4)…MOTOR CURRENT	-XAO	3

P345812 / 29711

Cust. Doc. No.	Prep. Sky-Xin Zhang 02.08.2023	Title CONTROL BOARD INV1.10 ACS880-107-0078A-3 400V	Circuit diagram EFS2
Cust. Ref. No.	App.		SAP Doc. No.
Customer WMMP	Project Zhaka Jack-up Lift System Zhaka Jack-up Lift System-1		EPLAN Doc. No. 3ABDC230674 - 1.10
			ABB Ref. No.
			Resp. Dept.

Item Des.
= 1.10
+ 1.07.1

Rev. .1 Sheet 040c
Cont. 040d

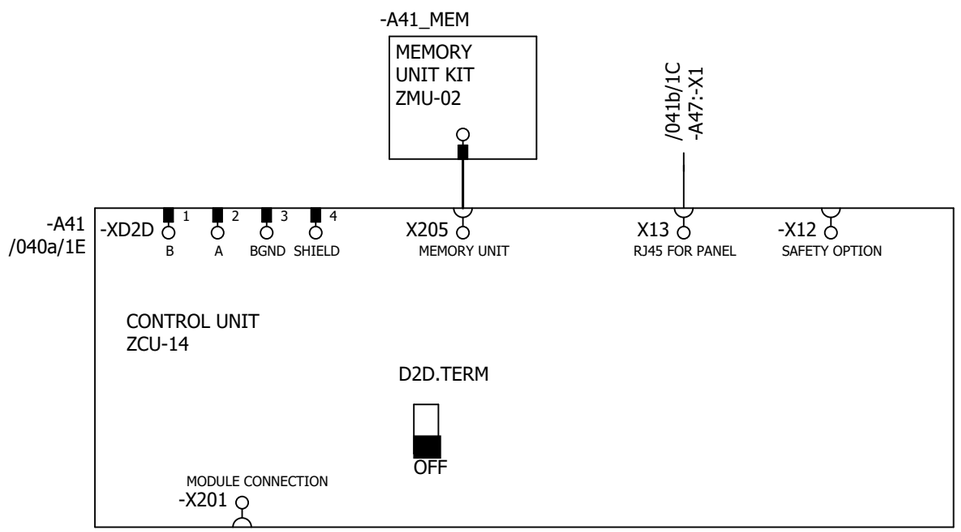

P345812 / 29711

Cust. Doc. No.	Prep. Sky-Xin Zhang 02.08.2023	Title CONTROL BOARD	Circuit diagram EFS2	Item Des.	
Cust. Ref. No.	App.	INV1.10	SAP Doc. No.	= 1.10	
Customer WMMP	Project Zhaka Jack-up Lift System	ACS880-107-0078A-3	EPLAN Doc. No. 3ABDC230674 - 1.10	+ 1.07.1	
	Zhaka Jack-up Lift System-1	400V	ABB Ref. No.	Rev. .1	Sheet 040d
			Resp. Dept.	Cont.	041a

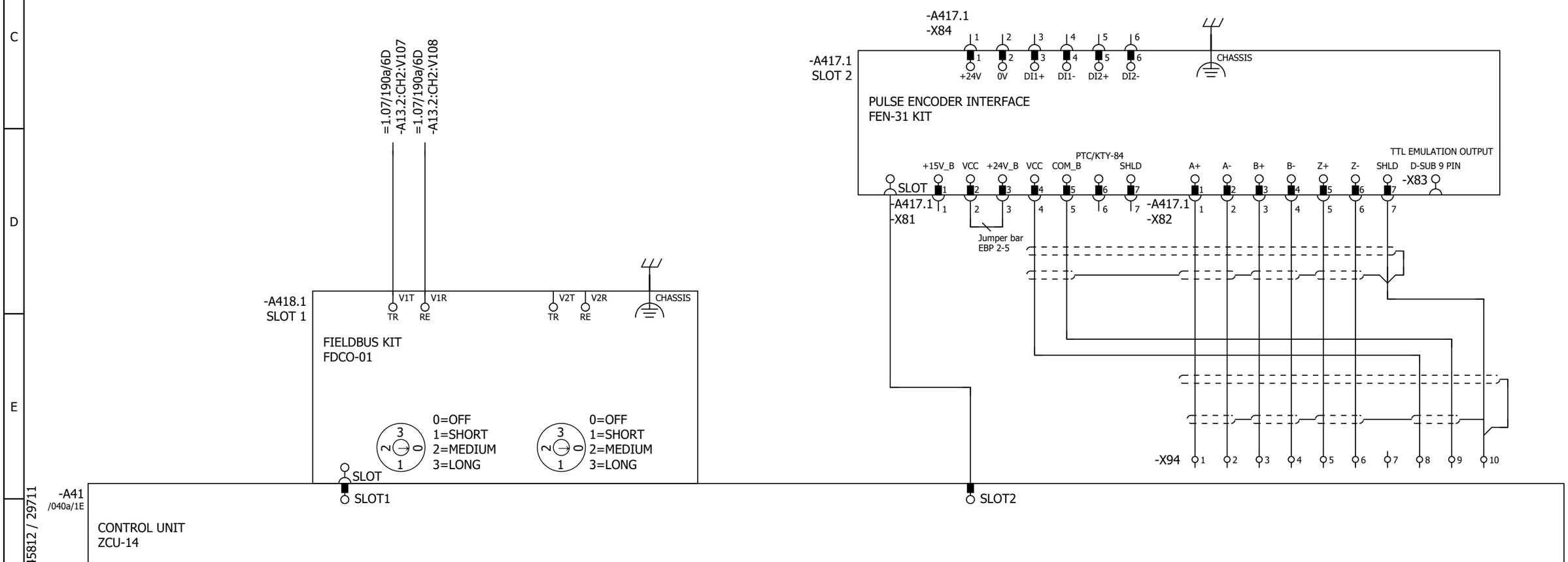

Cust. Doc. No.	Prep. Sky-Xin Zhang 02.08.2023	Title OPTION CARDS	Circuit diagram EFS2	Item Des.	
Cust. Ref. No.	App.	INV1.10	SAP Doc. No.	= 1.10	
Customer WMMP	Project Zhaka Jack-up Lift System	ACS880-107-0078A-3	EPLAN Doc. No. 3ABDC230674 - 1.10	+ 1.07.1	
	Zhaka Jack-up Lift System-1	400V	ABB Ref. No.	Rev. .1	Sheet 041a
			Resp. Dept.	Cont.	041b

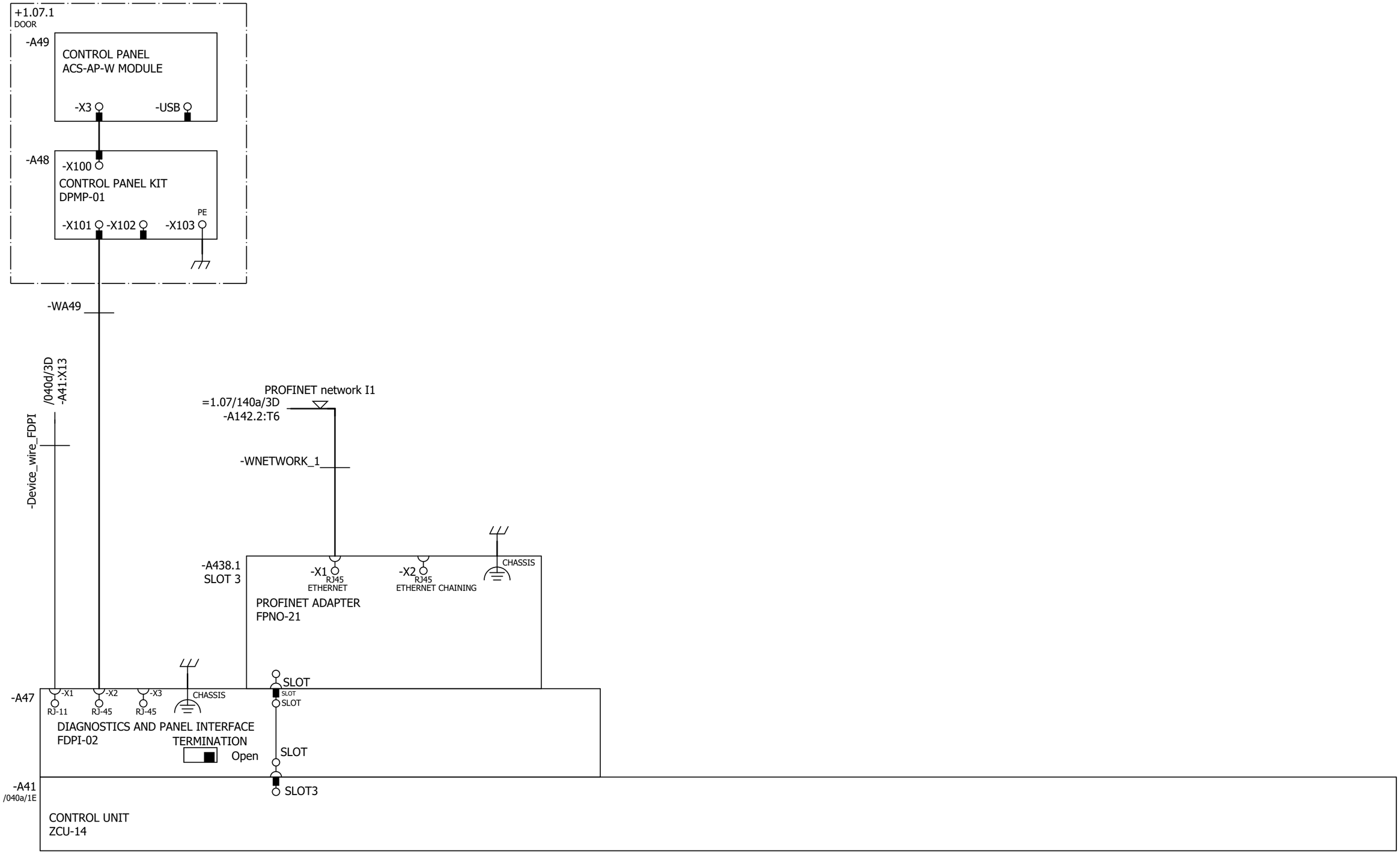

Cust. Doc. No.	Prep. Sky-Xin Zhang 02.08.2023	Title OPTION CARDS	Circuit diagram EFS2	Item Des.	
Cust. Ref. No.	App.	INV1.10	SAP Doc. No.	= 1.10	
Customer WMMP	Project Zhaka Jack-up Lift System	ACS880-107-0078A-3	EPLAN Doc. No. 3ABDC230674 - 1.10	+ 1.07.1	
		400V	ABB Ref. No.	Rev. .1	Sheet 041b
	Zhaka Jack-up Lift System-1		Resp. Dept.	Cont.	061a

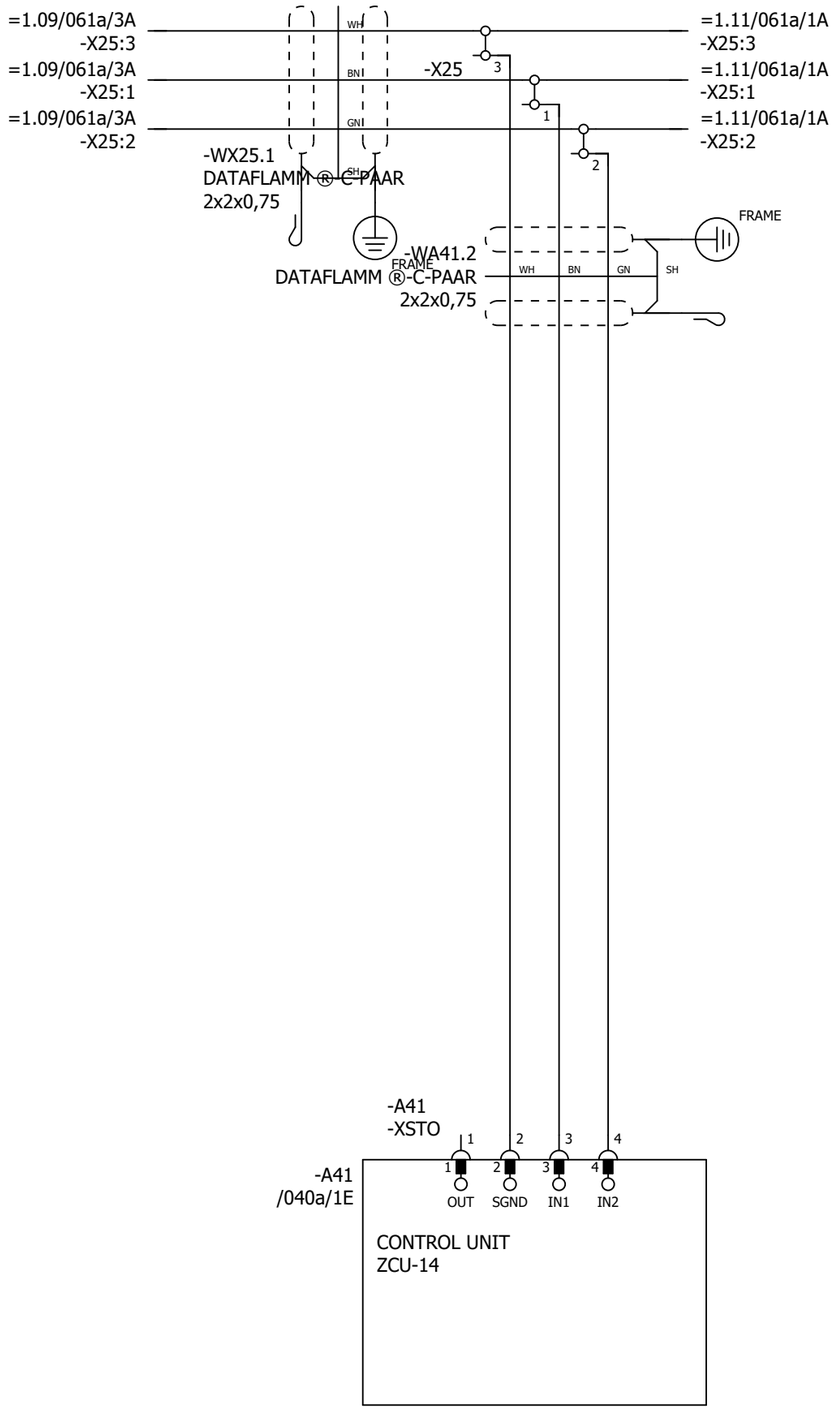

P345812 / 29711

SAFETY CIRCUIT
MACRO REVISION 6
RULES CONVERTED 19.7.2023

Cust. Doc. No.	Prep. Sky-Xin Zhang 02.08.2023	Title SAFETY CIRCUIT	Circuit diagram EFS2
Cust. Ref. No.	App.	INV1.10	SAP Doc. No.
Customer WMMP	Project Zhaka Jack-up Lift System	ACS880-107-0078A-3	EPLAN Doc. No. 3ABDC230674 - 1.10
	Zhaka Jack-up Lift System-1	400V	ABB Ref. No.
			Resp. Dept.

Item Des.
= 1.10
+ 1.07.1

Rev. .1 Sheet 061a

Cont. &MPC/Part list_1

Part list: 3ABDC230674DU01010

Item	Sort String	Qty.Str	Unit	Component Number	Description and text	Technical data
0010		1.000	ST		ACS880-107-0078A-3+A012+B053+C121+C132+	
0020		1.000	ST		_C206+E210+F272+F287+F288+G300+G307+G315	
0030		1.000	ST		_+G320+G330+G344+H352+H367+J400+K492+L50	
0040		1.000	ST		_2+L503+P913+Q964	
0050		1.000	ST		=1.10	
0060		1.000	ST		+1.07.1,INU3	
0070		1.000	ST		Powerconversionequipment	
0080	-A41_MEM	1.000	PC	3AXD50000006010	MEMORY UNIT KIT ZMU-02	
0090	-T11	1.000	PC	3AUA0000120009-M	ACS880-104-0078A-3+P922	+P922
0100	SCREW	1.000	PC	3AFE68681481	SCREW K30X10 TORX	PT WN1452 ZN
0110	SOFTWARE	1.000	PC	3AUA0000153462	SOFTWARE PRIMARY CONTROL PROGRA	AINF6 FOR ZCU-12/14
0120		1.000	ST		R4imoduleDCfuse	
0130	-F11.1-2	2.000	PC	3AXD50000000219	FUSE FR27UQ69V160T/160A	6.921 CP URQ 27X60MM FERRULE;AR
0140		1.000	ST		R3i-R4imoduleDCfusebase	
0150	(-F11.1-2)	2.000	PC	3AUA0000089227	FUSE HOLDER FUSE BASE US271MI 150A	FUSE BASE US271MI 150A 800V
0160		1.000	ST		24VDCsupplyZCU	
0170	-WA41_1	1.000	PC	3AXD50000005218	WIRE HARNESS 24VDC SUPPLY X51 ZCU V	HALOGEN FREE;X51_A51
0180		1.000	ST		Rooffancontrol	
0190	-WA41_3	1.000	PC	3AXD50000002688	WIRE HARNESS FAN CONTROL MAIN WIRE	HALOGEN FREE;X208_X26.3
0200		1.000	ST		Bottomrowmodulewireharness	
0210	-WT11	1.000	PC	3AXD50000002418	WIRE HARNESS R4I FUSE_MODULE BR V2	HALOGEN FREE;MAIN CIRCUIT WIRE SET
0220		1.000	ST		Encoder	
0230	-A417.1	1.000	PC	3AFE68978955	COMMUNIC. ADAPTER FEN-31	FEN-31
0240		1.000	ST		Optionmodule	
0250	-A418.1	1.000	PC	3AUA0000107392	COMMUNIC. ADAPTER FDCO-01	
0260		1.000	ST		Controlpanel	
0270	-A47	1.000	PC	3AUA0000108650	FIELDBUS KIT FDPI-02	PANEL BUS ADAPTER
0280	-A48	1.000	PC	3AUA0000108878	CONTROL PANEL KIT DPMP-01	DPMP-01
0290	-A49	1.000	PC	3AXD50000025964	CONTROL PANEL ACS-AP-W MODULE	ASSISTANT PANEL WIRELESS CPU1
0300		1.000	ST		DCfusesupervision	
0310	-K11.1-2	2.000	PC	3AXD50000021313	RELAY DEK_REL_G24/21	250 V;6 A;COIL 24VDC
0320		1.000	ST		FieldBus	
0330	-A438.1	1.000	PC	3AXD50000192779	OPTION MODULE FPNO-21	PROFINET IO

P345812 / 29711

Cust. Doc. No.	Prep.	Title PART LIST INV1.10 ACS880-107-0078A-3 400V	Item Des. = 1.10 +
Cust. Ref. No.	App.		SAP Doc. No.
Customer WMMP	Project Zhaka Jack-up Lift System Zhaka Jack-up Lift System-1		EPLAN Doc. No. 3ABDC230674 - 1.10
			ABB Ref. No. / Rev. / Sheet Part list_1
			Resp. Dept. / Cont. Part list_2

Part list: 3ABDC230674DU01010

Item	Sort String	Qty.Str	Unit	Component Number	Description and text	Technical data
0340		1.000	ST		Supplementtorelay	
0350	(-K11.1)	1.000	PC	3AXD50000021312	TERMINAL BLOCK ST EB2_DIK_RD 2716693	2POLE, 6,15 MM PITCH;FOR DEK RELAYS

P345812 / 29711

Cust. Doc. No.	Prep.	Title PART LIST INV1.10 ACS880-107-0078A-3 400V	Item Des. = 1.10 +
Cust. Ref. No.	App.		SAP Doc. No.
Customer WMMP	Project Zhaka Jack-up Lift System Zhaka Jack-up Lift System-1		EPLAN Doc. No. 3ABDC230674 - 1.10
			ABB Ref. No. / Rev. / Sheet Part list_2
			Resp. Dept. / Cont. &EMA/1

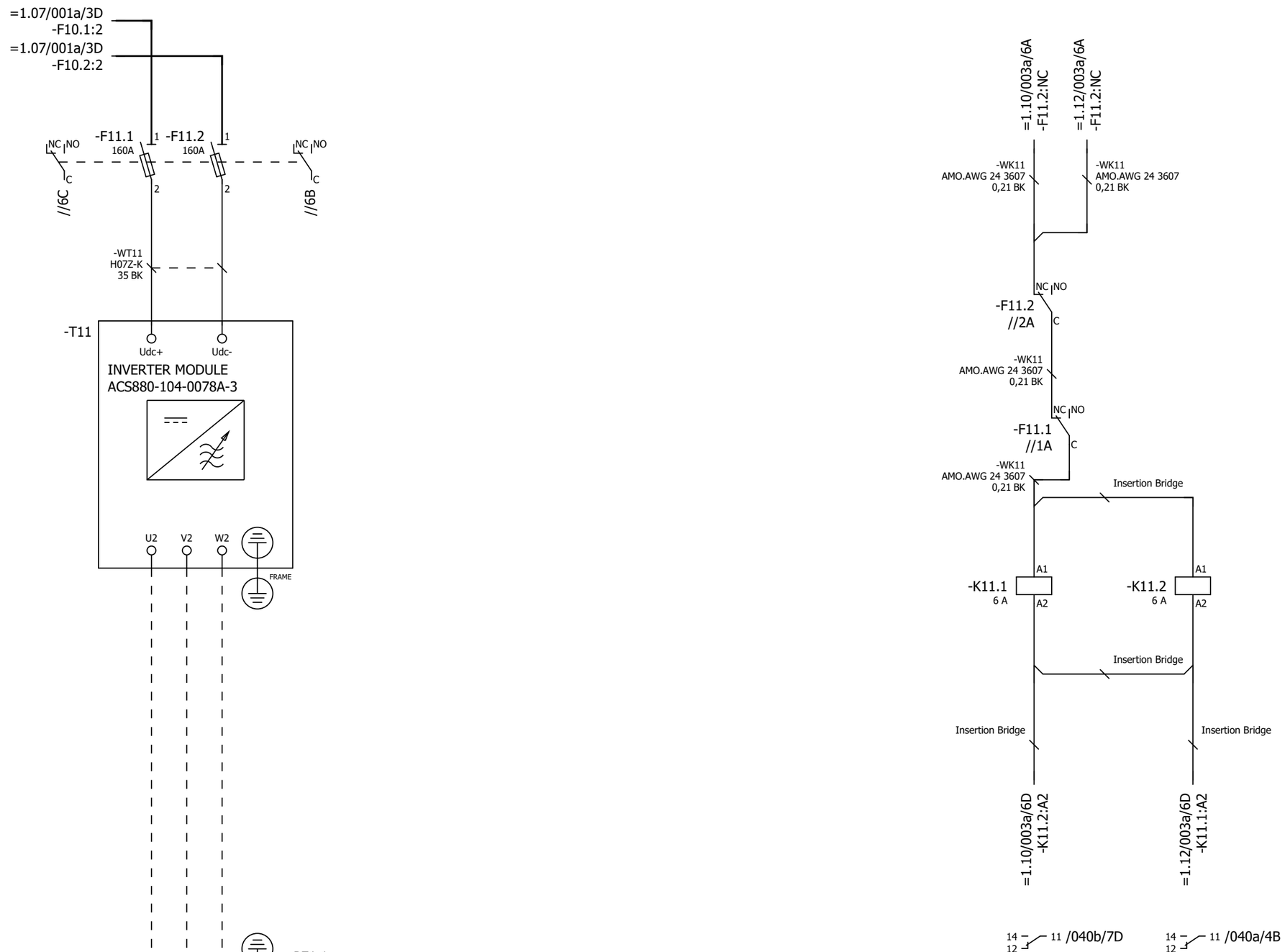

P345812 / 29711

Cust. Doc. No.	Prep. Sky-Xin Zhang 02.08.2023	Title MAIN CIRCUIT	Circuit diagram EFS2
Cust. Ref. No.	App.	INV1.11	SAP Doc. No.
Customer WMMP	Project Zhaka Jack-up Lift System	ACS880-107-0078A-3	EPLAN Doc. No. 3ABDC230674 - 1.11
	Zhaka Jack-up Lift System-1	400V	ABB Ref. No.
			Resp. Dept.

Item Des.
= 1.11
+ 1.07.1

Rev. .1 Sheet 003a
Cont. 040a

Control and status signals	Terminal	Pin
E-STOP FEEDBACK 1 - ESTOP ACTIVE	-XRO1	12
RUNNING 1 - RUNNING	-XRO2	22
FAULT (-1) 1 - NO FAULT	-XRO3	32

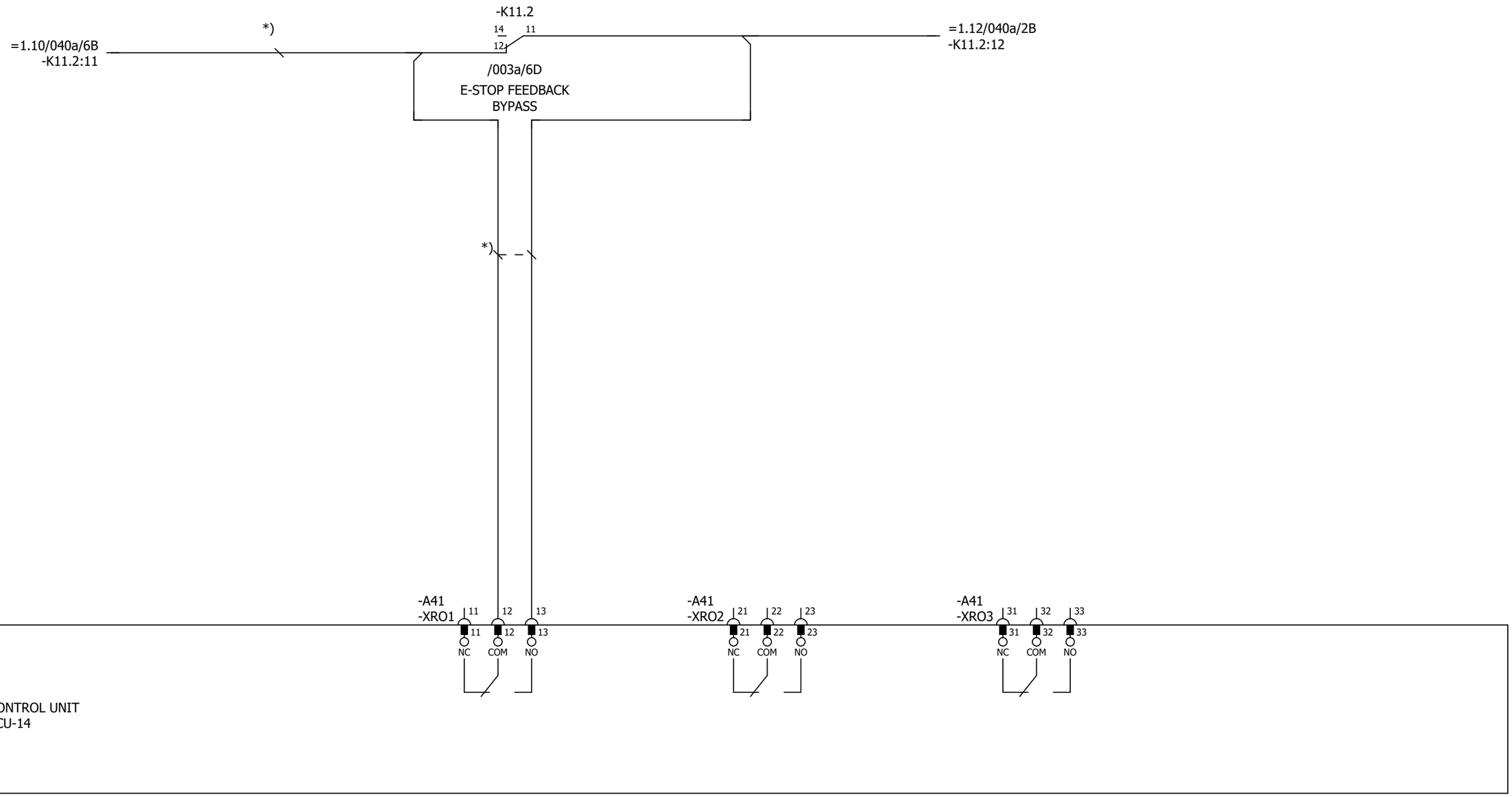

Cust. Doc. No.	Prep. Sky-Xin Zhang 02.08.2023	Title CONTROL BOARD INV1.11 ACS880-107-0078A-3 400V	Circuit diagram EFS2
Cust. Ref. No.	App.		SAP Doc. No.
Customer WMMP	Project Zhaka Jack-up Lift System Zhaka Jack-up Lift System-1		EPLAN Doc. No. 3ABDC230674 - 1.11
			ABB Ref. No.
			Resp. Dept.

Item Des.
= 1.11
+ 1.07.1

Rev. .1 Sheet 040a
Cont. 040b

Control and status signals	Terminal	Pin
DIGITAL INTERLOCK	-XD24	1
START/STOP 1 - START	-XDI	1
FORWARD/REVERSE 1 - REVERSE	-XDI	2
RESET	-XDI	3
EMERGENCY STOP 0 - ACTIVE	-XDI	4
NOT SPECIFIED	-XDI	5
DI6 NOT IN USE	-XDI	6
OUTPUT: READY	-XDIO	1
OUTPUT: RUNNING	-XDIO	2

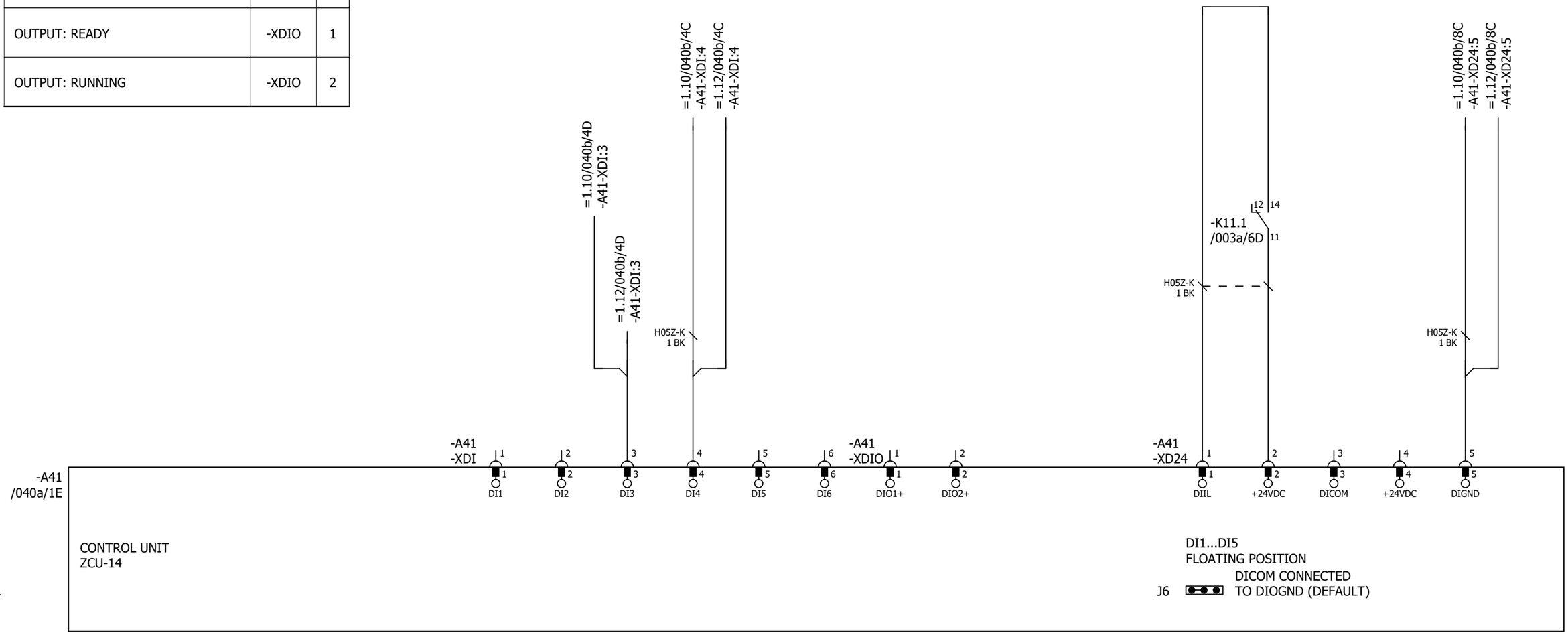

P345812 / 29711

Cust. Doc. No.	Prep. Sky-Xin Zhang 02.08.2023	Title CONTROL BOARD INV1.11 ACS880-107-0078A-3 400V	Circuit diagram EFS2
Cust. Ref. No.	App.		SAP Doc. No.
Customer WMMP	Project Zhaka Jack-up Lift System Zhaka Jack-up Lift System-1		EPLAN Doc. No. 3ABDC230674 - 1.11
			ABB Ref. No.
			Resp. Dept.

Item Des.
= 1.11
+ 1.07.1

Rev. .1 Sheet 040b
Cont. 040c

Control and status signals	Terminal	Pin
MOTOR TEMP. MONITORING 0(2)…10V	-XAI	4
AI2 NOT SPECIFIED BY DEFAULT NOT IN USE 0(4)…20mA	-XAI	6
CURR SOU MOT TEMP MONIT 0(4)...20mA	-XAO	1
CURRENT 0(4)…20mA ↔ 0(4)…MOTOR CURRENT	-XAO	3

P345812 / 29711

Cust. Doc. No.	Prep. Sky-Xin Zhang 02.08.2023	Title CONTROL BOARD INV1.11 ACS880-107-0078A-3 400V	Circuit diagram EFS2
Cust. Ref. No.	App.		SAP Doc. No.
Customer WMMP	Project Zhaka Jack-up Lift System Zhaka Jack-up Lift System-1		EPLAN Doc. No. 3ABDC230674 - 1.11
			ABB Ref. No.
			Resp. Dept.

Item Des.
= 1.11
+ 1.07.1

Rev. .1 Sheet 040c
Cont. 040d

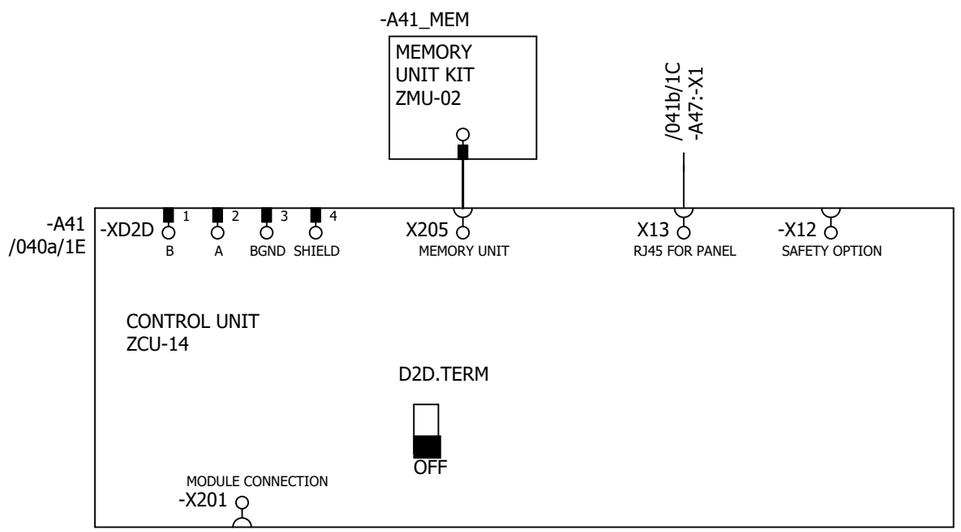

P345812 / 29711

Cust. Doc. No.	Prep. Sky-Xin Zhang 02.08.2023	Title CONTROL BOARD INV1.11 ACS880-107-0078A-3 400V	Circuit diagram EFS2
Cust. Ref. No.	App.		SAP Doc. No.
Customer WMMP	Project Zhaka Jack-up Lift System Zhaka Jack-up Lift System-1		EPLAN Doc. No. 3ABDC230674 - 1.11
			ABB Ref. No.
			Resp. Dept.

Item Des.
= 1.11
+ 1.07.1

Rev. .1 Sheet 040d
Cont. 041a

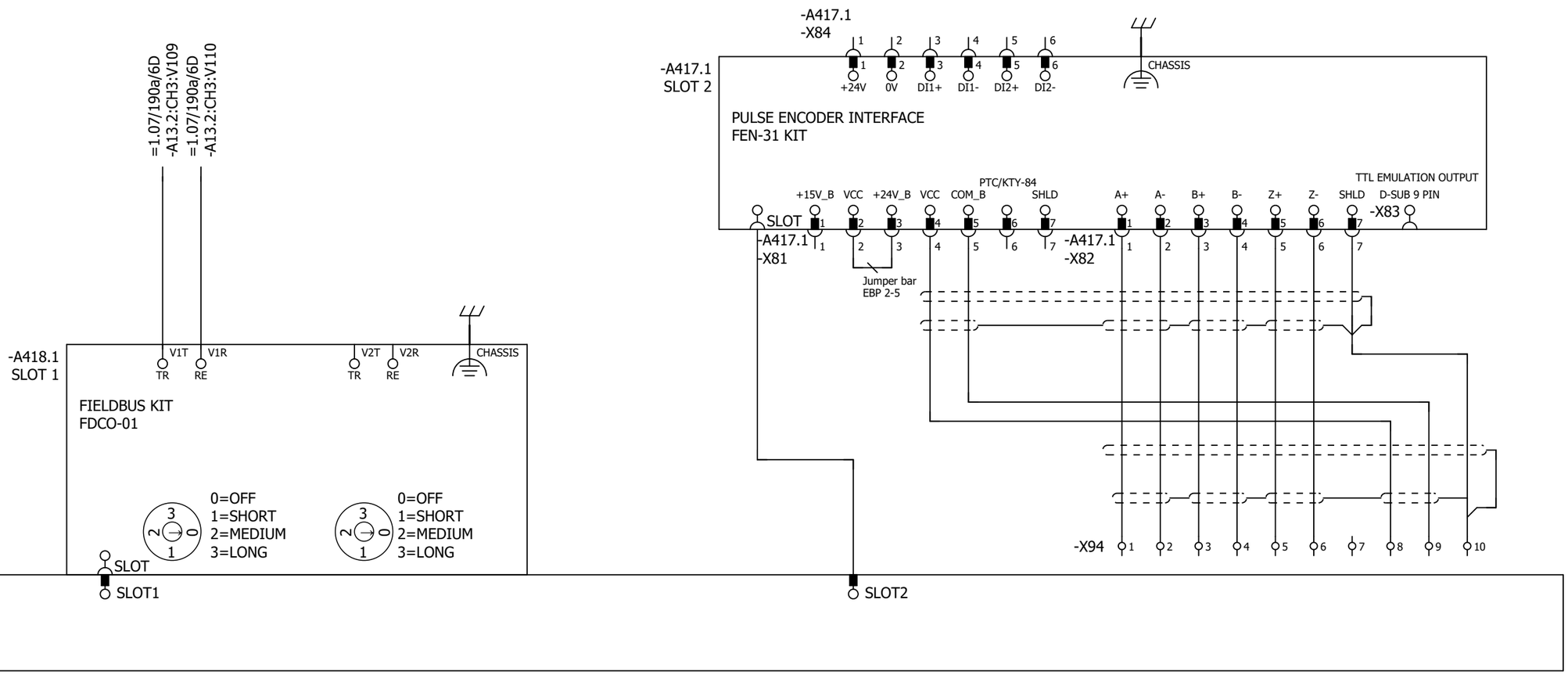

Cust. Doc. No.	Prep. Sky-Xin Zhang 02.08.2023	Title OPTION CARDS	Circuit diagram EFS2	Item Des.	
Cust. Ref. No.	App.	INV1.11	SAP Doc. No.	= 1.11	
Customer WMMP	Project Zhaka Jack-up Lift System	ACS880-107-0078A-3	EPLAN Doc. No. 3ABDC230674 - 1.11	+ 1.07.1	
	Zhaka Jack-up Lift System-1	400V	ABB Ref. No.	Rev. .1	Sheet 041a
			Resp. Dept.	Cont.	041b

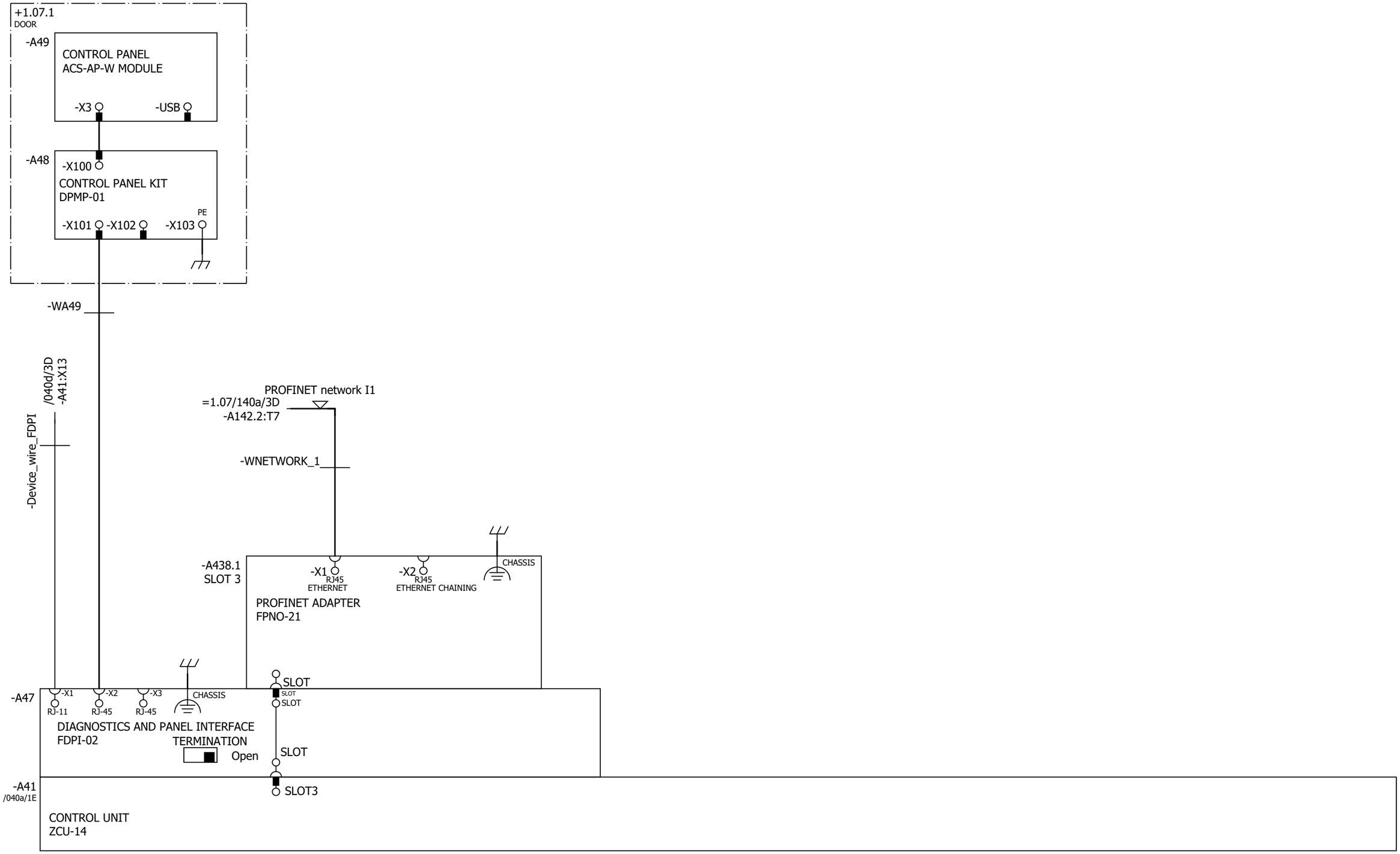

Cust. Doc. No.	Prep. Sky-Xin Zhang 02.08.2023	Title OPTION CARDS	Circuit diagram EFS2	Item Des.	
Cust. Ref. No.	App.	INV1.11	SAP Doc. No.	= 1.11	
Customer WMMP	Project Zhaka Jack-up Lift System	ACS880-107-0078A-3	EPLAN Doc. No. 3ABDC230674 - 1.11	+ 1.07.1	
		400V	ABB Ref. No.	Rev. .1	Sheet 041b
	Zhaka Jack-up Lift System-1		Resp. Dept.	Cont.	061a

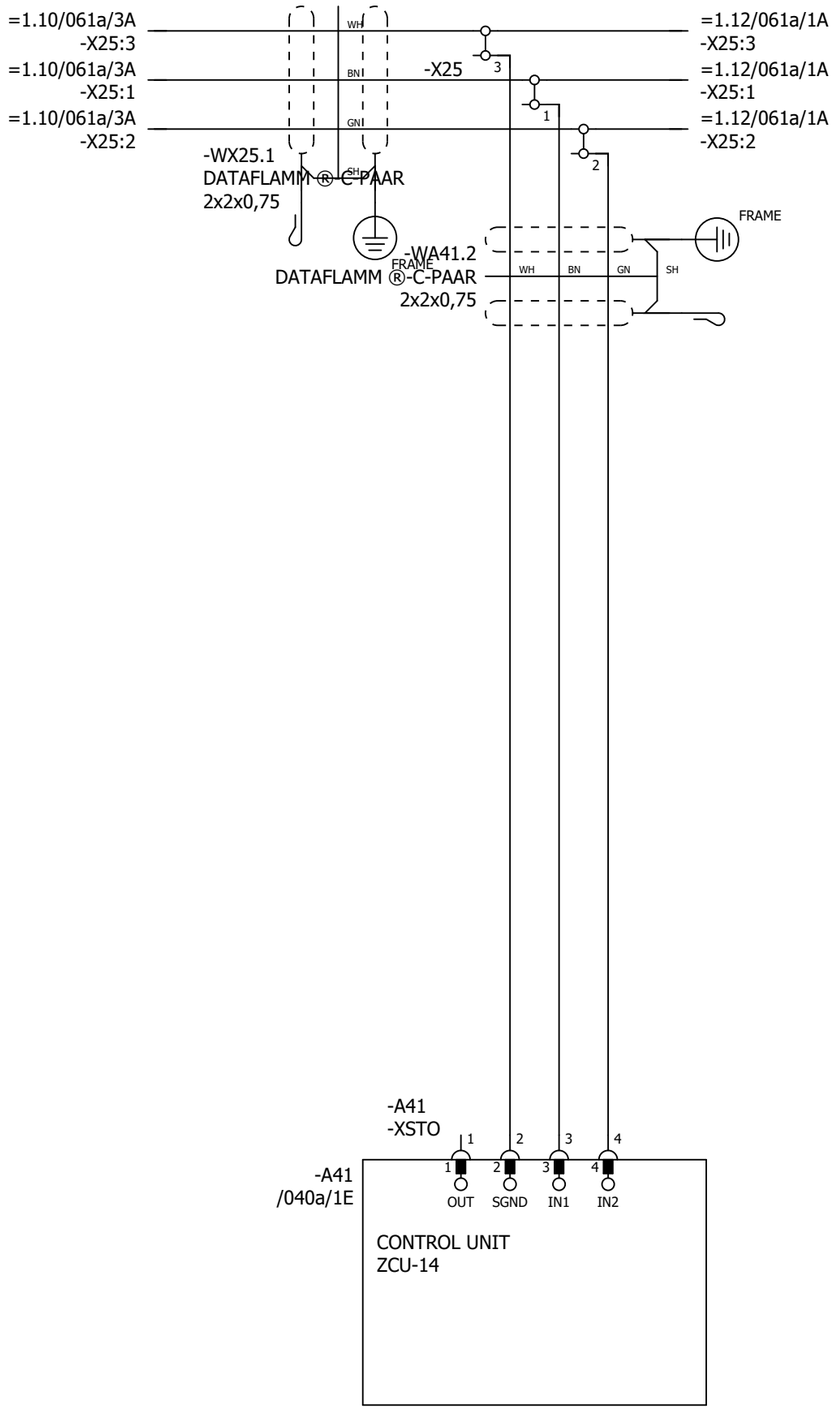

P345812 / 29711

SAFETY CIRCUIT
MACRO REVISION 6
RULES CONVERTED 19.7.2023

Cust. Doc. No.	Prep. Sky-Xin Zhang 02.08.2023	Title SAFETY CIRCUIT	Circuit diagram EFS2	Item Des.	
Cust. Ref. No.	App.	INV1.11	SAP Doc. No.	= 1.11	
Customer WMMP	Project Zhaka Jack-up Lift System	ACS880-107-0078A-3	EPLAN Doc. No. 3ABDC230674 - 1.11	+ 1.07.1	
	Zhaka Jack-up Lift System-1	400V	ABB Ref. No.	Rev. .1	Sheet 061a
			Resp. Dept.	Cont.	&MPC/Part list_1

Part list: 3ABDC230674DU01011

Item	Sort String	Qty.Str	Unit	Component Number	Description and text	Technical data
0010		1.000	ST		ACS880-107-0078A-3+A012+B053+C121+C132+	
0020		1.000	ST		_C206+E210+F272+F287+F288+G300+G307+G315	
0030		1.000	ST		_+G320+G330+G344+H352+H367+K450+K492+L50	
0040		1.000	ST		_2+L503+P913+Q964	
0050		1.000	ST		=1.11	
0060		1.000	ST		+1.07.1,INU3	
0070		1.000	ST		Powerconversionequipment	
0080	-A41_MEM	1.000	PC	3AXD50000006010	MEMORY UNIT KIT ZMU-02	
0090	-T11	1.000	PC	3AUA0000120009-M	ACS880-104-0078A-3+P922	+P922
0100	SCREW	1.000	PC	3AFE68681481	SCREW K30X10 TORX	PT WN1452 ZN
0110	SOFTWARE	1.000	PC	3AUA0000153462	SOFTWARE PRIMARY CONTROL PROGRA	AINF6 FOR ZCU-12/14
0120		1.000	ST		R4imoduleDCfuse	
0130	-F11.1-2	2.000	PC	3AXD50000000219	FUSE FR27UQ69V160T/160A	6.921 CP URQ 27X60MM FERRULE;AR
0140		1.000	ST		R3i-R4imoduleDCfusebase	
0150	(-F11.1-2)	2.000	PC	3AUA0000089227	FUSE HOLDER FUSE BASE US271MI 150A	FUSE BASE US271MI 150A 800V
0160		1.000	ST		24VDCsupplyZCU	
0170	-WA41_1	1.000	PC	3AXD50000005218	WIRE HARNESS 24VDC SUPPLY X51 ZCU V	HALOGEN FREE;X51_A51
0180		1.000	ST		Rooffancontrol	
0190	-WA41_3	1.000	PC	3AXD50000002688	WIRE HARNESS FAN CONTROL MAIN WIRE	HALOGEN FREE;X208_X26.3
0200		1.000	ST		Bottomrowmodulewireharness	
0210	-WT11	1.000	PC	3AXD50000002418	WIRE HARNESS R4I FUSE_MODULE BR V2	HALOGEN FREE;MAIN CIRCUIT WIRE SET
0220		1.000	ST		Encoder	
0230	-A417.1	1.000	PC	3AFE68978955	COMMUNIC. ADAPTER FEN-31	FEN-31
0240		1.000	ST		Optionmodule	
0250	-A418.1	1.000	PC	3AUA0000107392	COMMUNIC. ADAPTER FDCO-01	
0260		1.000	ST		Controlpanel	
0270	-A47	1.000	PC	3AUA0000108650	FIELDBUS KIT FDPI-02	PANEL BUS ADAPTER
0280		1.000	ST		DCfusesupervision	
0290	-K11.1-2	2.000	PC	3AXD50000021313	RELAY DEK_REL_G24/21	250 V;6 A;COIL 24VDC
0300		1.000	ST		FieldBus	
0310	-A438.1	1.000	PC	3AXD50000192779	OPTION MODULE FPNO-21	PROFINET IO
0320		1.000	ST		Supplementtorelay	
0330	(-K11.1)	1.000	PC	3AXD50000021312	TERMINAL BLOCK ST EB2_DIK_RD 2716693	2POLE, 6,15 MM PITCH;FOR DEK RELAYS

P345812 / 29711

Cust. Doc. No.	Prep.	Title PART LIST INV1.11 ACS880-107-0078A-3 400V	Item Des. = 1.11 +
Cust. Ref. No.	App.		SAP Doc. No.
Customer WMMP	Project Zhaka Jack-up Lift System Zhaka Jack-up Lift System-1		EPLAN Doc. No. 3ABDC230674 - 1.11
			ABB Ref. No. / Rev. / Sheet Part list_1
			Resp. Dept. / Cont. &EMA/1

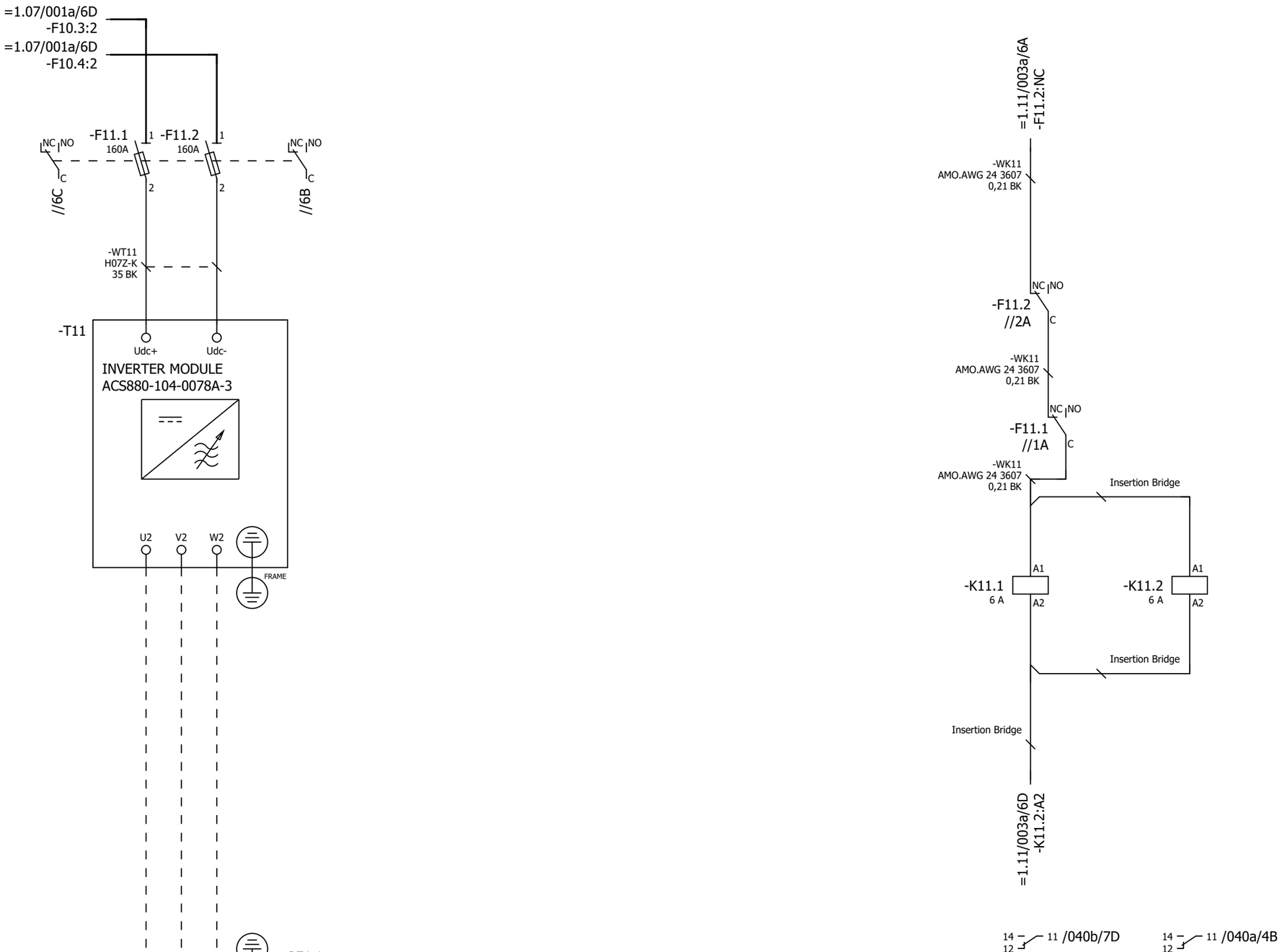

P345812 / 29711

Cust. Doc. No.	Prep. Sky-Xin Zhang 02.08.2023	Title MAIN CIRCUIT	Circuit diagram EFS2
Cust. Ref. No.	App.	INV1.12	SAP Doc. No.
Customer WMMP	Project Zhaka Jack-up Lift System	ACS880-107-0078A-3	EPLAN Doc. No. 3ABDC230674 - 1.12
	Zhaka Jack-up Lift System-1	400V	ABB Ref. No.
			Resp. Dept.

Item Des.
= 1.12
+ 1.07.1

Rev. .1 Sheet 003a
Cont. 040a

Control and status signals	Terminal	Pin
E-STOP FEEDBACK 1 - ESTOP ACTIVE	-XRO1	12
RUNNING 1 - RUNNING	-XRO2	22
FAULT (-1) 1 - NO FAULT	-XRO3	32

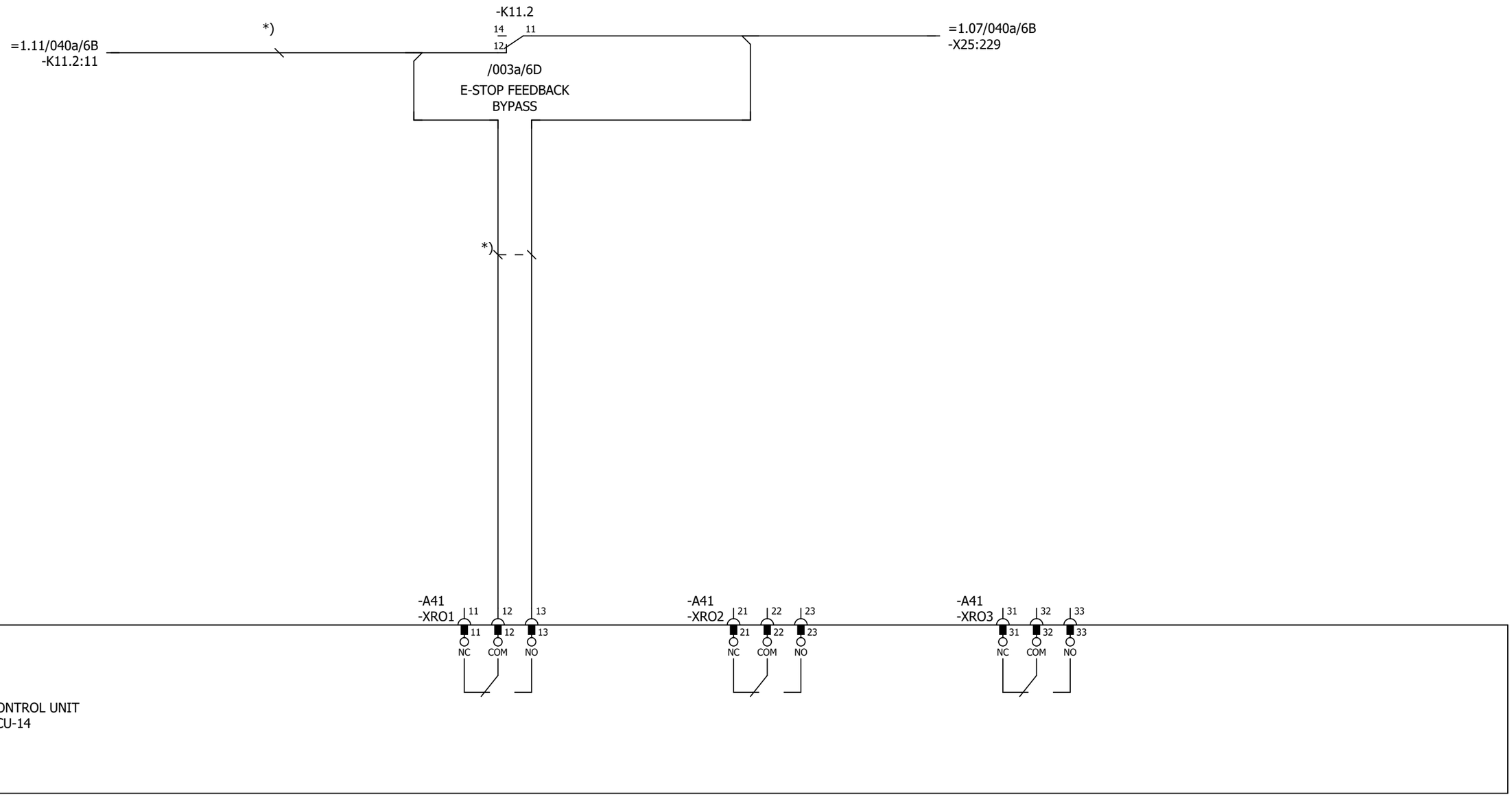

Cust. Doc. No.	Prep. Sky-Xin Zhang 02.08.2023	Title CONTROL BOARD INV1.12 ACS880-107-0078A-3 400V	Circuit diagram EFS2	Item Des.	
Cust. Ref. No.	App.		SAP Doc. No.	= 1.12 + 1.07.1	
Customer WMMP	Project Zhaka Jack-up Lift System Zhaka Jack-up Lift System-1	ABB	EPLAN Doc. No. 3ABDC230674 - 1.12		
			ABB Ref. No.	Rev. .1	Sheet 040a
			Resp. Dept.	Cont.	040b

Control and status signals	Terminal	Pin
DIGITAL INTERLOCK	-XD24	1
START/STOP 1 - START	-XDI	1
FORWARD/REVERSE 1 - REVERSE	-XDI	2
RESET	-XDI	3
EMERGENCY STOP 0 - ACTIVE	-XDI	4
NOT SPECIFIED	-XDI	5
DI6 NOT IN USE	-XDI	6
OUTPUT: READY	-XDIO	1
OUTPUT: RUNNING	-XDIO	2

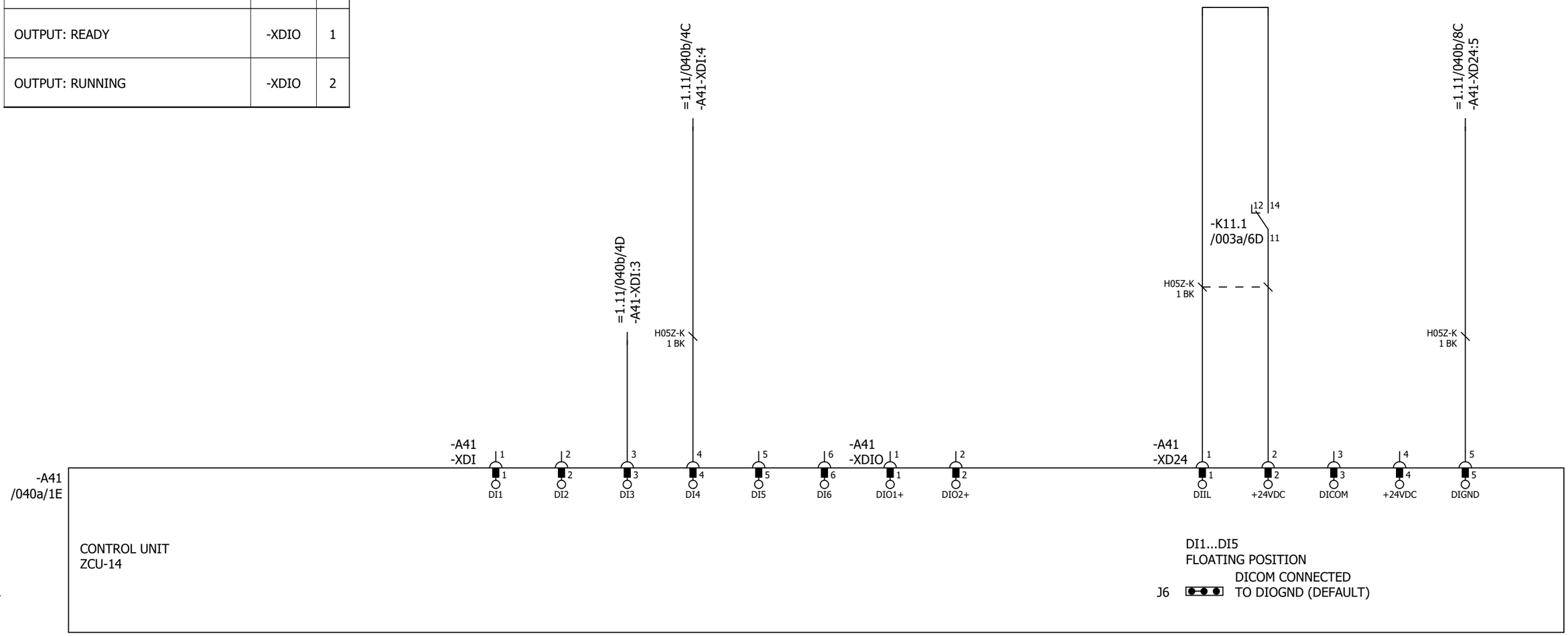

Cust. Doc. No.	Prep. Sky-Xin Zhang 02.08.2023	Title CONTROL BOARD INV1.12 ACS880-107-0078A-3 400V	Circuit diagram EFS2
Cust. Ref. No.	App.		SAP Doc. No.
Customer WMMP	Project Zhaka Jack-up Lift System Zhaka Jack-up Lift System-1		EPLAN Doc. No. 3ABDC230674 - 1.12
			ABB Ref. No.
			Resp. Dept.

Item Des.
= 1.12
+ 1.07.1

Rev. .1 Sheet 040b
Cont. 040c

Control and status signals	Terminal	Pin
MOTOR TEMP. MONITORING 0(2)…10V	-XAI	4
AI2 NOT SPECIFIED BY DEFAULT NOT IN USE 0(4)…20mA	-XAI	6
CURR SOU MOT TEMP MONIT 0(4)...20mA	-XAO	1
CURRENT 0(4)…20mA ↔ 0(4)…MOTOR CURRENT	-XAO	3

P345812 / 29711

Cust. Doc. No.	Prep. Sky-Xin Zhang 02.08.2023	Title CONTROL BOARD INV1.12 ACS880-107-0078A-3 400V	Circuit diagram EFS2
Cust. Ref. No.	App.		SAP Doc. No.
Customer WMMP	Project Zhaka Jack-up Lift System Zhaka Jack-up Lift System-1		EPLAN Doc. No. 3ABDC230674 - 1.12
			ABB Ref. No.
			Resp. Dept.

Item Des.
= 1.12
+ 1.07.1

Rev. .1 Sheet 040c
Cont. 040d

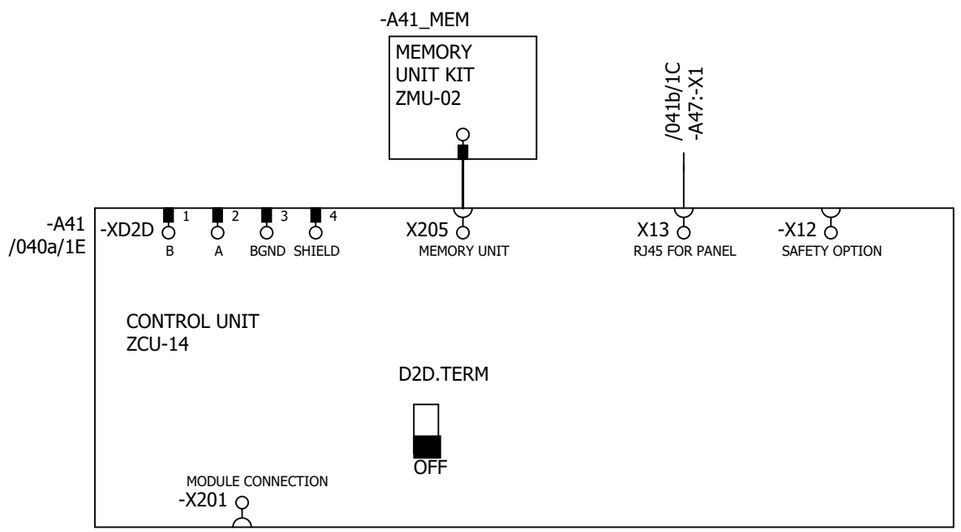

P345812 / 29711

Cust. Doc. No.	Prep. Sky-Xin Zhang 02.08.2023	Title CONTROL BOARD INV1.12 ACS880-107-0078A-3 400V	Circuit diagram EFS2
Cust. Ref. No.	App.		SAP Doc. No.
Customer WMMP	Project Zhaka Jack-up Lift System Zhaka Jack-up Lift System-1		EPLAN Doc. No. 3ABDC230674 - 1.12
			ABB Ref. No.
			Resp. Dept.

Item Des.
= 1.12
+ 1.07.1

Rev. .1 Sheet 040d
Cont. 041a

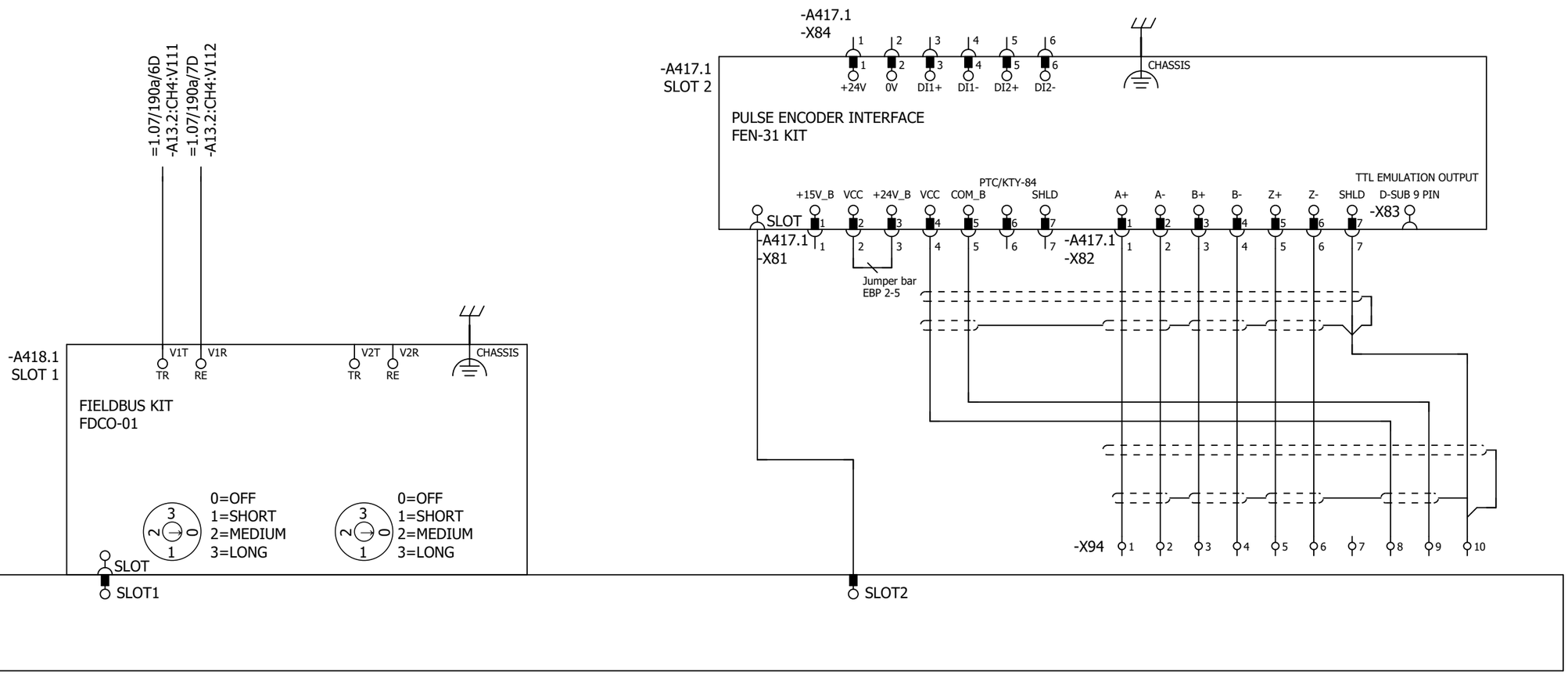

Cust. Doc. No.	Prep. Sky-Xin Zhang 02.08.2023	Title OPTION CARDS	Circuit diagram EFS2	Item Des.	
Cust. Ref. No.	App.	INV1.12	SAP Doc. No.	= 1.12	
Customer WMMP	Project Zhaka Jack-up Lift System	ACS880-107-0078A-3	EPLAN Doc. No. 3ABDC230674 - 1.12	+ 1.07.1	
	Zhaka Jack-up Lift System-1	400V	ABB Ref. No.	Rev. .1	Sheet 041a
			Resp. Dept.	Cont.	041b

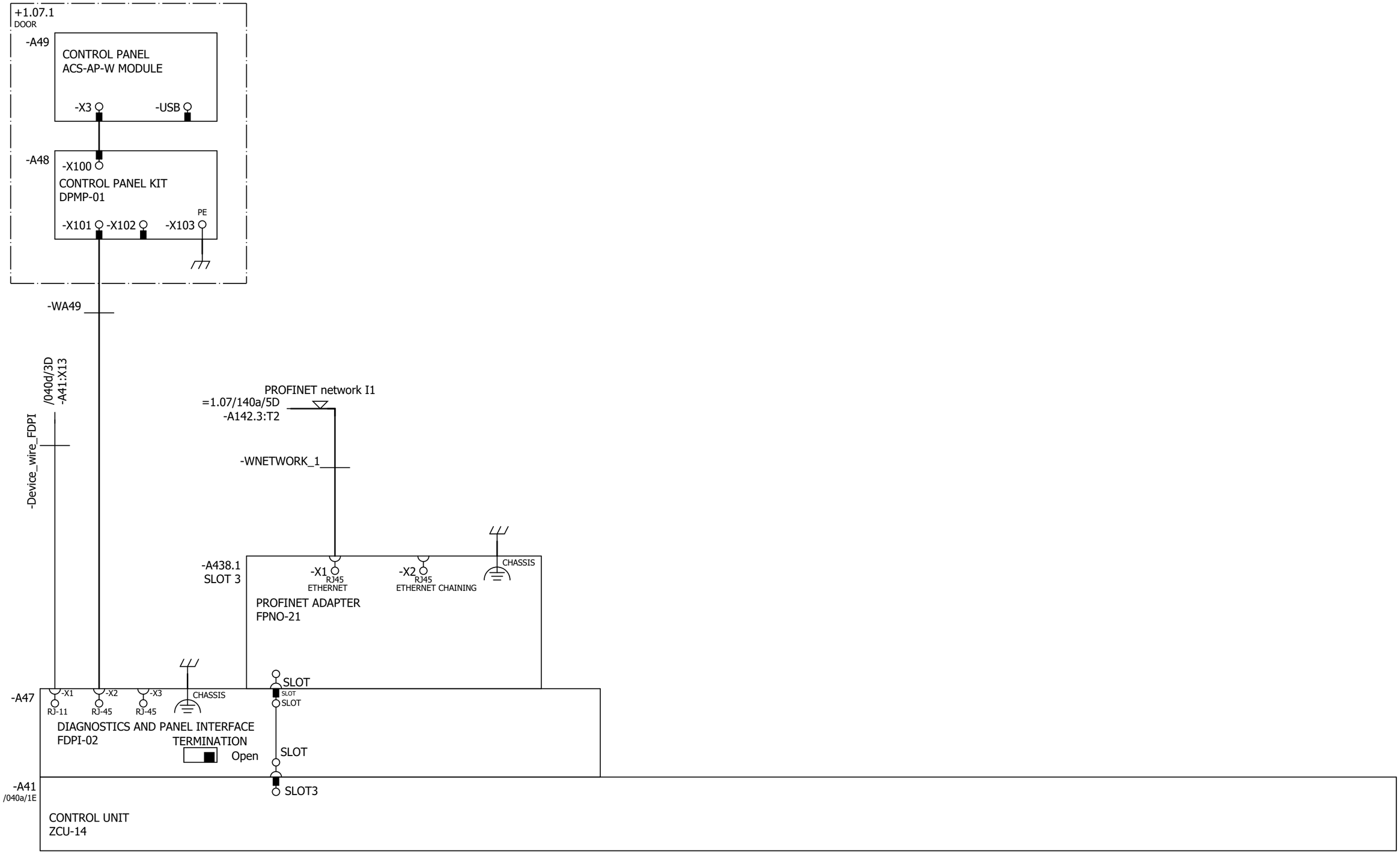

Cust. Doc. No.	Prep. Sky-Xin Zhang 02.08.2023	Title OPTION CARDS	Circuit diagram EFS2	Item Des.	
Cust. Ref. No.	App.	INV1.12	SAP Doc. No.	= 1.12	
Customer WMMP	Project Zhaka Jack-up Lift System	ACS880-107-0078A-3	EPLAN Doc. No. 3ABDC230674 - 1.12	+ 1.07.1	
		400V	ABB Ref. No.	Rev. .1	Sheet 041b
	Zhaka Jack-up Lift System-1		Resp. Dept.	Cont.	061a

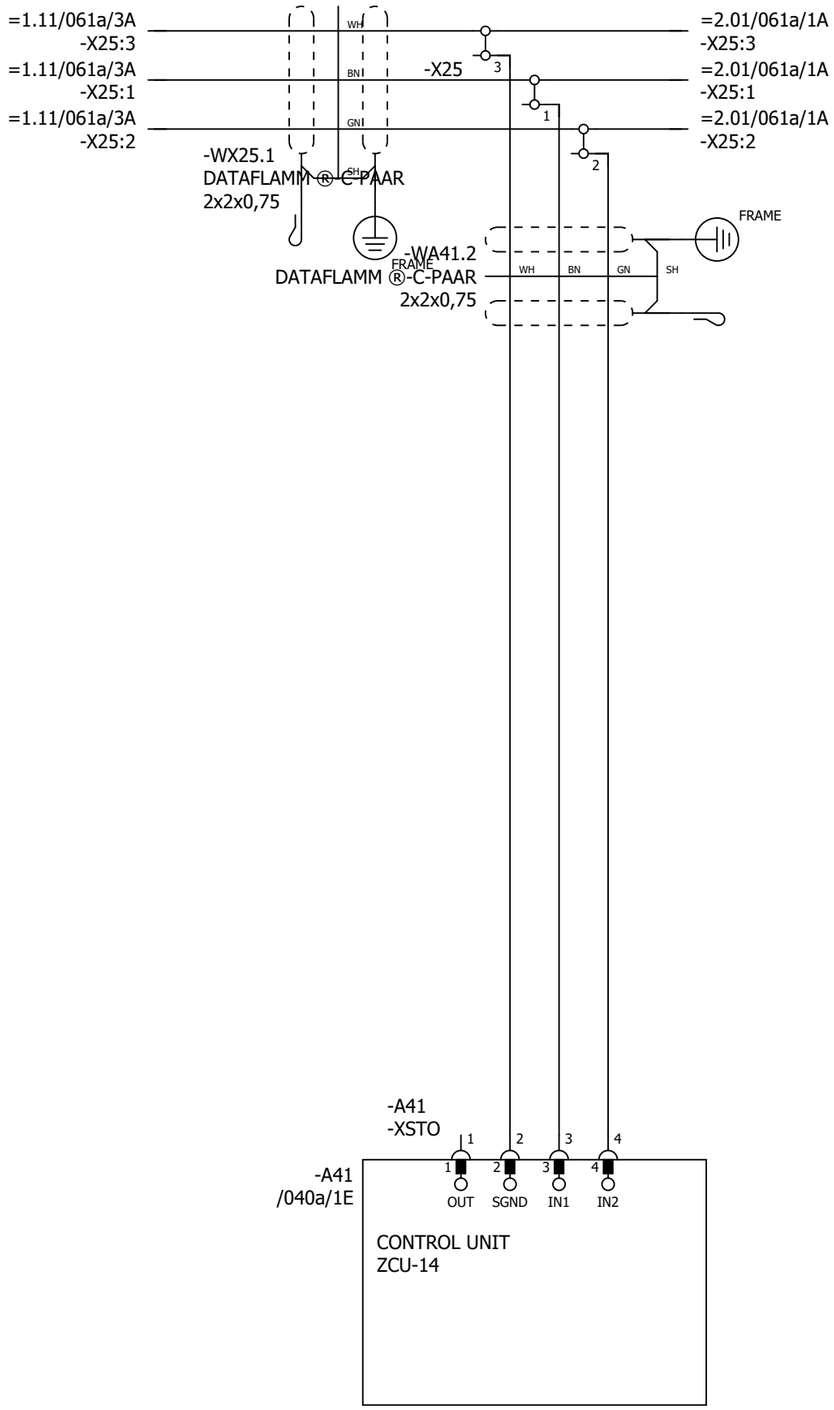

P345812 / 29711

SAFETY CIRCUIT
MACRO REVISION 6
RULES CONVERTED 19.7.2023

Cust. Doc. No.	Prep. Sky-Xin Zhang 02.08.2023	Title SAFETY CIRCUIT INV1.12 ACS880-107-0078A-3 400V	Circuit diagram EFS2
Cust. Ref. No.	App.		SAP Doc. No.
Customer WMMP	Project Zhaka Jack-up Lift System Zhaka Jack-up Lift System-1		EPLAN Doc. No. 3ABDC230674 - 1.12
			ABB Ref. No.
			Resp. Dept.

Item Des.	= 1.12 + 1.07.1
Rev. .1	Sheet 061a
Cont.	&MPC/Part list_1

Part list: 3ABDC230674DU01012

Item	Sort String	Qty.Str	Unit	Component Number	Description and text	Technical data
0010		1.000	ST		ACS880-107-0078A-3+A012+B053+C121+C132+	
0020		1.000	ST		_C206+E210+F272+F287+F288+G300+G307+G315	
0030		1.000	ST		_+G320+G330+G344+H352+H367+K450+K492+L50	
0040		1.000	ST		_2+L503+P913+Q964	
0050		1.000	ST		=1.12	
0060		1.000	ST		+1.07.1,INU3	
0070		1.000	ST		Powerconversionequipment	
0080	-A41_MEM	1.000	PC	3AXD50000006010	MEMORY UNIT KIT ZMU-02	
0090	-T11	1.000	PC	3AUA0000120009-M	ACS880-104-0078A-3+P922	+P922
0100	SCREW	1.000	PC	3AFE68681481	SCREW K30X10 TORX	PT WN1452 ZN
0110	SOFTWARE	1.000	PC	3AUA0000153462	SOFTWARE PRIMARY CONTROL PROGRA	AINF6 FOR ZCU-12/14
0120		1.000	ST		R4imoduleDCfuse	
0130	-F11.1-2	2.000	PC	3AXD50000000219	FUSE FR27UQ69V160T/160A	6.921 CP URQ 27X60MM FERRULE;AR
0140		1.000	ST		R3i-R4imoduleDCfusebase	
0150	(-F11.1-2)	2.000	PC	3AUA0000089227	FUSE HOLDER FUSE BASE US271MI 150A	FUSE BASE US271MI 150A 800V
0160		1.000	ST		24VDCsupplyZCU	
0170	-WA41_1	1.000	PC	3AXD50000005218	WIRE HARNESS 24VDC SUPPLY X51 ZCU V	HALOGEN FREE;X51_A51
0180		1.000	ST		Rooffancontrol	
0190	-WA41_3	1.000	PC	3AXD50000002688	WIRE HARNESS FAN CONTROL MAIN WIRE	HALOGEN FREE;X208_X26.3
0200		1.000	ST		Bottomrowmodulewireharness	
0210	-WT11	1.000	PC	3AXD50000002418	WIRE HARNESS R4I FUSE_MODULE BR V2	HALOGEN FREE;MAIN CIRCUIT WIRE SET
0220		1.000	ST		Encoder	
0230	-A417.1	1.000	PC	3AFE68978955	COMMUNIC. ADAPTER FEN-31	FEN-31
0240		1.000	ST		Optionmodule	
0250	-A418.1	1.000	PC	3AUA0000107392	COMMUNIC. ADAPTER FDCO-01	
0260		1.000	ST		Controlpanel	
0270	-A47	1.000	PC	3AUA0000108650	FIELDBUS KIT FDPI-02	PANEL BUS ADAPTER
0280		1.000	ST		DCfusesupervision	
0290	-K11.1-2	2.000	PC	3AXD50000021313	RELAY DEK_REL_G24/21	250 V;6 A;COIL 24VDC
0300		1.000	ST		FieldBus	
0310	-A438.1	1.000	PC	3AXD50000192779	OPTION MODULE FPNO-21	PROFINET IO
0320		1.000	ST		Supplementtorelay	
0330	(-K11.1)	1.000	PC	3AXD50000021312	TERMINAL BLOCK ST EB2_DIK_RD 2716693	2POLE, 6,15 MM PITCH;FOR DEK RELAYS

P345812 / 29711

Cust. Doc. No.	Prep.	Title PART LIST INV1.12 ACS880-107-0078A-3 400V	Item Des. = 1.12 +
Cust. Ref. No.	App.		SAP Doc. No.
Customer WMMP	Project Zhaka Jack-up Lift System Zhaka Jack-up Lift System-1		EPLAN Doc. No. 3ABDC230674 - 1.12
			ABB Ref. No. / Rev. / Sheet Part list_1
			Resp. Dept. / Cont. Part list_2

Part list: 3ABDC230674DU01012

Item	Sort String	Qty.Str	Unit	Component Number	Description and text	Technical data
0340		1.000	ST		+1.07.2,JNU	

P345812 / 29711

Cust. Doc. No.	Prep.	Title PART LIST INV1.12 ACS880-107-0078A-3 400V	Item Des. = 1.12 +
Cust. Ref. No.	App.		SAP Doc. No.
Customer WMMP	Project Zhaka Jack-up Lift System Zhaka Jack-up Lift System-1		EPLAN Doc. No. 3ABDC230674 - 1.12
			ABB Ref. No. / Rev. / Sheet Part list_2
			Resp. Dept. / Cont. &EMA/1

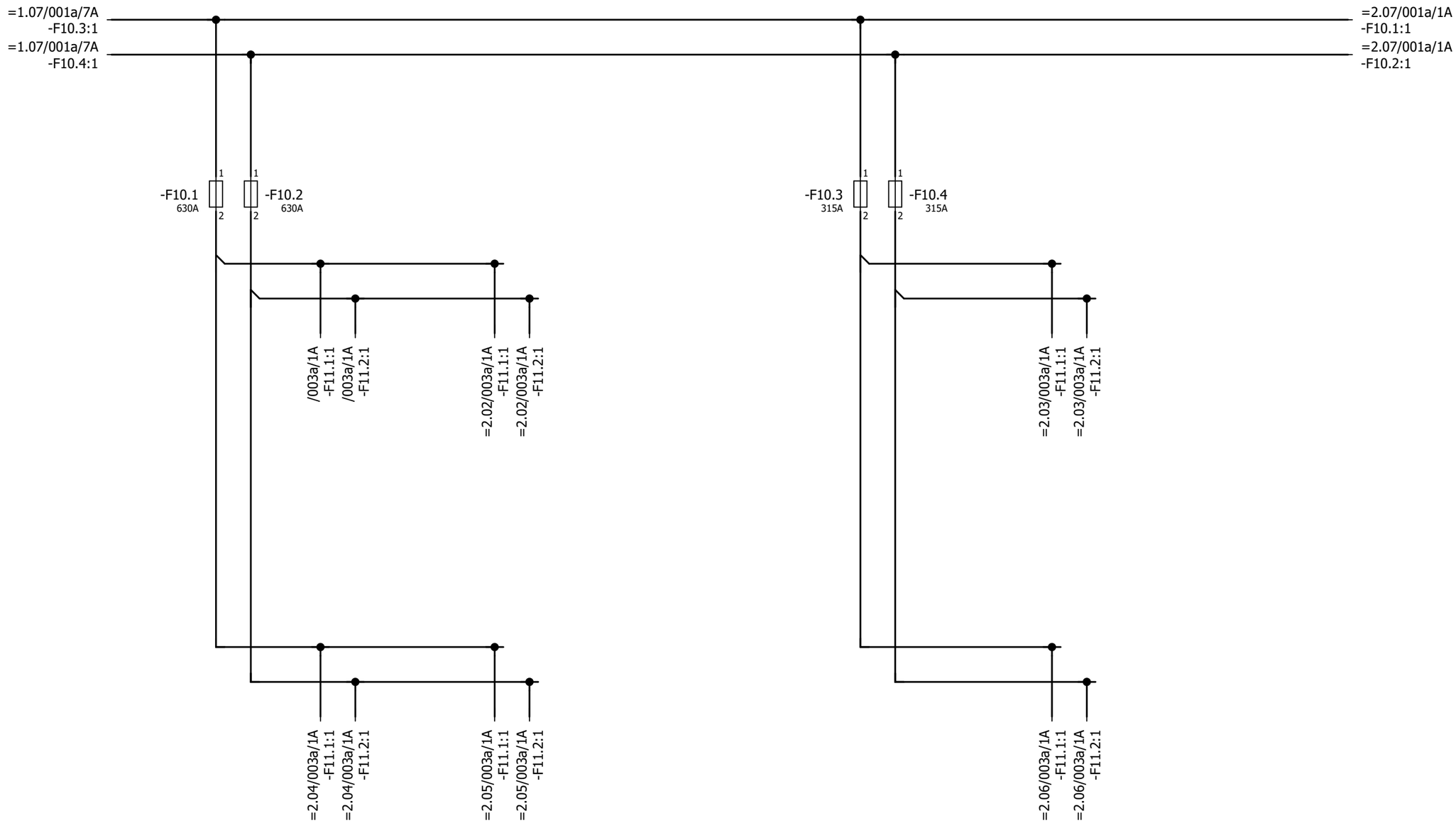

P345812 / 29711

Cust. Doc. No.	Prep. Sky-Xin Zhang 02.08.2023	Title MAIN CIRCUIT INV2.01 ACS880-107-0078A-3 400V	Circuit diagram EFS2
Cust. Ref. No.	App.		SAP Doc. No.
Customer WMMP	Project Zhaka Jack-up Lift System Zhaka Jack-up Lift System-1		EPLAN Doc. No. 3ABDC230674 - 2.01
			ABB Ref. No.
			Resp. Dept.

Item Des.
= 2.01
+ 2.01.1

Rev. .1 Sheet 001a
Cont. 003a

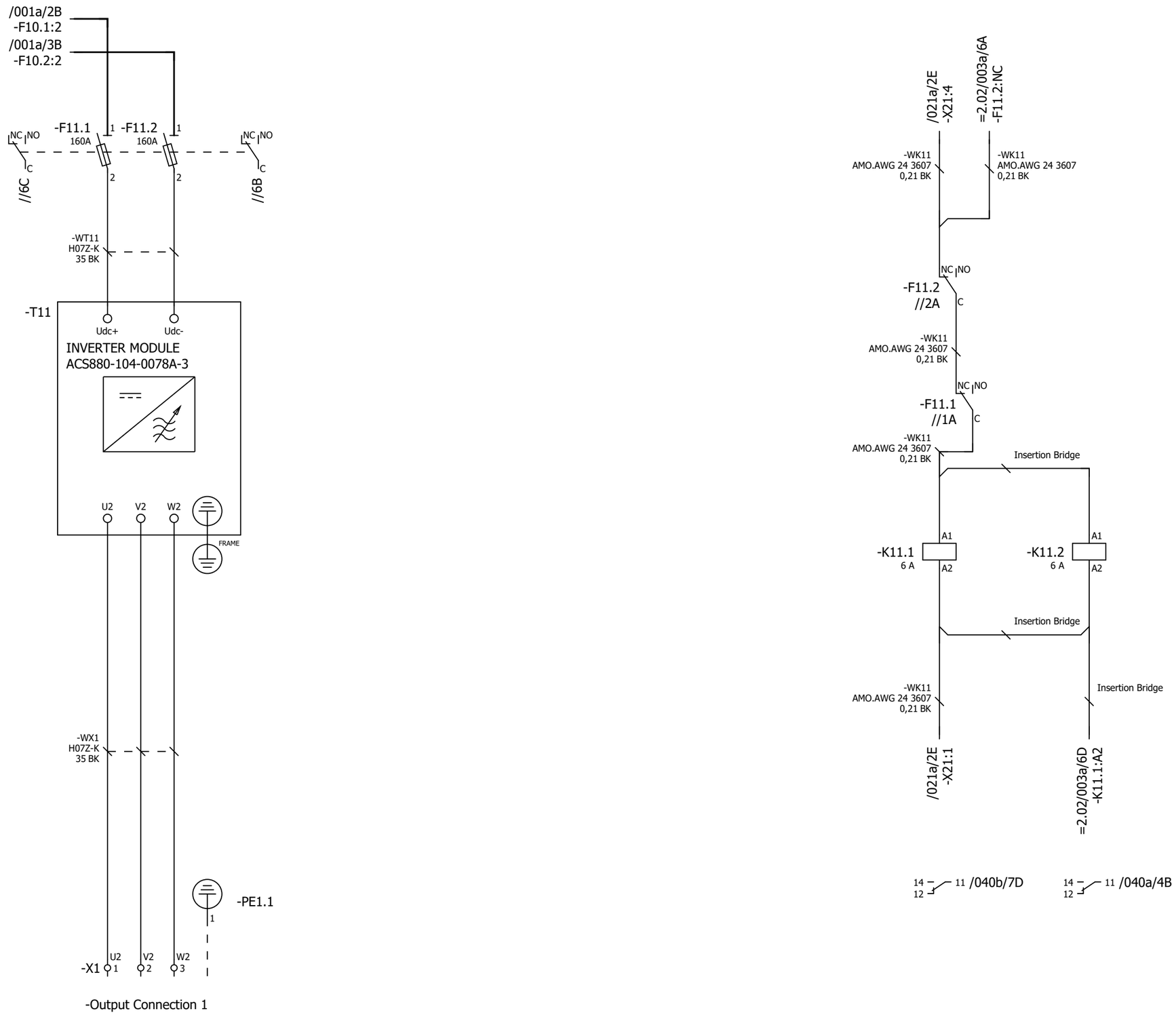

P345812 / 29711

Cust. Doc. No.	Prep. Sky-Xin Zhang 02.08.2023	Title MAIN CIRCUIT	Circuit diagram EFS2
Cust. Ref. No.	App.	INV2.01	SAP Doc. No.
Customer WMMP	Project Zhaka Jack-up Lift System	ACS880-107-0078A-3	EPLAN Doc. No. 3ABDC230674 - 2.01
	Zhaka Jack-up Lift System-1	400V	ABB Ref. No.
			Resp. Dept.

Item Des.
= 2.01
+ 2.01.1

Rev. .1 Sheet 003a
Cont. 013a

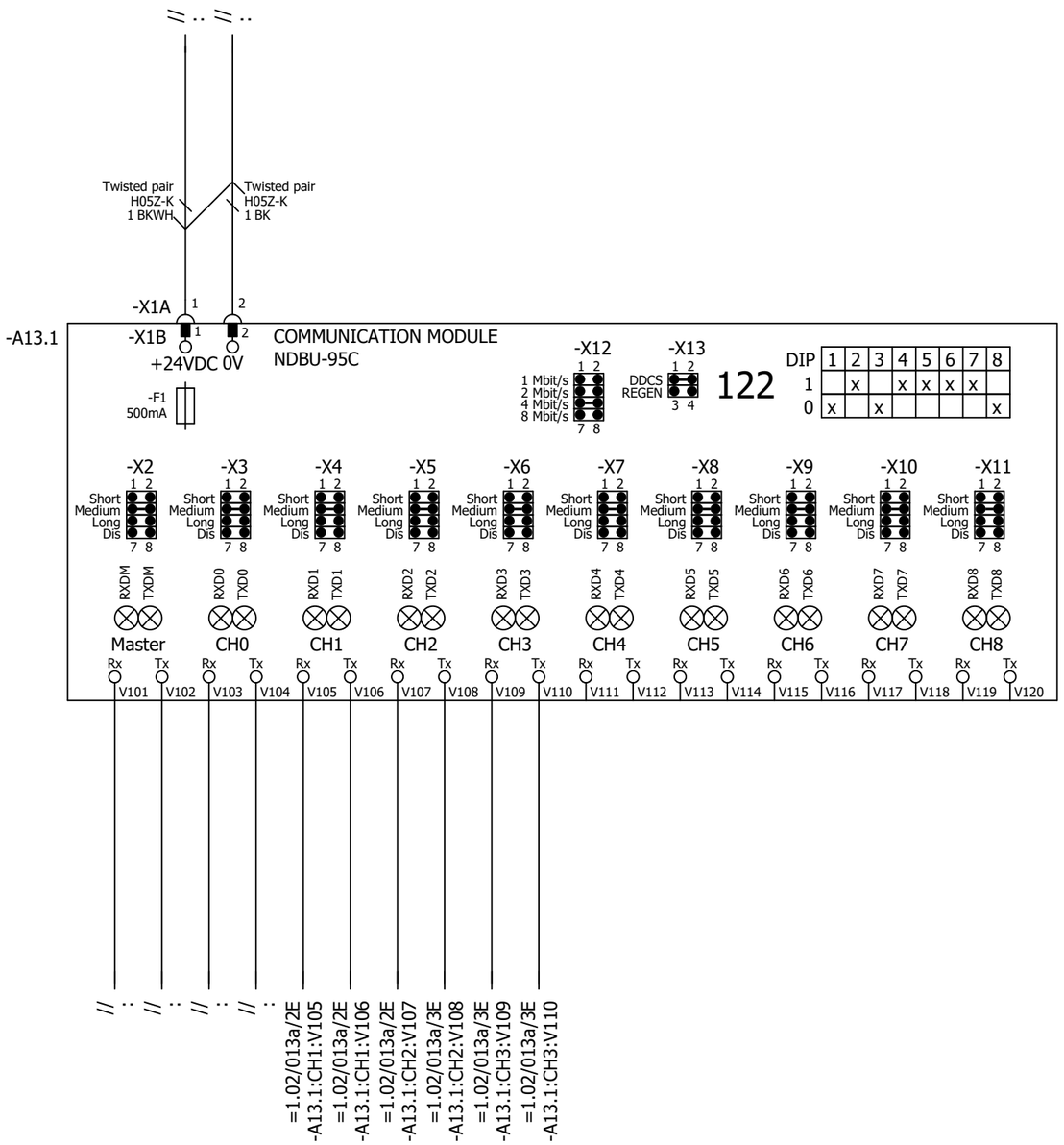

P345812 / 29711

Cust. Doc. No.	Prep. Sky-Xin Zhang 02.08.2023	Title DDCS BRANCHING UNIT	Circuit diagram EFS2
Cust. Ref. No.	App.	INV2.01	SAP Doc. No.
Customer WMMP	Project Zhaka Jack-up Lift System	ACS880-107-0078A-3	EPLAN Doc. No. 3ABDC230674 - 2.01
	Zhaka Jack-up Lift System-1	400V	ABB Ref. No.
			Resp. Dept.

Item Des. = 2.01 + 2.01.1

Rev. .1 Sheet 013a

Cont. 020a

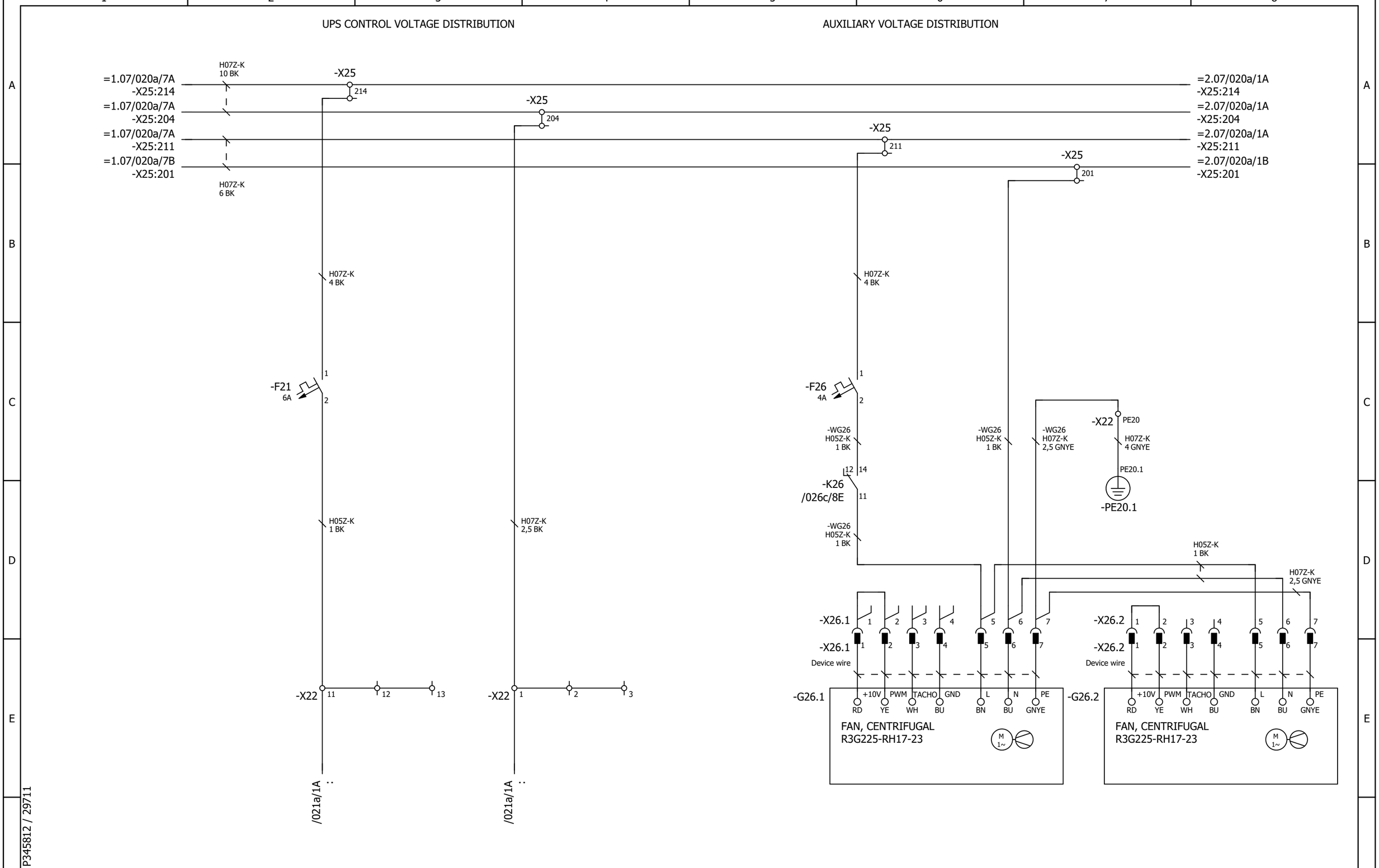

P345812 / 29711

Cust. Doc. No.	Prep. Sky-Xin Zhang 02.08.2023	Title AUXILIARY VOLTAGE DISTRIBUTION	Circuit diagram EFS2	Item Des.	
Cust. Ref. No.	App.	INV2.01	SAP Doc. No.	= 2.01	
Customer WMMP	Project Zhaka Jack-up Lift System	ACS880-107-0078A-3	EPLAN Doc. No. 3ABDC230674 - 2.01	+ 2.01.1	
	Zhaka Jack-up Lift System-1	400V	ABB Ref. No.	Rev. .1	Sheet 020a
			Resp. Dept.	Cont.	021a

24V CONTROL VOLTAGE DISTRIBUTION

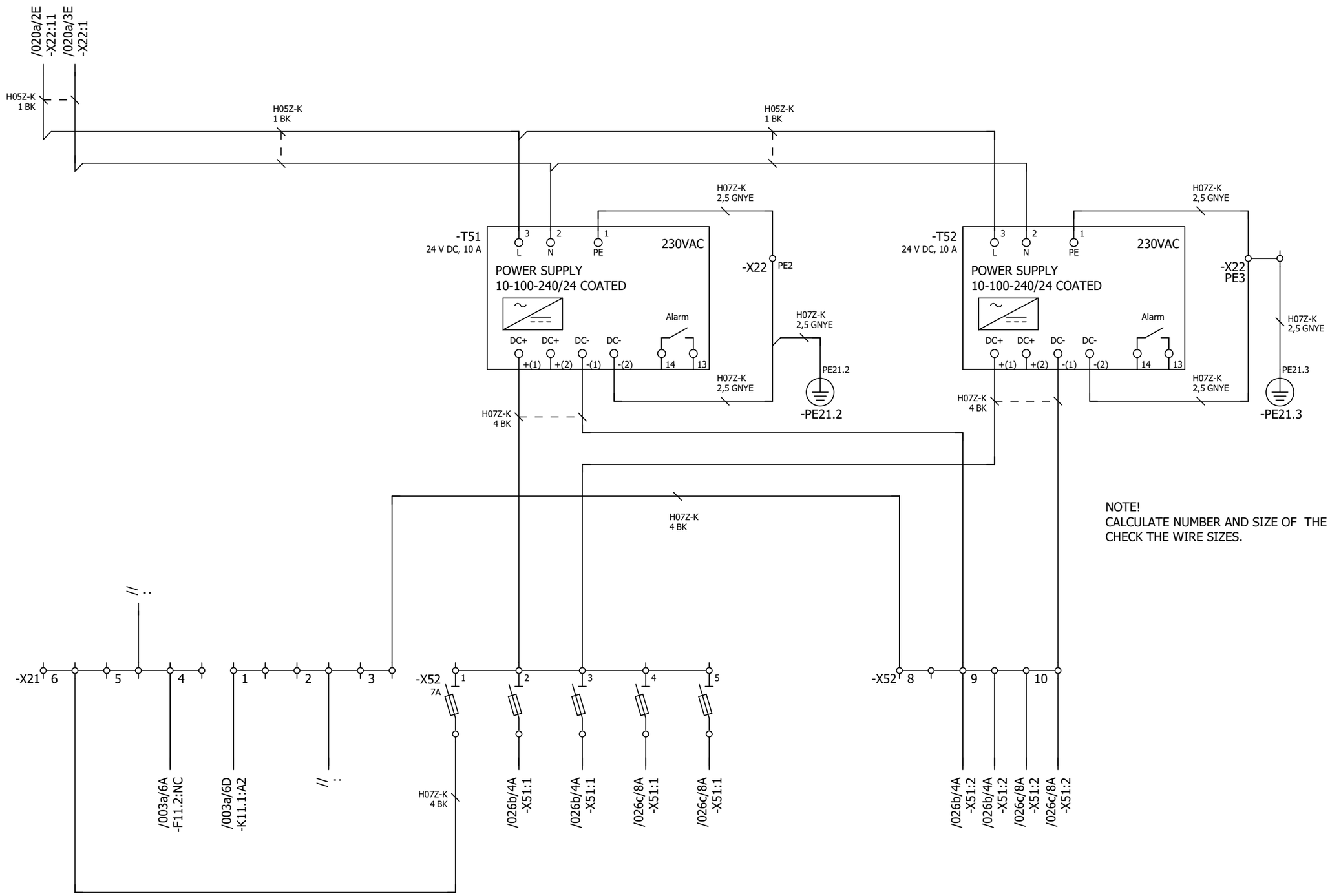

NOTE!
CALCULATE NUMBER AND SIZE OF THE POWER.
CHECK THE WIRE SIZES.

P345812 / 29711

Cust. Doc. No.	Prep. Sky-Xin Zhang 02.08.2023	Title AUXILIARY VOLTAGE DISTRIBUTION	Circuit diagram EFS2	Item Des.	
Cust. Ref. No.	App.	INV2.01	SAP Doc. No.	= 2.01	
Customer WMMP	Project Zhaka Jack-up Lift System	ACS880-107-0078A-3	EPLAN Doc. No. 3ABDC230674 - 2.01	+ 2.01.1	
	Zhaka Jack-up Lift System-1	400V	ABB Ref. No.	Rev. .1	Sheet 021a
			Resp. Dept.	Cont.	026a

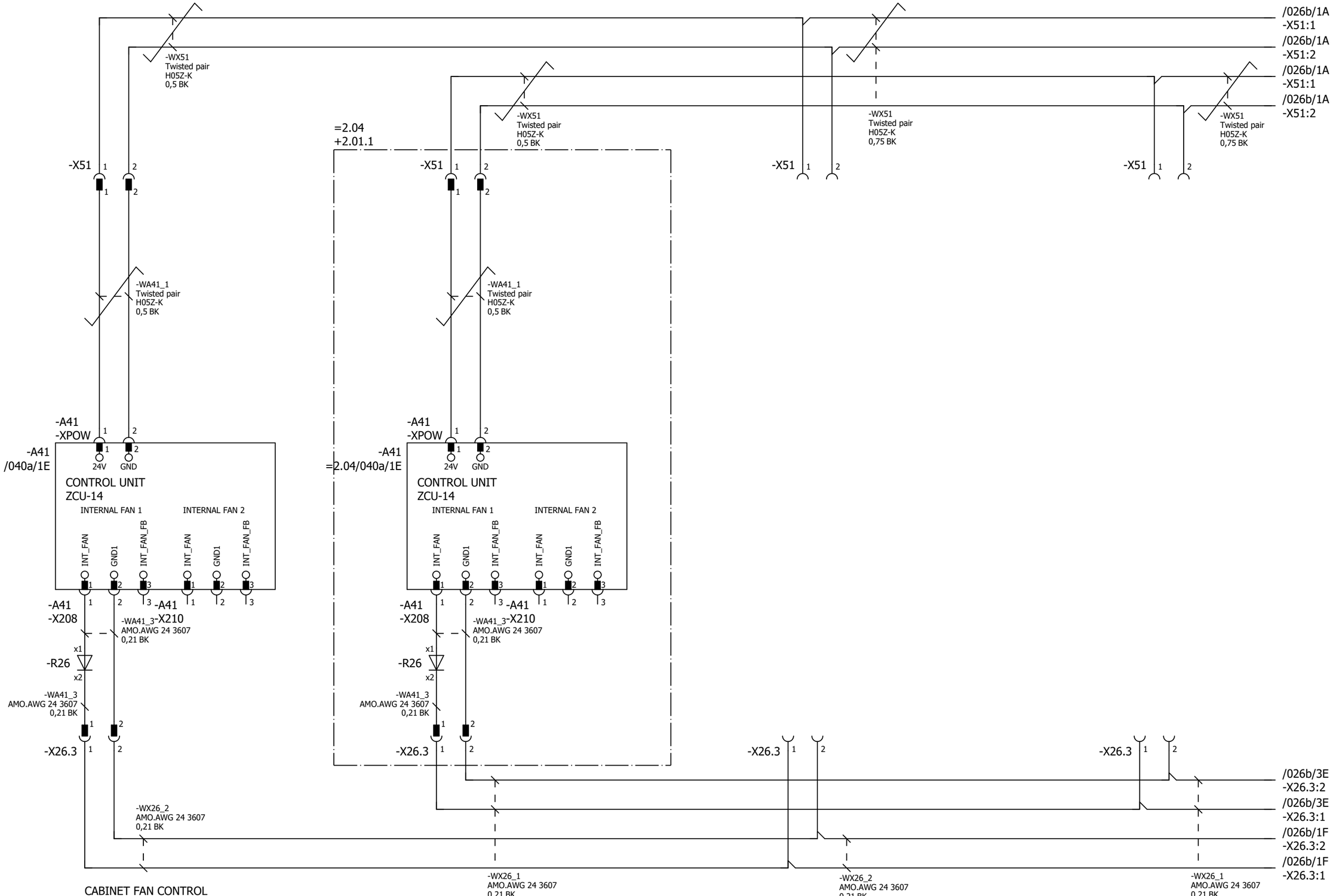

Cust. Doc. No.	Prep. Sky-Xin Zhang 02.08.2023	Title CABINET FAN CONTROL ZCU UPS, 24V FSO, FEA	Circuit diagram EFS2
Cust. Ref. No.	App.	INV2.01	SAP Doc. No.
Customer WMMP	Project Zhaka Jack-up Lift System	ACS880-107-0078A-3	EPLAN Doc. No. 3ABDC230674 - 2.01
	Zhaka Jack-up Lift System-1	400V	ABB Ref. No.
			Resp. Dept.

Item Des. = 2.01 + 2.01.1

Rev. .1 Sheet 026a

Cont. 026b

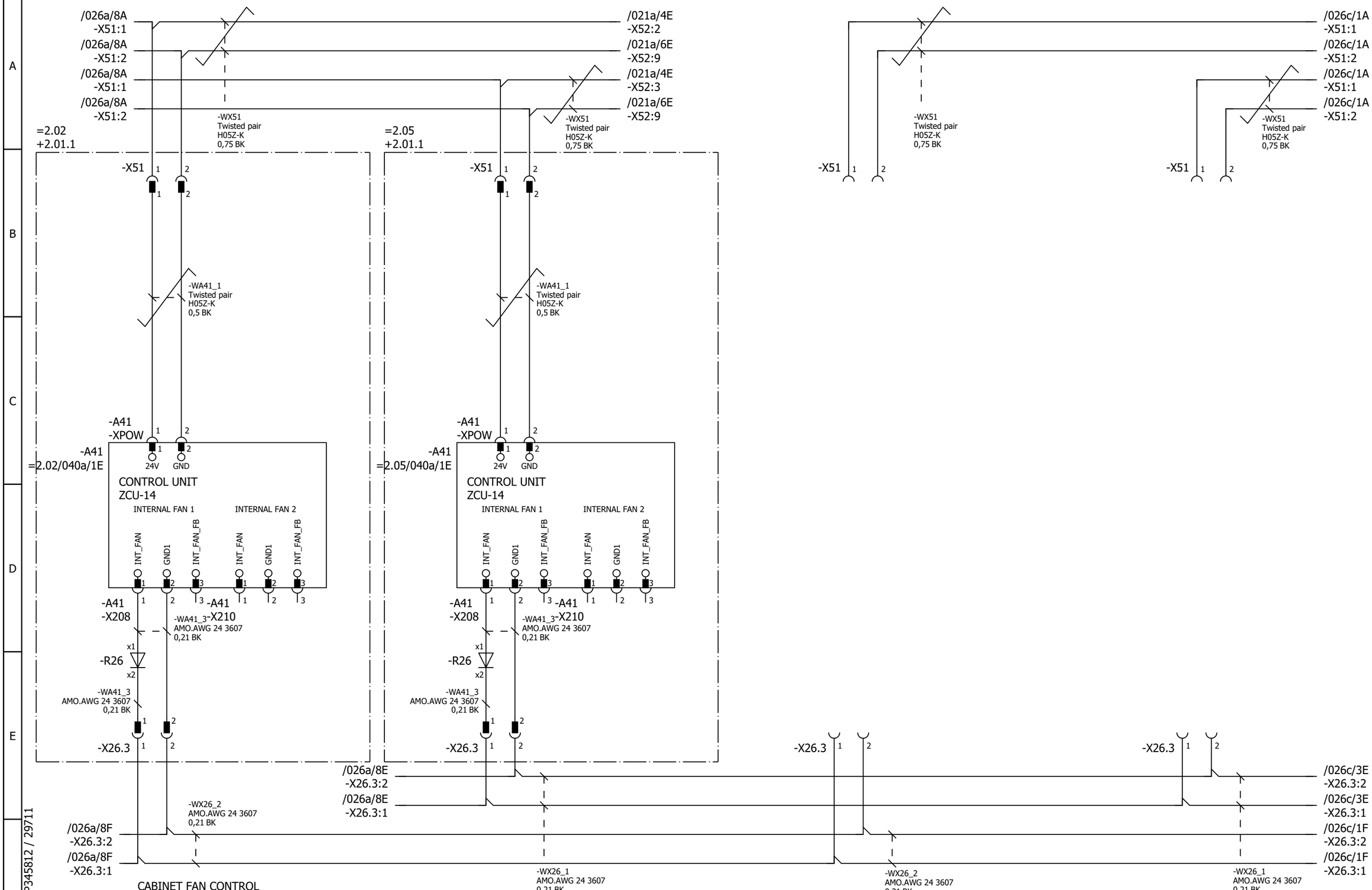

Cust. Doc. No.	Prep. Sky-Xin Zhang 02.08.2023	Title CABINET FAN CONTROL ZCU UPS, 24V FSO, FEA	Circuit diagram EFS2 / Item Des.
Cust. Ref. No.	App.	INV2.01	SAP Doc. No. / = 2.01
Customer WMMP	Project Zhaka Jack-up Lift System	ACS880-107-0078A-3	EPLAN Doc. No. 3ABDC230674 - 2.01 / + 2.01.1
	Zhaka Jack-up Lift System-1	400V	ABB Ref. No. / Rev. .1 / Sheet 026b
			Resp. Dept. / Cont. 026c

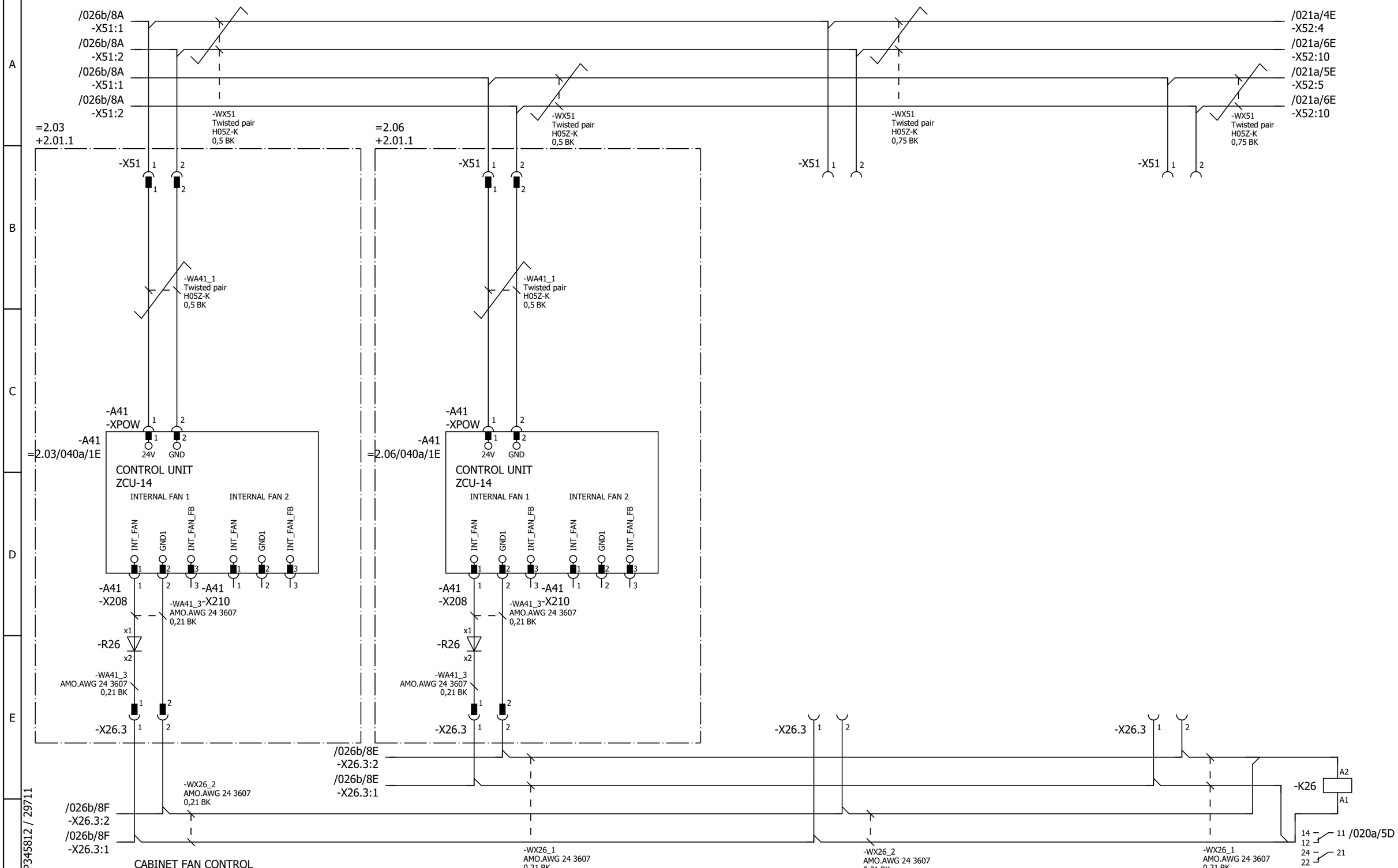

Cust. Doc. No.	Prep. Sky-Xin Zhang 02.08.2023	Title CABINET FAN CONTROL ZCU UPS, 24V FSO, FEA	Circuit diagram EFS2 / Item Des.
Cust. Ref. No.	App.	INV2.01	SAP Doc. No. / = 2.01
Customer WMMP	Project Zhaka Jack-up Lift System	ACS880-107-0078A-3	EPLAN Doc. No. 3ABDC230674 - 2.01 / + 2.01.1
	Zhaka Jack-up Lift System-1	400V	ABB Ref. No. / Rev. .1 / Sheet 026c
			Resp. Dept. / Cont. 040a

*) GEN.H05Z-K BK 1,0

Control and status signals	Terminal	Pin
E-STOP FEEDBACK 1 - ESTOP ACTIVE	-XRO1	12
RUNNING 1 - RUNNING	-XRO2	22
FAULT (-1) 1 - NO FAULT	-XRO3	32

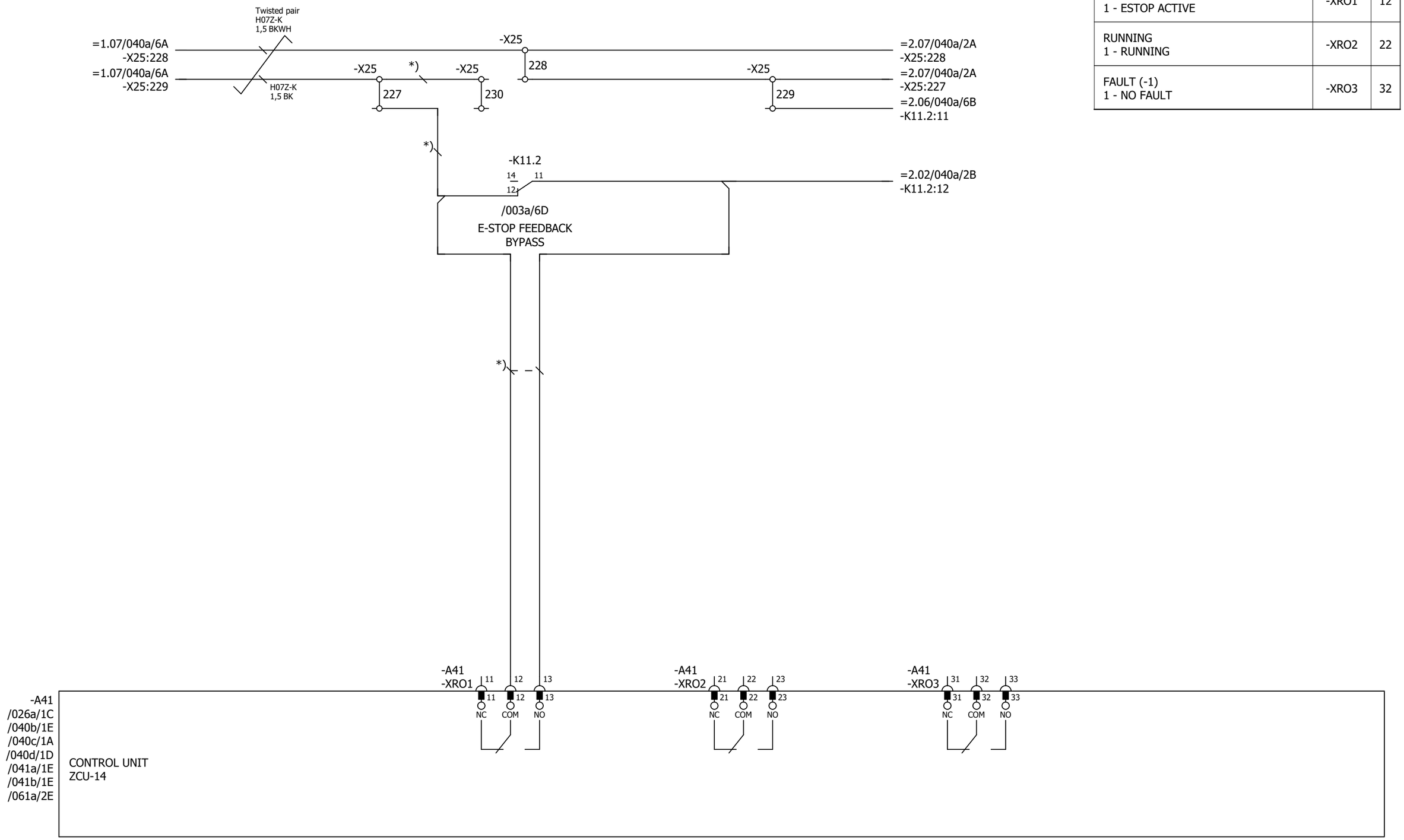

Cust. Doc. No.	Prep. Sky-Xin Zhang 02.08.2023	Title CONTROL BOARD INV2.01 ACS880-107-0078A-3 400V	Circuit diagram EFS2
Cust. Ref. No.	App.		SAP Doc. No.
Customer WMMP	Project Zhaka Jack-up Lift System Zhaka Jack-up Lift System-1		EPLAN Doc. No. 3ABDC230674 - 2.01
			ABB Ref. No.
			Resp. Dept.

Item Des.
= 2.01
+ 2.01.1

Rev. .1 Sheet 040a
Cont. 040b

Control and status signals	Terminal	Pin
DIGITAL INTERLOCK	-XD24	1
START/STOP 1 - START	-XDI	1
FORWARD/REVERSE 1 - REVERSE	-XDI	2
RESET	-XDI	3
EMERGENCY STOP 0 - ACTIVE	-XDI	4
NOT SPECIFIED	-XDI	5
DI6 NOT IN USE	-XDI	6
OUTPUT: READY	-XDIO	1
OUTPUT: RUNNING	-XDIO	2

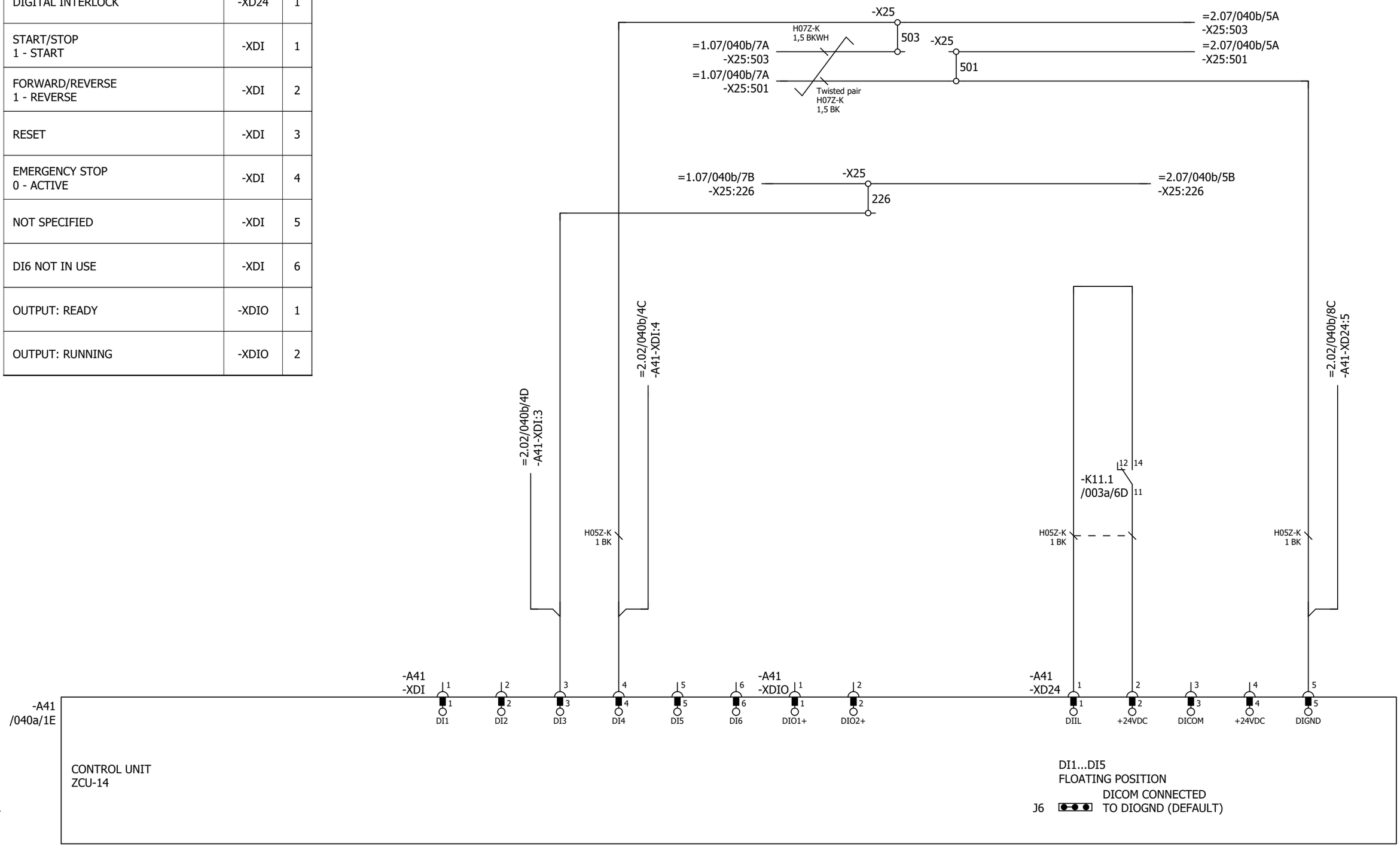

P345812 / 29711

Cust. Doc. No.	Prep. Sky-Xin Zhang 02.08.2023	Title CONTROL BOARD INV2.01 ACS880-107-0078A-3 400V	Circuit diagram EFS2	Item Des.	
Cust. Ref. No.	App.		SAP Doc. No.	= 2.01 + 2.01.1	
Customer WMMP	Project Zhaka Jack-up Lift System Zhaka Jack-up Lift System-1		EPLAN Doc. No. 3ABDC230674 - 2.01		
			ABB Ref. No.	Rev. .1	Sheet 040b
			Resp. Dept.	Cont.	040c

Control and status signals	Terminal	Pin
MOTOR TEMP. MONITORING 0(2)…10V	-XAI	4
AI2 NOT SPECIFIED BY DEFAULT NOT IN USE 0(4)…20mA	-XAI	6
CURR SOU MOT TEMP MONIT 0(4)...20mA	-XAO	1
CURRENT 0(4)…20mA ↔ 0(4)…MOTOR CURRENT	-XAO	3

P345812 / 29711

Cust. Doc. No.	Prep. Sky-Xin Zhang 02.08.2023	Title CONTROL BOARD INV2.01 ACS880-107-0078A-3 400V	Circuit diagram EFS2
Cust. Ref. No.	App.		SAP Doc. No.
Customer WMMP	Project Zhaka Jack-up Lift System Zhaka Jack-up Lift System-1		EPLAN Doc. No. 3ABDC230674 - 2.01
			ABB Ref. No.
			Resp. Dept.

Item Des.
= 2.01
+ 2.01.1

Rev. .1 Sheet 040c
Cont. 040d

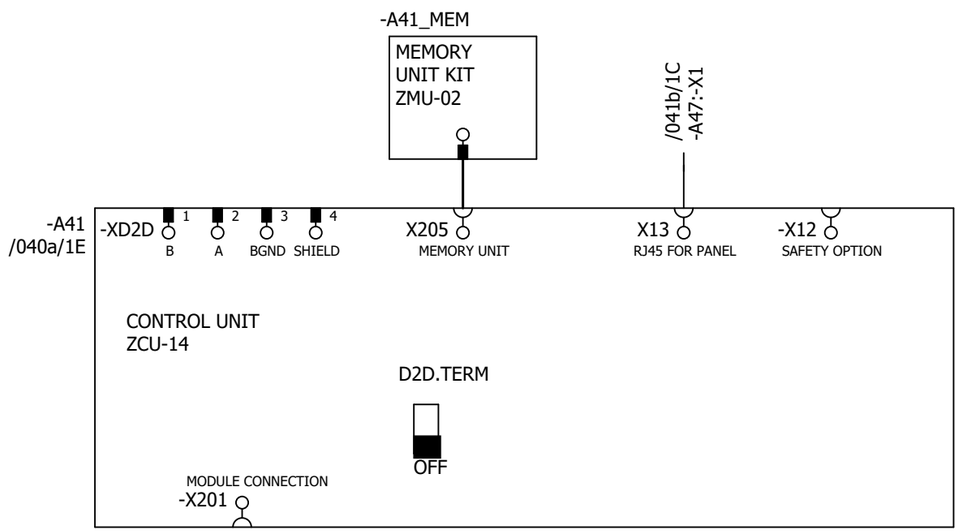

P345812 / 29711

Cust. Doc. No.	Prep. Sky-Xin Zhang 02.08.2023	Title CONTROL BOARD INV2.01 ACS880-107-0078A-3 400V	Circuit diagram EFS2
Cust. Ref. No.	App.		SAP Doc. No.
Customer WMMP	Project Zhaka Jack-up Lift System Zhaka Jack-up Lift System-1		EPLAN Doc. No. 3ABDC230674 - 2.01
			ABB Ref. No.
			Resp. Dept.

Item Des.	= 2.01 + 2.01.1
Rev. .1	Sheet 040d
Cont.	041a

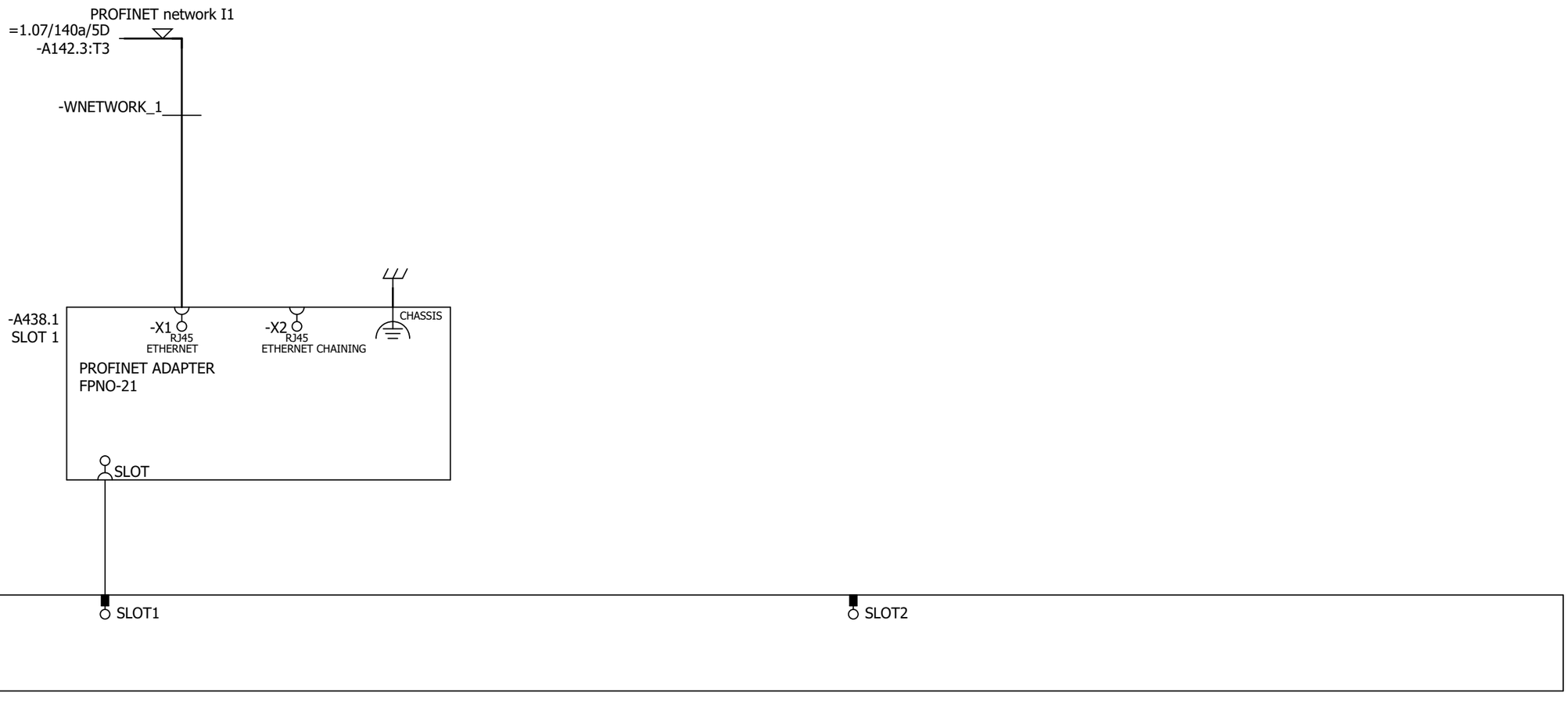

P345812 / 29711

Cust. Doc. No.	Prep. Sky-Xin Zhang 02.08.2023	Title OPTION CARDS INV2.01 ACS880-107-0078A-3 400V	Circuit diagram EFS2
Cust. Ref. No.	App.		SAP Doc. No.
Customer WMMP	Project Zhaka Jack-up Lift System Zhaka Jack-up Lift System-1		EPLAN Doc. No. 3ABDC230674 - 2.01
			ABB Ref. No.
			Resp. Dept.

Item Des.
= 2.01
+ 2.01.1

Rev. .1 Sheet 041a
Cont. 041b

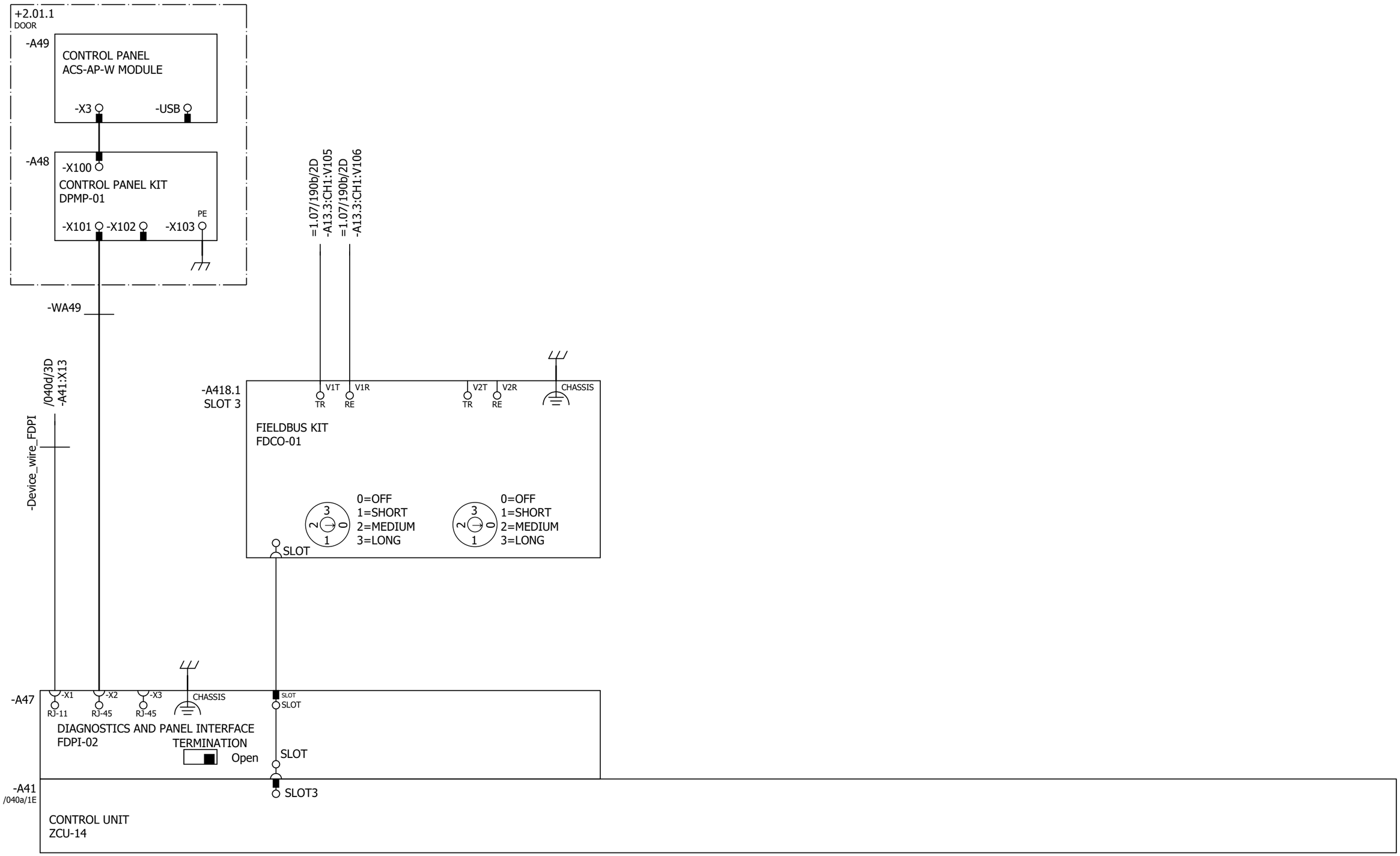

Cust. Doc. No.	Prep. Sky-Xin Zhang 02.08.2023	Title OPTION CARDS	Circuit diagram EFS2	Item Des.
Cust. Ref. No.	App.	INV2.01	SAP Doc. No.	= 2.01
Customer WMMP	Project Zhaka Jack-up Lift System	ACS880-107-0078A-3	EPLAN Doc. No. 3ABDC230674 - 2.01	+ 2.01.1
	Zhaka Jack-up Lift System-1	400V	ABB Ref. No.	Rev. .1 Sheet 041b
			Resp. Dept.	Cont. 061a

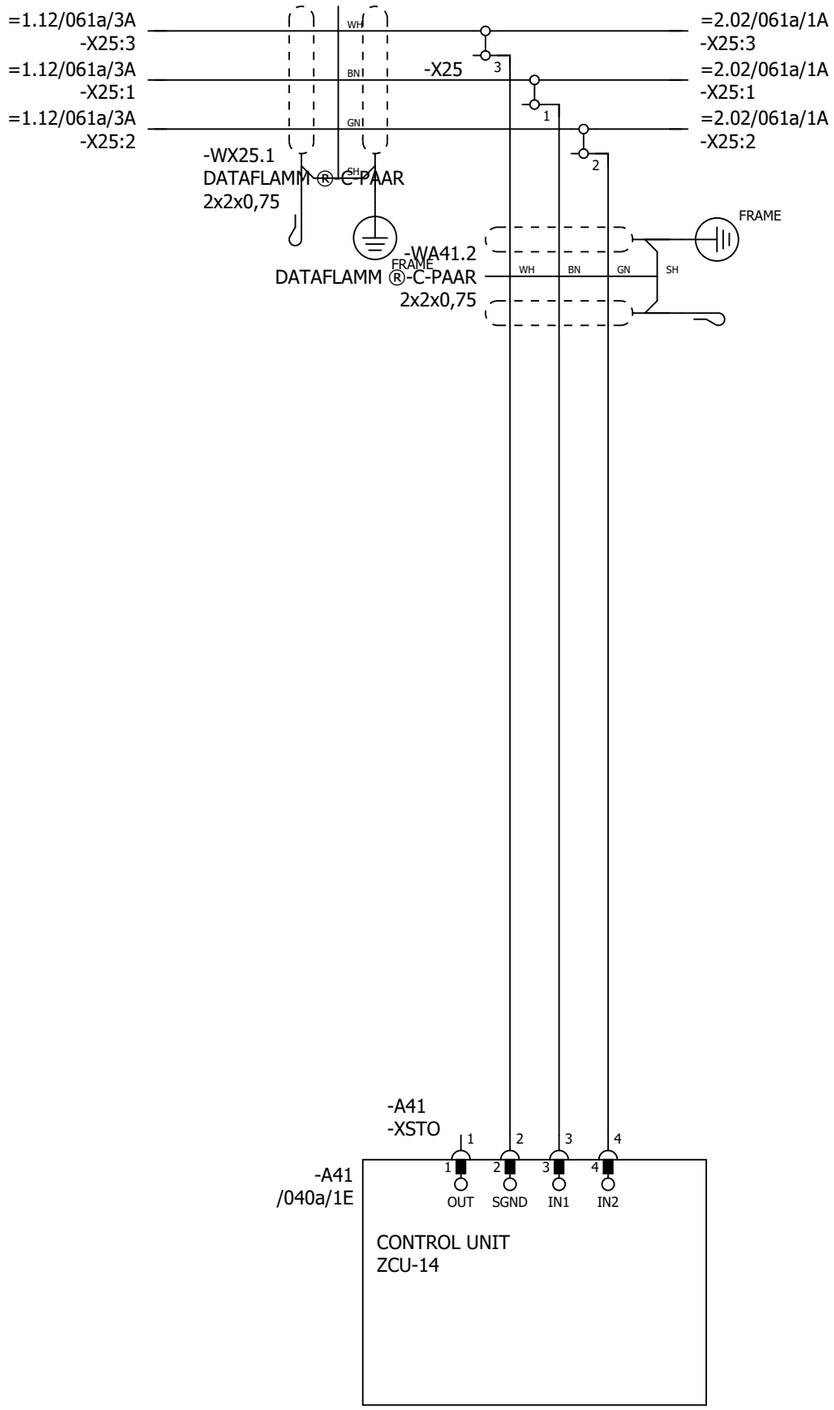

P345812 / 29711

SAFETY CIRCUIT
MACRO REVISION 6
RULES CONVERTED 19.7.2023

Cust. Doc. No.	Prep. Sky-Xin Zhang 02.08.2023	Title SAFETY CIRCUIT INV2.01 ACS880-107-0078A-3 400V	Circuit diagram EFS2
Cust. Ref. No.	App.		SAP Doc. No.
Customer WMMP	Project Zhaka Jack-up Lift System Zhaka Jack-up Lift System-1		EPLAN Doc. No. 3ABDC230674 - 2.01
			ABB Ref. No.
			Resp. Dept.

Item Des.
= 2.01
+ 2.01.1

Rev. .1 Sheet 061a
Cont. 095a

CABINET
HEATING

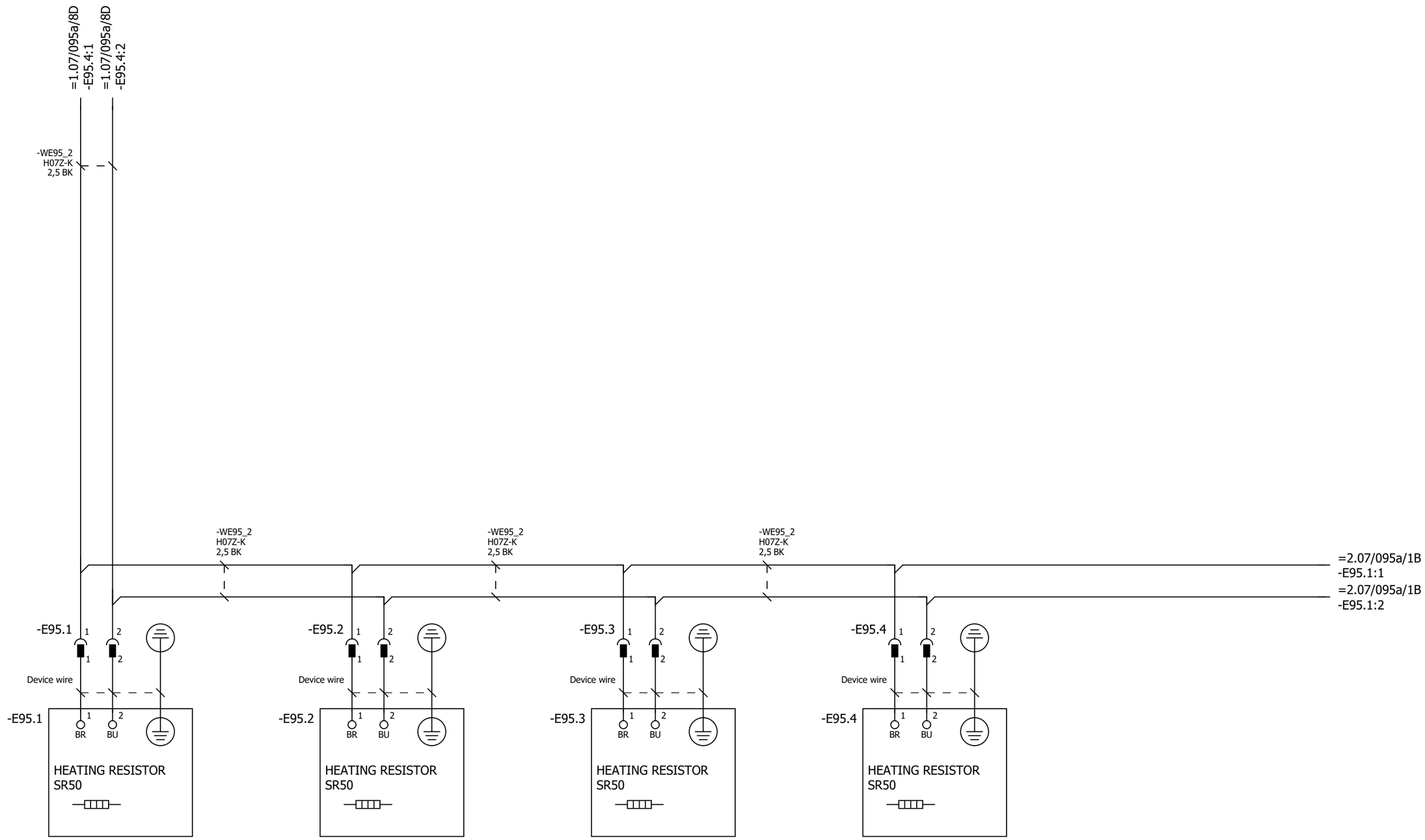

P345812 / 29711

Cust. Doc. No.	Prep. Sky-Xin Zhang 02.08.2023	Title CABINET HEATING	Circuit diagram EFS2	Item Des.	
Cust. Ref. No.	App.	INV2.01	SAP Doc. No.	= 2.01	
Customer WMMP	Project Zhaka Jack-up Lift System	ACS880-107-0078A-3	EPLAN Doc. No. 3ABDC230674 - 2.01	+ 2.01.1	
	Zhaka Jack-up Lift System-1	400V	ABB Ref. No.	Rev. .1	Sheet 095a
			Resp. Dept.	Cont.	&MPC/Part list_1

Part list: 3ABDC230674DU02013

Item	Sort String	Qty.Str	Unit	Component Number	Description and text	Technical data
0010		1.000	ST		ACS880-107-0078A-3+A012+B053+C121+C132+	
0020		1.000	ST		_C206+E210+F272+F287+F288+G300+G307+G315	
0030		1.000	ST		_+G320+G330+G344+H352+H367+J400+K492+L50	
0040		1.000	ST		_3+P913+Q964	
0050		1.000	ST		=2.01	
0060		1.000	ST		+2.01.1,INU3	
0070		1.000	ST		Powerconversionequipment	
0080	-A41_MEM	1.000	PC	3AXD50000006010	MEMORY UNIT KIT ZMU-02	
0090	-T11	1.000	PC	3AUA0000120009-M	ACS880-104-0078A-3+P922	+P922
0100	SCREW	1.000	PC	3AFE68681481	SCREW K30X10 TORX	PT WN1452 ZN
0110	SOFTWARE	1.000	PC	3AUA0000153462	SOFTWARE PRIMARY CONTROL PROGRA	AINF6 FOR ZCU-12/14
0120		1.000	ST		R4imoduleDCfuse	
0130	-F11.1-2	2.000	PC	3AXD50000000219	FUSE FR27UQ69V160T/160A	6.921 CP URQ 27X60MM FERRULE;AR
0140		1.000	ST		R3i-R4imoduleDCfusebase	
0150	(-F11.1-2)	2.000	PC	3AUA0000089227	FUSE HOLDER FUSE BASE US271MI 150A	FUSE BASE US271MI 150A 800V
0160		1.000	ST		motorterminalR4i,coppercable	
0170	-X1	1.000	PC	3ABD50000000270	CONNECTOR PPAC-50	50 MM2;150 A;800V
0180	-X1	1.000	PC	3ABD50000000270	CONNECTOR PPAC-50	50 MM2;150 A;800V
0190	-X1	1.000	PC	3ABD50000000270	CONNECTOR PPAC-50	50 MM2;150 A;800V
0200		1.000	ST		24VDCsupplyZCU	
0210	-WA41_1	1.000	PC	3AXD50000005218	WIRE HARNESS 24VDC SUPPLY X51 ZCU V	HALOGEN FREE;X51_A51
0220		1.000	ST		Rooffancontrol	
0230	-WA41_3	1.000	PC	3AXD50000002688	WIRE HARNESS FAN CONTROL MAIN WIRE	HALOGEN FREE;X208_X26.3
0240		1.000	ST		Toprowmodulewireharness	
0250	-WT11	1.000	PC	3AXD50000002256	WIRE HARNESS R4I FUSE_MODULE V2	HALOGEN FREE;MAIN CIRCUIT WIRE SET
0260	-WX1	1.000	PC	3AXD50000002258	WIRE HARNESS R4I MODULE_OUTPUT TR V	HALOGEN FREE;MAIN CIRCUIT WIRE SET
0270		1.000	ST		Optionmodule	
0280	-A418.1	1.000	PC	3AUA0000107392	COMMUNIC. ADAPTER FDCO-01	
0290		1.000	ST		Controlpanel	
0300	-A47	1.000	PC	3AUA0000108650	FIELDBUS KIT FDPI-02	PANEL BUS ADAPTER
0310	-A48	1.000	PC	3AUA0000108878	CONTROL PANEL KIT DPMP-01	DPMP-01
0320	-A49	1.000	PC	3AXD50000025964	CONTROL PANEL ACS-AP-W MODULE	ASSISTANT PANEL WIRELESS CPU1
0330		1.000	ST		DCfusesupervision	

P345812 / 29711

Cust. Doc. No.	Prep.	Title PART LIST INV2.01 ACS880-107-0078A-3 400V	Item Des. = 2.01 +
Cust. Ref. No.	App.		SAP Doc. No.
Customer WMMP	Project Zhaka Jack-up Lift System Zhaka Jack-up Lift System-1		EPLAN Doc. No. 3ABDC230674 - 2.01
			ABB Ref. No. / Rev. / Sheet Part list_1
			Resp. Dept. / Cont. Part list_2

Part list: 3ABDC230674DU02013

Item	Sort String	Qty.Str	Unit	Component Number	Description and text	Technical data
0340	-K11.1-2	2.000	PC	3AXD50000021313	RELAY DEK_REL_G24/21	250 V;6 A;COIL 24VDC
0350	-WK11	1.000	PC	3AXD50000003220	WIRE HARNESS 6 MODULE 800MM CABINET	HALOGEN FREE;DC FUSE SUPERVISION
0360	-WK11	1.000	PC	3AXD50000003227	WIRE HARNESS 1ST MODULE SUPERV 800M	HALOGEN FREE;DC FUSE SUPERVISION
0370	-WK11	1.000	PC	3AXD50000003228	WIRE HARNESS 2ND MODULE SUPERV 800M	HALOGEN FREE;DC FUSE SUPERVISION
0380	-WK11	1.000	PC	3AXD50000003229	WIRE HARNESS 3RD MODULE SUPERV 800M	HALOGEN FREE;DC FUSE SUPERVISION
0390	-WK11	1.000	PC	3AXD50000003230	WIRE HARNESS 4TH MODULE SUPERV 800M	HALOGEN FREE;DC FUSE SUPERVISION
0400	-WK11	1.000	PC	3AXD50000003231	WIRE HARNESS 5TH MODULE SUPERV 800M	HALOGEN FREE;DC FUSE SUPERVISION
0410	-WK11	1.000	PC	3AXD50000003232	WIRE HARNESS 6TH MODULE SUPERV 800M	HALOGEN FREE;DC FUSE SUPERVISION
0420		1.000	ST		FieldBus	
0430	-A438.1	1.000	PC	3AXD50000192779	OPTION MODULE FPNO-21	PROFINET IO
0440		1.000	ST		Supplementtorelay	
0450	(-K11.1)	1.000	PC	3AXD50000021312	TERMINAL BLOCK ST EB2_DIK_RD 2716693	2POLE, 6,15 MM PITCH;FOR DEK RELAYS
0460		1.000	ST		CommonDCfuse	
0470	-F10.1-2	2.000	PC	3AXD50000000246	FUSE 170M4416	630 A;690 V;DIN1 FLUSH END;AR;200KA
0480	-F10.3-4	2.000	PC	3AXD50000000234	FUSE 170M4410	315 A;690 V;DIN1 FLUSH END;AR;200KA
0490		1.000	ST		Cabinetfan	
0500	-F26	1.000	PC	3AFE68264758	PROTECTION SWITCH S 201-K4	4A, 440VAC/60VDC
0510	-G26.1	1.000	PC	3AXD50000000592	FAN R3G225-RH17-23	230V;96W;50HZ;60HZ;0,77A;1080M3S CCC,UL
0520	-G26.2	1.000	PC	3AXD50000000592	FAN R3G225-RH17-23	230V;96W;50HZ;60HZ;0,77A;1080M3S CCC,UL
0530	-K26	1.000	PC	3AUA0000102191	RELAY RCL425024-SOCKET-DIODE	8 A;24 V;24VDC, 2C/O
0540	-X26.1	1.000	PC	3AXD50000000723	TERMINAL BLOCK AS X26 FAN SUPPLY PLUG	12,00 AWG;2,50 mm2;24,00 A;500,00 V
0550	(-X26.1)	1.000	PC	3AXD50000000724	TERMINAL BLOCK AS X26 FAN SUPPLY SOCKET	12,00 AWG;2,50 mm2;24,00 A;500,00 V
0560	-X26.2	1.000	PC	3AXD50000000723	TERMINAL BLOCK AS X26 FAN SUPPLY PLUG	12,00 AWG;2,50 mm2;24,00 A;500,00 V
0570	(-X26.2)	1.000	PC	3AXD50000000724	TERMINAL BLOCK AS X26 FAN SUPPLY SOCKET	12,00 AWG;2,50 mm2;24,00 A;500,00 V
0580		1.000	ST		Auxvoltagedistribution	
0590	-X22	1.000	PC	3AXD50000001632	TERMINAL BLOCK AS X22	12 AWG;2 mm2;24 A;800 V
0600	-X25	1.000	PC	3AXD50000001609	TERMINAL BLOCK AS X25 (1)	6 AWG;10 mm2;57 A;800 V
0610	-X25	1.000	PC	3ABD00609550	ASSEMBLY PLATE FOR X25 TERMINAL	acs880
0620		1.000	ST		EMSTOPterminalblock	
0630	-X25	1.000	PC	3AXD50000001610	TERMINAL BLOCK AS X25 (2)	12 AWG;2 mm2;24 A;500 V
0640		1.000	ST		STOterminalblock	
0650	-X25	1.000	PC	3AXD50000001631	TERMINAL BLOCK AS X60	12 AWG;2 mm2;24 A;500 V
0660		1.000	ST		24vDCdistributionwithUPS	

P345812 / 29711

Cust. Doc. No.	Prep.	Title PART LIST INV2.01 ACS880-107-0078A-3 400V	Item Des. = 2.01 +
Cust. Ref. No.	App.		SAP Doc. No.
Customer WMMP	Project Zhaka Jack-up Lift System Zhaka Jack-up Lift System-1		EPLAN Doc. No. 3ABDC230674 - 2.01
			ABB Ref. No. / Rev. / Sheet Part list_2
			Resp. Dept. / Cont. Part list_3

Part list: 3ABDC230674DU02013

Item	Sort String	Qty.Str	Unit	Component Number	Description and text	Technical data
0670	-F21	1.000	PC	3AFE68264766	PROTECTION SWITCH S 201-K6	S 201-K6
0680		1.000	ST		24VDCsupply	
0690	-WX51	1.000	PC	3AXD50000005214	WIRE HARNESS 24VDC SUPPLY 800MM V2	HALOGEN FREE;X52_X51
0700		1.000	ST		Cabinetrooffansupply	
0710	-WG26	1.000	PC	3AXD50000036922	WIRE HARNESS CABINET ROOF FAN SUPPL	R1I-R4I 800/1000MM
0720		1.000	ST		Cabinetrooffancontrol	
0730	-WX26_1	1.000	PC	3AXD50000005080	WIRE HARNESS 800MM CABINET LOWER RO	HALOGEN FREE;X26.3_X26.4
0740	-WX26_2	1.000	PC	3AXD50000005078	WIRE HARNESS 800MM CABINET UPPER RO	HALOGEN FREE;X26.3_K26
0750		1.000	ST		24VDCdistribution	
0760	-F52.1-5	5.000	PC	3AXD50000005465	FUSE MDL-7-R	7 A;250 V;¼" x 1¼";GLASS TUBE;TIME-DELAY
0770	-T22	1.000	PC	3ABD00010542	POWER SUPPLY NDR-120-24	24V 5A
0780	-X21	1.000	PC	3AXD50000001633	TERMINAL BLOCK AS X21	12 AWG;2 mm2;24 A;800 V
0790	-X52	1.000	PC	3AXD50000005221	TERMINAL BLOCK AS 24VDC X52 TERM BLOCK 5	10 AWG;4 mm2;10 A;500 V;fuse size 6,3x32
0800		1.000	ST		24vDCdistribution	
0810	-T51	1.000	PC	3ABD00010602	POWER SUPPLY NDR-240-24	24V 10A
0820	-T52	1.000	PC	3ABD00010602	POWER SUPPLY NDR-240-24	24V 10A
0830		1.000	ST		Cabinetheaters	
0840	-E95.1-4	4.000	PC	3AFE09827498	HEATING EQUIPMENT SR50	HEATER 50W/220V(110-270VACDC)
0850	(-E95.1-4)	4.000	PC	3AXD50000010133	ASSEMBLY PLATE HEATER	STEEL HDG 1,0;DEGREAS CLEAN
0860	(-E95.1-4)	1.000	PC	3AXD50000010509	ASSEMBLY DRAWING HEATER 50 AND 100W	
0870	X95.1A-4A	4.000	PC	3AXD50000007033	CONNECTOR SC 2,5/ 2	2,50 mm2;24 A;500 V;2-POS. MALE
0880	X95.1B-4B	4.000	PC	3AUA0000066694	CONNECTOR SSL2.5 3043815	LOCKING ELEMENTS FOR ST-COMBI CONNECTOR
0890		1.000	ST		Supplementforrelay	
0900	(-K11)	2.000	PC	3AXD50000021311	CONNECTOR EB 10-DIK RD 2716774	10POLE, 6,15 MM PITCH;FOR DEK RELAYS
0910	(-K11)	1.000	PC	3AXD50000021314	RELAY D-DEK_1,5_GN	end plate

P345812 / 29711

Cust. Doc. No.	Prep.	Title PART LIST INV2.01 ACS880-107-0078A-3 400V	Item Des. = 2.01 +
Cust. Ref. No.	App.		SAP Doc. No.
Customer WMMP	Project Zhaka Jack-up Lift System Zhaka Jack-up Lift System-1		EPLAN Doc. No. 3ABDC230674 - 2.01
			ABB Ref. No. / Rev. / Sheet Part list_3
			Resp. Dept. / Cont. &EMA/1

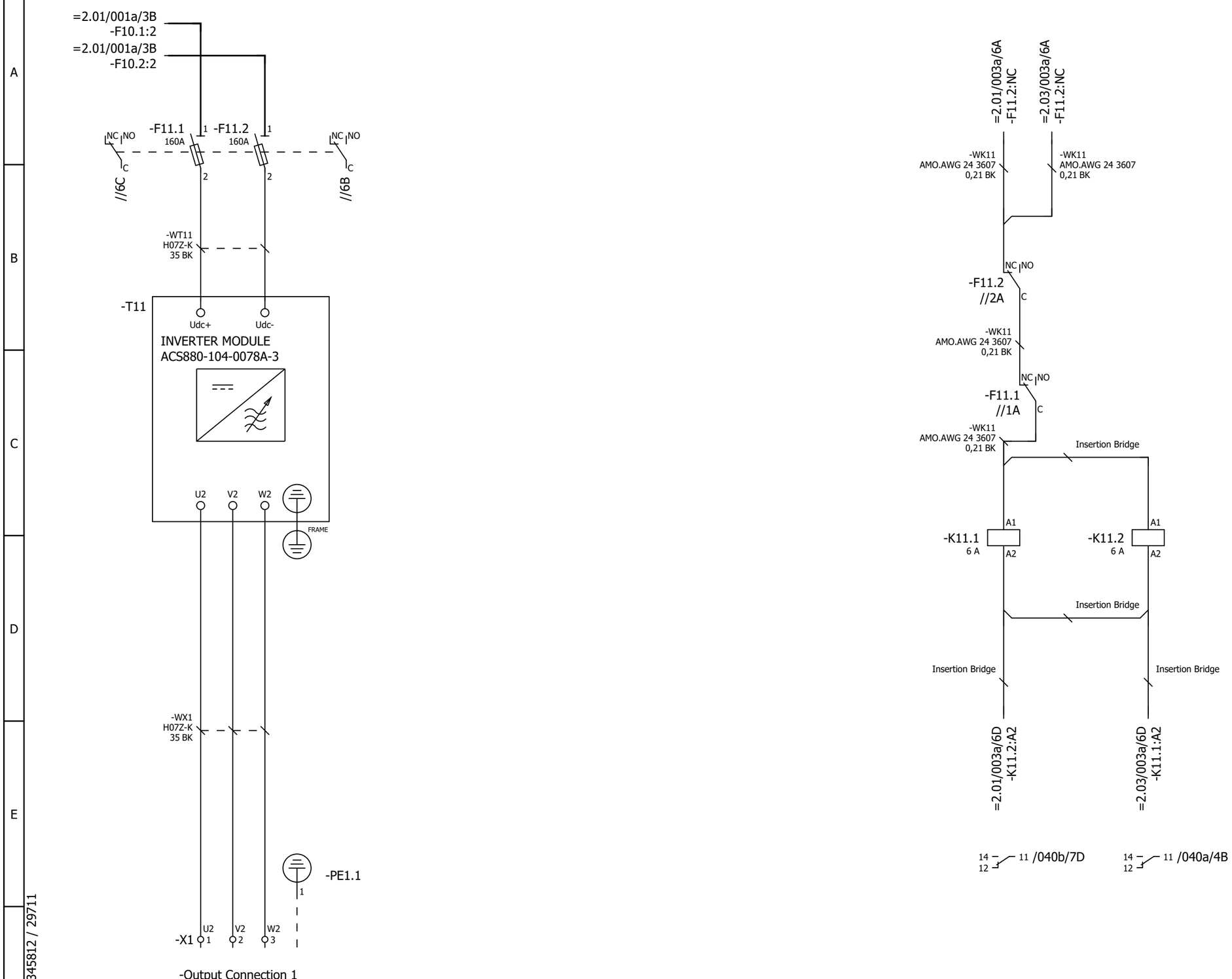

P345812 / 29711

Cust. Doc. No.	Prep. Sky-Xin Zhang 02.08.2023	Title MAIN CIRCUIT	Circuit diagram EFS2
Cust. Ref. No.	App.	INV2.02	SAP Doc. No.
Customer WMMP	Project Zhaka Jack-up Lift System	ACS880-107-0078A-3	EPLAN Doc. No. 3ABDC230674 - 2.02
	Zhaka Jack-up Lift System-1	400V	ABB Ref. No.
			Resp. Dept.

Item Des.
= 2.02
+ 2.01.1

Rev. .1 Sheet 003a
Cont. 013a

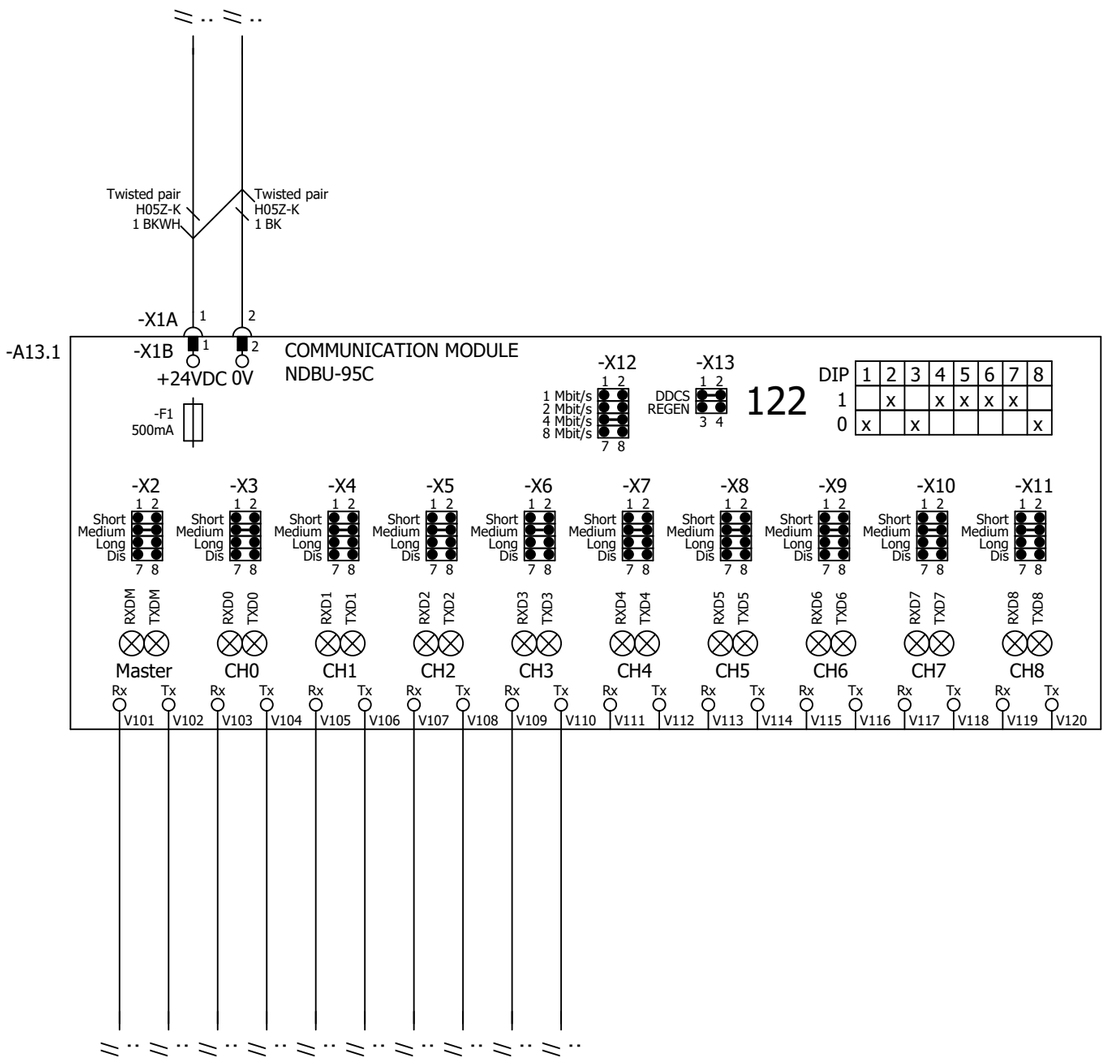

P345812 / 29711

Cust. Doc. No.	Prep. Sky-Xin Zhang 02.08.2023	Title DDCS BRANCHING UNIT	Circuit diagram EFS2	Item Des.	
Cust. Ref. No.	App.	INV2.02	SAP Doc. No.	= 2.02	
Customer WMMP	Project Zhaka Jack-up Lift System	ACS880-107-0078A-3	EPLAN Doc. No. 3ABDC230674 - 2.02	+ 2.01.1	
	Zhaka Jack-up Lift System-1	400V	ABB Ref. No.	Rev. .1	Sheet 013a
			Resp. Dept.	Cont.	040a

Control and status signals	Terminal	Pin
E-STOP FEEDBACK 1 - ESTOP ACTIVE	-XRO1	12
RUNNING 1 - RUNNING	-XRO2	22
FAULT (-1) 1 - NO FAULT	-XRO3	32

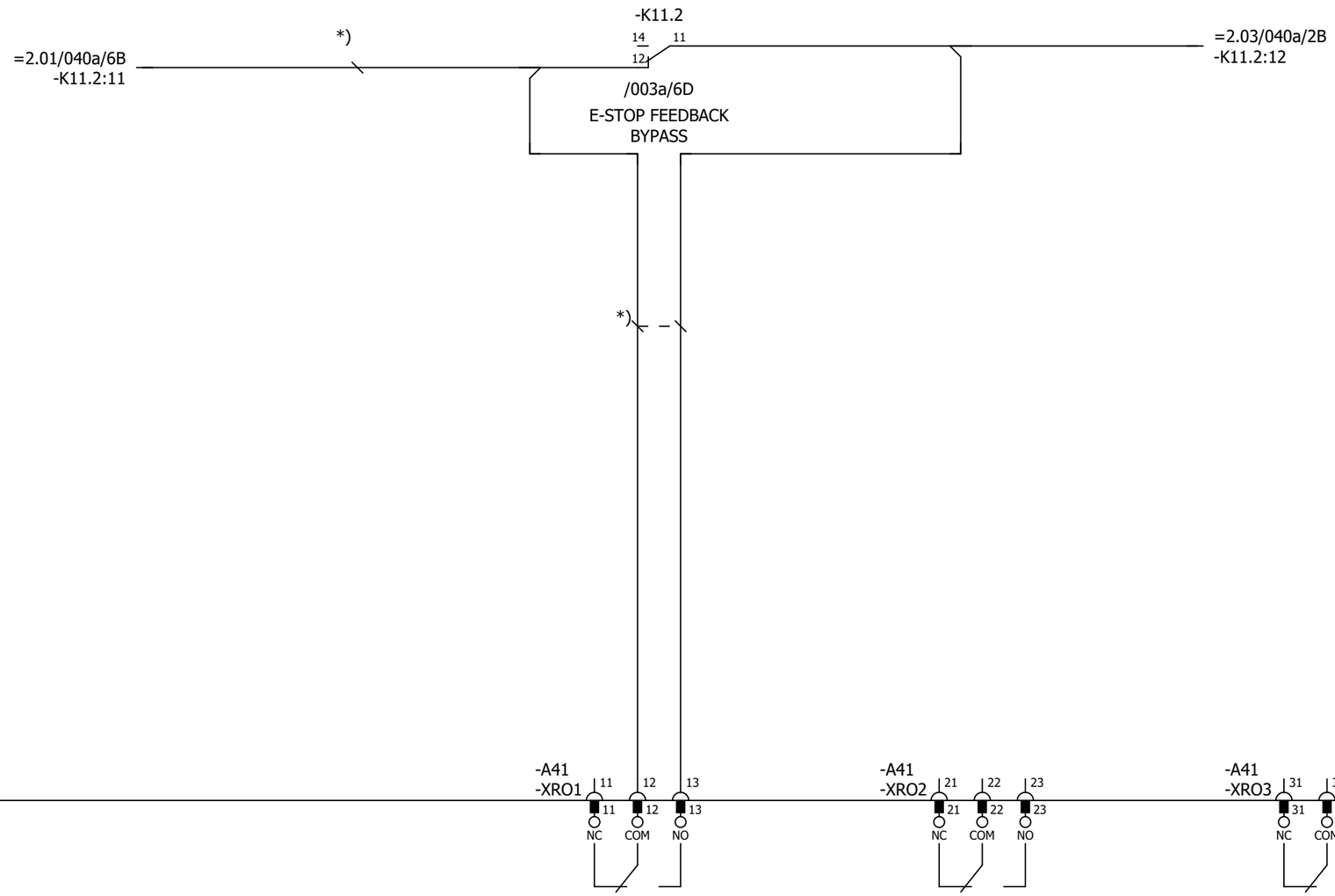

P345812 / 29711

Cust. Doc. No.	Prep. Sky-Xin Zhang 02.08.2023	Title CONTROL BOARD INV2.02 ACS880-107-0078A-3 400V	Circuit diagram EFS2
Cust. Ref. No.	App.		SAP Doc. No.
Customer WMMP	Project Zhaka Jack-up Lift System Zhaka Jack-up Lift System-1		EPLAN Doc. No. 3ABDC230674 - 2.02
			ABB Ref. No.
			Resp. Dept.

Item Des.
= 2.02
+ 2.01.1

Rev. .1 Sheet 040a
Cont. 040b

Control and status signals	Terminal	Pin
DIGITAL INTERLOCK	-XD24	1
START/STOP 1 - START	-XDI	1
FORWARD/REVERSE 1 - REVERSE	-XDI	2
RESET	-XDI	3
EMERGENCY STOP 0 - ACTIVE	-XDI	4
NOT SPECIFIED	-XDI	5
DI6 NOT IN USE	-XDI	6
OUTPUT: READY	-XDIO	1
OUTPUT: RUNNING	-XDIO	2

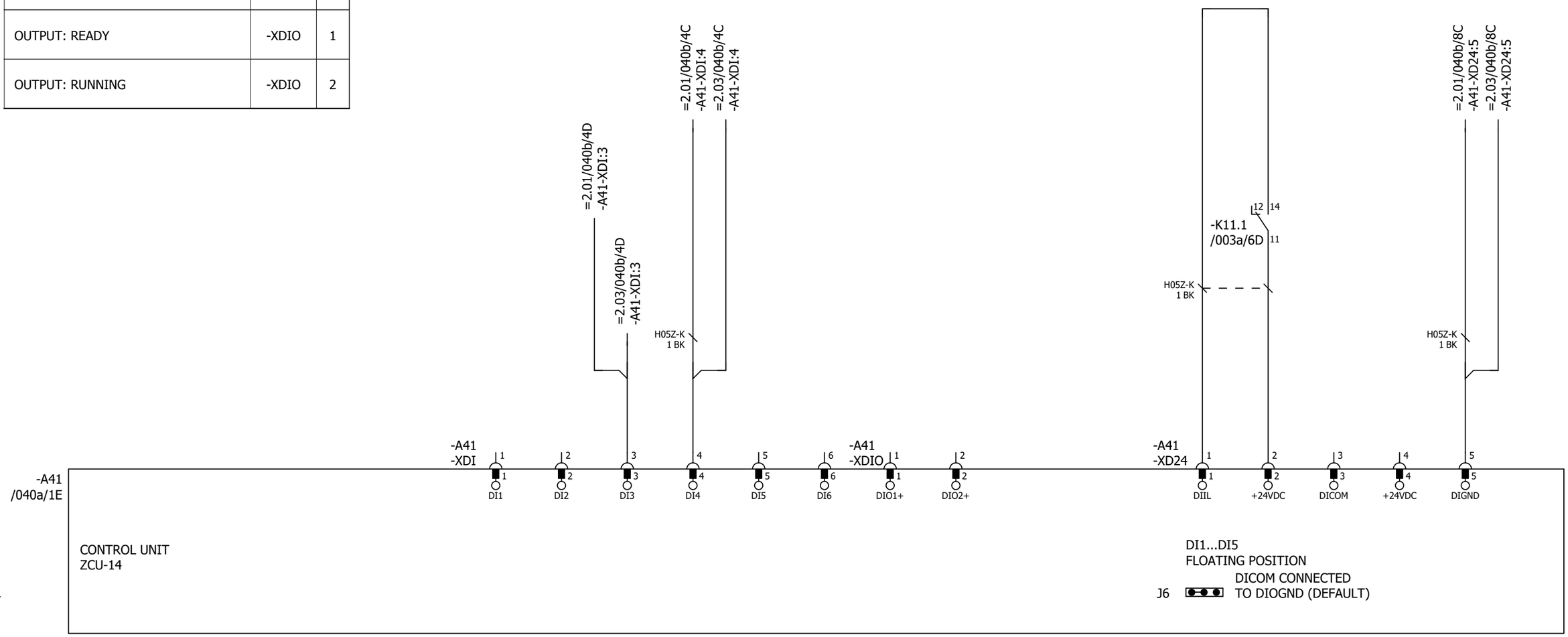

P345812 / 29711

Cust. Doc. No.	Prep. Sky-Xin Zhang 02.08.2023	Title CONTROL BOARD INV2.02 ACS880-107-0078A-3 400V	Circuit diagram EFS2	Item Des.	
Cust. Ref. No.	App.		SAP Doc. No.	= 2.02 + 2.01.1	
Customer WMMP	Project Zhaka Jack-up Lift System Zhaka Jack-up Lift System-1	ABB	EPLAN Doc. No. 3ABDC230674 - 2.02		
			ABB Ref. No.	Rev. .1	Sheet 040b
			Resp. Dept.	Cont.	040c

Control and status signals	Terminal	Pin
MOTOR TEMP. MONITORING 0(2)…10V	-XAI	4
AI2 NOT SPECIFIED BY DEFAULT NOT IN USE 0(4)…20mA	-XAI	6
CURR SOU MOT TEMP MONIT 0(4)...20mA	-XAO	1
CURRENT 0(4)…20mA ↔ 0(4)…MOTOR CURRENT	-XAO	3

P345812 / 29711

Cust. Doc. No.	Prep. Sky-Xin Zhang 02.08.2023	Title CONTROL BOARD INV2.02 ACS880-107-0078A-3 400V	Circuit diagram EFS2
Cust. Ref. No.	App.		SAP Doc. No.
Customer WMMP	Project Zhaka Jack-up Lift System Zhaka Jack-up Lift System-1		EPLAN Doc. No. 3ABDC230674 - 2.02
			ABB Ref. No.
			Resp. Dept.

Item Des.
= 2.02
+ 2.01.1

Rev. .1 Sheet 040c
Cont. 040d

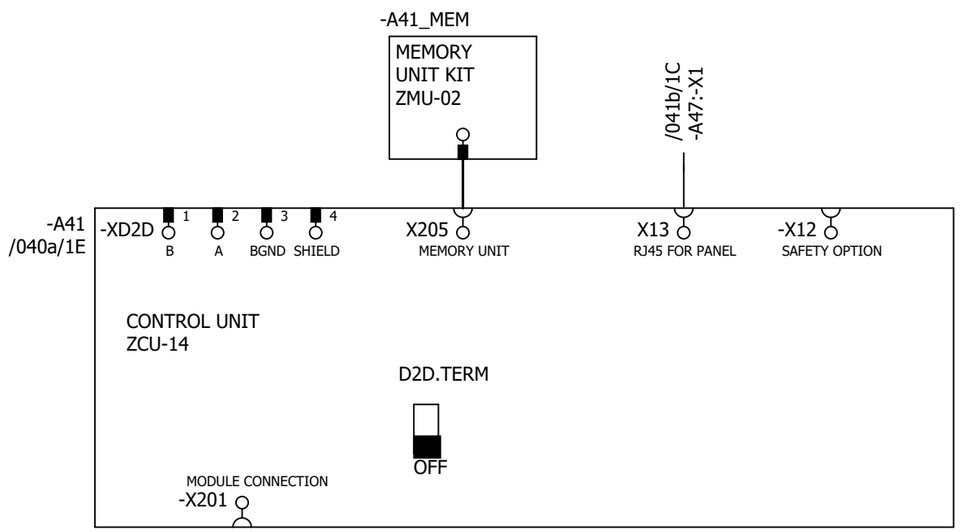

P345812 / 29711

Cust. Doc. No.	Prep. Sky-Xin Zhang 02.08.2023	Title CONTROL BOARD	Circuit diagram EFS2	Item Des.	
Cust. Ref. No.	App.	INV2.02	SAP Doc. No.	= 2.02	
Customer WMMP	Project Zhaka Jack-up Lift System	ACS880-107-0078A-3	EPLAN Doc. No. 3ABDC230674 - 2.02	+ 2.01.1	
	Zhaka Jack-up Lift System-1	400V	ABB Ref. No.	Rev. .1	Sheet 040d
			Resp. Dept.	Cont.	041a

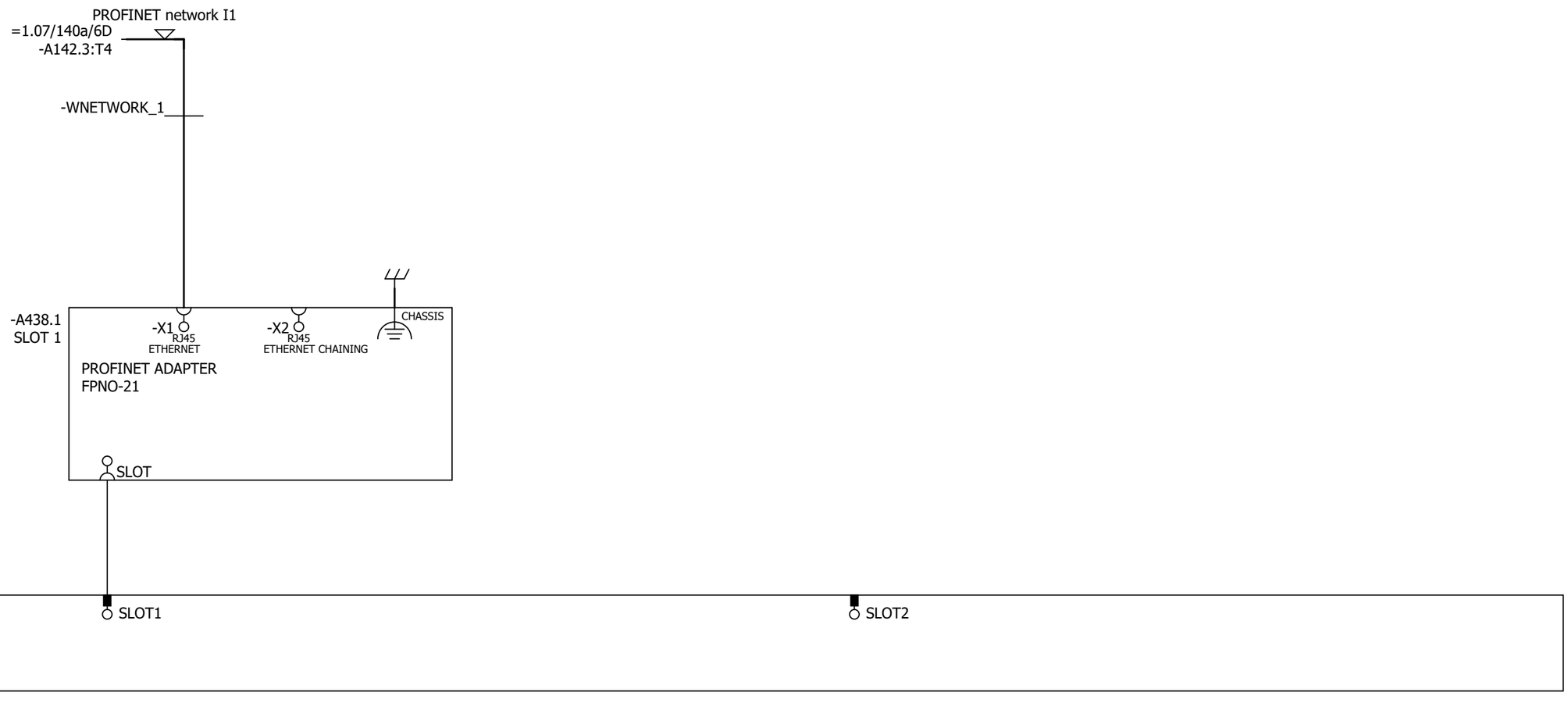

Cust. Doc. No.	Prep. Sky-Xin Zhang 02.08.2023	Title OPTION CARDS	Circuit diagram EFS2	Item Des.	
Cust. Ref. No.	App.	INV2.02	SAP Doc. No.	= 2.02	
Customer WMMP	Project Zhaka Jack-up Lift System	ACS880-107-0078A-3	EPLAN Doc. No. 3ABDC230674 - 2.02	+ 2.01.1	
	Zhaka Jack-up Lift System-1	400V	ABB Ref. No.	Rev. .1	Sheet 041a
			Resp. Dept.	Cont.	041b

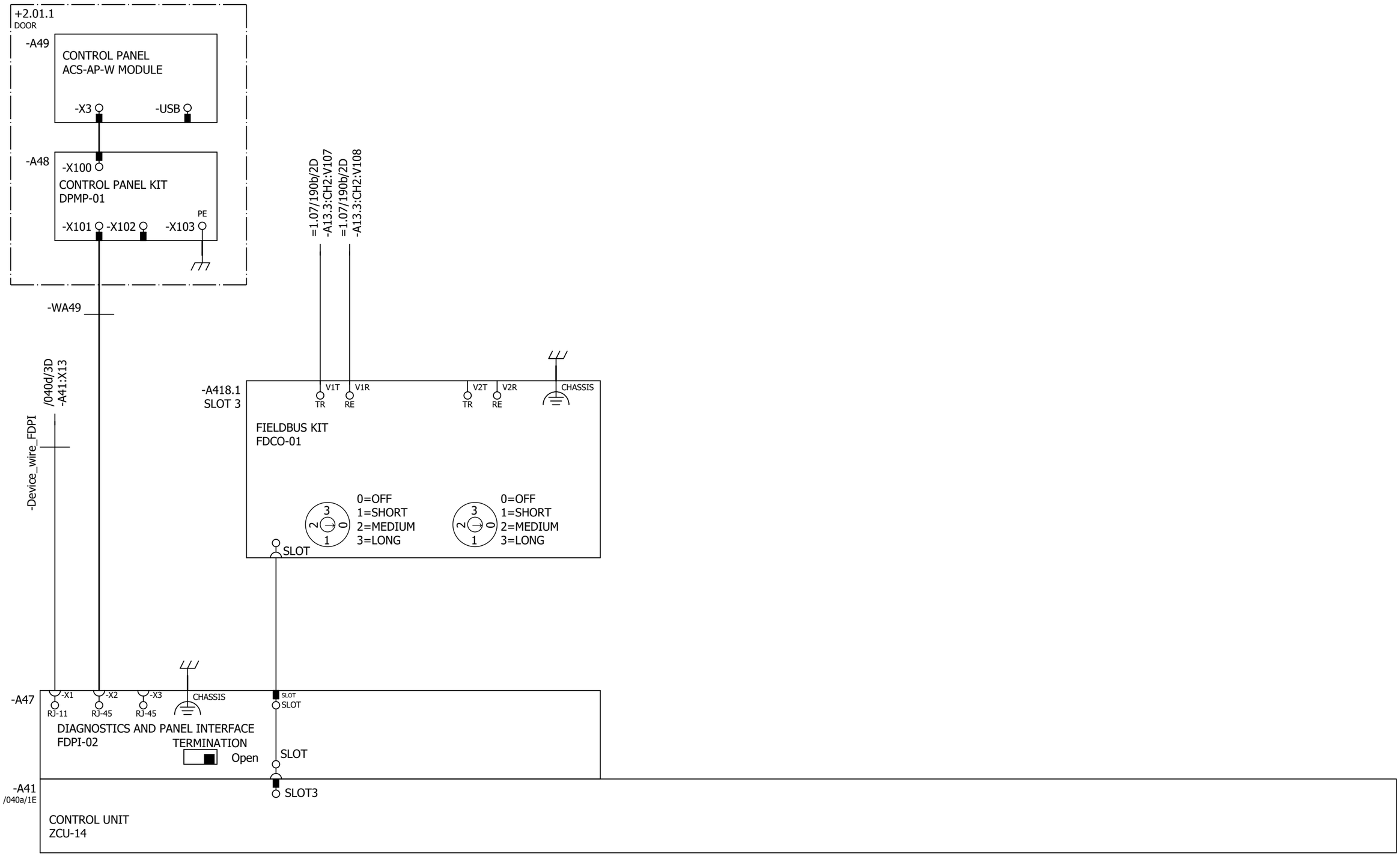

Cust. Doc. No.	Prep. Sky-Xin Zhang 02.08.2023	Title OPTION CARDS	Circuit diagram EFS2	Item Des.
Cust. Ref. No.	App.	INV2.02	SAP Doc. No.	= 2.02
Customer WMMP	Project Zhaka Jack-up Lift System	ACS880-107-0078A-3	EPLAN Doc. No. 3ABDC230674 - 2.02	+ 2.01.1
	Zhaka Jack-up Lift System-1	400V	ABB Ref. No.	Rev. .1 Sheet 041b
			Resp. Dept.	Cont. 061a

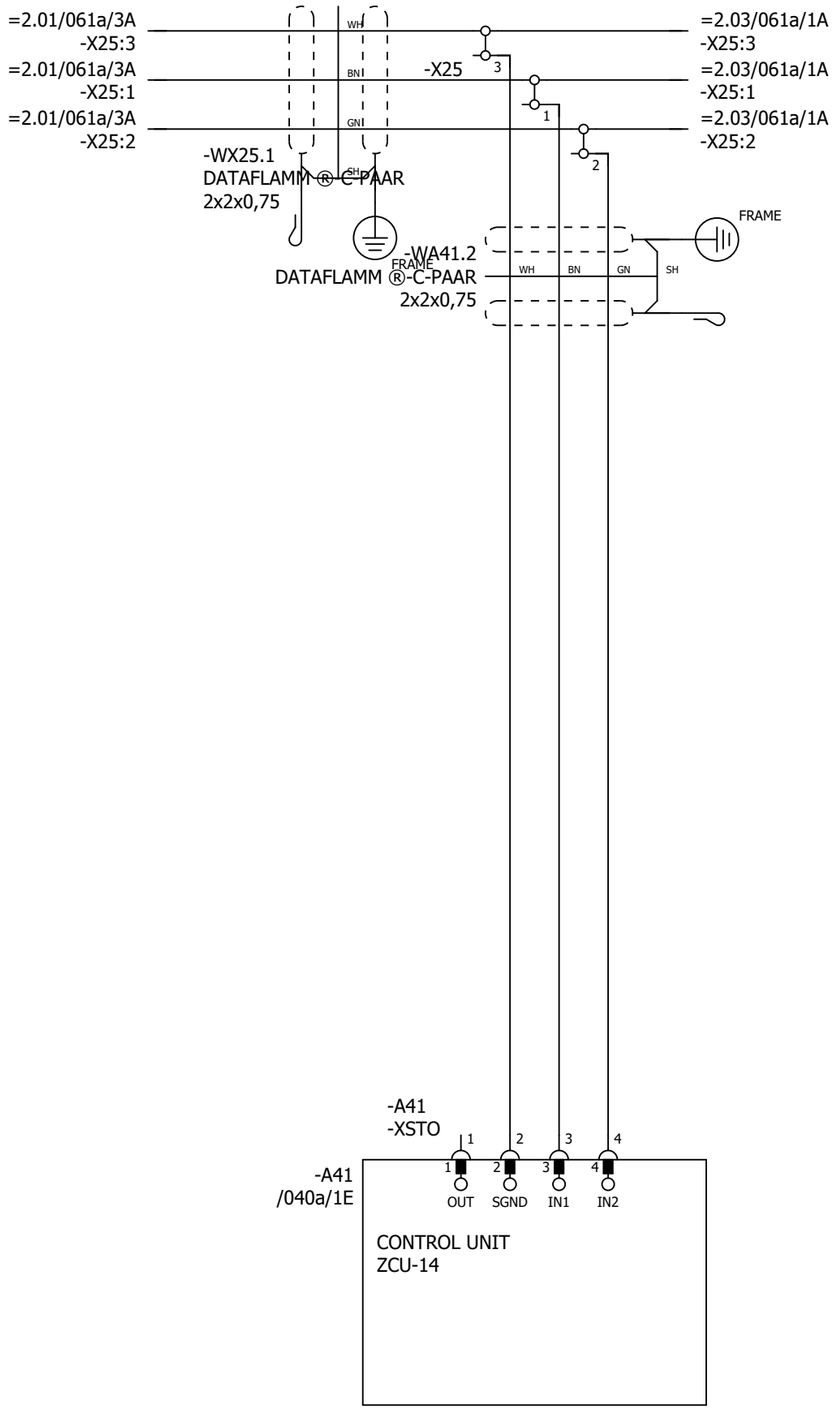

P345812 / 29711

SAFETY CIRCUIT
MACRO REVISION 6
RULES CONVERTED 19.7.2023

Cust. Doc. No.	Prep. Sky-Xin Zhang 02.08.2023	Title SAFETY CIRCUIT	Circuit diagram EFS2	Item Des.	
Cust. Ref. No.	App.	INV2.02	SAP Doc. No.	= 2.02	
Customer WMMP	Project Zhaka Jack-up Lift System	ACS880-107-0078A-3	EPLAN Doc. No. 3ABDC230674 - 2.02	+ 2.01.1	
	Zhaka Jack-up Lift System-1	400V	ABB Ref. No.	Rev. .1	Sheet 061a
			Resp. Dept.	Cont.	&MPC/Part list_1

Part list: 3ABDC230674DU02014

Item	Sort String	Qty.Str	Unit	Component Number	Description and text	Technical data
0010		1.000	ST		ACS880-107-0078A-3+A012+B053+C121+C132+	
0020		1.000	ST		_C206+E210+F272+F287+F288+G300+G307+G315	
0030		1.000	ST		_+G320+G330+G344+H352+H367+J400+K492+L50	
0040		1.000	ST		_3+P913+Q964	
0050		1.000	ST		=2.02	
0060		1.000	ST		+2.01.1,INU3	
0070		1.000	ST		Powerconversionequipment	
0080	-A41_MEM	1.000	PC	3AXD50000006010	MEMORY UNIT KIT ZMU-02	
0090	-T11	1.000	PC	3AUA0000120009-M	ACS880-104-0078A-3+P922	+P922
0100	SCREW	1.000	PC	3AFE68681481	SCREW K30X10 TORX	PT WN1452 ZN
0110	SOFTWARE	1.000	PC	3AUA0000153462	SOFTWARE PRIMARY CONTROL PROGRA	AINF6 FOR ZCU-12/14
0120		1.000	ST		R4imoduleDCfuse	
0130	-F11.1-2	2.000	PC	3AXD50000000219	FUSE FR27UQ69V160T/160A	6.921 CP URQ 27X60MM FERRULE;AR
0140		1.000	ST		R3i-R4imoduleDCfusebase	
0150	(-F11.1-2)	2.000	PC	3AUA0000089227	FUSE HOLDER FUSE BASE US271MI 150A	FUSE BASE US271MI 150A 800V
0160		1.000	ST		motorterminalR4i,coppercable	
0170	-X1	1.000	PC	3ABD50000000270	CONNECTOR PPAC-50	50 MM2;150 A;800V
0180	-X1	1.000	PC	3ABD50000000270	CONNECTOR PPAC-50	50 MM2;150 A;800V
0190	-X1	1.000	PC	3ABD50000000270	CONNECTOR PPAC-50	50 MM2;150 A;800V
0200		1.000	ST		24VDCsupplyZCU	
0210	-WA41_1	1.000	PC	3AXD50000005218	WIRE HARNESS 24VDC SUPPLY X51 ZCU V	HALOGEN FREE;X51_A51
0220		1.000	ST		Rooffancontrol	
0230	-WA41_3	1.000	PC	3AXD50000002688	WIRE HARNESS FAN CONTROL MAIN WIRE	HALOGEN FREE;X208_X26.3
0240		1.000	ST		Toprowmodulewireharness	
0250	-WT11	1.000	PC	3AXD50000002256	WIRE HARNESS R4I FUSE_MODULE V2	HALOGEN FREE;MAIN CIRCUIT WIRE SET
0260	-WX1	1.000	PC	3AXD50000002258	WIRE HARNESS R4I MODULE_OUTPUT TR V	HALOGEN FREE;MAIN CIRCUIT WIRE SET
0270		1.000	ST		Optionmodule	
0280	-A418.1	1.000	PC	3AUA0000107392	COMMUNIC. ADAPTER FDCO-01	
0290		1.000	ST		Controlpanel	
0300	-A47	1.000	PC	3AUA0000108650	FIELDBUS KIT FDPI-02	PANEL BUS ADAPTER
0310	-A48	1.000	PC	3AUA0000108878	CONTROL PANEL KIT DPMP-01	DPMP-01
0320	-A49	1.000	PC	3AXD50000025964	CONTROL PANEL ACS-AP-W MODULE	ASSISTANT PANEL WIRELESS CPU1
0330		1.000	ST		DCfusesupervision	

P345812 / 29711

Cust. Doc. No.	Prep.	Title PART LIST INV2.02 ACS880-107-0078A-3 400V	Item Des. = 2.02 +
Cust. Ref. No.	App.		SAP Doc. No.
Customer WMMP	Project Zhaka Jack-up Lift System Zhaka Jack-up Lift System-1		EPLAN Doc. No. 3ABDC230674 - 2.02
			ABB Ref. No. / Rev. / Sheet Part list_1
			Resp. Dept. / Cont. Part list_2

Part list: 3ABDC230674DU02014

Item	Sort String	Qty.Str	Unit	Component Number	Description and text	Technical data
0340	-K11.1-2	2.000	PC	3AXD50000021313	RELAY DEK_REL_G24/21	250 V;6 A;COIL 24VDC
0350		1.000	ST		FieldBus	
0360	-A438.1	1.000	PC	3AXD50000192779	OPTION MODULE FPNO-21	PROFINET IO
0370		1.000	ST		Supplementtorelay	
0380	(-K11.1)	1.000	PC	3AXD50000021312	TERMINAL BLOCK ST EB2_DIK_RD 2716693	2POLE, 6,15 MM PITCH;FOR DEK RELAYS

P345812 / 29711

Cust. Doc. No.	Prep.	Title PART LIST INV2.02 ACS880-107-0078A-3 400V	Item Des. = 2.02 +
Cust. Ref. No.	App.		SAP Doc. No.
Customer WMMP	Project Zhaka Jack-up Lift System Zhaka Jack-up Lift System-1		EPLAN Doc. No. 3ABDC230674 - 2.02
			ABB Ref. No. / Rev. / Sheet Part list_2
			Resp. Dept. / Cont. &EMA/1

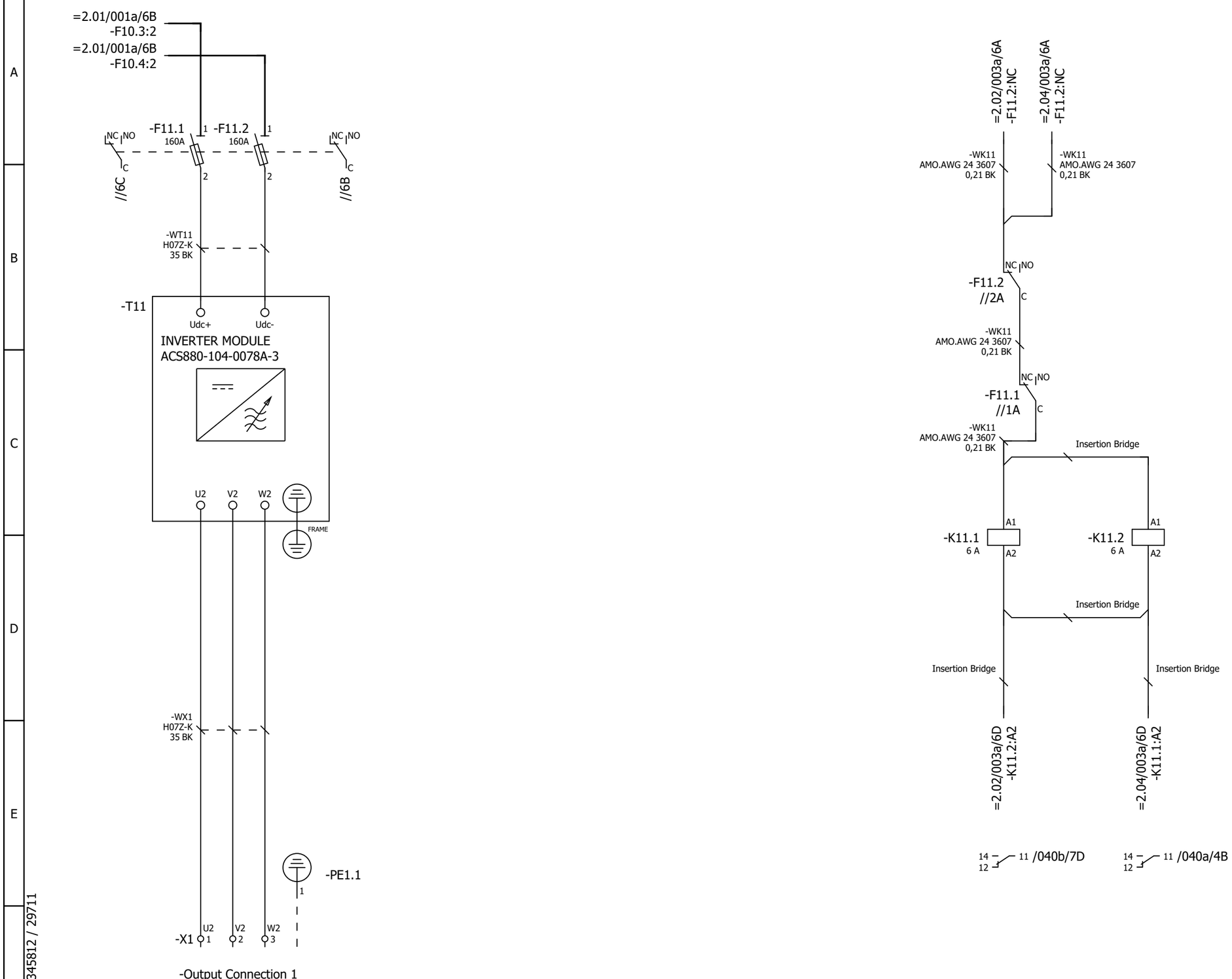

P345812 / 29711

Cust. Doc. No.	Prep. Sky-Xin Zhang 02.08.2023	Title MAIN CIRCUIT	Circuit diagram EFS2
Cust. Ref. No.	App.	INV2.03	SAP Doc. No.
Customer WMMP	Project Zhaka Jack-up Lift System	ACS880-107-0078A-3	EPLAN Doc. No. 3ABDC230674 - 2.03
	Zhaka Jack-up Lift System-1	400V	ABB Ref. No.
			Resp. Dept.

Item Des.
= 2.03
+ 2.01.1

Rev. .1 Sheet 003a
Cont. 040a

Control and status signals	Terminal	Pin
E-STOP FEEDBACK 1 - ESTOP ACTIVE	-XRO1	12
RUNNING 1 - RUNNING	-XRO2	22
FAULT (-1) 1 - NO FAULT	-XRO3	32

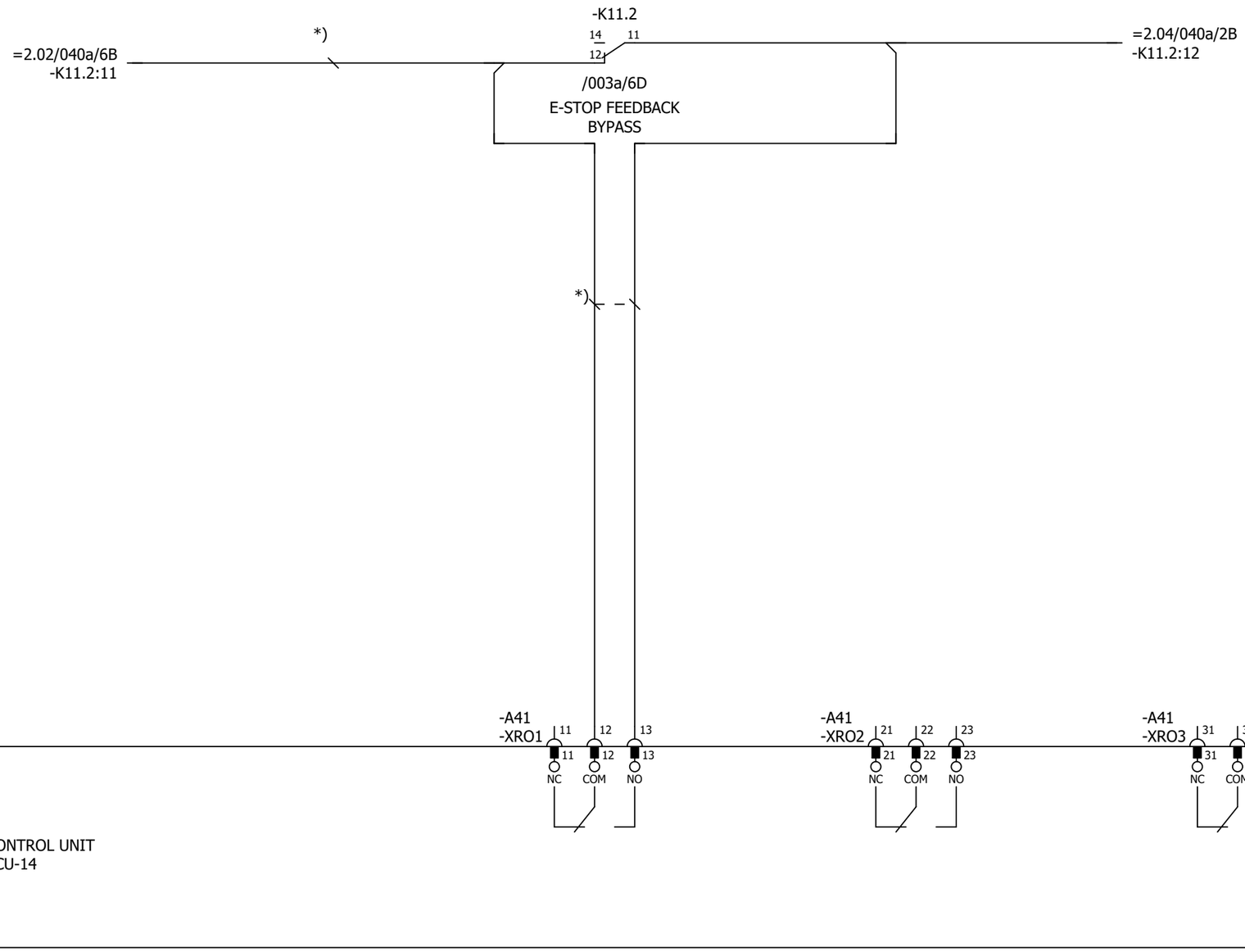

Cust. Doc. No.	Prep. Sky-Xin Zhang 02.08.2023	Title CONTROL BOARD INV2.03 ACS880-107-0078A-3 400V	Circuit diagram EFS2
Cust. Ref. No.	App.		SAP Doc. No.
Customer WMMP	Project Zhaka Jack-up Lift System Zhaka Jack-up Lift System-1		EPLAN Doc. No. 3ABDC230674 - 2.03
			ABB Ref. No.
			Resp. Dept.

Item Des.
= 2.03
+ 2.01.1

Rev. .1 Sheet 040a
Cont. 040b

Control and status signals	Terminal	Pin
DIGITAL INTERLOCK	-XD24	1
START/STOP 1 - START	-XDI	1
FORWARD/REVERSE 1 - REVERSE	-XDI	2
RESET	-XDI	3
EMERGENCY STOP 0 - ACTIVE	-XDI	4
NOT SPECIFIED	-XDI	5
DI6 NOT IN USE	-XDI	6
OUTPUT: READY	-XDIO	1
OUTPUT: RUNNING	-XDIO	2

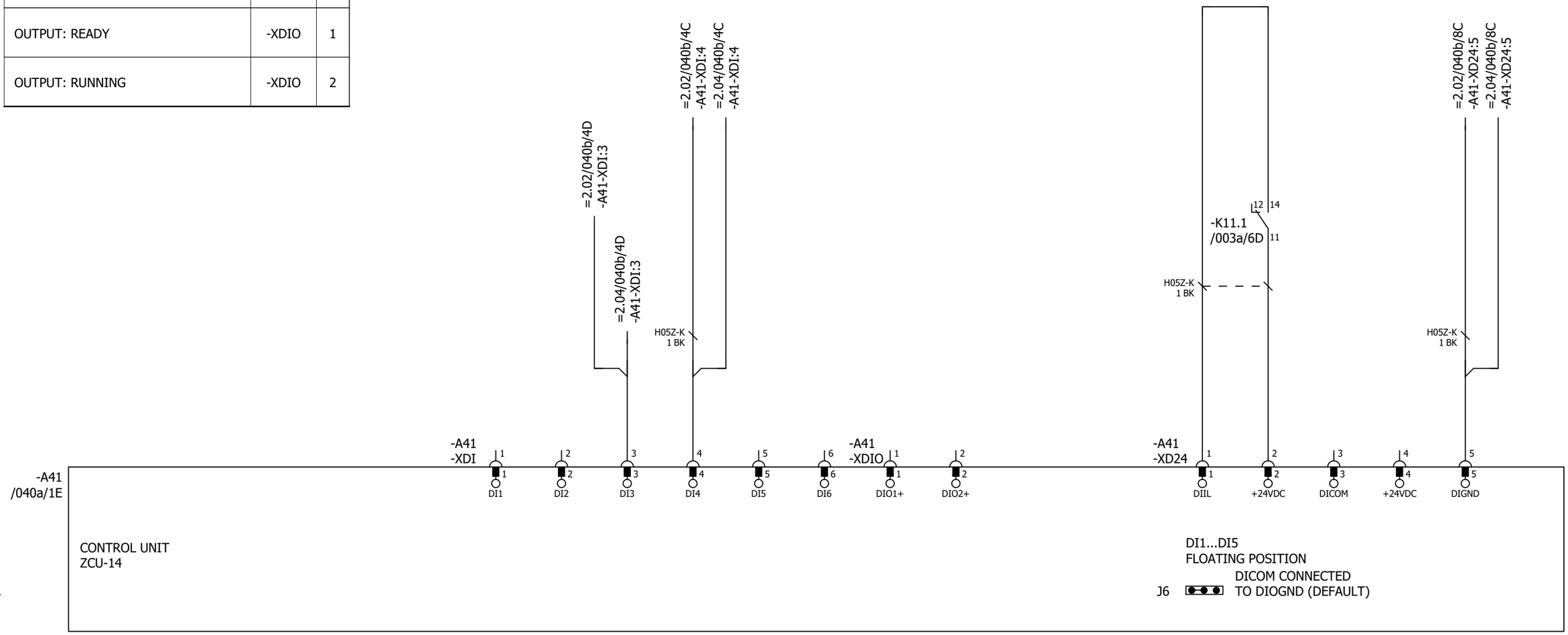

Cust. Doc. No.	Prep. Sky-Xin Zhang 02.08.2023	Title CONTROL BOARD INV2.03 ACS880-107-0078A-3 400V	Circuit diagram EFS2	Item Des.	
Cust. Ref. No.	App.		SAP Doc. No.	= 2.03 + 2.01.1	
Customer WMMP	Project Zhaka Jack-up Lift System Zhaka Jack-up Lift System-1		EPLAN Doc. No. 3ABDC230674 - 2.03		
			ABB Ref. No.	Rev. .1	Sheet 040b
			Resp. Dept.	Cont.	040c

Control and status signals	Terminal	Pin
MOTOR TEMP. MONITORING 0(2)…10V	-XAI	4
AI2 NOT SPECIFIED BY DEFAULT NOT IN USE 0(4)…20mA	-XAI	6
CURR SOU MOT TEMP MONIT 0(4)...20mA	-XAO	1
CURRENT 0(4)…20mA ↔ 0(4)…MOTOR CURRENT	-XAO	3

P345812 / 29711

Cust. Doc. No.	Prep. Sky-Xin Zhang 02.08.2023	Title CONTROL BOARD INV2.03 ACS880-107-0078A-3 400V	Circuit diagram EFS2
Cust. Ref. No.	App.		SAP Doc. No.
Customer WMMP	Project Zhaka Jack-up Lift System Zhaka Jack-up Lift System-1		EPLAN Doc. No. 3ABDC230674 - 2.03
			ABB Ref. No.
			Resp. Dept.

Item Des.
= 2.03
+ 2.01.1

Rev. .1 Sheet 040c
Cont. 040d

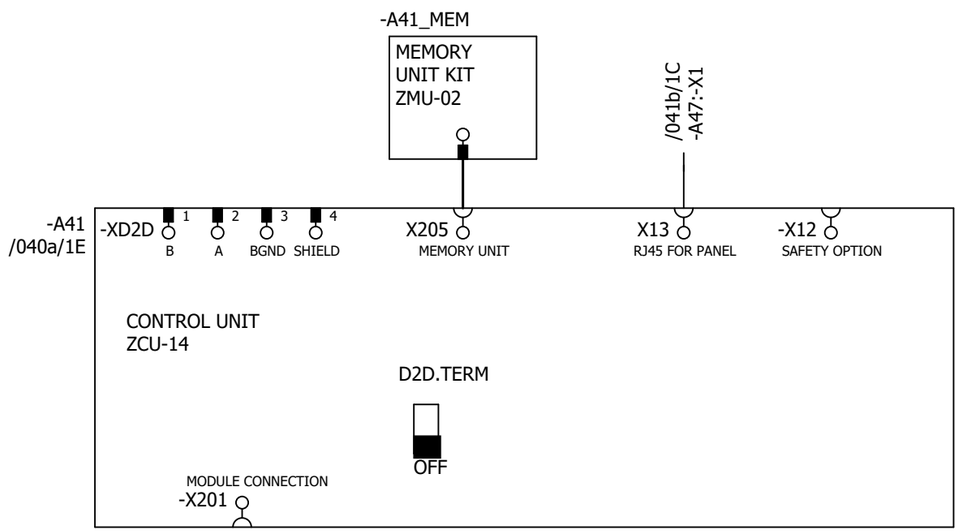

P345812 / 29711

Cust. Doc. No.	Prep. Sky-Xin Zhang 02.08.2023	Title CONTROL BOARD INV2.03 ACS880-107-0078A-3 400V	Circuit diagram EFS2
Cust. Ref. No.	App.		SAP Doc. No.
Customer WMMP	Project Zhaka Jack-up Lift System Zhaka Jack-up Lift System-1		EPLAN Doc. No. 3ABDC230674 - 2.03
			ABB Ref. No.
			Resp. Dept.

Item Des.	= 2.03 + 2.01.1
Rev. .1	Sheet 040d
Cont.	041a

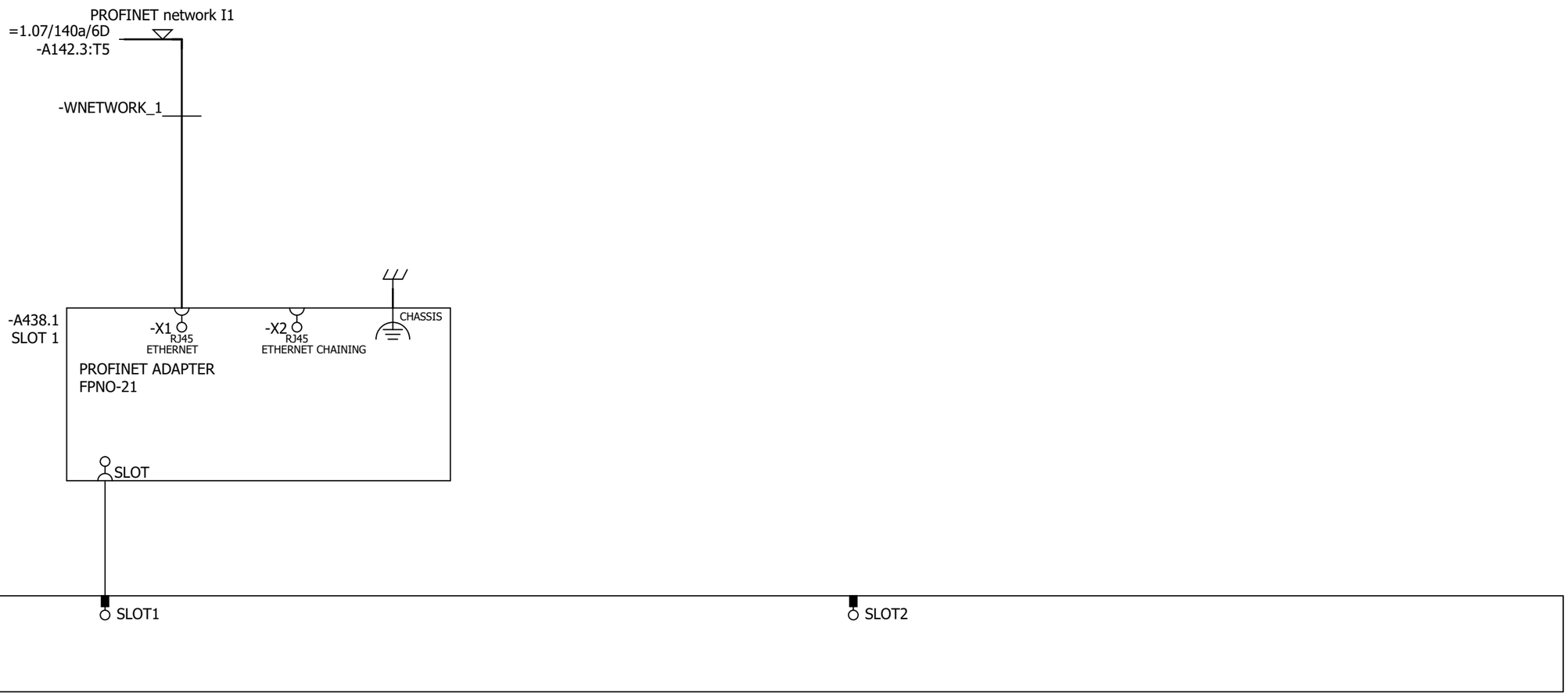

Cust. Doc. No.	Prep. Sky-Xin Zhang 02.08.2023	Title OPTION CARDS	Circuit diagram EFS2	Item Des.	
Cust. Ref. No.	App.	INV2.03	SAP Doc. No.	= 2.03	
Customer WMMP	Project Zhaka Jack-up Lift System	ACS880-107-0078A-3	EPLAN Doc. No. 3ABDC230674 - 2.03	+ 2.01.1	
	Zhaka Jack-up Lift System-1	400V	ABB Ref. No.	Rev. .1	Sheet 041a
			Resp. Dept.	Cont.	041b

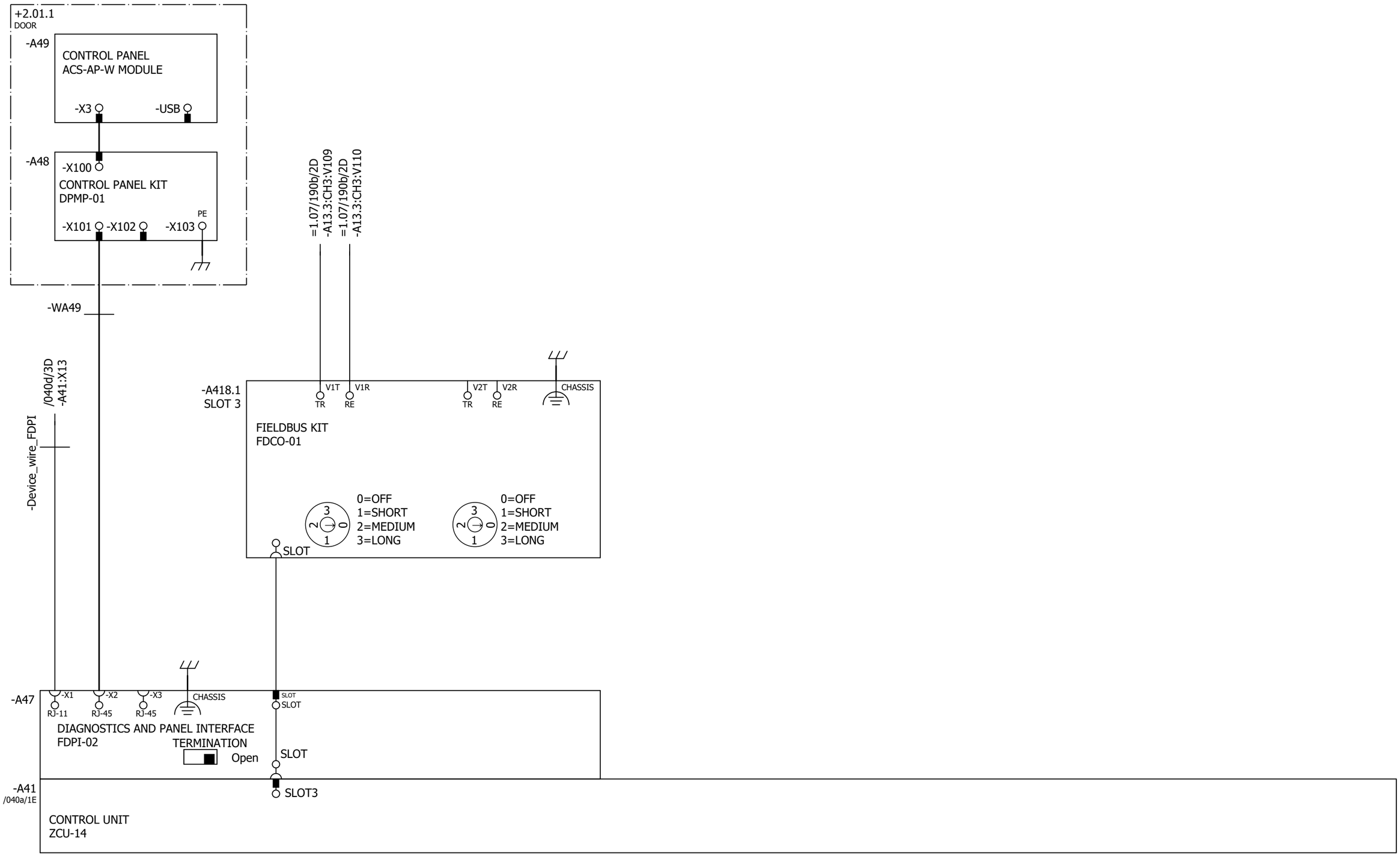

Cust. Doc. No.	Prep. Sky-Xin Zhang 02.08.2023	Title OPTION CARDS	Circuit diagram EFS2	Item Des.
Cust. Ref. No.	App.	INV2.03	SAP Doc. No.	= 2.03
Customer WMMP	Project Zhaka Jack-up Lift System	ACS880-107-0078A-3	EPLAN Doc. No. 3ABDC230674 - 2.03	+ 2.01.1
	Zhaka Jack-up Lift System-1	400V	ABB Ref. No.	Rev. .1 Sheet 041b
			Resp. Dept.	Cont. 061a

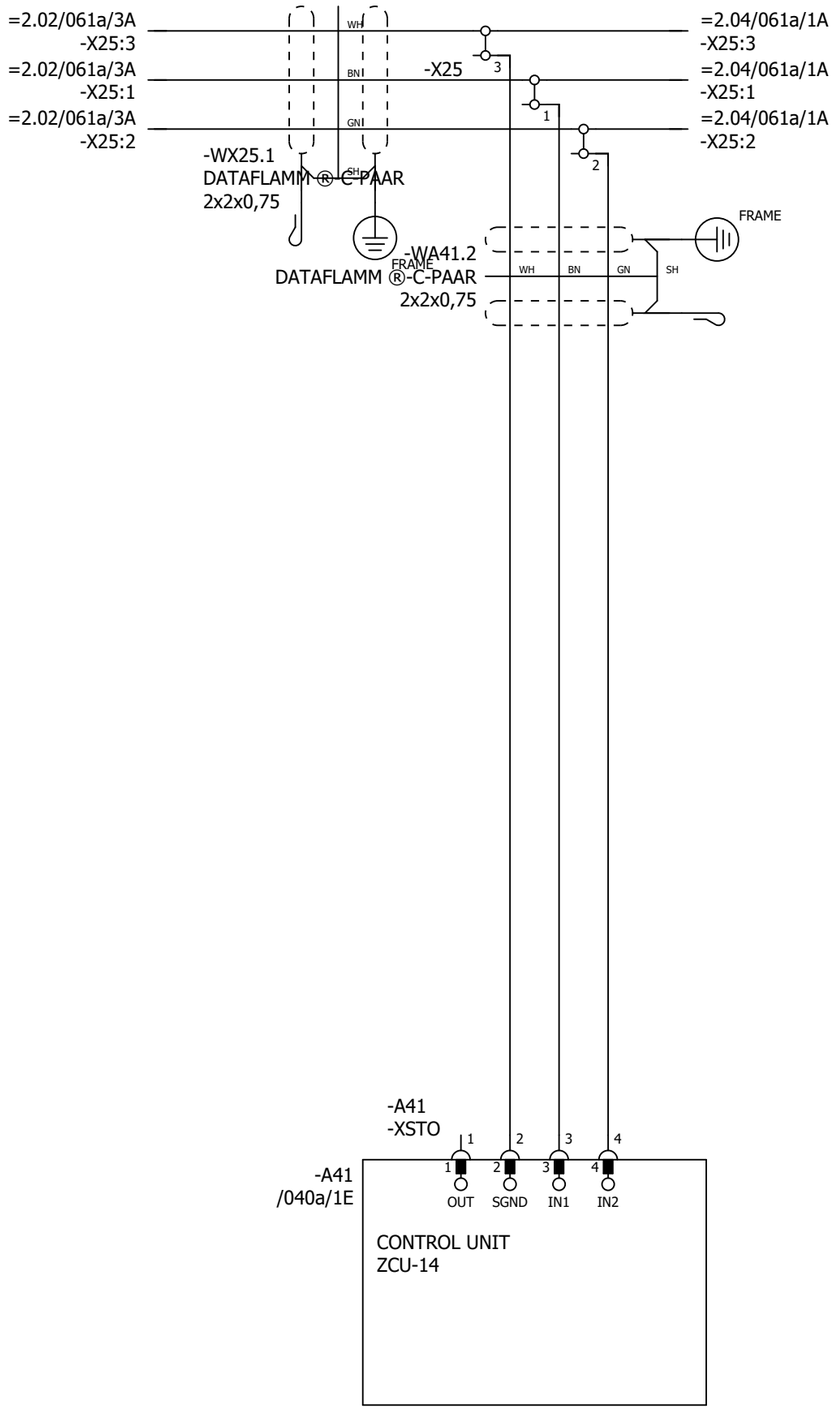

P345812 / 29711

SAFETY CIRCUIT
MACRO REVISION 6
RULES CONVERTED 19.7.2023

Cust. Doc. No.	Prep. Sky-Xin Zhang 02.08.2023	Title SAFETY CIRCUIT INV2.03 ACS880-107-0078A-3 400V	Circuit diagram EFS2
Cust. Ref. No.	App.		SAP Doc. No.
Customer WMMP	Project Zhaka Jack-up Lift System Zhaka Jack-up Lift System-1		EPLAN Doc. No. 3ABDC230674 - 2.03
			ABB Ref. No.
			Resp. Dept.

Item Des.
= 2.03
+ 2.01.1

Rev. .1 Sheet 061a

Cont. &MPC/Part list_1

Part list: 3ABDC230674DU02015

Item	Sort String	Qty.Str	Unit	Component Number	Description and text	Technical data
0010		1.000	ST		ACS880-107-0078A-3+A012+B053+C121+C132+	
0020		1.000	ST		_C206+E210+F272+F287+F288+G300+G307+G315	
0030		1.000	ST		_+G320+G330+G344+H352+H367+J400+K492+K49	
0040		1.000	ST		_3+L503+P913+Q964	
0050		1.000	ST		=2.03	
0060		1.000	ST		+2.01.1,INU3	
0070		1.000	ST		Powerconversionequipment	
0080	-A41_MEM	1.000	PC	3AXD50000006010	MEMORY UNIT KIT ZMU-02	
0090	-T11	1.000	PC	3AUA0000120009-M	ACS880-104-0078A-3+P922	+P922
0100	SCREW	1.000	PC	3AFE68681481	SCREW K30X10 TORX	PT WN1452 ZN
0110	SOFTWARE	1.000	PC	3AUA0000153462	SOFTWARE PRIMARY CONTROL PROGRA	AINF6 FOR ZCU-12/14
0120		1.000	ST		R4imoduleDCfuse	
0130	-F11.1-2	2.000	PC	3AXD50000000219	FUSE FR27UQ69V160T/160A	6.921 CP URQ 27X60MM FERRULE;AR
0140		1.000	ST		R3i-R4imoduleDCfusebase	
0150	(-F11.1-2)	2.000	PC	3AUA0000089227	FUSE HOLDER FUSE BASE US271MI 150A	FUSE BASE US271MI 150A 800V
0160		1.000	ST		motorterminalR4i,coppercable	
0170	-X1	1.000	PC	3ABD50000000270	CONNECTOR PPAC-50	50 MM2;150 A;800V
0180	-X1	1.000	PC	3ABD50000000270	CONNECTOR PPAC-50	50 MM2;150 A;800V
0190	-X1	1.000	PC	3ABD50000000270	CONNECTOR PPAC-50	50 MM2;150 A;800V
0200		1.000	ST		24VDCsupplyZCU	
0210	-WA41_1	1.000	PC	3AXD50000005218	WIRE HARNESS 24VDC SUPPLY X51 ZCU V	HALOGEN FREE;X51_A51
0220		1.000	ST		Rooffancontrol	
0230	-WA41_3	1.000	PC	3AXD50000002688	WIRE HARNESS FAN CONTROL MAIN WIRE	HALOGEN FREE;X208_X26.3
0240		1.000	ST		Toprowmodulewireharness	
0250	-WT11	1.000	PC	3AXD50000002256	WIRE HARNESS R4I FUSE_MODULE V2	HALOGEN FREE;MAIN CIRCUIT WIRE SET
0260	-WX1	1.000	PC	3AXD50000002258	WIRE HARNESS R4I MODULE_OUTPUT TR V	HALOGEN FREE;MAIN CIRCUIT WIRE SET
0270		1.000	ST		Optionmodule	
0280	-A418.1	1.000	PC	3AUA0000107392	COMMUNIC. ADAPTER FDCO-01	
0290		1.000	ST		Controlpanel	
0300	-A47	1.000	PC	3AUA0000108650	FIELDBUS KIT FDPI-02	PANEL BUS ADAPTER
0310	-A48	1.000	PC	3AUA0000108878	CONTROL PANEL KIT DPMP-01	DPMP-01
0320	-A49	1.000	PC	3AXD50000025964	CONTROL PANEL ACS-AP-W MODULE	ASSISTANT PANEL WIRELESS CPU1
0330		1.000	ST		DCfusesupervision	

P345812 / 29711

Cust. Doc. No.	Prep.	Title PART LIST INV2.03 ACS880-107-0078A-3 400V	Item Des. = 2.03 +
Cust. Ref. No.	App.		SAP Doc. No.
Customer WMMP	Project Zhaka Jack-up Lift System Zhaka Jack-up Lift System-1		EPLAN Doc. No. 3ABDC230674 - 2.03
			ABB Ref. No. / Rev. / Sheet Part list_1
			Resp. Dept. / Cont. Part list_2

Part list: 3ABDC230674DU02015

Item	Sort String	Qty.Str	Unit	Component Number	Description and text	Technical data
0340	-K11.1-2	2.000	PC	3AXD50000021313	RELAY DEK_REL_G24/21	250 V;6 A;COIL 24VDC
0350		1.000	ST		Profinetswitch	
0360		1.000	ST		FieldBus	
0370	-A438.1	1.000	PC	3AXD50000192779	OPTION MODULE FPNO-21	PROFINET IO
0380		1.000	ST		Supplementtorelay	
0390	(-K11.1)	1.000	PC	3AXD50000021312	TERMINAL BLOCK ST EB2_DIK_RD 2716693	2POLE, 6,15 MM PITCH;FOR DEK RELAYS

P345812 / 29711

Cust. Doc. No.	Prep.	Title PART LIST INV2.03 ACS880-107-0078A-3 400V	Item Des. = 2.03 +
Cust. Ref. No.	App.		SAP Doc. No.
Customer WMMP	Project Zhaka Jack-up Lift System Zhaka Jack-up Lift System-1		EPLAN Doc. No. 3ABDC230674 - 2.03
			ABB Ref. No. / Rev. / Sheet Part list_2
			Resp. Dept. / Cont. &EMA/1

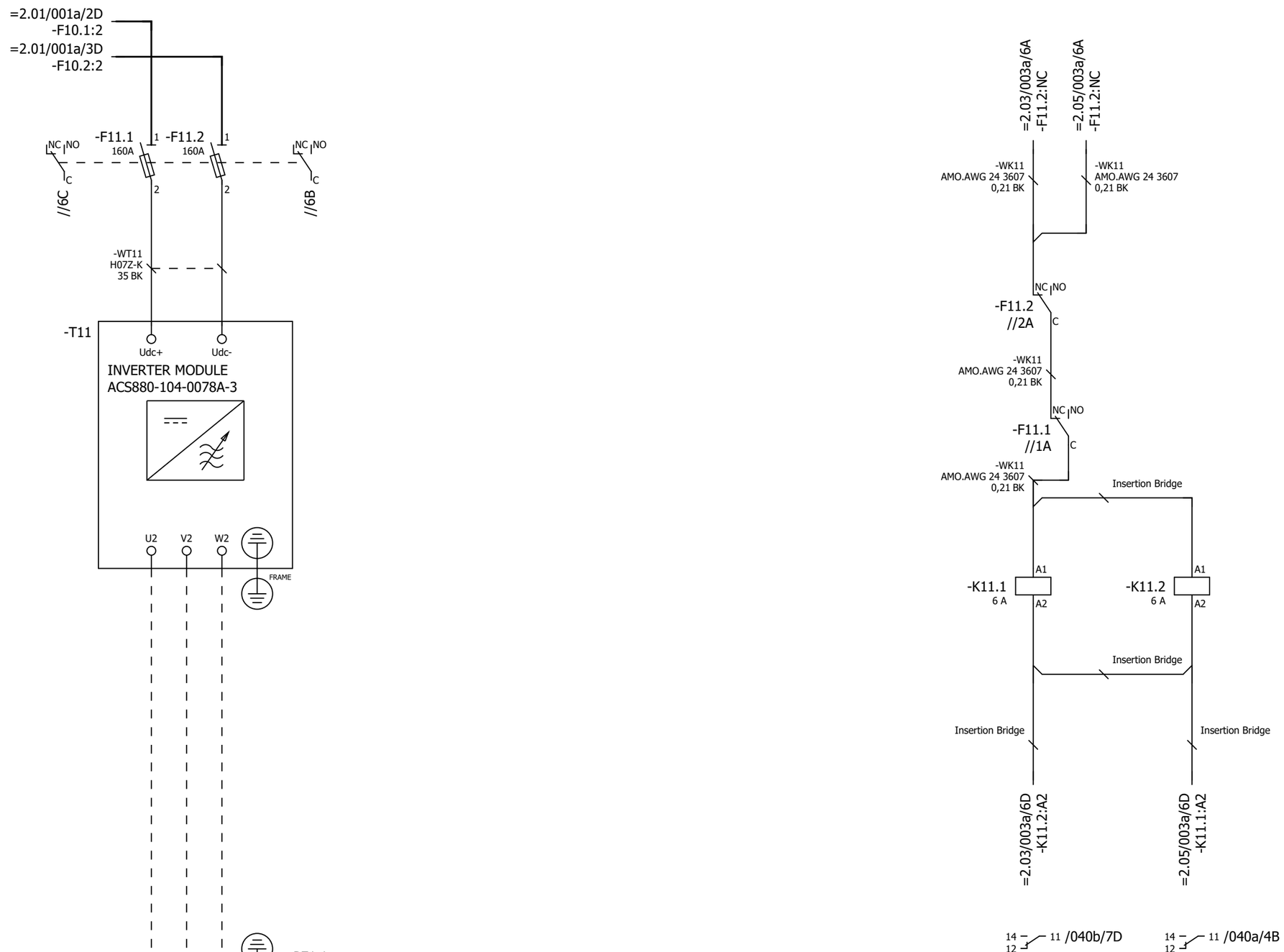

P345812 / 29711

Cust. Doc. No.	Prep. Sky-Xin Zhang 02.08.2023	Title MAIN CIRCUIT	Circuit diagram EFS2
Cust. Ref. No.	App.	INV2.04	SAP Doc. No.
Customer WMMP	Project Zhaka Jack-up Lift System	ACS880-107-0078A-3	EPLAN Doc. No. 3ABDC230674 - 2.04
	Zhaka Jack-up Lift System-1	400V	ABB Ref. No.
			Resp. Dept.

Item Des.
= 2.04
+ 2.01.1

Rev. .1 Sheet 003a
Cont. 040a

Control and status signals	Terminal	Pin
E-STOP FEEDBACK 1 - ESTOP ACTIVE	-XRO1	12
RUNNING 1 - RUNNING	-XRO2	22
FAULT (-1) 1 - NO FAULT	-XRO3	32

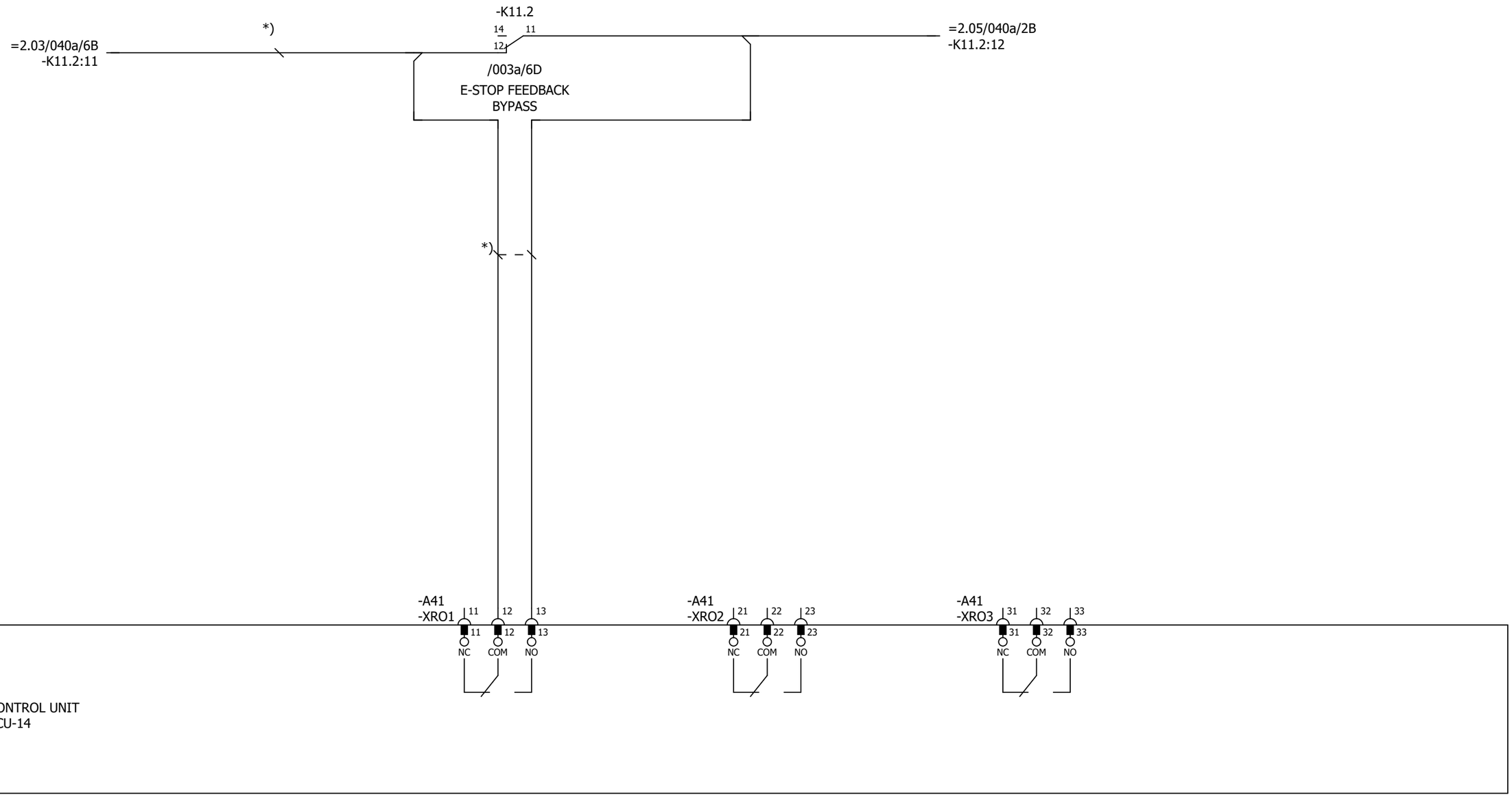

Cust. Doc. No.	Prep. Sky-Xin Zhang 02.08.2023	Title CONTROL BOARD INV2.04 ACS880-107-0078A-3 400V	Circuit diagram EFS2
Cust. Ref. No.	App.		SAP Doc. No.
Customer WMMP	Project Zhaka Jack-up Lift System Zhaka Jack-up Lift System-1		EPLAN Doc. No. 3ABDC230674 - 2.04
			ABB Ref. No.
			Resp. Dept.

Item Des.
= 2.04
+ 2.01.1

Rev. .1 Sheet 040a
Cont. 040b

Control and status signals	Terminal	Pin
DIGITAL INTERLOCK	-XD24	1
START/STOP 1 - START	-XDI	1
FORWARD/REVERSE 1 - REVERSE	-XDI	2
RESET	-XDI	3
EMERGENCY STOP 0 - ACTIVE	-XDI	4
NOT SPECIFIED	-XDI	5
DI6 NOT IN USE	-XDI	6
OUTPUT: READY	-XDIO	1
OUTPUT: RUNNING	-XDIO	2

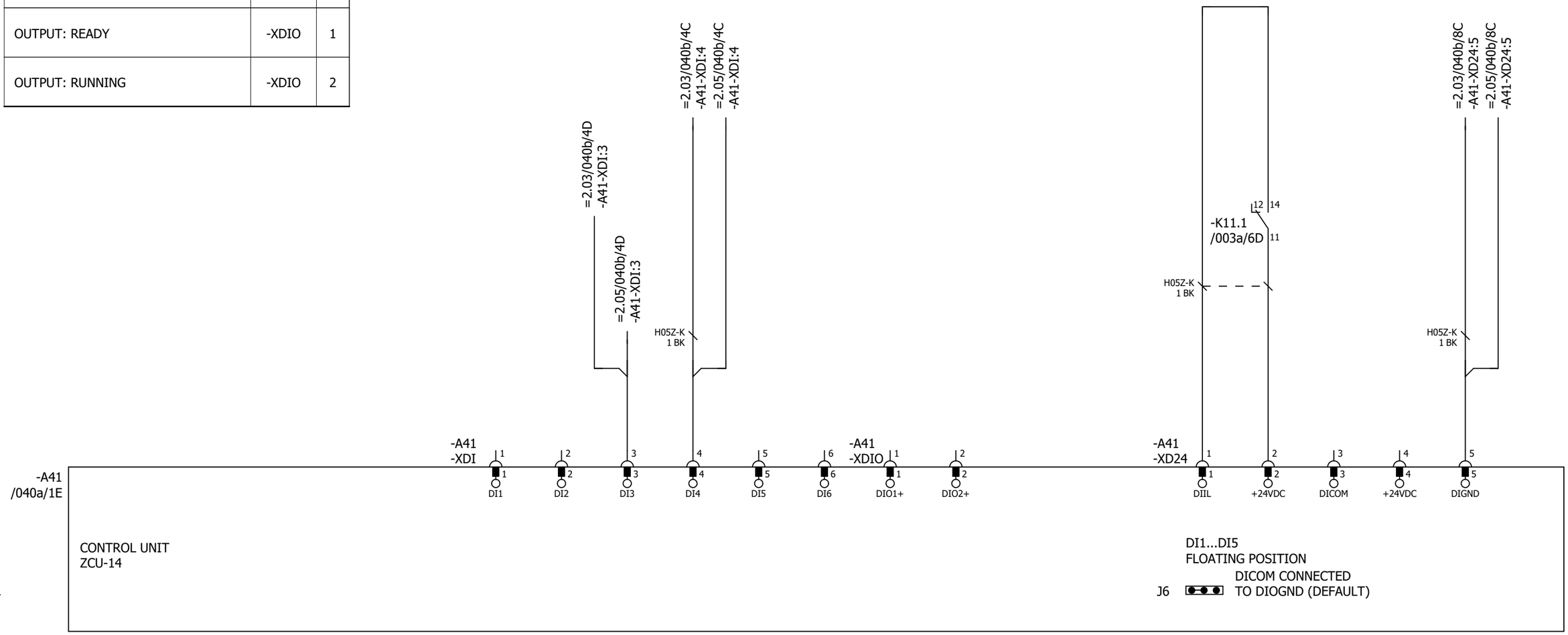

P345812 / 29711

Cust. Doc. No.	Prep. Sky-Xin Zhang 02.08.2023	Title CONTROL BOARD INV2.04 ACS880-107-0078A-3 400V	Circuit diagram EFS2
Cust. Ref. No.	App.		SAP Doc. No.
Customer WMMP	Project Zhaka Jack-up Lift System Zhaka Jack-up Lift System-1		EPLAN Doc. No. 3ABDC230674 - 2.04
			ABB Ref. No.
			Resp. Dept.

Item Des.
= 2.04
+ 2.01.1

Rev. .1 Sheet 040b
Cont. 040c

Control and status signals	Terminal	Pin
MOTOR TEMP. MONITORING 0(2)…10V	-XAI	4
AI2 NOT SPECIFIED BY DEFAULT NOT IN USE 0(4)…20mA	-XAI	6
CURR SOU MOT TEMP MONIT 0(4)...20mA	-XAO	1
CURRENT 0(4)…20mA ↔ 0(4)…MOTOR CURRENT	-XAO	3

P345812 / 29711

Cust. Doc. No.	Prep. Sky-Xin Zhang 02.08.2023	Title CONTROL BOARD INV2.04 ACS880-107-0078A-3 400V	Circuit diagram EFS2
Cust. Ref. No.	App.		SAP Doc. No.
Customer WMMP	Project Zhaka Jack-up Lift System Zhaka Jack-up Lift System-1		EPLAN Doc. No. 3ABDC230674 - 2.04
			ABB Ref. No.
			Resp. Dept.

Item Des.
= 2.04
+ 2.01.1

Rev. .1 Sheet 040c
Cont. 040d

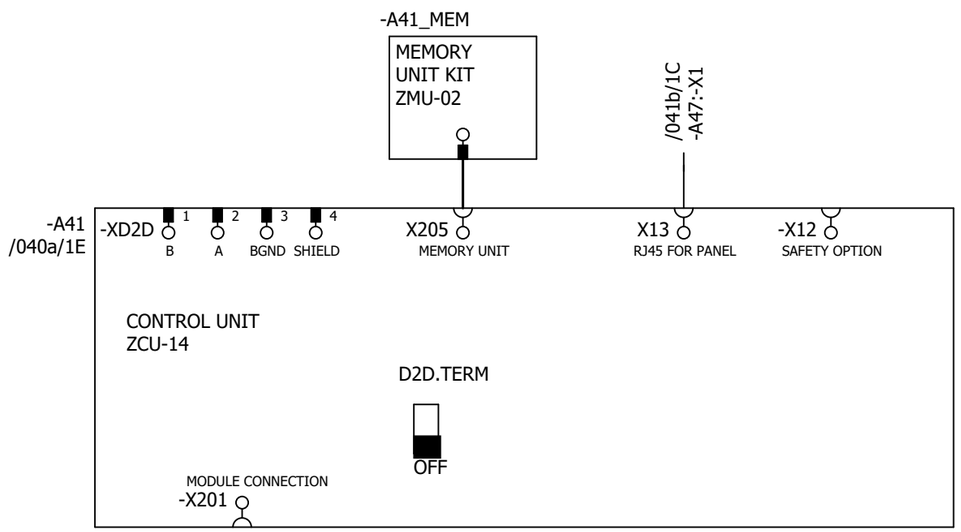

P345812 / 29711

Cust. Doc. No.	Prep. Sky-Xin Zhang 02.08.2023	Title CONTROL BOARD INV2.04 ACS880-107-0078A-3 400V	Circuit diagram EFS2
Cust. Ref. No.	App.		SAP Doc. No.
Customer WMMP	Project Zhaka Jack-up Lift System Zhaka Jack-up Lift System-1		EPLAN Doc. No. 3ABDC230674 - 2.04
			ABB Ref. No.
			Resp. Dept.

Item Des.	= 2.04 + 2.01.1
Rev. .1	Sheet 040d
Cont.	041a

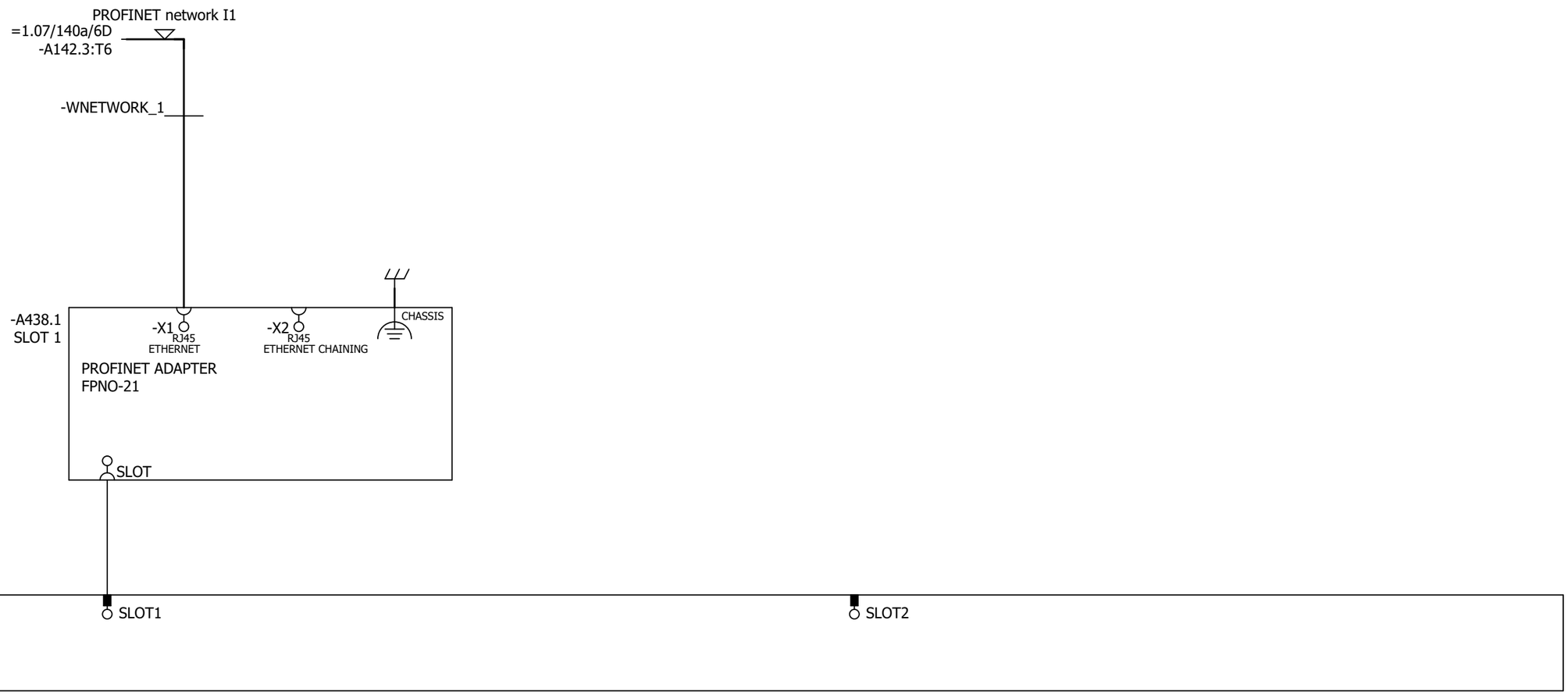

Cust. Doc. No.	Prep. Sky-Xin Zhang 02.08.2023	Title OPTION CARDS	Circuit diagram EFS2	Item Des.	
Cust. Ref. No.	App.	INV2.04	SAP Doc. No.	= 2.04	
Customer WMMP	Project Zhaka Jack-up Lift System	ACS880-107-0078A-3	EPLAN Doc. No. 3ABDC230674 - 2.04	+ 2.01.1	
	Zhaka Jack-up Lift System-1	400V	ABB Ref. No.	Rev. .1	Sheet 041a
			Resp. Dept.	Cont.	041b

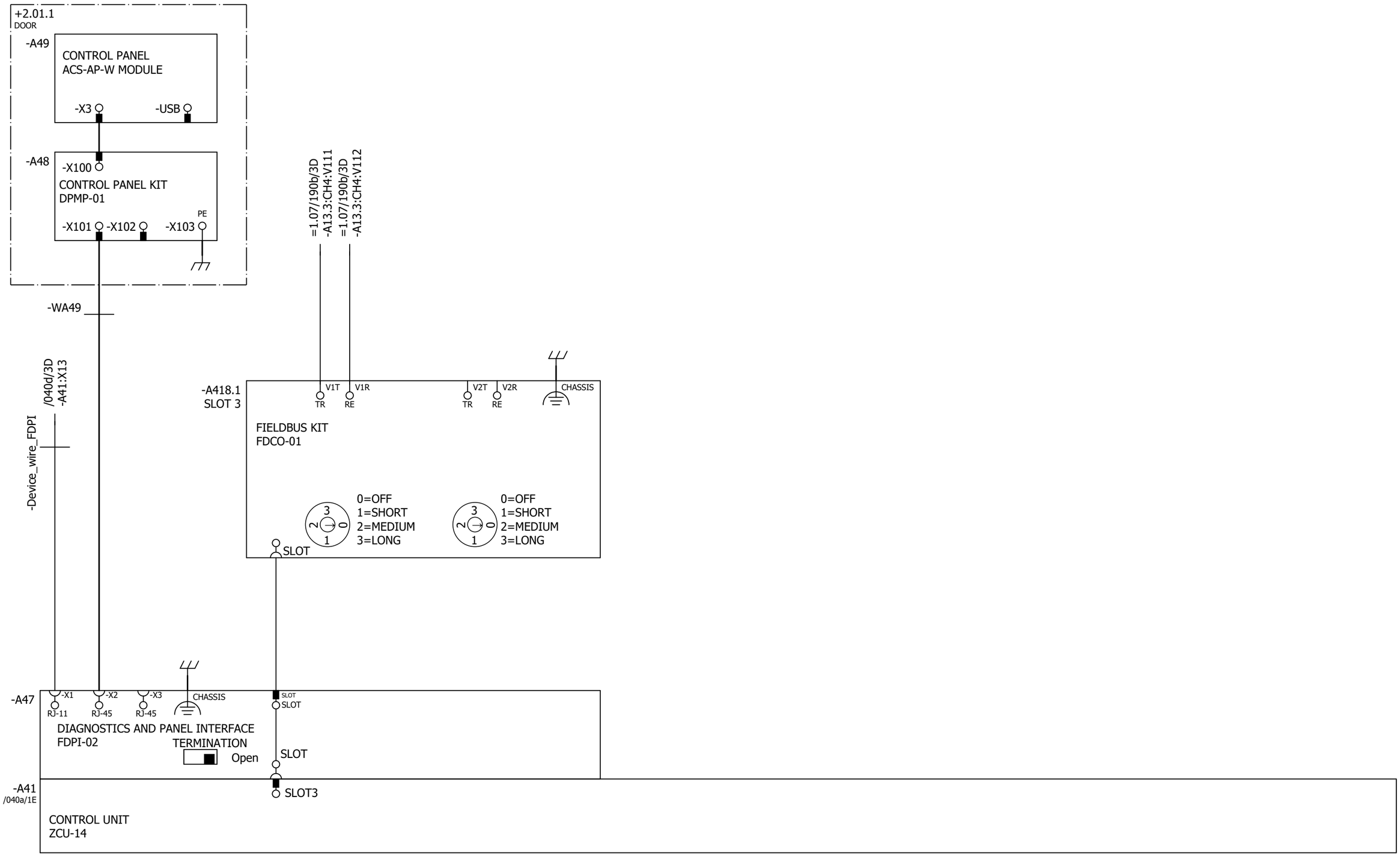

Cust. Doc. No.	Prep. Sky-Xin Zhang 02.08.2023	Title OPTION CARDS	Circuit diagram EFS2	Item Des.
Cust. Ref. No.	App.	INV2.04	SAP Doc. No.	= 2.04
Customer WMMP	Project Zhaka Jack-up Lift System	ACS880-107-0078A-3	EPLAN Doc. No. 3ABDC230674 - 2.04	+ 2.01.1
	Zhaka Jack-up Lift System-1	400V	ABB Ref. No.	Rev. .1 Sheet 041b
			Resp. Dept.	Cont. 061a

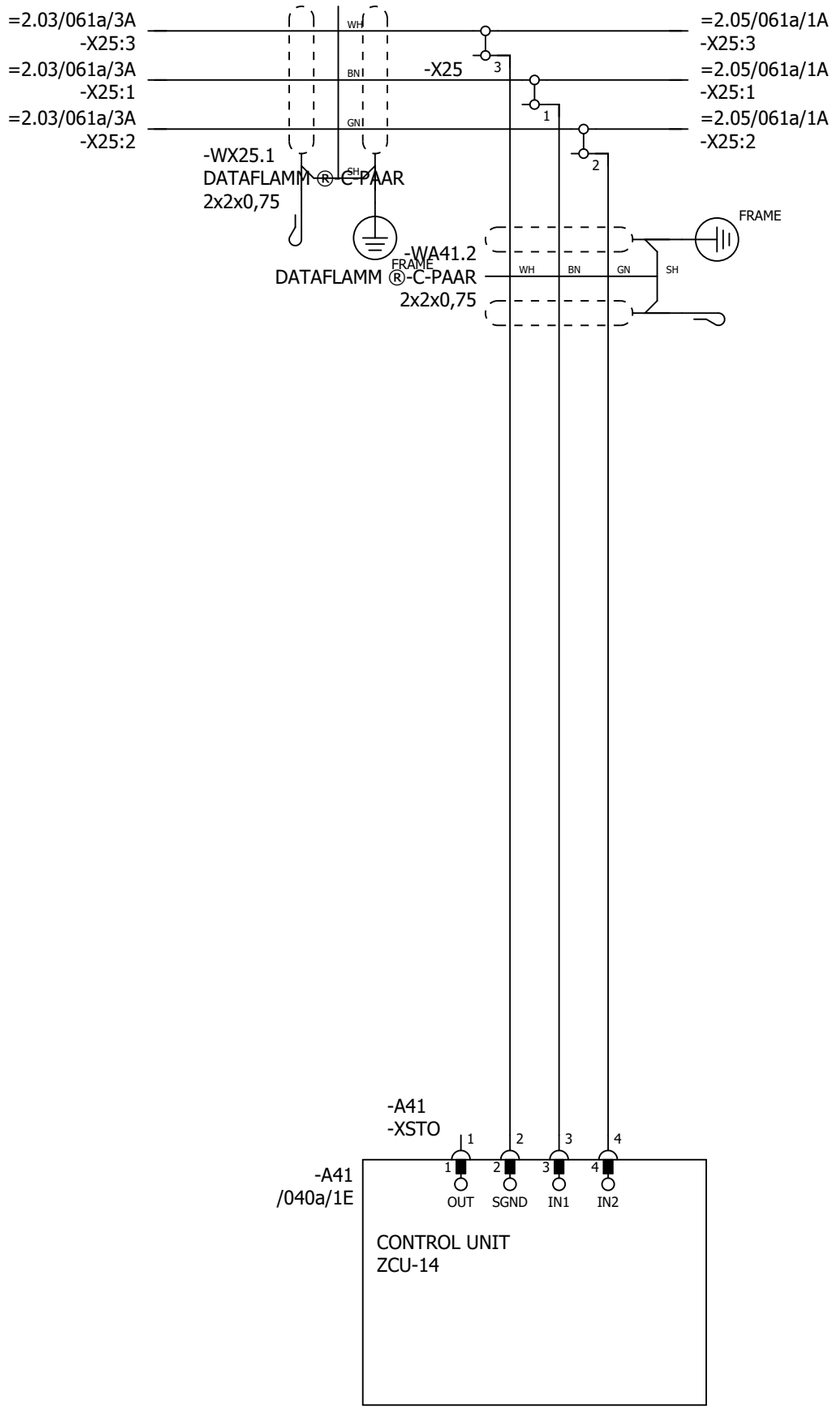

P345812 / 29711

SAFETY CIRCUIT
MACRO REVISION 6
RULES CONVERTED 19.7.2023

Cust. Doc. No.	Prep. Sky-Xin Zhang 02.08.2023	Title SAFETY CIRCUIT	Circuit diagram EFS2	Item Des.	
Cust. Ref. No.	App.	INV2.04	SAP Doc. No.	= 2.04	
Customer WMMP	Project Zhaka Jack-up Lift System	ACS880-107-0078A-3	EPLAN Doc. No. 3ABDC230674 - 2.04	+ 2.01.1	
	Zhaka Jack-up Lift System-1	400V	ABB Ref. No.	Rev. .1	Sheet 061a
			Resp. Dept.	Cont.	&MPC/Part list_1

Part list: 3ABDC230674DU02016

Item	Sort String	Qty.Str	Unit	Component Number	Description and text	Technical data
0010		1.000	ST		ACS880-107-0078A-3+A012+B053+C121+C132+	
0020		1.000	ST		_C206+E210+F272+F287+F288+G300+G307+G315	
0030		1.000	ST		_+G320+G330+G344+H352+H367+J400+K492+L50	
0040		1.000	ST		_3+P913+Q964	
0050		1.000	ST		=2.04	
0060		1.000	ST		+2.01.1,INU3	
0070		1.000	ST		Powerconversionequipment	
0080	-A41_MEM	1.000	PC	3AXD50000006010	MEMORY UNIT KIT ZMU-02	
0090	-T11	1.000	PC	3AUA0000120009-M	ACS880-104-0078A-3+P922	+P922
0100	SCREW	1.000	PC	3AFE68681481	SCREW K30X10 TORX	PT WN1452 ZN
0110	SOFTWARE	1.000	PC	3AUA0000153462	SOFTWARE PRIMARY CONTROL PROGRA	AINF6 FOR ZCU-12/14
0120		1.000	ST		R4imoduleDCfuse	
0130	-F11.1-2	2.000	PC	3AXD50000000219	FUSE FR27UQ69V160T/160A	6.921 CP URQ 27X60MM FERRULE;AR
0140		1.000	ST		R3i-R4imoduleDCfusebase	
0150	(-F11.1-2)	2.000	PC	3AUA0000089227	FUSE HOLDER FUSE BASE US271MI 150A	FUSE BASE US271MI 150A 800V
0160		1.000	ST		24VDCsupplyZCU	
0170	-WA41_1	1.000	PC	3AXD50000005218	WIRE HARNESS 24VDC SUPPLY X51 ZCU V	HALOGEN FREE;X51_A51
0180		1.000	ST		Rooffancontrol	
0190	-WA41_3	1.000	PC	3AXD50000002688	WIRE HARNESS FAN CONTROL MAIN WIRE	HALOGEN FREE;X208_X26.3
0200		1.000	ST		Bottomrowmodulewireharness	
0210	-WT11	1.000	PC	3AXD50000002418	WIRE HARNESS R4I FUSE_MODULE BR V2	HALOGEN FREE;MAIN CIRCUIT WIRE SET
0220		1.000	ST		Optionmodule	
0230	-A418.1	1.000	PC	3AUA0000107392	COMMUNIC. ADAPTER FDCO-01	
0240		1.000	ST		Controlpanel	
0250	-A47	1.000	PC	3AUA0000108650	FIELDBUS KIT FDPI-02	PANEL BUS ADAPTER
0260	-A48	1.000	PC	3AUA0000108878	CONTROL PANEL KIT DPMP-01	DPMP-01
0270	-A49	1.000	PC	3AXD50000025964	CONTROL PANEL ACS-AP-W MODULE	ASSISTANT PANEL WIRELESS CPU1
0280		1.000	ST		DCfusesupervision	
0290	-K11.1-2	2.000	PC	3AXD50000021313	RELAY DEK_REL_G24/21	250 V;6 A;COIL 24VDC
0300		1.000	ST		FieldBus	
0310	-A438.1	1.000	PC	3AXD50000192779	OPTION MODULE FPNO-21	PROFINET IO
0320		1.000	ST		Supplementtorelay	
0330	(-K11.1)	1.000	PC	3AXD50000021312	TERMINAL BLOCK ST EB2_DIK_RD 2716693	2POLE, 6,15 MM PITCH;FOR DEK RELAYS

P345812 / 29711

Cust. Doc. No.	Prep.	Title PART LIST INV2.04 ACS880-107-0078A-3 400V	Item Des. = 2.04 +
Cust. Ref. No.	App.		SAP Doc. No.
Customer WMMP	Project Zhaka Jack-up Lift System Zhaka Jack-up Lift System-1		EPLAN Doc. No. 3ABDC230674 - 2.04
			ABB Ref. No. / Rev. / Sheet Part list_1
			Resp. Dept. / Cont. &EMA/1

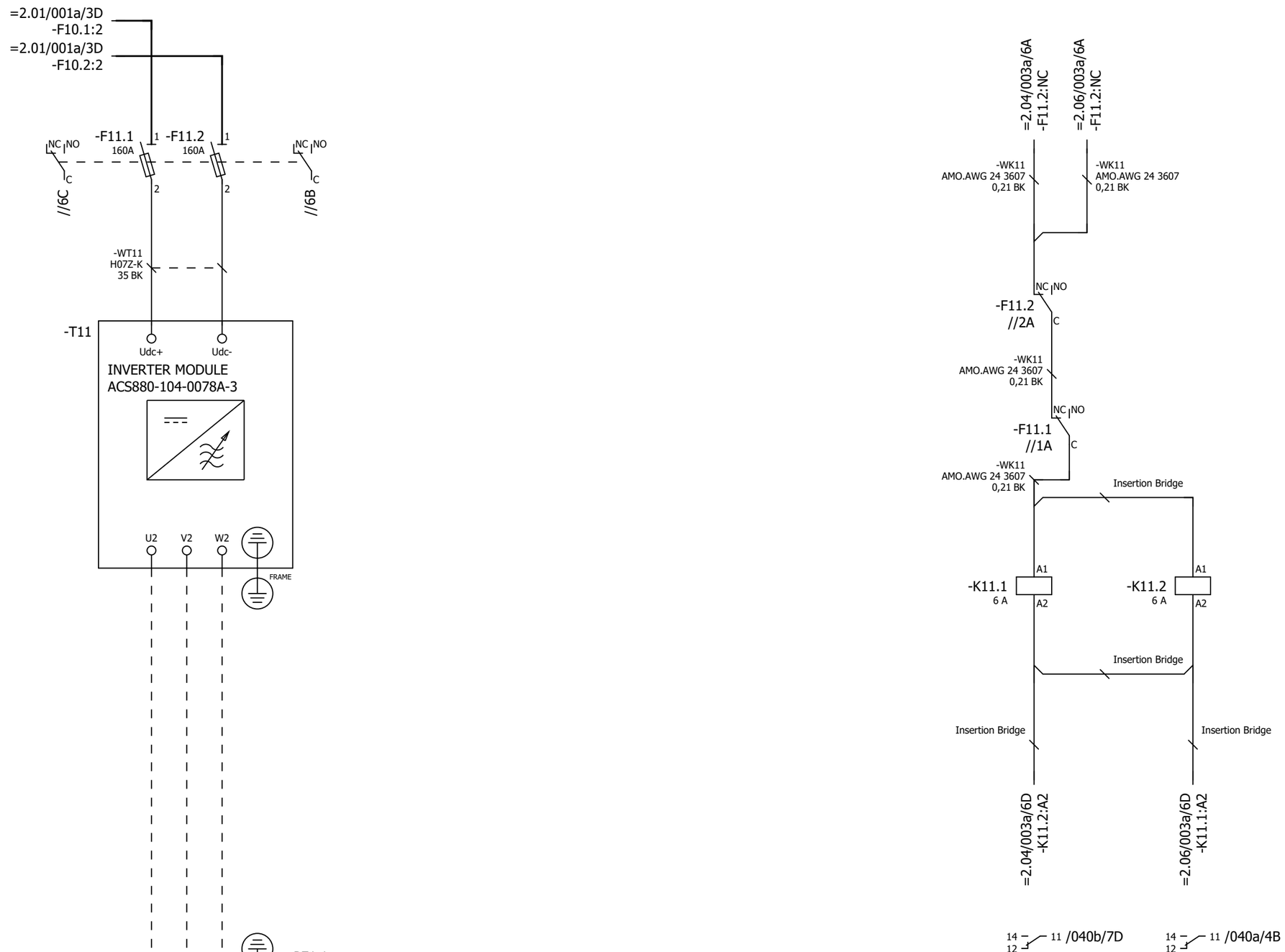

P345812 / 29711

Cust. Doc. No.	Prep. Sky-Xin Zhang 02.08.2023	Title MAIN CIRCUIT	Circuit diagram EFS2
Cust. Ref. No.	App.	INV2.05	SAP Doc. No.
Customer WMMP	Project Zhaka Jack-up Lift System	ACS880-107-0078A-3	EPLAN Doc. No. 3ABDC230674 - 2.05
	Zhaka Jack-up Lift System-1	400V	ABB Ref. No.
			Resp. Dept.

Item Des.
= 2.05
+ 2.01.1

Rev. .1 Sheet 003a
Cont. 040a

Control and status signals	Terminal	Pin
E-STOP FEEDBACK 1 - ESTOP ACTIVE	-XRO1	12
RUNNING 1 - RUNNING	-XRO2	22
FAULT (-1) 1 - NO FAULT	-XRO3	32

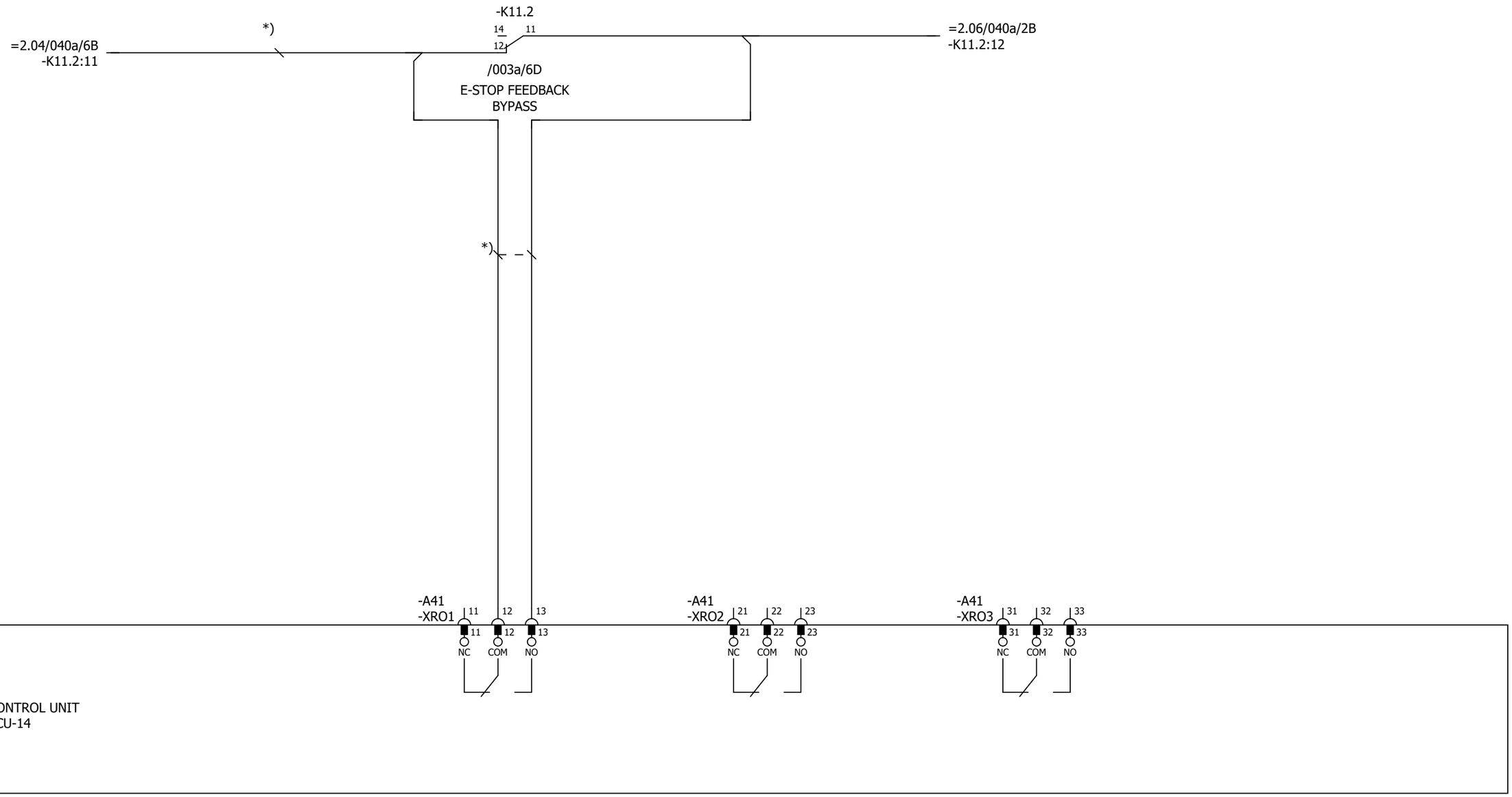

Cust. Doc. No.	Prep. Sky-Xin Zhang 02.08.2023	Title CONTROL BOARD INV2.05 ACS880-107-0078A-3 400V	Circuit diagram EFS2
Cust. Ref. No.	App.		SAP Doc. No.
Customer WMMP	Project Zhaka Jack-up Lift System Zhaka Jack-up Lift System-1		EPLAN Doc. No. 3ABDC230674 - 2.05
			ABB Ref. No.
			Resp. Dept.

Item Des.
= 2.05
+ 2.01.1

Rev. .1 Sheet 040a
Cont. 040b

Control and status signals	Terminal	Pin
DIGITAL INTERLOCK	-XD24	1
START/STOP 1 - START	-XDI	1
FORWARD/REVERSE 1 - REVERSE	-XDI	2
RESET	-XDI	3
EMERGENCY STOP 0 - ACTIVE	-XDI	4
NOT SPECIFIED	-XDI	5
DI6 NOT IN USE	-XDI	6
OUTPUT: READY	-XDIO	1
OUTPUT: RUNNING	-XDIO	2

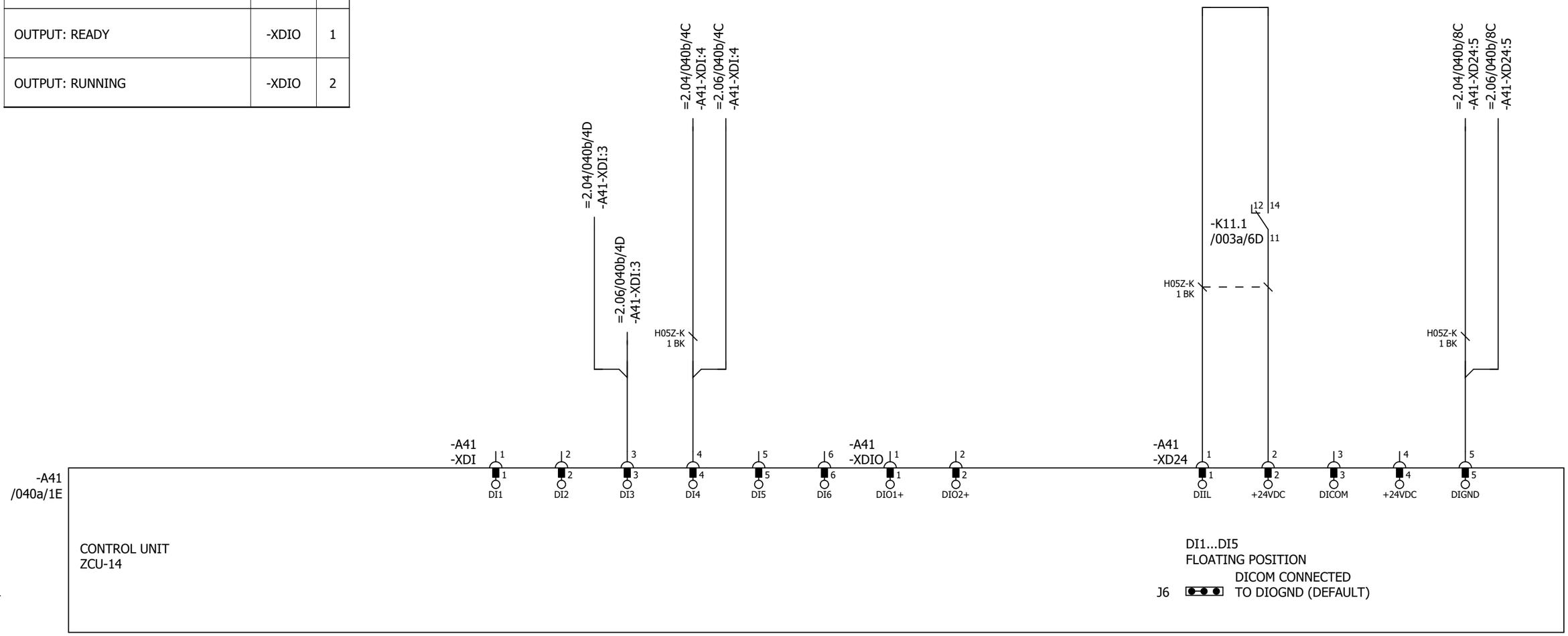

Cust. Doc. No.	Prep. Sky-Xin Zhang 02.08.2023	Title CONTROL BOARD	Circuit diagram EFS2	Item Des.	
Cust. Ref. No.	App.	INV2.05	SAP Doc. No.	= 2.05	
Customer WMMP	Project Zhaka Jack-up Lift System	ACS880-107-0078A-3	EPLAN Doc. No. 3ABDC230674 - 2.05	+ 2.01.1	
	Zhaka Jack-up Lift System-1	400V	ABB Ref. No.	Rev. .1	Sheet 040b
			Resp. Dept.	Cont.	040c

Control and status signals	Terminal	Pin
MOTOR TEMP. MONITORING 0(2)…10V	-XAI	4
AI2 NOT SPECIFIED BY DEFAULT NOT IN USE 0(4)…20mA	-XAI	6
CURR SOU MOT TEMP MONIT 0(4)...20mA	-XAO	1
CURRENT 0(4)…20mA ↔ 0(4)…MOTOR CURRENT	-XAO	3

P345812 / 29711

Cust. Doc. No.	Prep. Sky-Xin Zhang 02.08.2023	Title CONTROL BOARD INV2.05 ACS880-107-0078A-3 400V	Circuit diagram EFS2
Cust. Ref. No.	App.		SAP Doc. No.
Customer WMMP	Project Zhaka Jack-up Lift System Zhaka Jack-up Lift System-1		EPLAN Doc. No. 3ABDC230674 - 2.05
			ABB Ref. No.
			Resp. Dept.

Item Des.
= 2.05
+ 2.01.1

Rev. .1 Sheet 040c
Cont. 040d

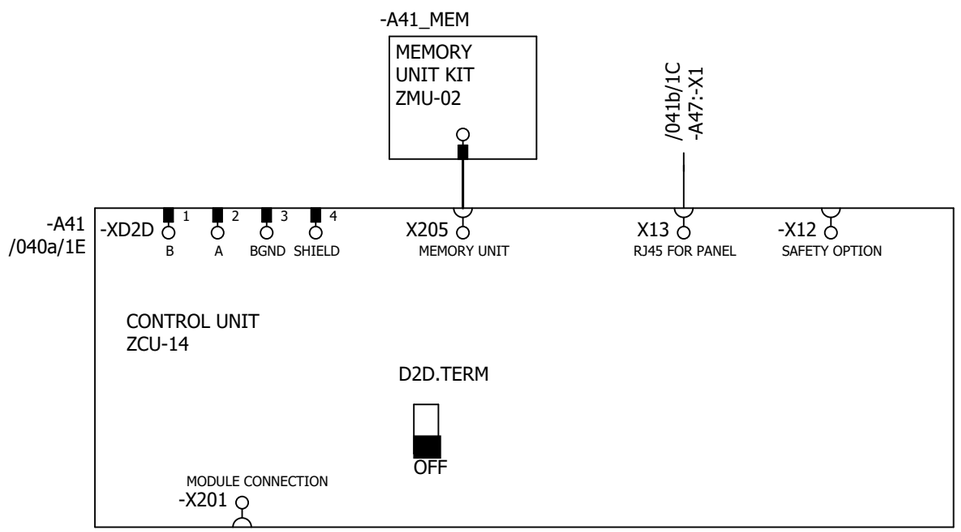

P345812 / 29711

Cust. Doc. No.	Prep. Sky-Xin Zhang 02.08.2023	Title CONTROL BOARD INV2.05 ACS880-107-0078A-3 400V	Circuit diagram EFS2
Cust. Ref. No.	App.		SAP Doc. No.
Customer WMMP	Project Zhaka Jack-up Lift System Zhaka Jack-up Lift System-1		EPLAN Doc. No. 3ABDC230674 - 2.05
			ABB Ref. No.
			Resp. Dept.

Item Des.	= 2.05 + 2.01.1
Rev. .1	Sheet 040d
Cont.	041a

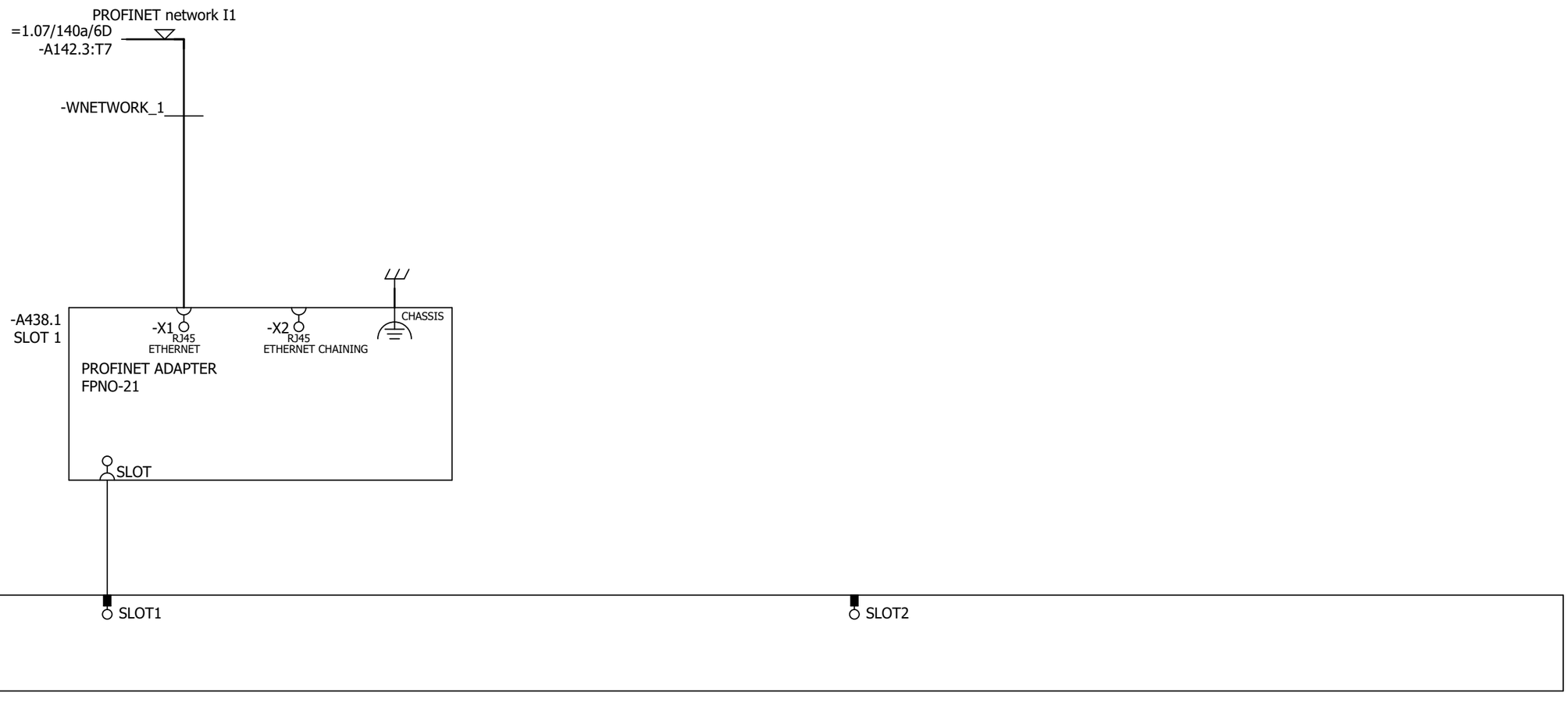

Cust. Doc. No.	Prep. Sky-Xin Zhang 02.08.2023	Title OPTION CARDS	Circuit diagram EFS2	Item Des.	
Cust. Ref. No.	App.	INV2.05	SAP Doc. No.	= 2.05	
Customer WMMP	Project Zhaka Jack-up Lift System	ACS880-107-0078A-3	EPLAN Doc. No. 3ABDC230674 - 2.05	+ 2.01.1	
	Zhaka Jack-up Lift System-1	400V	ABB Ref. No.	Rev. .1	Sheet 041a
			Resp. Dept.	Cont.	041b

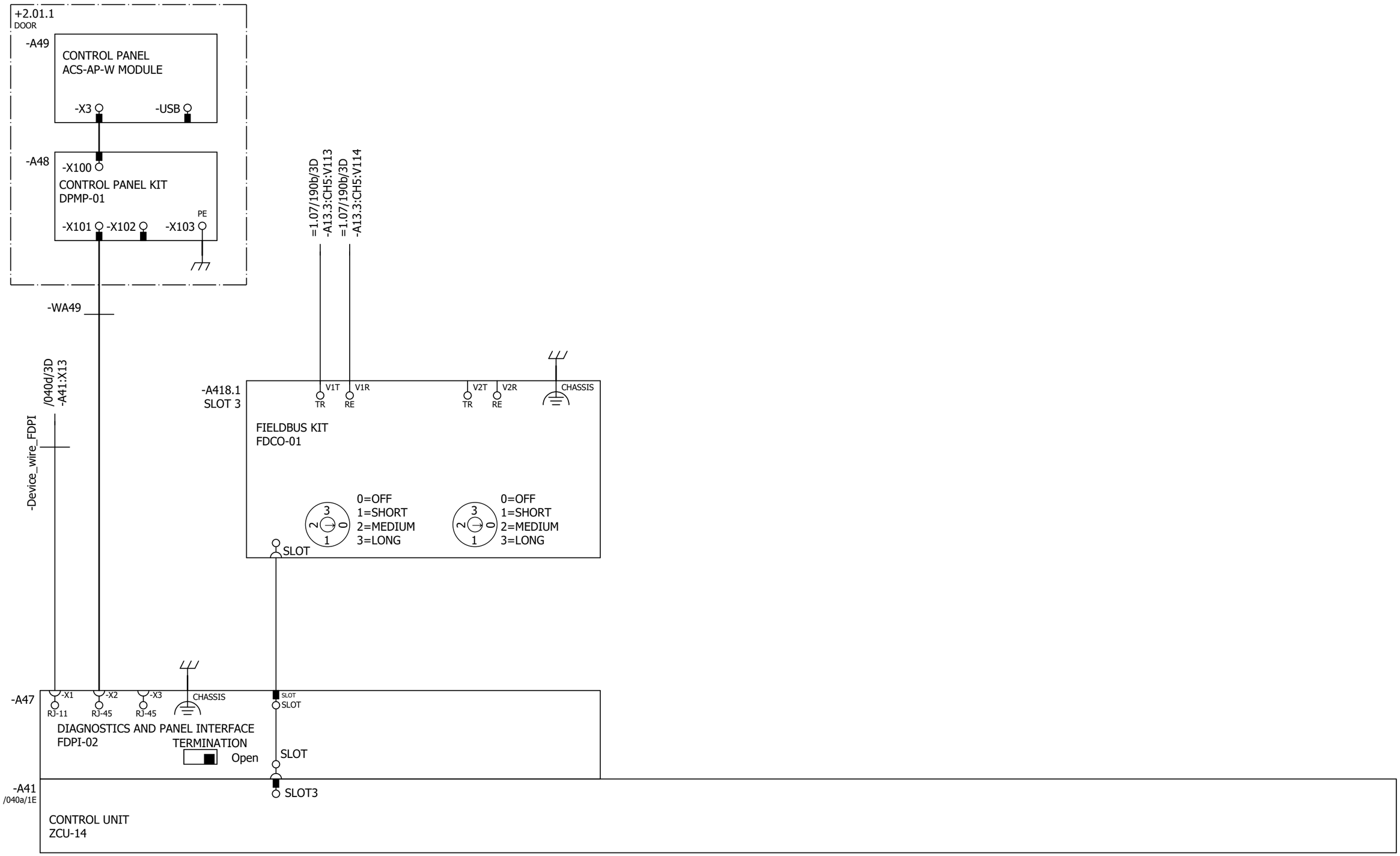

P345812 / 29711

Cust. Doc. No.	Prep. Sky-Xin Zhang 02.08.2023	Title OPTION CARDS	Circuit diagram EFS2
Cust. Ref. No.	App.	INV2.05	SAP Doc. No.
Customer WMMP	Project Zhaka Jack-up Lift System	ACS880-107-0078A-3	EPLAN Doc. No. 3ABDC230674 - 2.05
	Zhaka Jack-up Lift System-1	400V	ABB Ref. No.
			Resp. Dept.

Item Des.
= 2.05
+ 2.01.1

Rev. .1 Sheet 041b
Cont. 061a

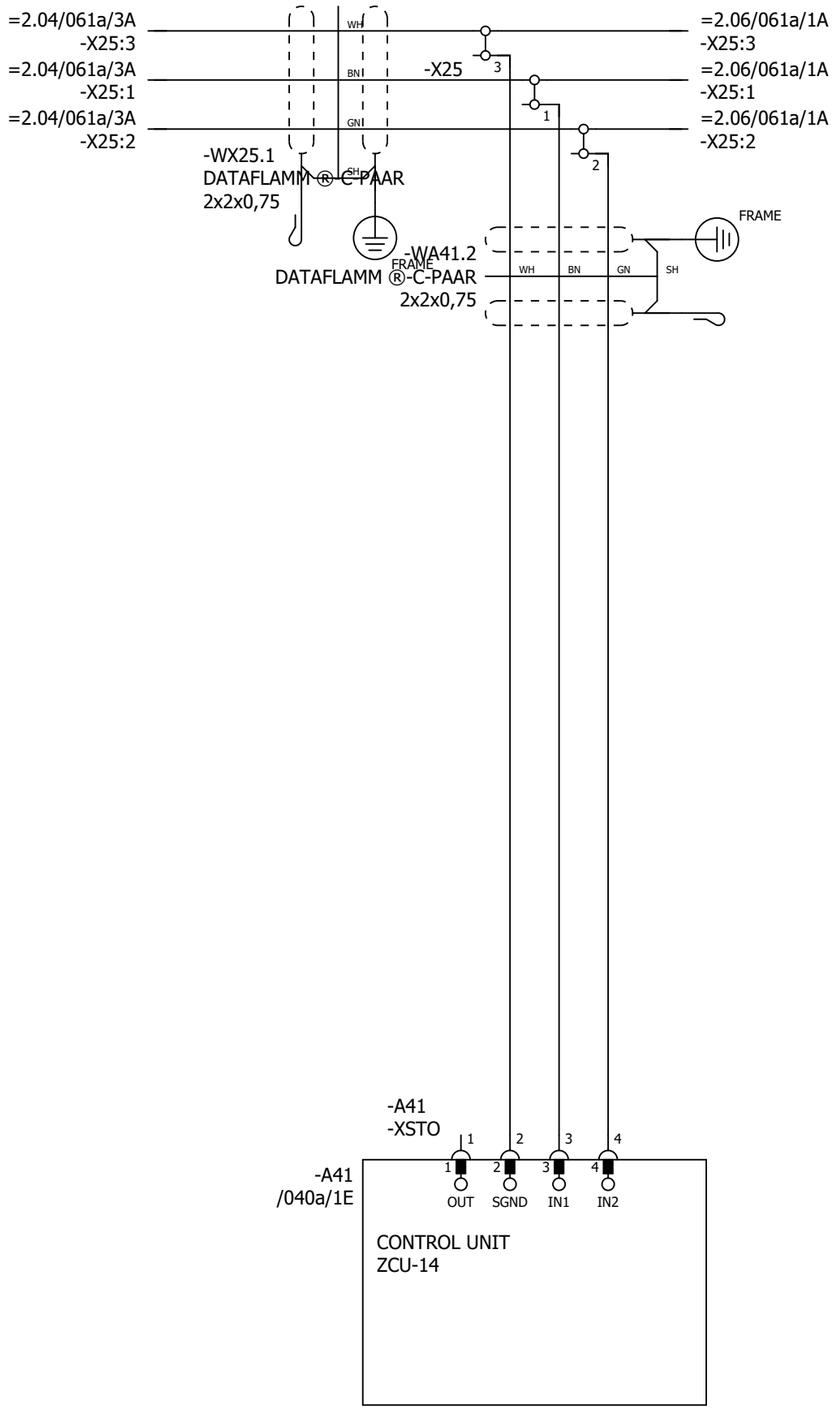

P345812 / 29711

SAFETY CIRCUIT
MACRO REVISION 6
RULES CONVERTED 19.7.2023

Cust. Doc. No.	Prep. Sky-Xin Zhang 02.08.2023	Title SAFETY CIRCUIT	Circuit diagram EFS2	Item Des.	
Cust. Ref. No.	App.	INV2.05	SAP Doc. No.	= 2.05	
Customer WMMP	Project Zhaka Jack-up Lift System	ACS880-107-0078A-3	EPLAN Doc. No. 3ABDC230674 - 2.05	+ 2.01.1	
	Zhaka Jack-up Lift System-1	400V	ABB Ref. No.	Rev. .1	Sheet 061a
			Resp. Dept.	Cont.	&MPC/Part list_1

Part list: 3ABDC230674DU02017

Item	Sort String	Qty.Str	Unit	Component Number	Description and text	Technical data
0010		1.000	ST		ACS880-107-0078A-3+A012+B053+C121+C132+	
0020		1.000	ST		_C206+E210+F272+F287+F288+G300+G307+G315	
0030		1.000	ST		_+G320+G330+G344+H352+H367+K450+K492+L50	
0040		1.000	ST		_3+P913+Q964	
0050		1.000	ST		=2.05	
0060		1.000	ST		+2.01.1,INU3	
0070		1.000	ST		Powerconversionequipment	
0080	-A41_MEM	1.000	PC	3AXD50000006010	MEMORY UNIT KIT ZMU-02	
0090	-T11	1.000	PC	3AUA0000120009-M	ACS880-104-0078A-3+P922	+P922
0100	SCREW	1.000	PC	3AFE68681481	SCREW K30X10 TORX	PT WN1452 ZN
0110	SOFTWARE	1.000	PC	3AUA0000153462	SOFTWARE PRIMARY CONTROL PROGRA	AINF6 FOR ZCU-12/14
0120		1.000	ST		R4imoduleDCfuse	
0130	-F11.1-2	2.000	PC	3AXD50000000219	FUSE FR27UQ69V160T/160A	6.921 CP URQ 27X60MM FERRULE;AR
0140		1.000	ST		R3i-R4imoduleDCfusebase	
0150	(-F11.1-2)	2.000	PC	3AUA0000089227	FUSE HOLDER FUSE BASE US271MI 150A	FUSE BASE US271MI 150A 800V
0160		1.000	ST		24VDCsupplyZCU	
0170	-WA41_1	1.000	PC	3AXD50000005218	WIRE HARNESS 24VDC SUPPLY X51 ZCU V	HALOGEN FREE;X51_A51
0180		1.000	ST		Rooffancontrol	
0190	-WA41_3	1.000	PC	3AXD50000002688	WIRE HARNESS FAN CONTROL MAIN WIRE	HALOGEN FREE;X208_X26.3
0200		1.000	ST		Bottomrowmodulewireharness	
0210	-WT11	1.000	PC	3AXD50000002418	WIRE HARNESS R4I FUSE_MODULE BR V2	HALOGEN FREE;MAIN CIRCUIT WIRE SET
0220		1.000	ST		Optionmodule	
0230	-A418.1	1.000	PC	3AUA0000107392	COMMUNIC. ADAPTER FDCO-01	
0240		1.000	ST		Controlpanel	
0250	-A47	1.000	PC	3AUA0000108650	FIELDBUS KIT FDPI-02	PANEL BUS ADAPTER
0260		1.000	ST		DCfusesupervision	
0270	-K11.1-2	2.000	PC	3AXD50000021313	RELAY DEK_REL_G24/21	250 V;6 A;COIL 24VDC
0280		1.000	ST		FieldBus	
0290	-A438.1	1.000	PC	3AXD50000192779	OPTION MODULE FPNO-21	PROFINET IO
0300		1.000	ST		Supplementtorelay	
0310	(-K11.1)	1.000	PC	3AXD50000021312	TERMINAL BLOCK ST EB2_DIK_RD 2716693	2POLE, 6,15 MM PITCH;FOR DEK RELAYS

P345812 / 29711

Cust. Doc. No.	Prep.	Title PART LIST INV2.05 ACS880-107-0078A-3 400V	Item Des. = 2.05 +
Cust. Ref. No.	App.	SAP Doc. No.	
Customer WMMP	Project Zhaka Jack-up Lift System Zhaka Jack-up Lift System-1	EPLAN Doc. No. 3ABDC230674 - 2.05	
		ABB Ref. No.	Rev. / Sheet Part list_1
		Resp. Dept.	Cont. &EMA/1

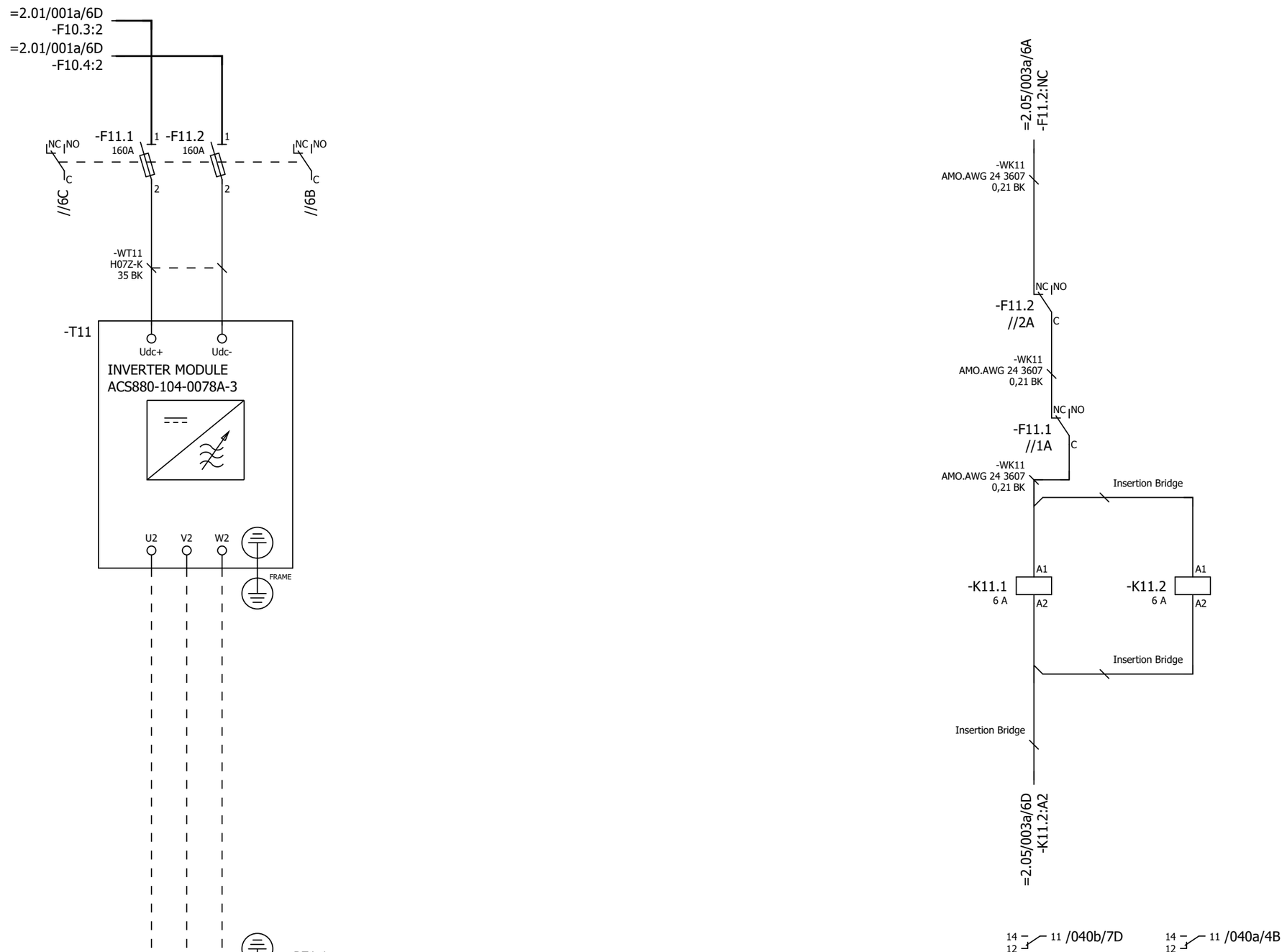

P345812 / 29711

Cust. Doc. No.	Prep. Sky-Xin Zhang 02.08.2023	Title MAIN CIRCUIT	Circuit diagram EFS2
Cust. Ref. No.	App.	INV2.06	SAP Doc. No.
Customer WMMP	Project Zhaka Jack-up Lift System	ACS880-107-0078A-3	EPLAN Doc. No. 3ABDC230674 - 2.06
	Zhaka Jack-up Lift System-1	400V	ABB Ref. No.
			Resp. Dept.

Item Des.
= 2.06
+ 2.01.1

Rev. .1 Sheet 003a
Cont. 040a

Control and status signals	Terminal	Pin
E-STOP FEEDBACK 1 - ESTOP ACTIVE	-XRO1	12
RUNNING 1 - RUNNING	-XRO2	22
FAULT (-1) 1 - NO FAULT	-XRO3	32

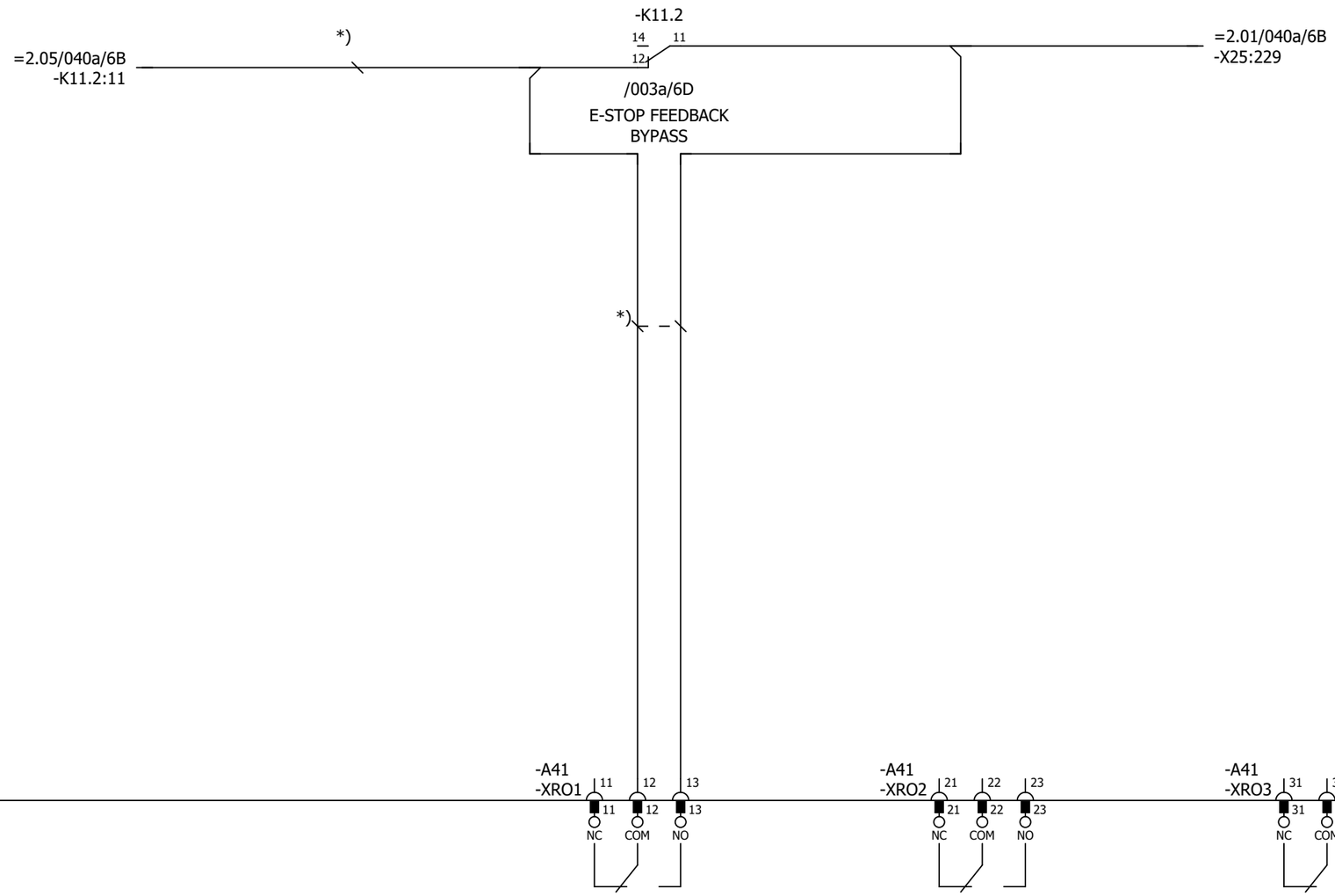

P345812 / 29711

Cust. Doc. No.	Prep. Sky-Xin Zhang 02.08.2023	Title CONTROL BOARD INV2.06 ACS880-107-0078A-3 400V	Circuit diagram EFS2
Cust. Ref. No.	App.		SAP Doc. No.
Customer WMMP	Project Zhaka Jack-up Lift System Zhaka Jack-up Lift System-1		EPLAN Doc. No. 3ABDC230674 - 2.06
			ABB Ref. No.
			Resp. Dept.

Item Des.
= 2.06
+ 2.01.1

Rev. .1 Sheet 040a
Cont. 040b

Control and status signals	Terminal	Pin
DIGITAL INTERLOCK	-XD24	1
START/STOP 1 - START	-XDI	1
FORWARD/REVERSE 1 - REVERSE	-XDI	2
RESET	-XDI	3
EMERGENCY STOP 0 - ACTIVE	-XDI	4
NOT SPECIFIED	-XDI	5
DI6 NOT IN USE	-XDI	6
OUTPUT: READY	-XDIO	1
OUTPUT: RUNNING	-XDIO	2

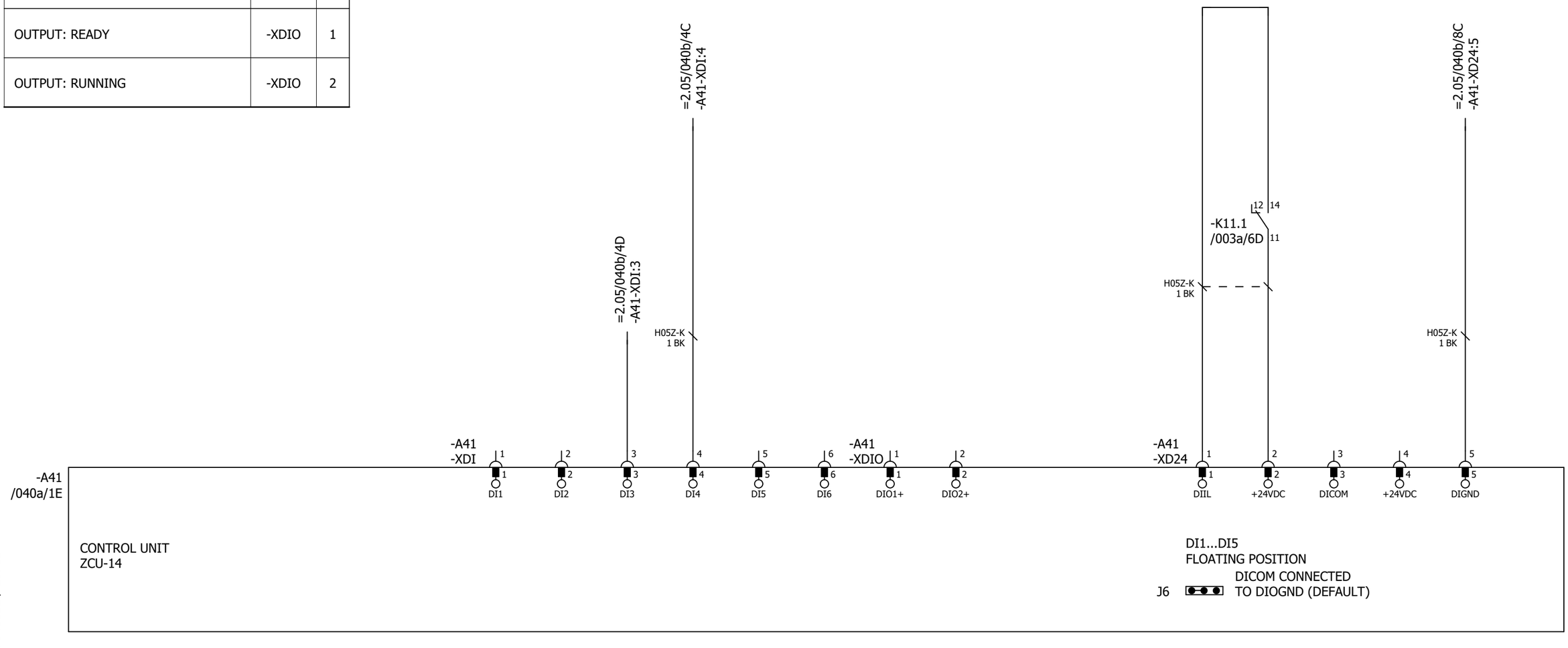

Cust. Doc. No.	Prep. Sky-Xin Zhang 02.08.2023	Title CONTROL BOARD INV2.06 ACS880-107-0078A-3 400V	Circuit diagram EFS2
Cust. Ref. No.	App.		SAP Doc. No.
Customer WMMP	Project Zhaka Jack-up Lift System Zhaka Jack-up Lift System-1		EPLAN Doc. No. 3ABDC230674 - 2.06
			ABB Ref. No.
			Resp. Dept.

Item Des.
= 2.06
+ 2.01.1

Rev. .1 Sheet 040b
Cont. 040c

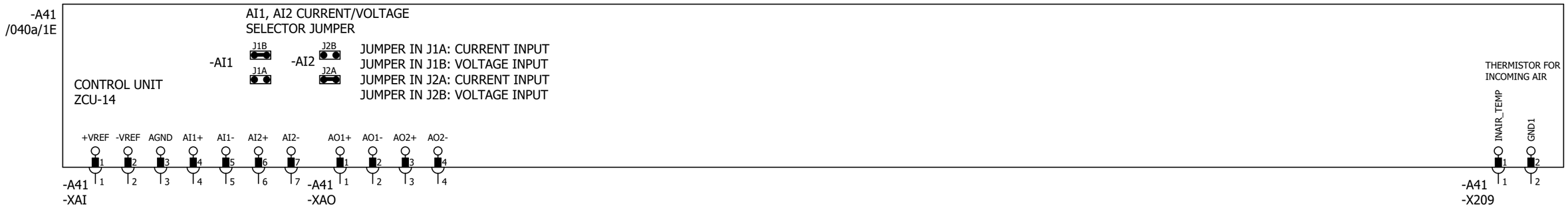

Control and status signals	Terminal	Pin
MOTOR TEMP. MONITORING 0(2)…10V	-XAI	4
AI2 NOT SPECIFIED BY DEFAULT NOT IN USE 0(4)…20mA	-XAI	6
CURR SOU MOT TEMP MONIT 0(4)...20mA	-XAO	1
CURRENT 0(4)…20mA ↔ 0(4)…MOTOR CURRENT	-XAO	3

P345812 / 29711

Cust. Doc. No.	Prep. Sky-Xin Zhang 02.08.2023	Title CONTROL BOARD INV2.06 ACS880-107-0078A-3 400V	Circuit diagram EFS2
Cust. Ref. No.	App.		SAP Doc. No.
Customer WMMP	Project Zhaka Jack-up Lift System Zhaka Jack-up Lift System-1		EPLAN Doc. No. 3ABDC230674 - 2.06
			ABB Ref. No.
			Resp. Dept.

Item Des.
= 2.06
+ 2.01.1

Rev. .1 Sheet 040c
Cont. 040d

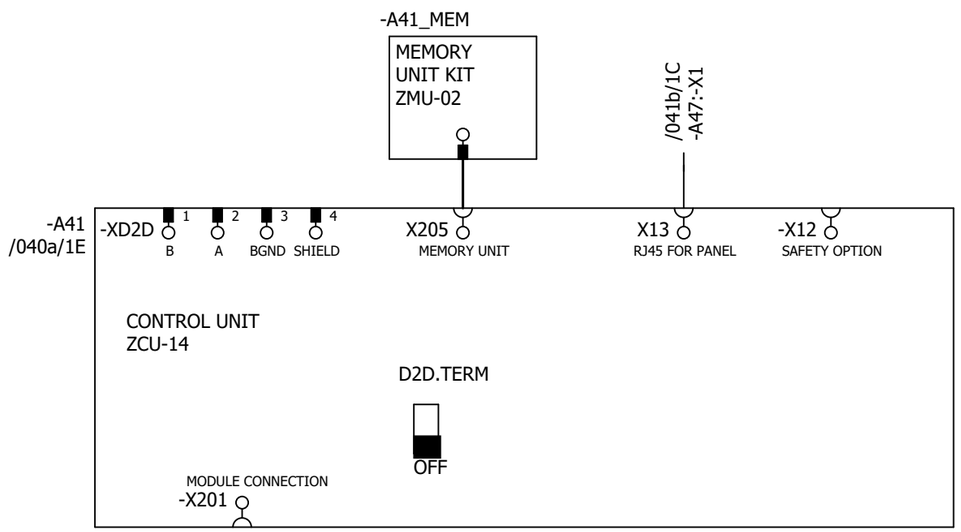

P345812 / 29711

Cust. Doc. No.	Prep. Sky-Xin Zhang 02.08.2023	Title CONTROL BOARD INV2.06 ACS880-107-0078A-3 400V	Circuit diagram EFS2
Cust. Ref. No.	App.		SAP Doc. No.
Customer WMMP	Project Zhaka Jack-up Lift System Zhaka Jack-up Lift System-1		EPLAN Doc. No. 3ABDC230674 - 2.06
			ABB Ref. No.
			Resp. Dept.

Item Des.	= 2.06 + 2.01.1
Rev. .1	Sheet 040d
Cont.	041a

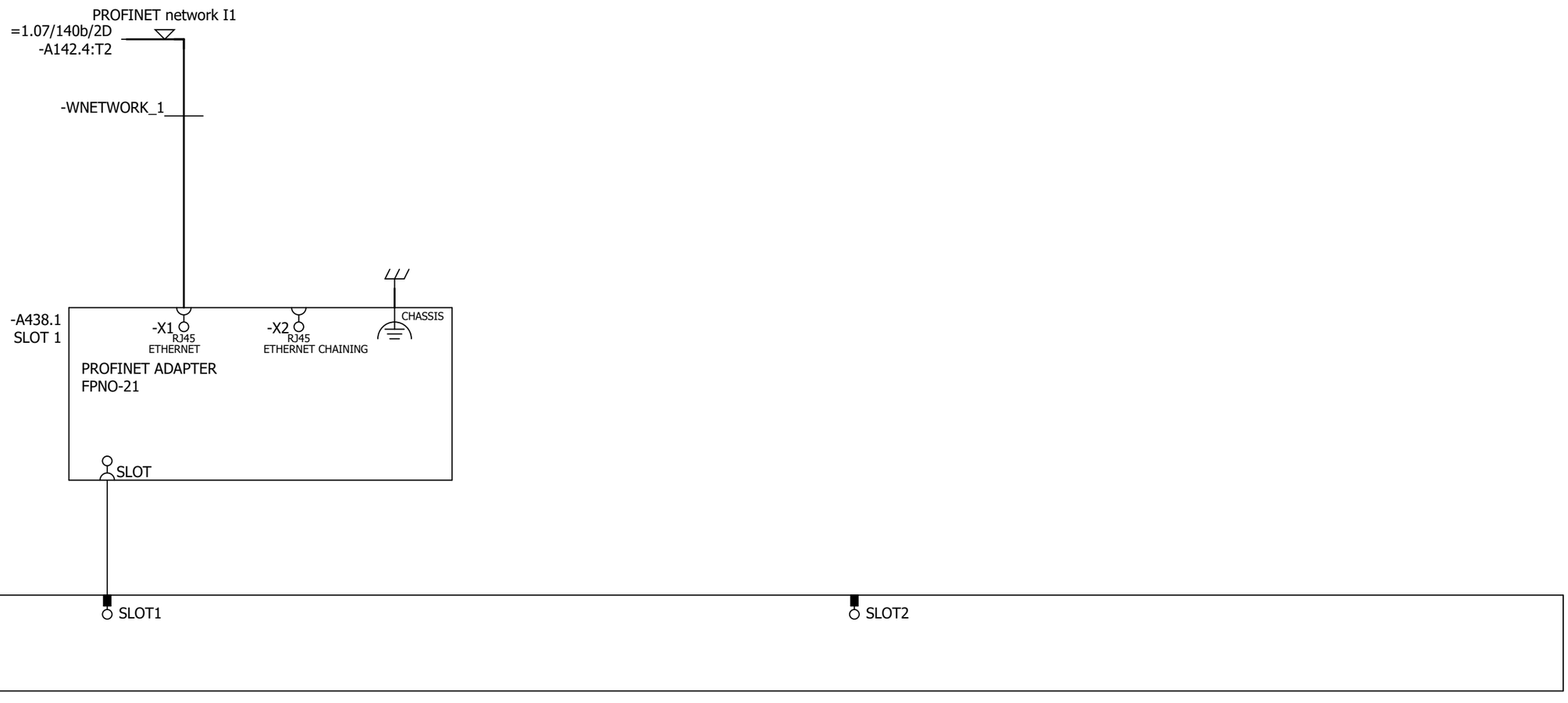

Cust. Doc. No.	Prep. Sky-Xin Zhang 02.08.2023	Title OPTION CARDS INV2.06 ACS880-107-0078A-3 400V	Circuit diagram EFS2
Cust. Ref. No.	App.		SAP Doc. No.
Customer WMMP	Project Zhaka Jack-up Lift System Zhaka Jack-up Lift System-1		EPLAN Doc. No. 3ABDC230674 - 2.06
			ABB Ref. No.
			Resp. Dept.

Item Des.
= 2.06
+ 2.01.1

Rev. .1 Sheet 041a
Cont. 041b

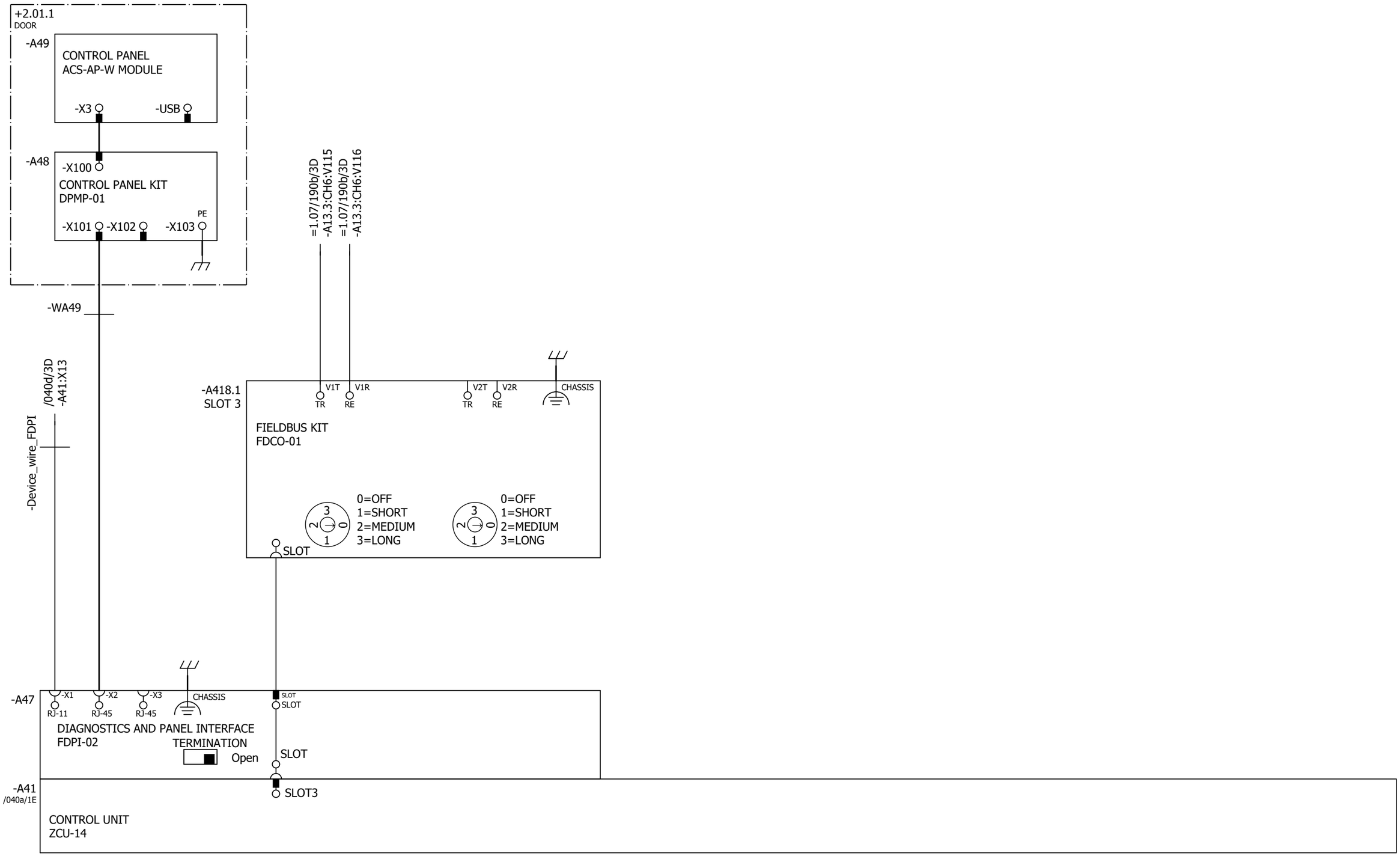

Cust. Doc. No.	Prep. Sky-Xin Zhang 02.08.2023	Title OPTION CARDS	Circuit diagram EFS2	Item Des.
Cust. Ref. No.	App.	INV2.06	SAP Doc. No.	= 2.06
Customer WMMP	Project Zhaka Jack-up Lift System	ACS880-107-0078A-3	EPLAN Doc. No. 3ABDC230674 - 2.06	+ 2.01.1
	Zhaka Jack-up Lift System-1	400V	ABB Ref. No.	Rev. .1 Sheet 041b
			Resp. Dept.	Cont. 061a

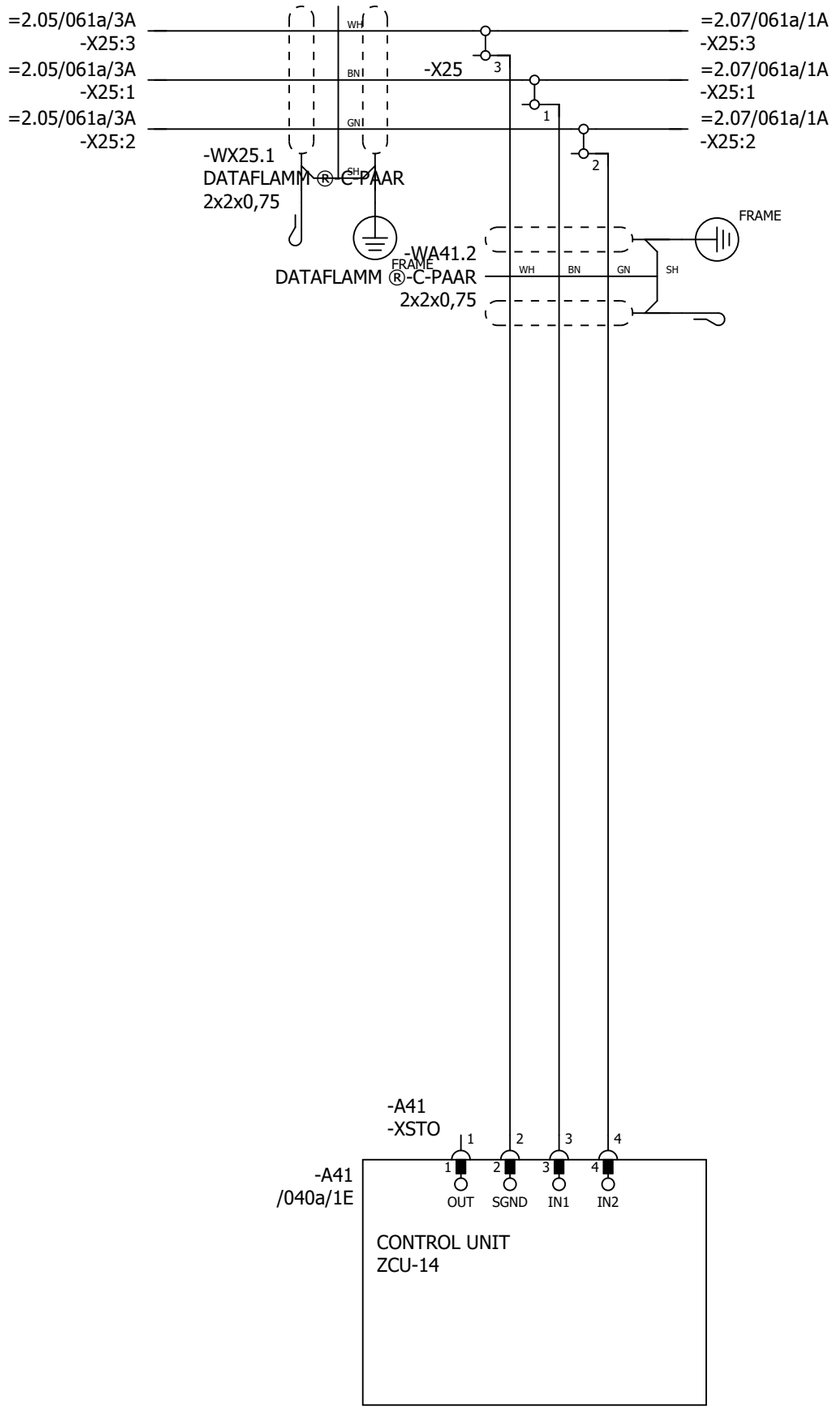

P345812 / 29711

SAFETY CIRCUIT
MACRO REVISION 6
RULES CONVERTED 19.7.2023

Cust. Doc. No.	Prep. Sky-Xin Zhang 02.08.2023	Title SAFETY CIRCUIT	Circuit diagram EFS2	Item Des.
Cust. Ref. No.	App.	INV2.06	SAP Doc. No.	= 2.06
Customer WMMP	Project Zhaka Jack-up Lift System	ACS880-107-0078A-3	EPLAN Doc. No. 3ABDC230674 - 2.06	+ 2.01.1
	Zhaka Jack-up Lift System-1	400V	ABB Ref. No.	Rev. .1 Sheet 061a
			Resp. Dept.	Cont. &MPC/Part list_1

Part list: 3ABDC230674DU02018

Item	Sort String	Qty.Str	Unit	Component Number	Description and text	Technical data
0010		1.000	ST		ACS880-107-0078A-3+A012+B053+C121+C132+	
0020		1.000	ST		_C206+E210+F272+F287+F288+G300+G307+G315	
0030		1.000	ST		_+G320+G330+G344+H352+H367+K450+K492+L50	
0040		1.000	ST		_3+P913+Q964	
0050		1.000	ST		=2.06	
0060		1.000	ST		+2.01.1,INU3	
0070		1.000	ST		Powerconversionequipment	
0080	-A41_MEM	1.000	PC	3AXD50000006010	MEMORY UNIT KIT ZMU-02	
0090	-T11	1.000	PC	3AUA0000120009-M	ACS880-104-0078A-3+P922	+P922
0100	SCREW	1.000	PC	3AFE68681481	SCREW K30X10 TORX	PT WN1452 ZN
0110	SOFTWARE	1.000	PC	3AUA0000153462	SOFTWARE PRIMARY CONTROL PROGRA	AINF6 FOR ZCU-12/14
0120		1.000	ST		R4imoduleDCfuse	
0130	-F11.1-2	2.000	PC	3AXD50000000219	FUSE FR27UQ69V160T/160A	6.921 CP URQ 27X60MM FERRULE;AR
0140		1.000	ST		R3i-R4imoduleDCfusebase	
0150	(-F11.1-2)	2.000	PC	3AUA0000089227	FUSE HOLDER FUSE BASE US271MI 150A	FUSE BASE US271MI 150A 800V
0160		1.000	ST		24VDCsupplyZCU	
0170	-WA41_1	1.000	PC	3AXD50000005218	WIRE HARNESS 24VDC SUPPLY X51 ZCU V	HALOGEN FREE;X51_A51
0180		1.000	ST		Rooffancontrol	
0190	-WA41_3	1.000	PC	3AXD50000002688	WIRE HARNESS FAN CONTROL MAIN WIRE	HALOGEN FREE;X208_X26.3
0200		1.000	ST		Bottomrowmodulewireharness	
0210	-WT11	1.000	PC	3AXD50000002418	WIRE HARNESS R4I FUSE_MODULE BR V2	HALOGEN FREE;MAIN CIRCUIT WIRE SET
0220		1.000	ST		Optionmodule	
0230	-A418.1	1.000	PC	3AUA0000107392	COMMUNIC. ADAPTER FDCO-01	
0240		1.000	ST		Controlpanel	
0250	-A47	1.000	PC	3AUA0000108650	FIELDBUS KIT FDPI-02	PANEL BUS ADAPTER
0260		1.000	ST		DCfusesupervision	
0270	-K11.1-2	2.000	PC	3AXD50000021313	RELAY DEK_REL_G24/21	250 V;6 A;COIL 24VDC
0280		1.000	ST		FieldBus	
0290	-A438.1	1.000	PC	3AXD50000192779	OPTION MODULE FPNO-21	PROFINET IO
0300		1.000	ST		Supplementtorelay	
0310	(-K11.1)	1.000	PC	3AXD50000021312	TERMINAL BLOCK ST EB2_DIK_RD 2716693	2POLE, 6,15 MM PITCH;FOR DEK RELAYS

P345812 / 29711

Cust. Doc. No.	Prep.	Title PART LIST INV2.06 ACS880-107-0078A-3 400V	Item Des. = 2.06 +
Cust. Ref. No.	App.		SAP Doc. No.
Customer WMMP	Project Zhaka Jack-up Lift System Zhaka Jack-up Lift System-1		EPLAN Doc. No. 3ABDC230674 - 2.06
			ABB Ref. No. / Rev. / Sheet Part list_1
			Resp. Dept. / Cont. &EMA/1

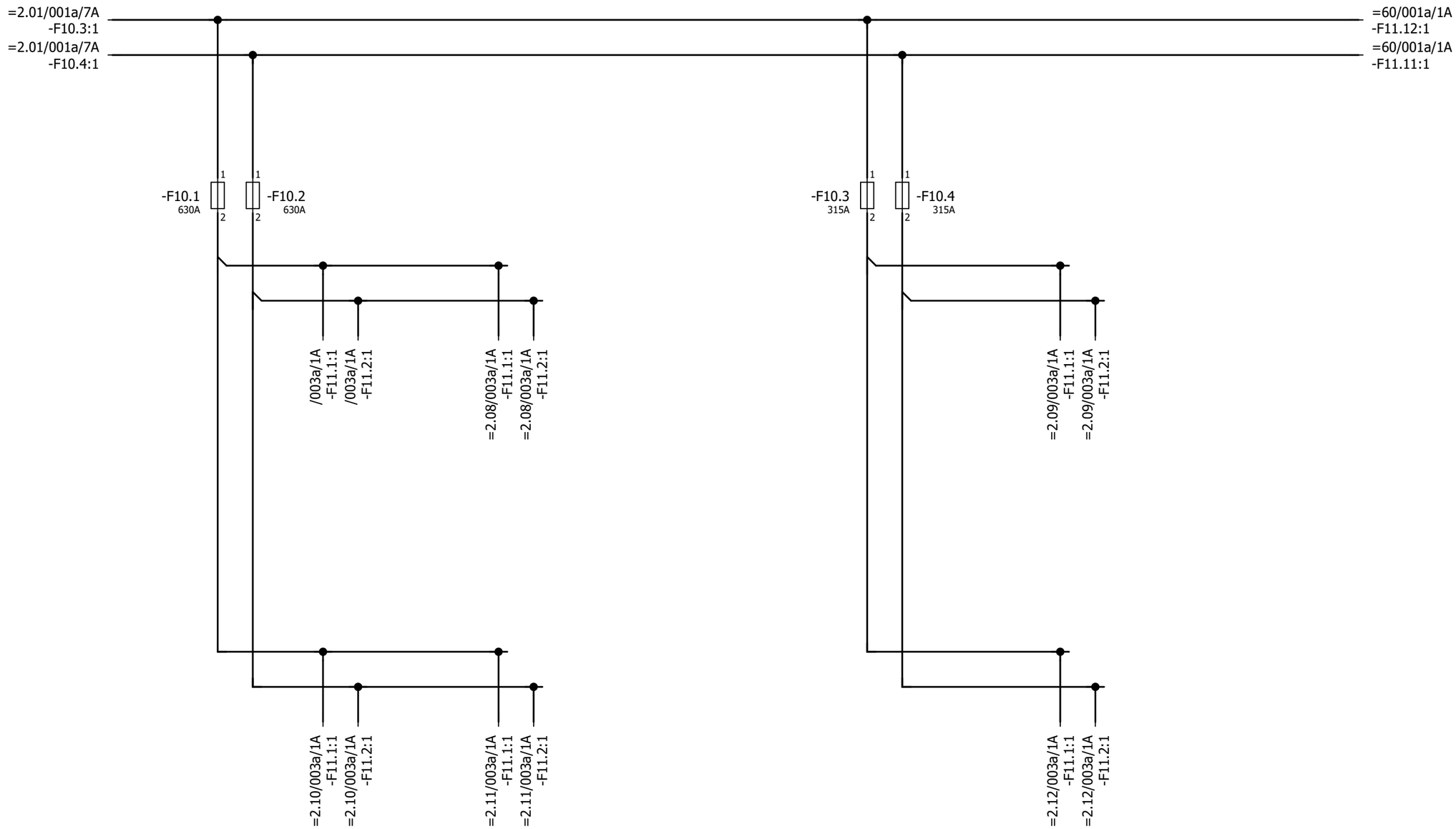

P345812 / 29711

Cust. Doc. No.	Prep. Sky-Xin Zhang 02.08.2023	Title MAIN CIRCUIT INV2.07 ACS880-107-0078A-3 400V	Circuit diagram EFS2
Cust. Ref. No.	App.		SAP Doc. No.
Customer WMMP	Project Zhaka Jack-up Lift System Zhaka Jack-up Lift System-1		EPLAN Doc. No. 3ABDC230674 - 2.07
			ABB Ref. No.
			Resp. Dept.

Item Des.
= 2.07
+ 2.07.1

Rev. .1 Sheet 001a
Cont. 003a

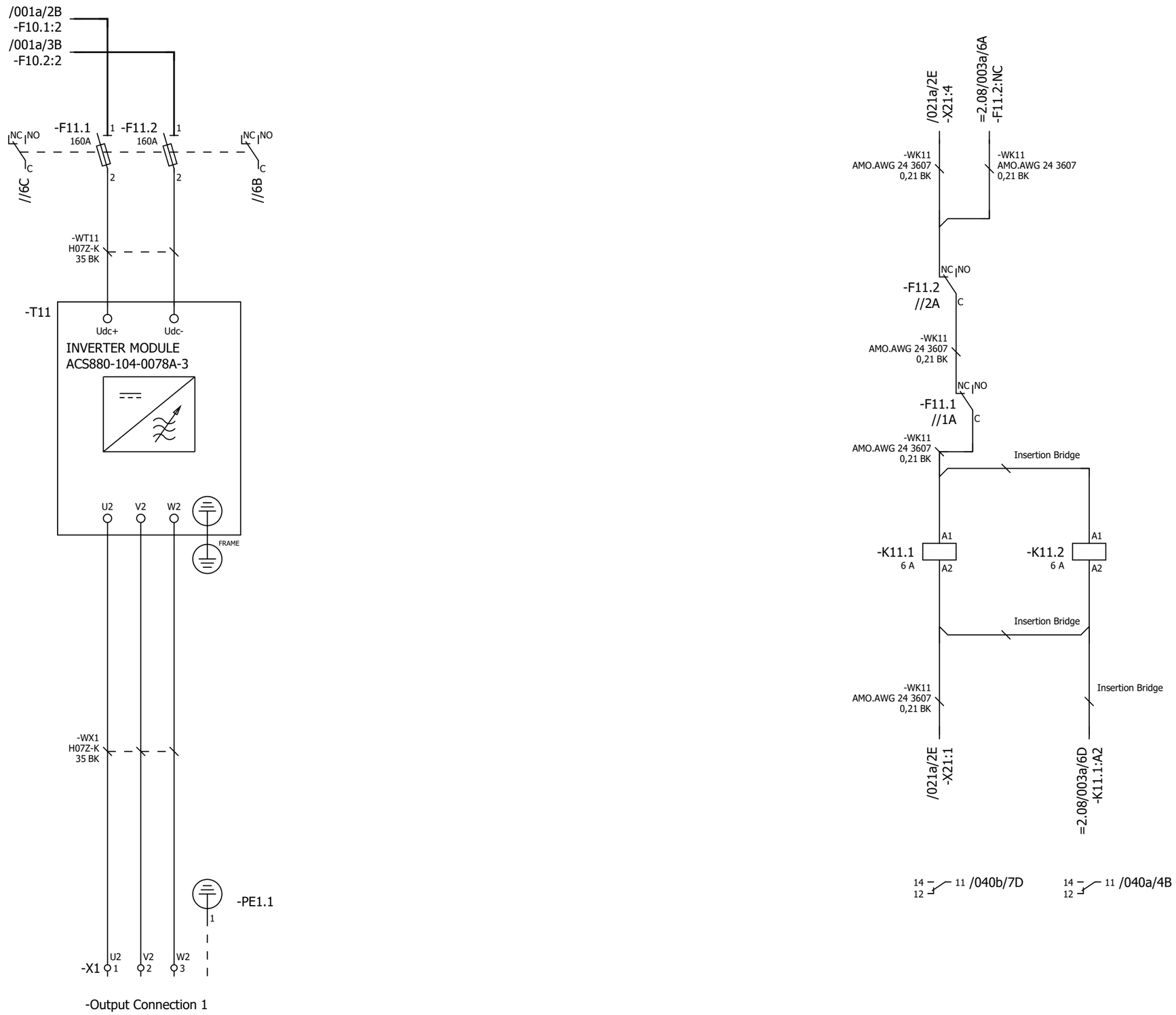

P345812 / 29711

Cust. Doc. No.	Prep. Sky-Xin Zhang 02.08.2023	Title MAIN CIRCUIT	Circuit diagram EFS2
Cust. Ref. No.	App.	INV2.07	SAP Doc. No.
Customer WMMP	Project Zhaka Jack-up Lift System	ACS880-107-0078A-3	EPLAN Doc. No. 3ABDC230674 - 2.07
	Zhaka Jack-up Lift System-1	400V	ABB Ref. No.
			Resp. Dept.

Item Des.
= 2.07
+ 2.07.1

Rev. .1 Sheet 003a
Cont. 020a

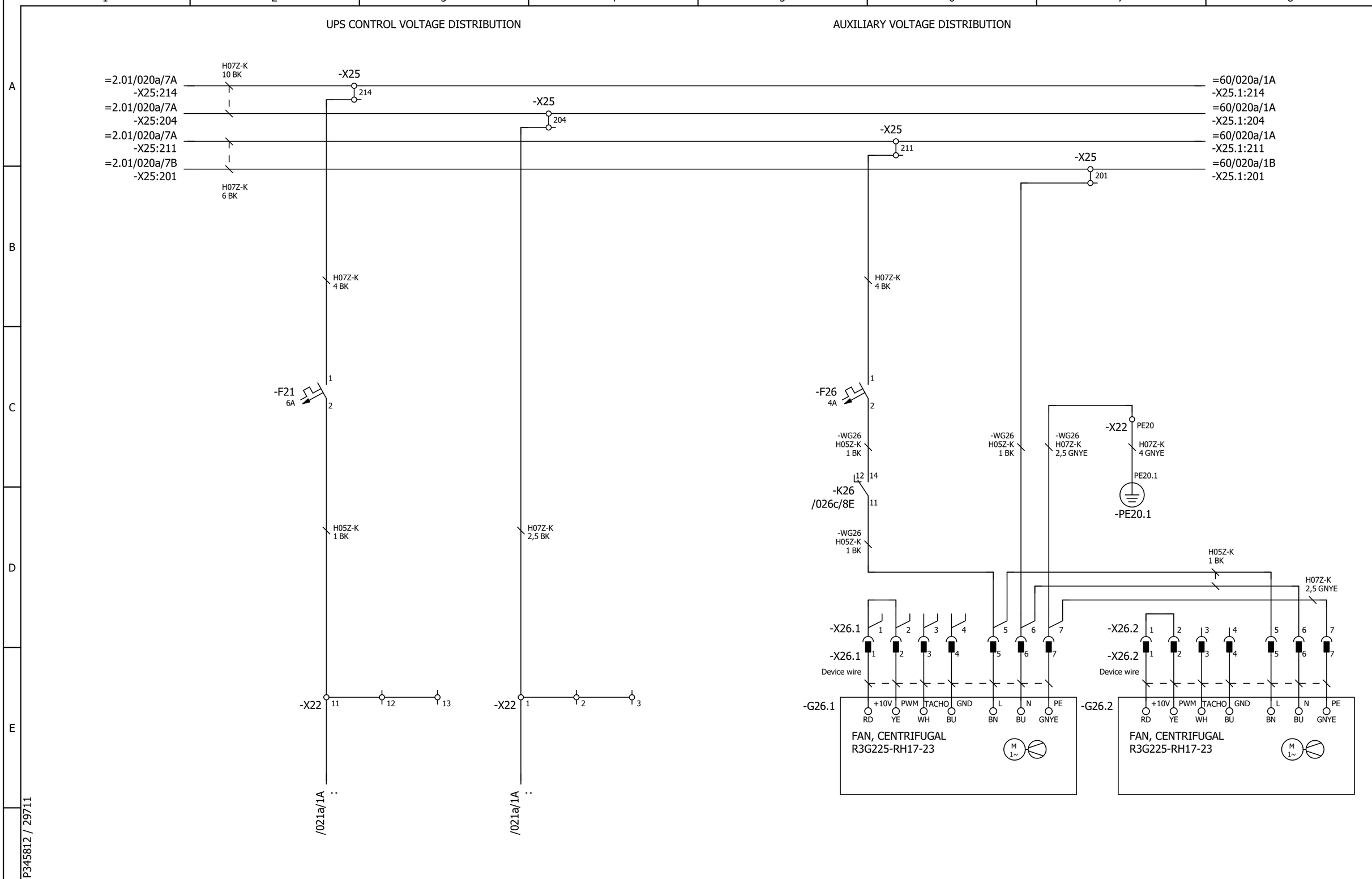

P345812 / 29711

Cust. Doc. No.	Prep. Sky-Xin Zhang 02.08.2023	Title AUXILIARY VOLTAGE DISTRIBUTION	Circuit diagram EFS2	Item Des.	
Cust. Ref. No.	App.	INV2.07	SAP Doc. No.	= 2.07	
Customer WMMP	Project Zhaka Jack-up Lift System	ACS880-107-0078A-3	EPLAN Doc. No. 3ABDC230674 - 2.07	+ 2.07.1	
	Zhaka Jack-up Lift System-1	400V	ABB Ref. No.	Rev. .1	Sheet 020a
			Resp. Dept.	Cont.	021a

24V CONTROL VOLTAGE DISTRIBUTION

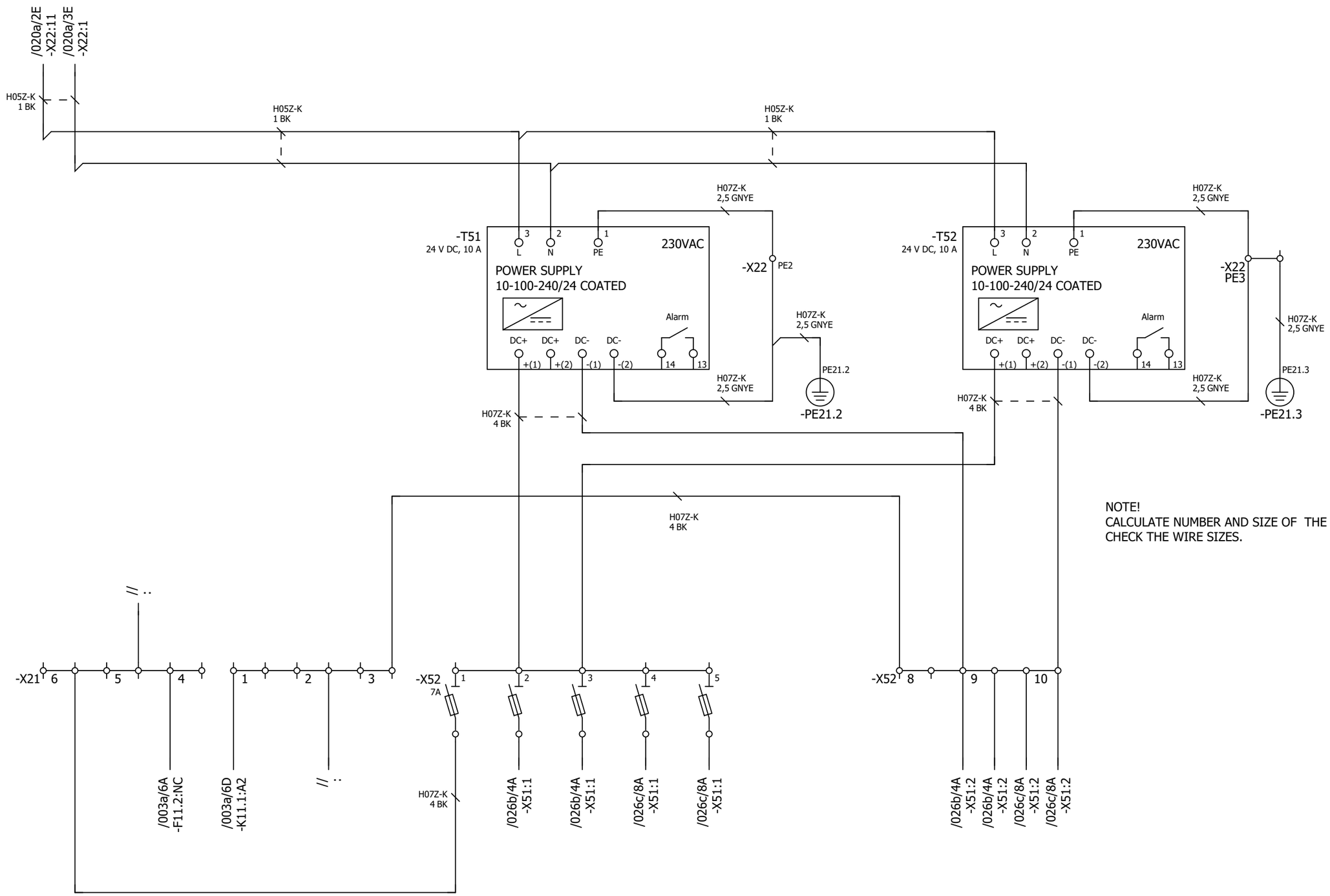

NOTE!
CALCULATE NUMBER AND SIZE OF THE POWER.
CHECK THE WIRE SIZES.

P345812 / 29711

Cust. Doc. No.	Prep. Sky-Xin Zhang 02.08.2023	Title AUXILIARY VOLTAGE DISTRIBUTION	Circuit diagram EFS2	Item Des.	
Cust. Ref. No.	App.	INV2.07	SAP Doc. No.	= 2.07	
Customer WMMP	Project Zhaka Jack-up Lift System	ACS880-107-0078A-3	EPLAN Doc. No. 3ABDC230674 - 2.07	+ 2.07.1	
	Zhaka Jack-up Lift System-1	400V	ABB Ref. No.	Rev. .1	Sheet 021a
			Resp. Dept.	Cont.	026a

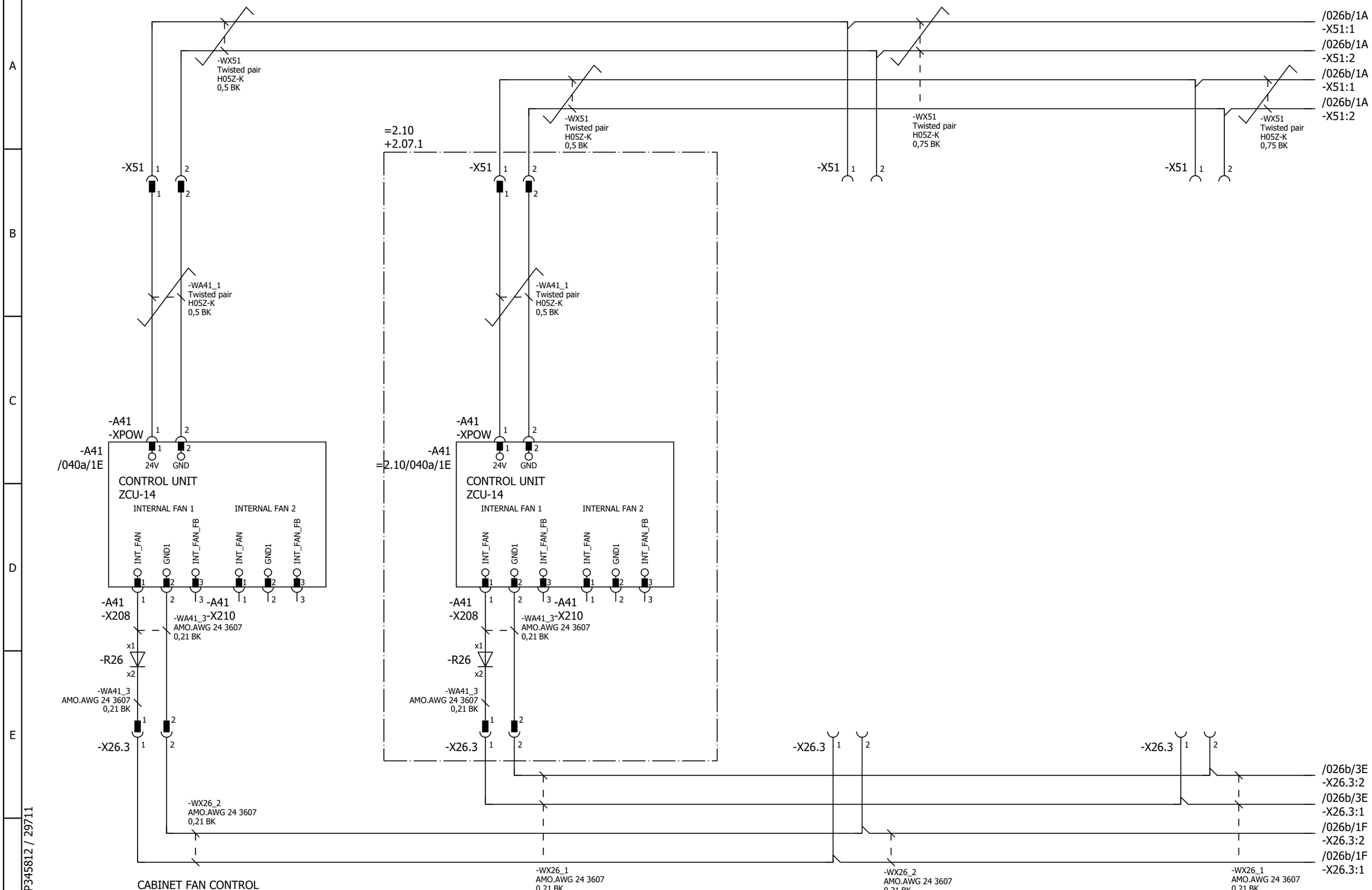

Cust. Doc. No.	Prep. Sky-Xin Zhang 02.08.2023	Title CABINET FAN CONTROL ZCU UPS, 24V FSO, FEA	Circuit diagram EFS2
Cust. Ref. No.	App.	INV2.07	SAP Doc. No.
Customer WMMP	Project Zhaka Jack-up Lift System	ACS880-107-0078A-3	EPLAN Doc. No. 3ABDC230674 - 2.07
	Zhaka Jack-up Lift System-1	400V	ABB Ref. No.
			Resp. Dept.

Item Des. = 2.07 + 2.07.1

Rev. .1 Sheet 026a

Cont. 026b

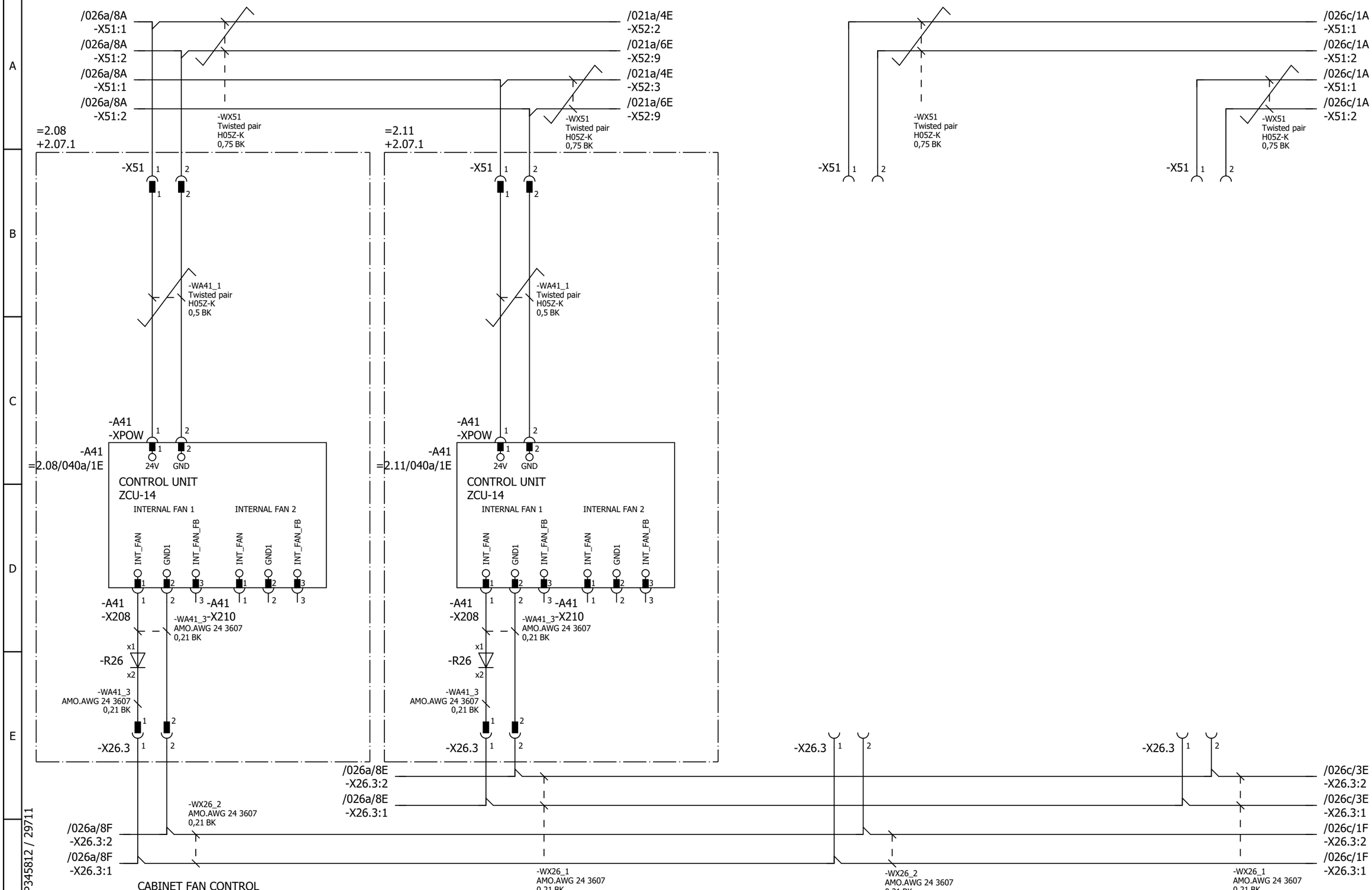

Cust. Doc. No.	Prep. Sky-Xin Zhang 02.08.2023	Title CABINET FAN CONTROL ZCU UPS, 24V FSO, FEA	Circuit diagram EFS2
Cust. Ref. No.	App.	INV2.07	SAP Doc. No.
Customer WMMP	Project Zhaka Jack-up Lift System	ACS880-107-0078A-3	EPLAN Doc. No. 3ABDC230674 - 2.07
	Zhaka Jack-up Lift System-1	400V	ABB Ref. No.
			Resp. Dept.

Item Des. = 2.07 + 2.07.1

Rev. .1 Sheet 026b

Cont. 026c

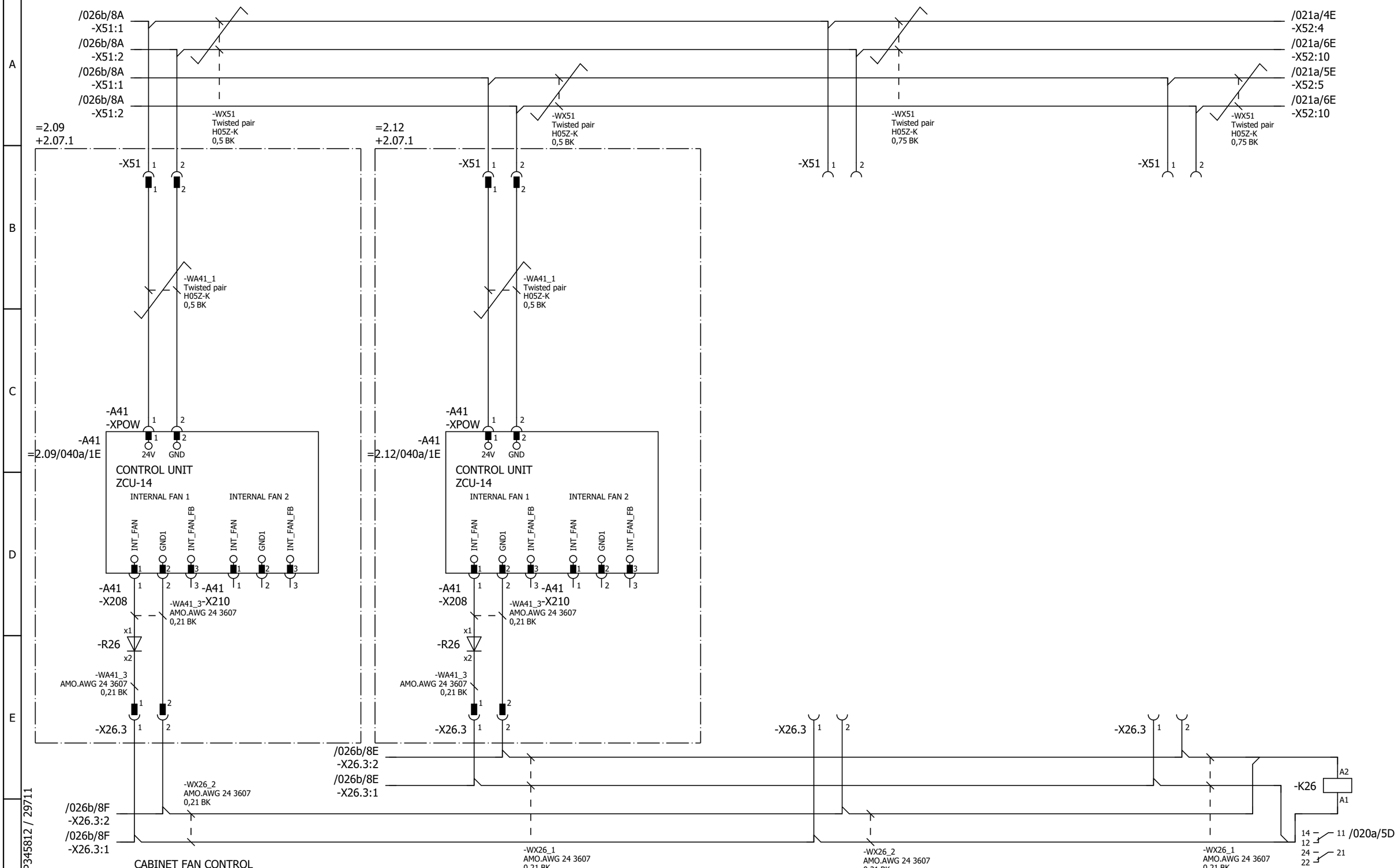

Cust. Doc. No.	Prep. Sky-Xin Zhang 02.08.2023	Title CABINET FAN CONTROL ZCU UPS, 24V FSO, FEA	Circuit diagram EFS2
Cust. Ref. No.	App.	INV2.07	SAP Doc. No.
Customer WMMP	Project Zhaka Jack-up Lift System	ACS880-107-0078A-3	EPLAN Doc. No. 3ABDC230674 - 2.07
	Zhaka Jack-up Lift System-1	400V	ABB Ref. No.
			Resp. Dept.

Item Des. = 2.07 + 2.07.1

Rev. .1 Sheet 026c

Cont. 040a

*) GEN.H05Z-K BK 1,0

Control and status signals	Terminal	Pin
E-STOP FEEDBACK 1 - ESTOP ACTIVE	-XRO1	12
RUNNING 1 - RUNNING	-XRO2	22
FAULT (-1) 1 - NO FAULT	-XRO3	32

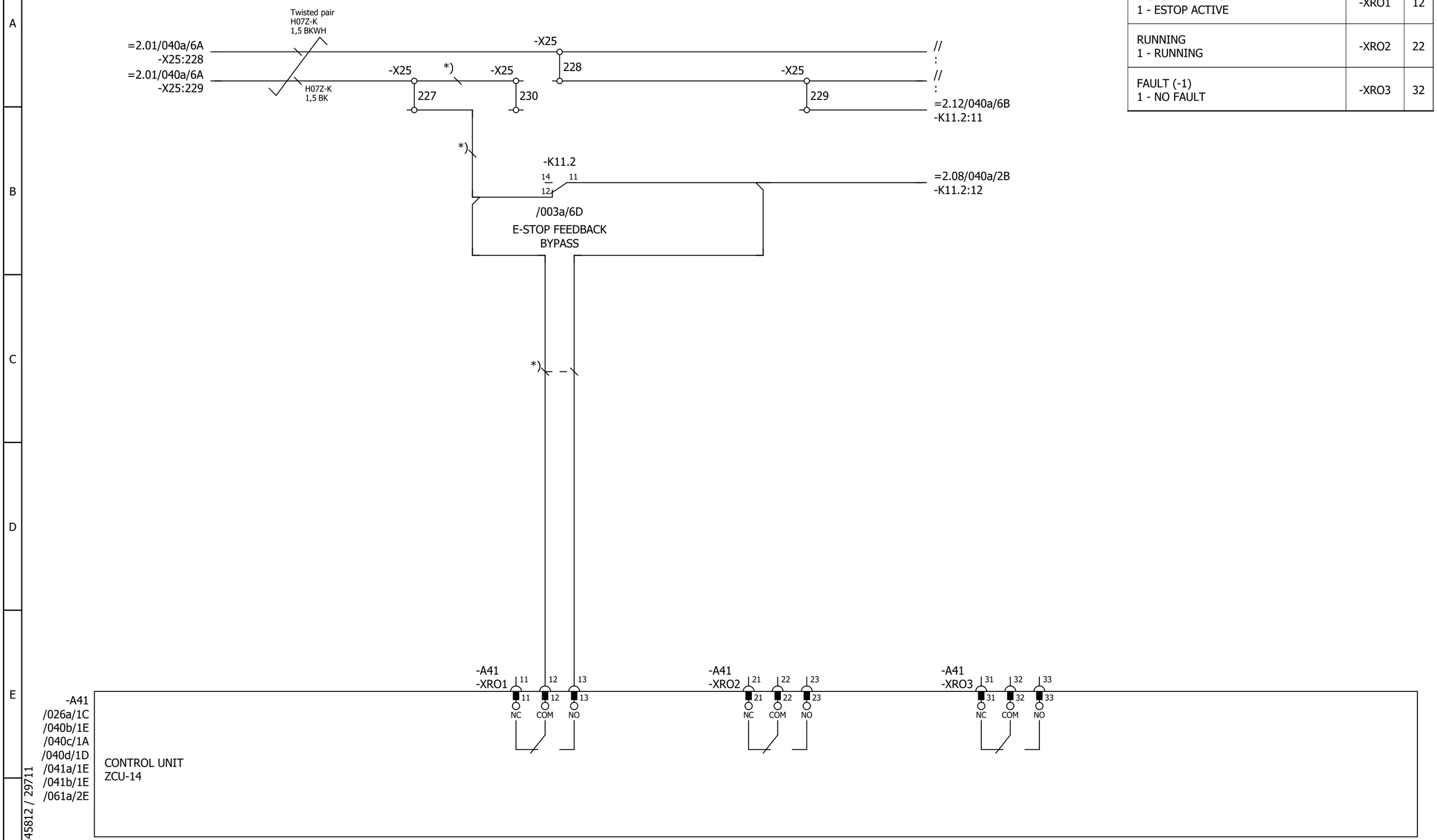

Cust. Doc. No.	Prep. Sky-Xin Zhang 02.08.2023	Title CONTROL BOARD INV2.07 ACS880-107-0078A-3 400V	Circuit diagram EFS2
Cust. Ref. No.	App.		SAP Doc. No.
Customer WMMP	Project Zhaka Jack-up Lift System Zhaka Jack-up Lift System-1		EPLAN Doc. No. 3ABDC230674 - 2.07
			ABB Ref. No.
			Resp. Dept.

Item Des.
= 2.07
+ 2.07.1

Rev. .1 Sheet 040a
Cont. 040b

Control and status signals	Terminal	Pin
DIGITAL INTERLOCK	-XD24	1
START/STOP 1 - START	-XDI	1
FORWARD/REVERSE 1 - REVERSE	-XDI	2
RESET	-XDI	3
EMERGENCY STOP 0 - ACTIVE	-XDI	4
NOT SPECIFIED	-XDI	5
DI6 NOT IN USE	-XDI	6
OUTPUT: READY	-XDIO	1
OUTPUT: RUNNING	-XDIO	2

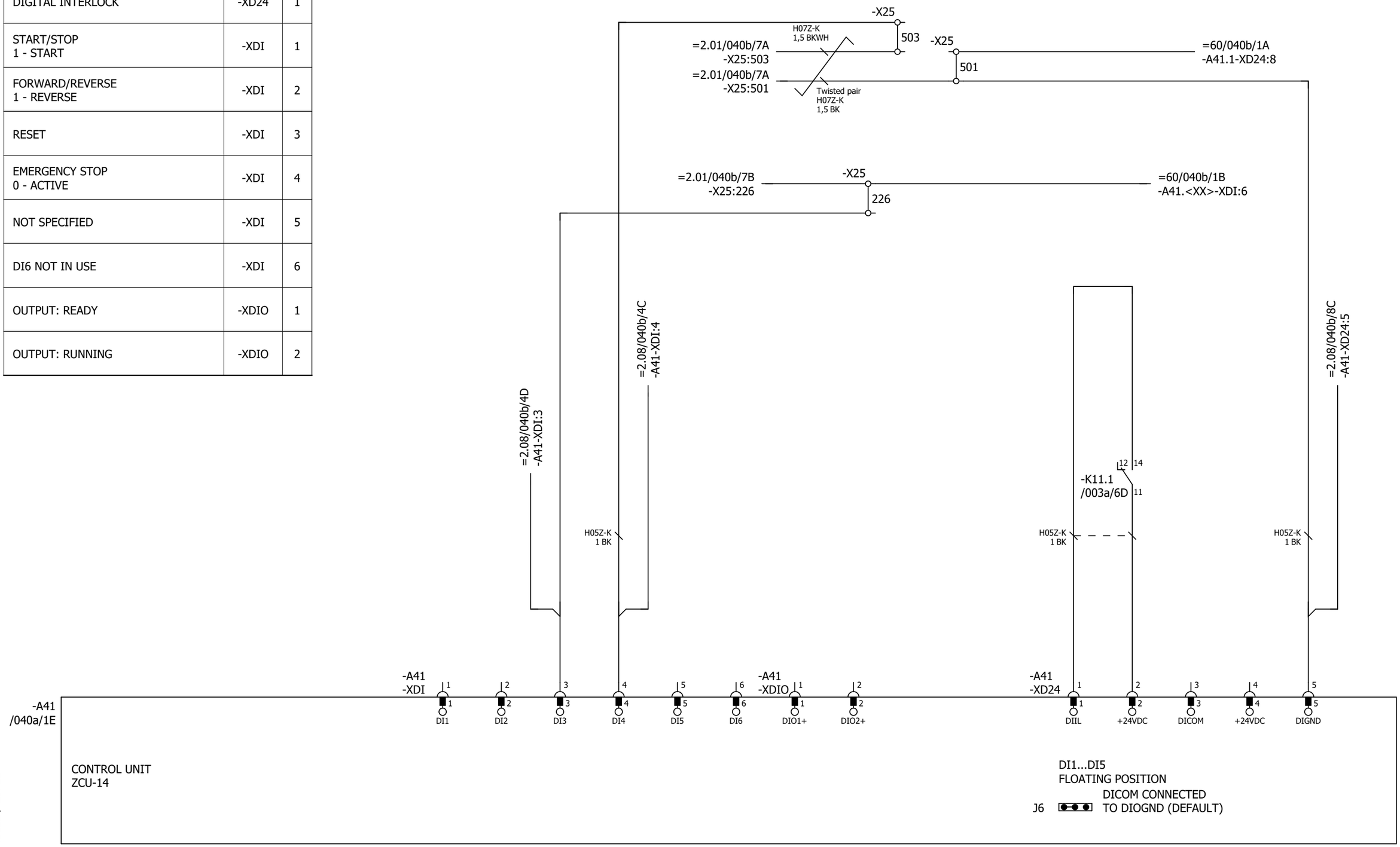

P345812 / 29711

Cust. Doc. No.	Prep. Sky-Xin Zhang 02.08.2023	Title CONTROL BOARD INV2.07 ACS880-107-0078A-3 400V	Circuit diagram EFS2
Cust. Ref. No.	App.		SAP Doc. No.
Customer WMMP	Project Zhaka Jack-up Lift System Zhaka Jack-up Lift System-1		EPLAN Doc. No. 3ABDC230674 - 2.07
			ABB Ref. No.
			Resp. Dept.

Item Des. = 2.07 + 2.07.1

Rev. .1 Sheet 040b

Cont. 040c

Control and status signals	Terminal	Pin
MOTOR TEMP. MONITORING 0(2)…10V	-XAI	4
AI2 NOT SPECIFIED BY DEFAULT NOT IN USE 0(4)…20mA	-XAI	6
CURR SOU MOT TEMP MONIT 0(4)...20mA	-XAO	1
CURRENT 0(4)…20mA ↔ 0(4)…MOTOR CURRENT	-XAO	3

P345812 / 29711

Cust. Doc. No.	Prep. Sky-Xin Zhang 02.08.2023	Title CONTROL BOARD INV2.07 ACS880-107-0078A-3 400V	Circuit diagram EFS2
Cust. Ref. No.	App.		SAP Doc. No.
Customer WMMP	Project Zhaka Jack-up Lift System Zhaka Jack-up Lift System-1		EPLAN Doc. No. 3ABDC230674 - 2.07
			ABB Ref. No.
			Resp. Dept.

Item Des.
= 2.07
+ 2.07.1

Rev. .1 Sheet 040c
Cont. 040d

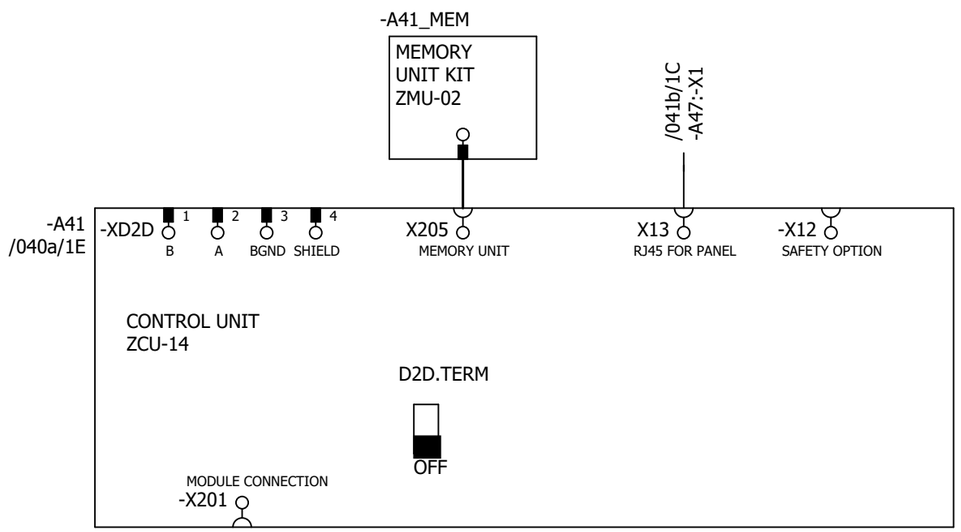

P345812 / 29711

Cust. Doc. No.	Prep. Sky-Xin Zhang 02.08.2023	Title CONTROL BOARD INV2.07 ACS880-107-0078A-3 400V	Circuit diagram EFS2
Cust. Ref. No.	App.		SAP Doc. No.
Customer WMMP	Project Zhaka Jack-up Lift System Zhaka Jack-up Lift System-1		EPLAN Doc. No. 3ABDC230674 - 2.07
			ABB Ref. No.
			Resp. Dept.

Item Des.	= 2.07 + 2.07.1
Rev. .1	Sheet 040d
Cont.	041a

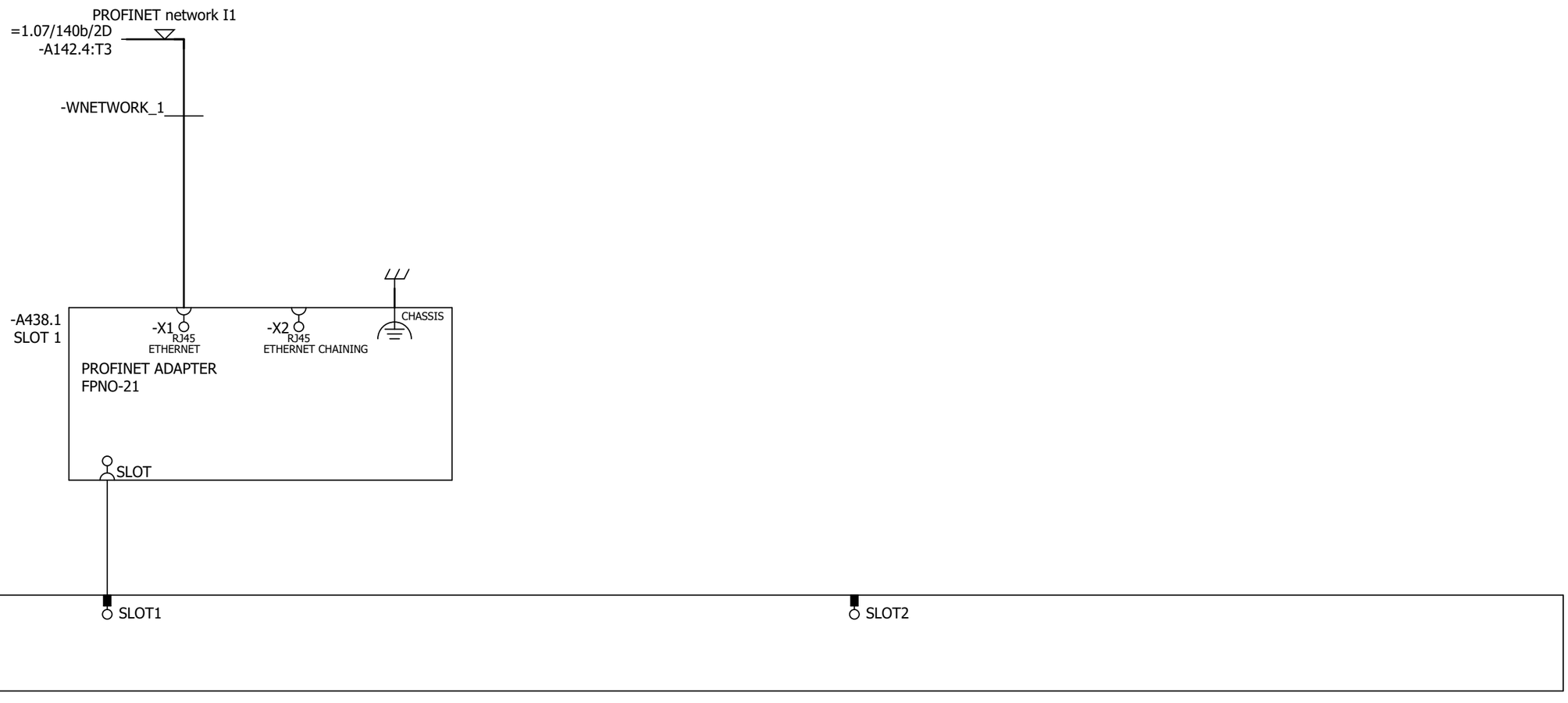

Cust. Doc. No.	Prep. Sky-Xin Zhang 02.08.2023	Title OPTION CARDS	Circuit diagram EFS2	Item Des.	
Cust. Ref. No.	App.	INV2.07	SAP Doc. No.	= 2.07	
Customer WMMP	Project Zhaka Jack-up Lift System	ACS880-107-0078A-3	EPLAN Doc. No. 3ABDC230674 - 2.07	+ 2.07.1	
	Zhaka Jack-up Lift System-1	400V	ABB Ref. No.	Rev. .1	Sheet 041a
			Resp. Dept.	Cont.	041b

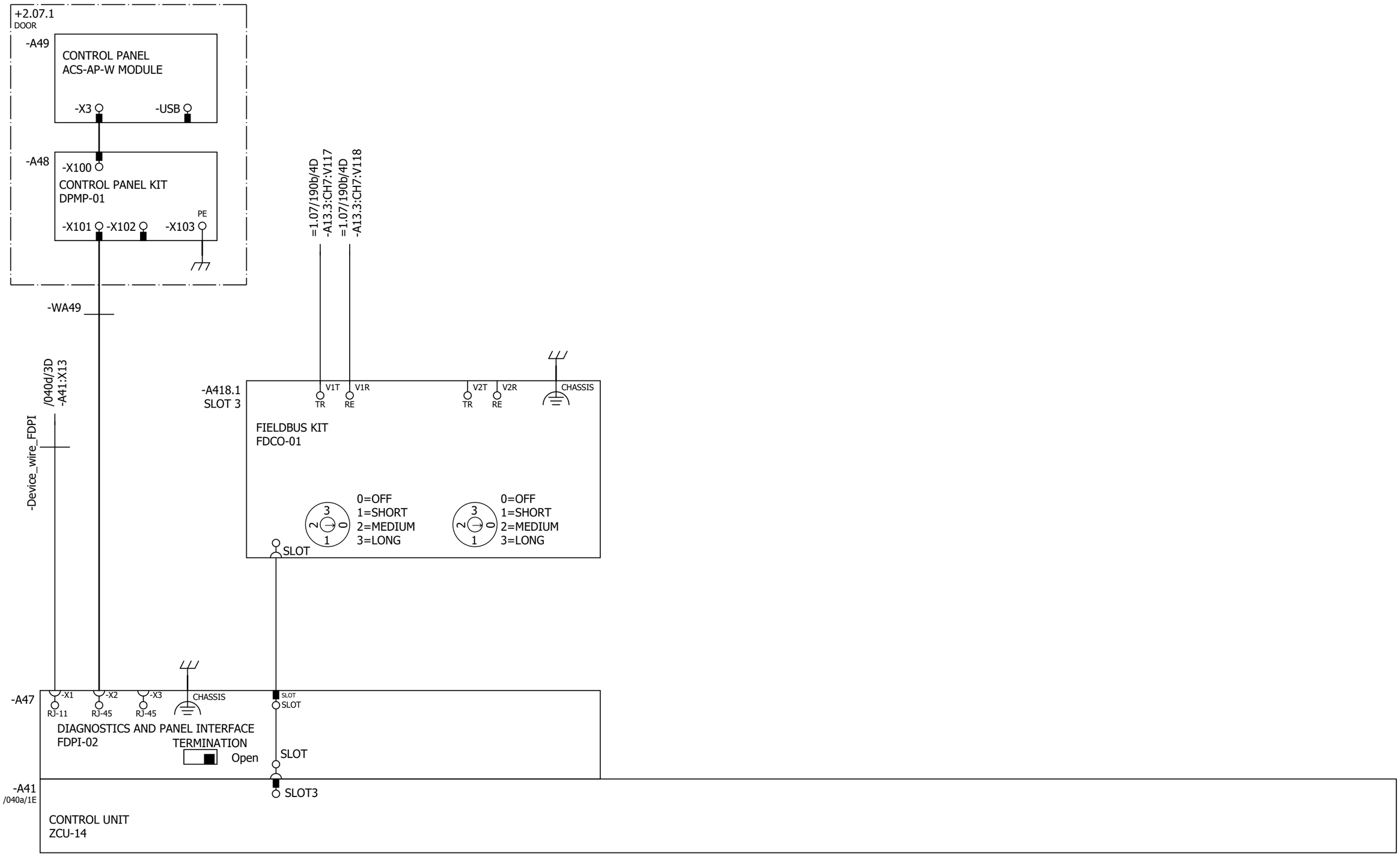

Cust. Doc. No.	Prep. Sky-Xin Zhang 02.08.2023	Title OPTION CARDS	Circuit diagram EFS2	Item Des.	
Cust. Ref. No.	App.	INV2.07	SAP Doc. No.	= 2.07	
Customer WMMP	Project Zhaka Jack-up Lift System	ACS880-107-0078A-3	EPLAN Doc. No. 3ABDC230674 - 2.07	+ 2.07.1	
	Zhaka Jack-up Lift System-1	400V	ABB Ref. No.	Rev. .1	Sheet 041b
			Resp. Dept.	Cont.	061a

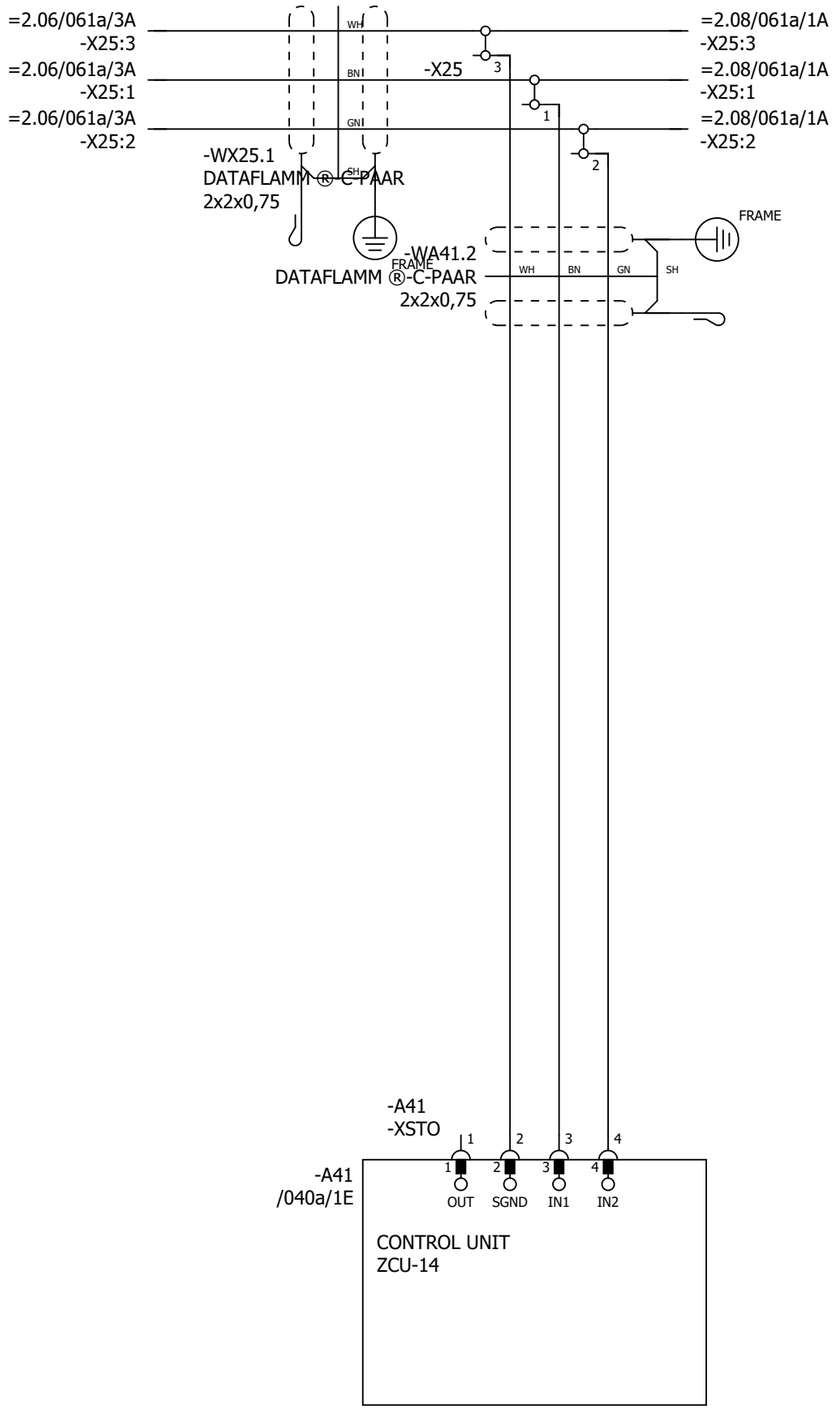

P345812 / 29711

SAFETY CIRCUIT
MACRO REVISION 6
RULES CONVERTED 19.7.2023

Cust. Doc. No.	Prep. Sky-Xin Zhang 02.08.2023	Title SAFETY CIRCUIT INV2.07 ACS880-107-0078A-3 400V	Circuit diagram EFS2
Cust. Ref. No.	App.		SAP Doc. No.
Customer WMMP	Project Zhaka Jack-up Lift System Zhaka Jack-up Lift System-1		EPLAN Doc. No. 3ABDC230674 - 2.07
			ABB Ref. No.
			Resp. Dept.

Item Des.
= 2.07
+ 2.07.1

Rev. .1 Sheet 061a
Cont. 095a

CABINET
HEATING

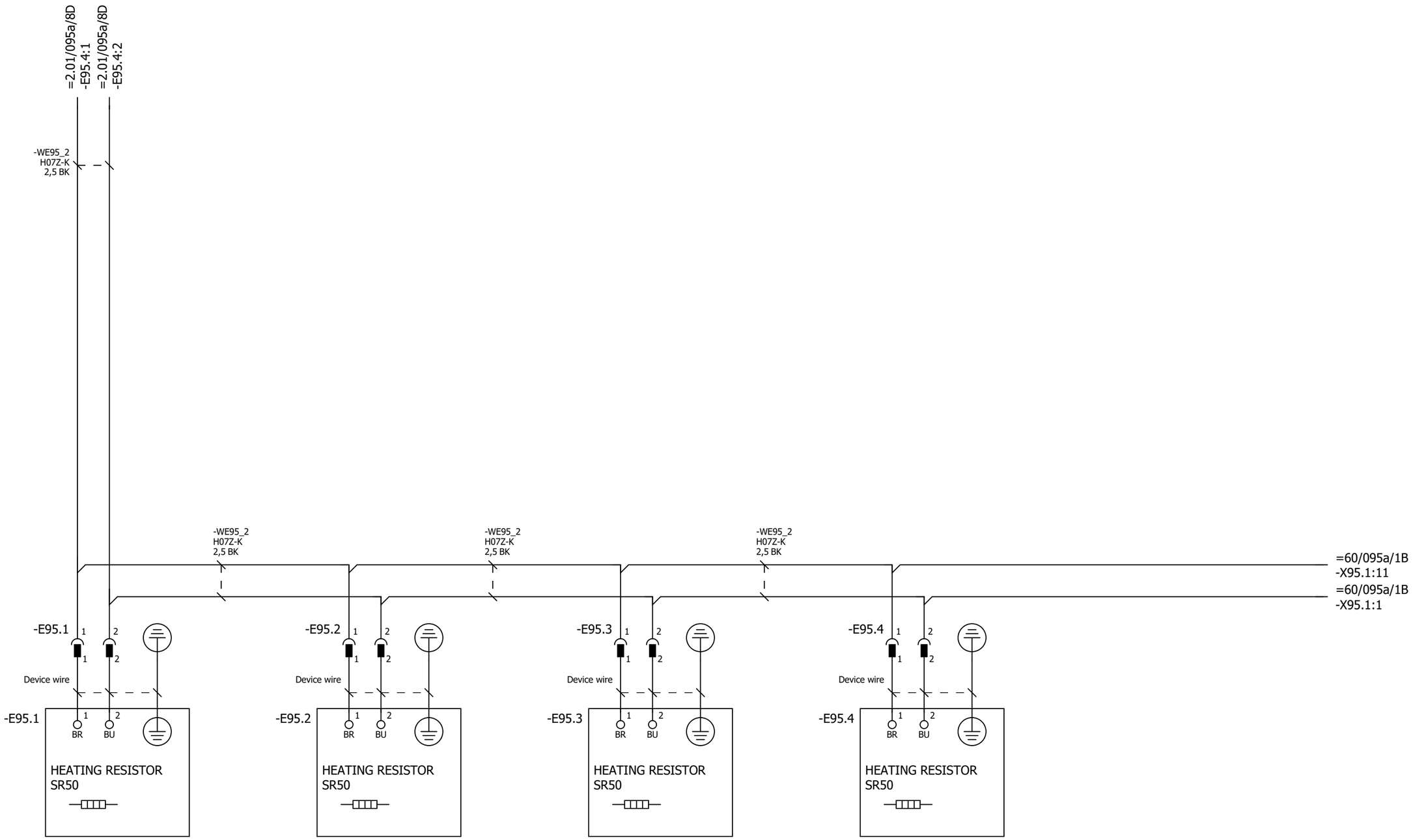

P345812 / 29711

Cust. Doc. No.	Prep. Sky-Xin Zhang 02.08.2023	Title CABINET HEATING	Circuit diagram EFS2	Item Des.	
Cust. Ref. No.	App.	INV2.07	SAP Doc. No.	= 2.07	
Customer WMMP	Project Zhaka Jack-up Lift System	ACS880-107-0078A-3	EPLAN Doc. No. 3ABDC230674 - 2.07	+ 2.07.1	
	Zhaka Jack-up Lift System-1	400V	ABB Ref. No.	Rev. .1	Sheet 095a
			Resp. Dept.	Cont.	&MPC/Part list_1

Part list: 3ABDC230674DU02019

Item	Sort String	Qty.Str	Unit	Component Number	Description and text	Technical data
0010		1.000	ST		ACS880-107-0078A-3+A012+B053+C121+C132+	
0020		1.000	ST		_C206+E210+F272+F287+F288+G300+G307+G315	
0030		1.000	ST		_+G320+G330+G344+H352+H367+J400+K492+L50	
0040		1.000	ST		_3+P913+Q964	
0050		1.000	ST		=2.07	
0060		1.000	ST		+2.07.1,INU3	
0070		1.000	ST		Powerconversionequipment	
0080	-A41_MEM	1.000	PC	3AXD50000006010	MEMORY UNIT KIT ZMU-02	
0090	-T11	1.000	PC	3AUA0000120009-M	ACS880-104-0078A-3+P922	+P922
0100	SCREW	1.000	PC	3AFE68681481	SCREW K30X10 TORX	PT WN1452 ZN
0110	SOFTWARE	1.000	PC	3AUA0000153462	SOFTWARE PRIMARY CONTROL PROGRA	AINF6 FOR ZCU-12/14
0120		1.000	ST		R4imoduleDCfuse	
0130	-F11.1-2	2.000	PC	3AXD50000000219	FUSE FR27UQ69V160T/160A	6.921 CP URQ 27X60MM FERRULE;AR
0140		1.000	ST		R3i-R4imoduleDCfusebase	
0150	(-F11.1-2)	2.000	PC	3AUA0000089227	FUSE HOLDER FUSE BASE US271MI 150A	FUSE BASE US271MI 150A 800V
0160		1.000	ST		motorterminalR4i,coppercable	
0170	-X1	1.000	PC	3ABD50000000270	CONNECTOR PPAC-50	50 MM2;150 A;800V
0180	-X1	1.000	PC	3ABD50000000270	CONNECTOR PPAC-50	50 MM2;150 A;800V
0190	-X1	1.000	PC	3ABD50000000270	CONNECTOR PPAC-50	50 MM2;150 A;800V
0200		1.000	ST		24VDCsupplyZCU	
0210	-WA41_1	1.000	PC	3AXD50000005218	WIRE HARNESS 24VDC SUPPLY X51 ZCU V	HALOGEN FREE;X51_A51
0220		1.000	ST		Rooffancontrol	
0230	-WA41_3	1.000	PC	3AXD50000002688	WIRE HARNESS FAN CONTROL MAIN WIRE	HALOGEN FREE;X208_X26.3
0240		1.000	ST		Toprowmodulewireharness	
0250	-WT11	1.000	PC	3AXD50000002256	WIRE HARNESS R4I FUSE_MODULE V2	HALOGEN FREE;MAIN CIRCUIT WIRE SET
0260	-WX1	1.000	PC	3AXD50000002258	WIRE HARNESS R4I MODULE_OUTPUT TR V	HALOGEN FREE;MAIN CIRCUIT WIRE SET
0270		1.000	ST		Optionmodule	
0280	-A418.1	1.000	PC	3AUA0000107392	COMMUNIC. ADAPTER FDCO-01	
0290		1.000	ST		Controlpanel	
0300	-A47	1.000	PC	3AUA0000108650	FIELDBUS KIT FDPI-02	PANEL BUS ADAPTER
0310	-A48	1.000	PC	3AUA0000108878	CONTROL PANEL KIT DPMP-01	DPMP-01
0320	-A49	1.000	PC	3AXD50000025964	CONTROL PANEL ACS-AP-W MODULE	ASSISTANT PANEL WIRELESS CPU1
0330		1.000	ST		DCfusesupervision	

P345812 / 29711

Cust. Doc. No.	Prep.	Title PART LIST INV2.07 ACS880-107-0078A-3 400V	Item Des. = 2.07 +
Cust. Ref. No.	App.		SAP Doc. No.
Customer WMMP	Project Zhaka Jack-up Lift System Zhaka Jack-up Lift System-1		EPLAN Doc. No. 3ABDC230674 - 2.07
			ABB Ref. No. / Rev. / Sheet Part list_1
			Resp. Dept. / Cont. Part list_2

Part list: 3ABDC230674DU02019

Item	Sort String	Qty.Str	Unit	Component Number	Description and text	Technical data
0340	-K11.1-2	2.000	PC	3AXD50000021313	RELAY DEK_REL_G24/21	250 V;6 A;COIL 24VDC
0350	-WK11	1.000	PC	3AXD50000003220	WIRE HARNESS 6 MODULE 800MM CABINET	HALOGEN FREE;DC FUSE SUPERVISION
0360	-WK11	1.000	PC	3AXD50000003227	WIRE HARNESS 1ST MODULE SUPERV 800M	HALOGEN FREE;DC FUSE SUPERVISION
0370	-WK11	1.000	PC	3AXD50000003228	WIRE HARNESS 2ND MODULE SUPERV 800M	HALOGEN FREE;DC FUSE SUPERVISION
0380	-WK11	1.000	PC	3AXD50000003229	WIRE HARNESS 3RD MODULE SUPERV 800M	HALOGEN FREE;DC FUSE SUPERVISION
0390	-WK11	1.000	PC	3AXD50000003230	WIRE HARNESS 4TH MODULE SUPERV 800M	HALOGEN FREE;DC FUSE SUPERVISION
0400	-WK11	1.000	PC	3AXD50000003231	WIRE HARNESS 5TH MODULE SUPERV 800M	HALOGEN FREE;DC FUSE SUPERVISION
0410	-WK11	1.000	PC	3AXD50000003232	WIRE HARNESS 6TH MODULE SUPERV 800M	HALOGEN FREE;DC FUSE SUPERVISION
0420		1.000	ST		FieldBus	
0430	-A438.1	1.000	PC	3AXD50000192779	OPTION MODULE FPNO-21	PROFINET IO
0440		1.000	ST		Supplementtorelay	
0450	(-K11.1)	1.000	PC	3AXD50000021312	TERMINAL BLOCK ST EB2_DIK_RD 2716693	2POLE, 6,15 MM PITCH;FOR DEK RELAYS
0460		1.000	ST		CommonDCfuse	
0470	-F10.1-2	2.000	PC	3AXD50000000246	FUSE 170M4416	630 A;690 V;DIN1 FLUSH END;AR;200KA
0480	-F10.3-4	2.000	PC	3AXD50000000234	FUSE 170M4410	315 A;690 V;DIN1 FLUSH END;AR;200KA
0490		1.000	ST		Cabinetfan	
0500	-F26	1.000	PC	3AFE68264758	PROTECTION SWITCH S 201-K4	4A, 440VAC/60VDC
0510	-G26.1	1.000	PC	3AXD50000000592	FAN R3G225-RH17-23	230V;96W;50HZ;60HZ;0,77A;1080M3S CCC,UL
0520	-G26.2	1.000	PC	3AXD50000000592	FAN R3G225-RH17-23	230V;96W;50HZ;60HZ;0,77A;1080M3S CCC,UL
0530	-K26	1.000	PC	3AUA0000102191	RELAY RCL425024-SOCKET-DIODE	8 A;24 V;24VDC, 2C/O
0540	-X26.1	1.000	PC	3AXD50000000723	TERMINAL BLOCK AS X26 FAN SUPPLY PLUG	12,00 AWG;2,50 mm2;24,00 A;500,00 V
0550	(-X26.1)	1.000	PC	3AXD50000000724	TERMINAL BLOCK AS X26 FAN SUPPLY SOCKET	12,00 AWG;2,50 mm2;24,00 A;500,00 V
0560	-X26.2	1.000	PC	3AXD50000000723	TERMINAL BLOCK AS X26 FAN SUPPLY PLUG	12,00 AWG;2,50 mm2;24,00 A;500,00 V
0570	(-X26.2)	1.000	PC	3AXD50000000724	TERMINAL BLOCK AS X26 FAN SUPPLY SOCKET	12,00 AWG;2,50 mm2;24,00 A;500,00 V
0580		1.000	ST		Auxvoltagedistribution	
0590	-X22	1.000	PC	3AXD50000001632	TERMINAL BLOCK AS X22	12 AWG;2 mm2;24 A;800 V
0600	-X25	1.000	PC	3AXD50000001609	TERMINAL BLOCK AS X25 (1)	6 AWG;10 mm2;57 A;800 V
0610	-X25	1.000	PC	3ABD00609550	ASSEMBLY PLATE FOR X25 TERMINAL	acs880
0620		1.000	ST		EMSTOPterminalblock	
0630	-X25	1.000	PC	3AXD50000001610	TERMINAL BLOCK AS X25 (2)	12 AWG;2 mm2;24 A;500 V
0640		1.000	ST		STOterminalblock	
0650	-X25	1.000	PC	3AXD50000001631	TERMINAL BLOCK AS X60	12 AWG;2 mm2;24 A;500 V
0660		1.000	ST		24vDCdistributionwithUPS	

P345812 / 29711

Cust. Doc. No.	Prep.	Title PART LIST INV2.07 ACS880-107-0078A-3 400V	Item Des. = 2.07 +
Cust. Ref. No.	App.		SAP Doc. No.
Customer WMMP	Project Zhaka Jack-up Lift System Zhaka Jack-up Lift System-1		EPLAN Doc. No. 3ABDC230674 - 2.07
			ABB Ref. No. / Rev. / Sheet Part list_2
			Resp. Dept. / Cont. Part list_3

Part list: 3ABDC230674DU02019

Item	Sort String	Qty.Str	Unit	Component Number	Description and text	Technical data
0670	-F21	1.000	PC	3AFE68264766	PROTECTION SWITCH S 201-K6	S 201-K6
0680		1.000	ST		24VDCsupply	
0690	-WX51	1.000	PC	3AXD50000005214	WIRE HARNESS 24VDC SUPPLY 800MM V2	HALOGEN FREE;X52_X51
0700		1.000	ST		Cabinetrooffansupply	
0710	-WG26	1.000	PC	3AXD50000036922	WIRE HARNESS CABINET ROOF FAN SUPPL	R1I-R4I 800/1000MM
0720		1.000	ST		Cabinetrooffancontrol	
0730	-WX26_1	1.000	PC	3AXD50000005080	WIRE HARNESS 800MM CABINET LOWER RO	HALOGEN FREE;X26.3_X26.4
0740	-WX26_2	1.000	PC	3AXD50000005078	WIRE HARNESS 800MM CABINET UPPER RO	HALOGEN FREE;X26.3_K26
0750		1.000	ST		24VDCdistribution	
0760	-F52.1-5	5.000	PC	3AXD50000005465	FUSE MDL-7-R	7 A;250 V;¼" x 1¼";GLASS TUBE;TIME-DELAY
0770	-T22	1.000	PC	3ABD00010542	POWER SUPPLY NDR-120-24	24V 5A
0780	-X21	1.000	PC	3AXD50000001633	TERMINAL BLOCK AS X21	12 AWG;2 mm2;24 A;800 V
0790	-X52	1.000	PC	3AXD50000005221	TERMINAL BLOCK AS 24VDC X52 TERM BLOCK 5	10 AWG;4 mm2;10 A;500 V;fuse size 6,3x32
0800		1.000	ST		24vDCdistribution	
0810	-T51	1.000	PC	3ABD00010602	POWER SUPPLY NDR-240-24	24V 10A
0820	-T52	1.000	PC	3ABD00010602	POWER SUPPLY NDR-240-24	24V 10A
0830		1.000	ST		Cabinetheaters	
0840	-E95.1-4	4.000	PC	3AFE09827498	HEATING EQUIPMENT SR50	HEATER 50W/220V(110-270VACDC)
0850	(-E95.1-4)	4.000	PC	3AXD50000010133	ASSEMBLY PLATE HEATER	STEEL HDG 1,0;DEGREAS CLEAN
0860	(-E95.1-4)	1.000	PC	3AXD50000010509	ASSEMBLY DRAWING HEATER 50 AND 100W	
0870	X95.1A-4A	4.000	PC	3AXD50000007033	CONNECTOR SC 2,5/ 2	2,50 mm2;24 A;500 V;2-POS. MALE
0880	X95.1B-4B	4.000	PC	3AUA0000066694	CONNECTOR SSL2.5 3043815	LOCKING ELEMENTS FOR ST-COMBI CONNECTOR
0890		1.000	ST		Supplementforrelay	
0900	(-K11)	2.000	PC	3AXD50000021311	CONNECTOR EB 10-DIK RD 2716774	10POLE, 6,15 MM PITCH;FOR DEK RELAYS
0910	(-K11)	1.000	PC	3AXD50000021314	RELAY D-DEK_1,5_GN	end plate

P345812 / 29711

Cust. Doc. No.	Prep.	Title PART LIST INV2.07 ACS880-107-0078A-3 400V	Item Des. = 2.07 +
Cust. Ref. No.	App.		SAP Doc. No.
Customer WMMP	Project Zhaka Jack-up Lift System Zhaka Jack-up Lift System-1		EPLAN Doc. No. 3ABDC230674 - 2.07
			ABB Ref. No. / Rev. / Sheet Part list_3
			Resp. Dept. / Cont. &EMA/1

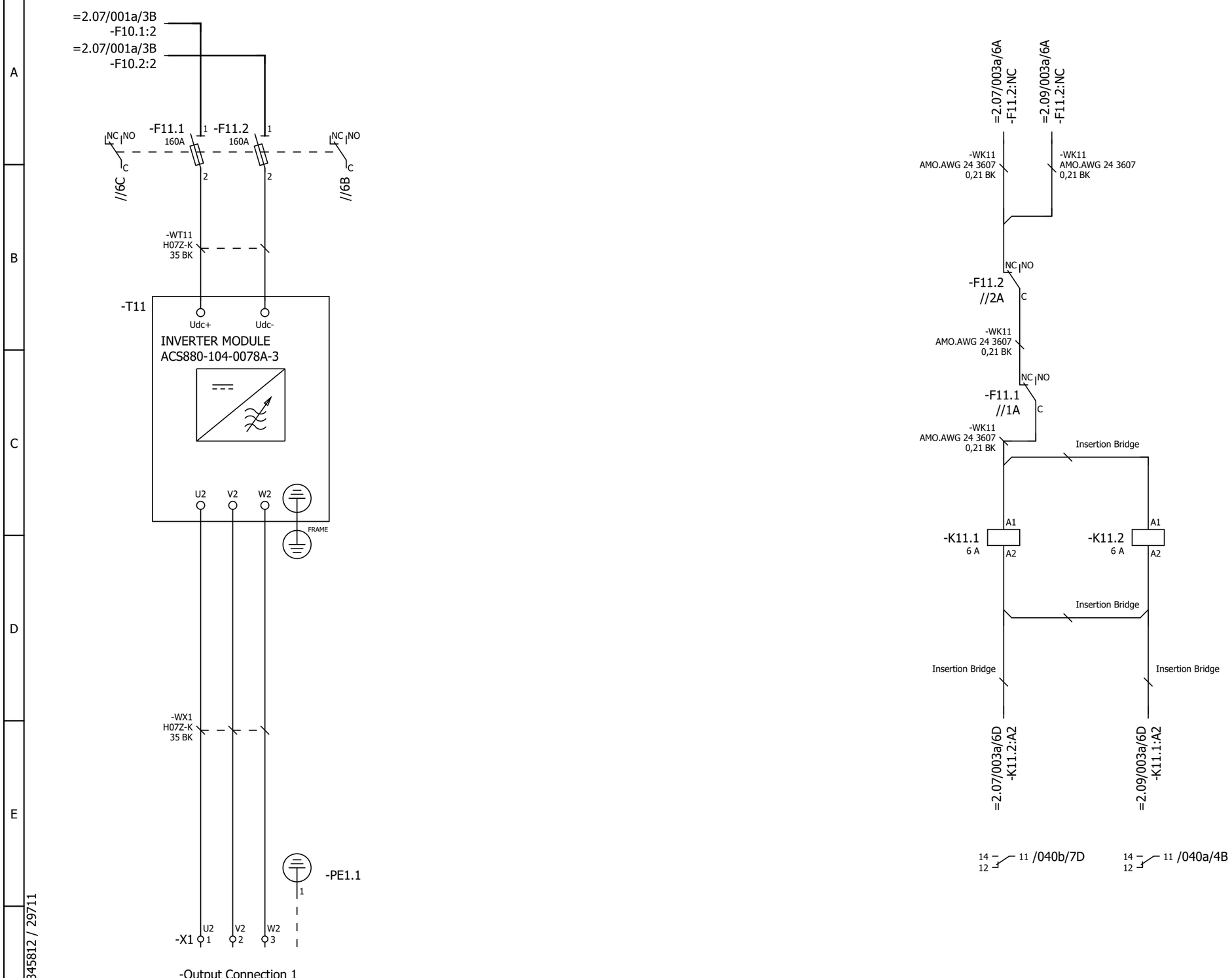

P345812 / 29711

Cust. Doc. No.	Prep. Sky-Xin Zhang 02.08.2023	Title MAIN CIRCUIT	Circuit diagram EFS2
Cust. Ref. No.	App.	INV2.08	SAP Doc. No.
Customer WMMP	Project Zhaka Jack-up Lift System	ACS880-107-0078A-3	EPLAN Doc. No. 3ABDC230674 - 2.08
	Zhaka Jack-up Lift System-1	400V	ABB Ref. No.
			Resp. Dept.

Item Des.
= 2.08
+ 2.07.1

Rev. .1 Sheet 003a
Cont. 040a

Control and status signals	Terminal	Pin
E-STOP FEEDBACK 1 - ESTOP ACTIVE	-XRO1	12
RUNNING 1 - RUNNING	-XRO2	22
FAULT (-1) 1 - NO FAULT	-XRO3	32

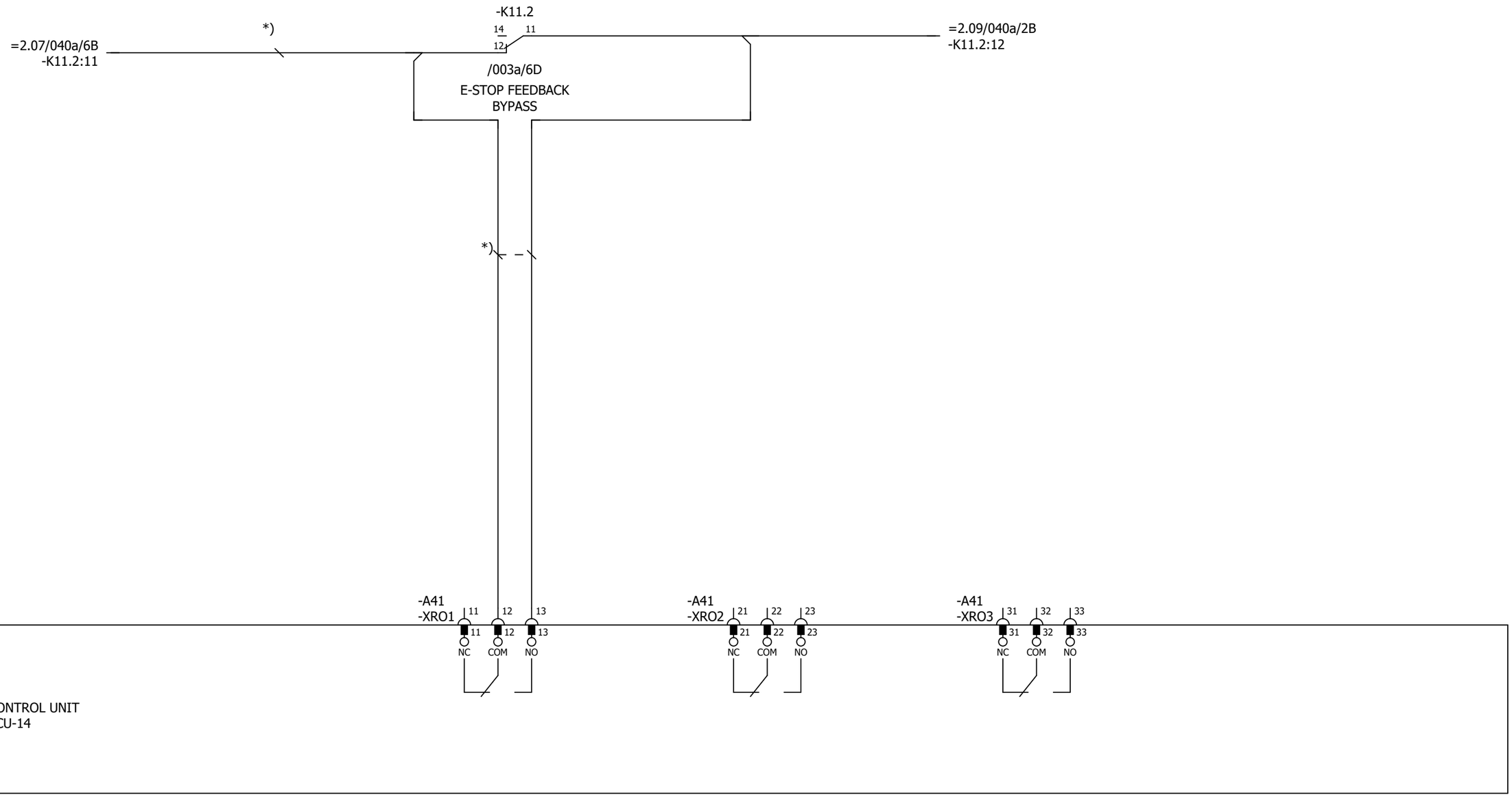

Cust. Doc. No.	Prep. Sky-Xin Zhang 02.08.2023	Title CONTROL BOARD INV2.08 ACS880-107-0078A-3 400V	Circuit diagram EFS2	Item Des.	
Cust. Ref. No.	App.		SAP Doc. No.	= 2.08 + 2.07.1	
Customer WMMP	Project Zhaka Jack-up Lift System Zhaka Jack-up Lift System-1	ABB	EPLAN Doc. No. 3ABDC230674 - 2.08		
			ABB Ref. No.	Rev. .1	Sheet 040a
			Resp. Dept.	Cont.	040b

Control and status signals	Terminal	Pin
DIGITAL INTERLOCK	-XD24	1
START/STOP 1 - START	-XDI	1
FORWARD/REVERSE 1 - REVERSE	-XDI	2
RESET	-XDI	3
EMERGENCY STOP 0 - ACTIVE	-XDI	4
NOT SPECIFIED	-XDI	5
DI6 NOT IN USE	-XDI	6
OUTPUT: READY	-XDIO	1
OUTPUT: RUNNING	-XDIO	2

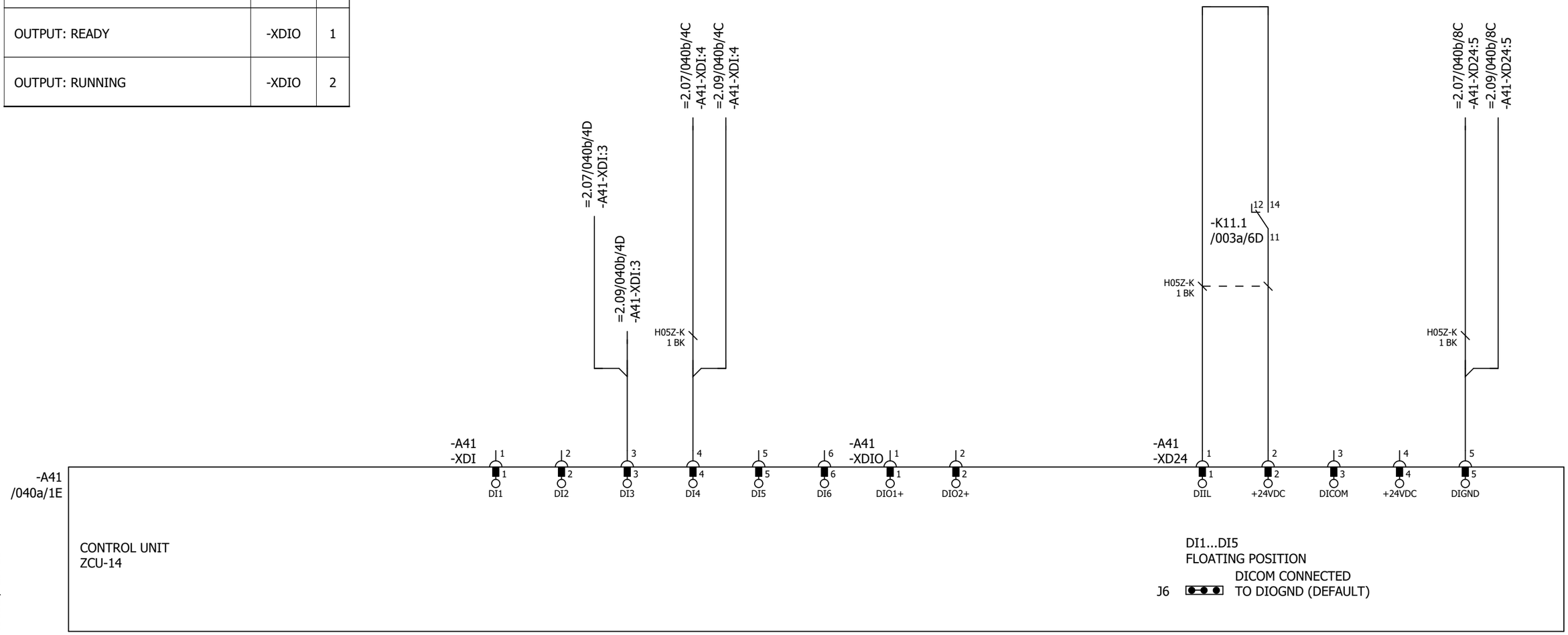

P345812 / 29711

Cust. Doc. No.	Prep. Sky-Xin Zhang 02.08.2023	Title CONTROL BOARD INV2.08 ACS880-107-0078A-3 400V	Circuit diagram EFS2	Item Des.	
Cust. Ref. No.	App.		SAP Doc. No.	= 2.08 + 2.07.1	
Customer WMMP	Project Zhaka Jack-up Lift System Zhaka Jack-up Lift System-1	ABB	EPLAN Doc. No. 3ABDC230674 - 2.08		
			ABB Ref. No.	Rev. .1	Sheet 040b
			Resp. Dept.	Cont.	040c

Control and status signals	Terminal	Pin
MOTOR TEMP. MONITORING 0(2)…10V	-XAI	4
AI2 NOT SPECIFIED BY DEFAULT NOT IN USE 0(4)…20mA	-XAI	6
CURR SOU MOT TEMP MONIT 0(4)...20mA	-XAO	1
CURRENT 0(4)…20mA ↔ 0(4)…MOTOR CURRENT	-XAO	3

P345812 / 29711

Cust. Doc. No.	Prep. Sky-Xin Zhang 02.08.2023	Title CONTROL BOARD INV2.08 ACS880-107-0078A-3 400V	Circuit diagram EFS2
Cust. Ref. No.	App.		SAP Doc. No.
Customer WMMP	Project Zhaka Jack-up Lift System Zhaka Jack-up Lift System-1		EPLAN Doc. No. 3ABDC230674 - 2.08
			ABB Ref. No.
			Resp. Dept.

Item Des.
= 2.08
+ 2.07.1

Rev. .1 Sheet 040c
Cont. 040d

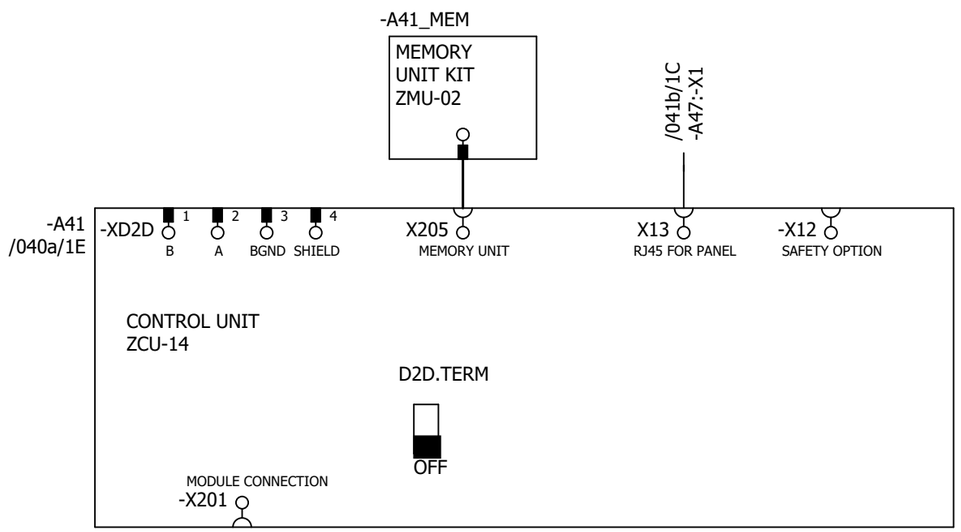

P345812 / 29711

Cust. Doc. No.	Prep. Sky-Xin Zhang 02.08.2023	Title CONTROL BOARD INV2.08 ACS880-107-0078A-3 400V	Circuit diagram EFS2
Cust. Ref. No.	App.		SAP Doc. No.
Customer WMMP	Project Zhaka Jack-up Lift System Zhaka Jack-up Lift System-1		EPLAN Doc. No. 3ABDC230674 - 2.08
			ABB Ref. No.
			Resp. Dept.

Item Des.	= 2.08 + 2.07.1
Rev. .1	Sheet 040d
Cont.	041a

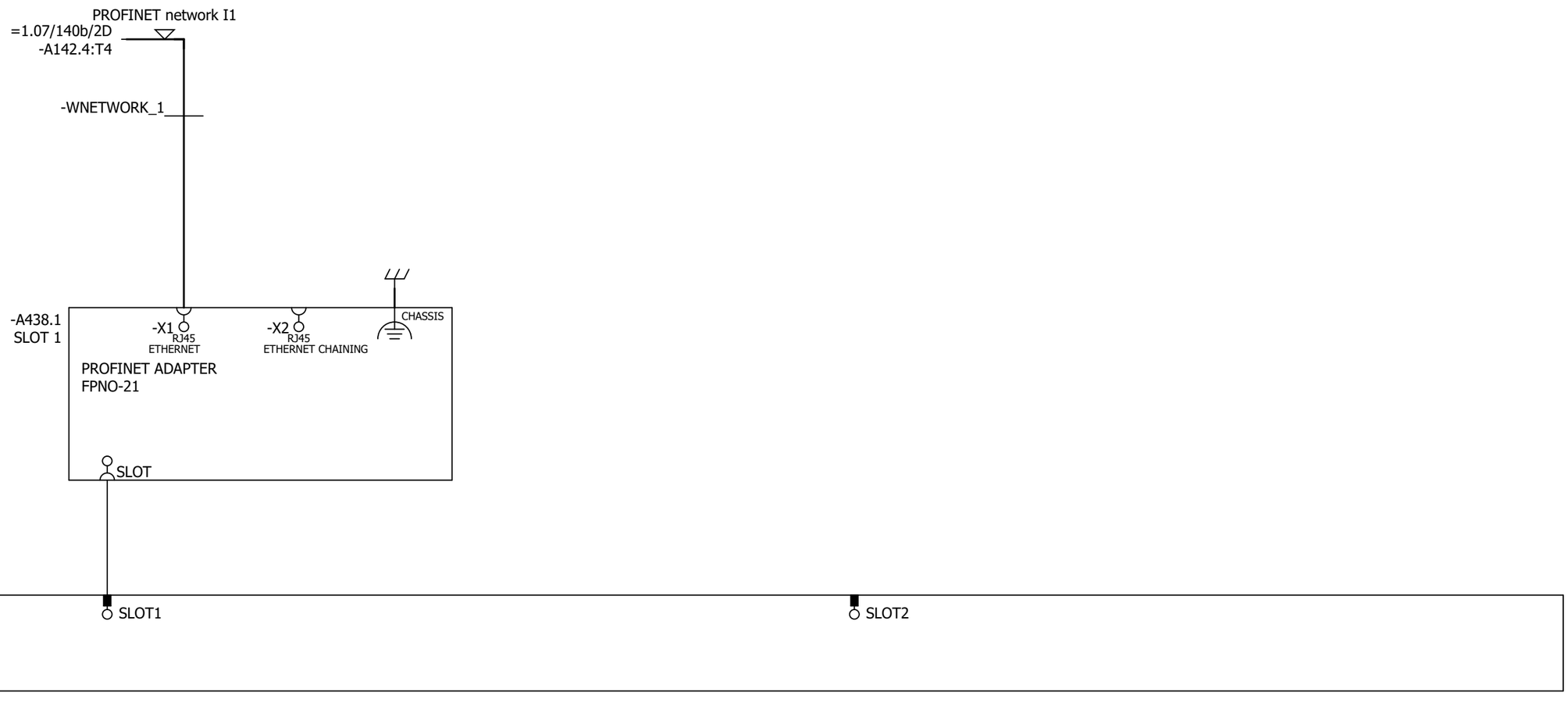

Cust. Doc. No.	Prep. Sky-Xin Zhang 02.08.2023	Title OPTION CARDS INV2.08 ACS880-107-0078A-3 400V	Circuit diagram EFS2
Cust. Ref. No.	App.		SAP Doc. No.
Customer WMMP	Project Zhaka Jack-up Lift System Zhaka Jack-up Lift System-1		EPLAN Doc. No. 3ABDC230674 - 2.08
			ABB Ref. No.
			Resp. Dept.

Item Des.
= 2.08
+ 2.07.1

Rev. .1 Sheet 041a
Cont. 041b

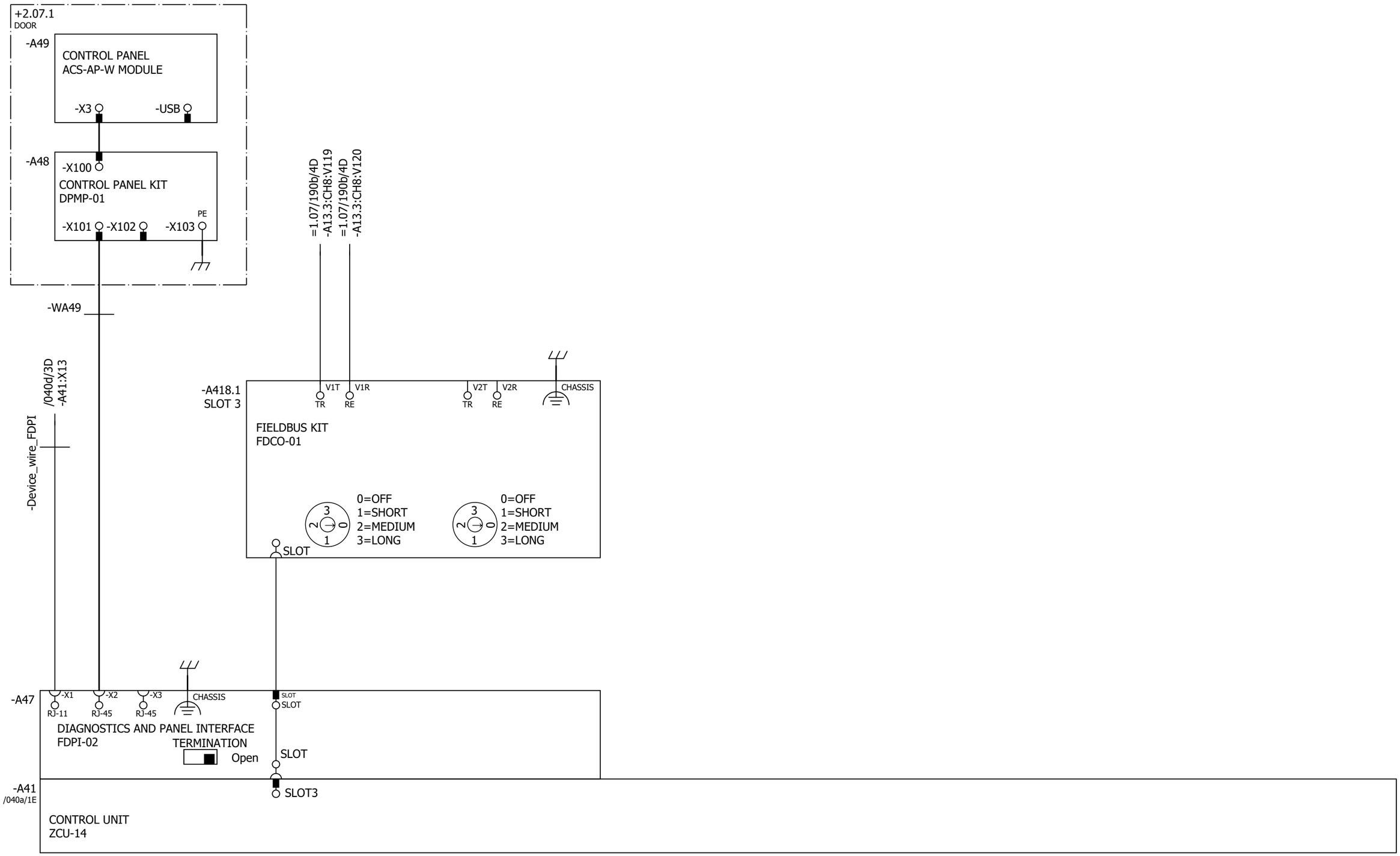

Cust. Doc. No.	Prep. Sky-Xin Zhang 02.08.2023	Title OPTION CARDS INV2.08 ACS880-107-0078A-3 400V	Circuit diagram EFS2
Cust. Ref. No.	App.		SAP Doc. No.
Customer WMMP	Project Zhaka Jack-up Lift System Zhaka Jack-up Lift System-1		EPLAN Doc. No. 3ABDC230674 - 2.08
			ABB Ref. No.
			Resp. Dept.

Item Des.
= 2.08
+ 2.07.1

Rev. .1 Sheet 041b
Cont. 061a

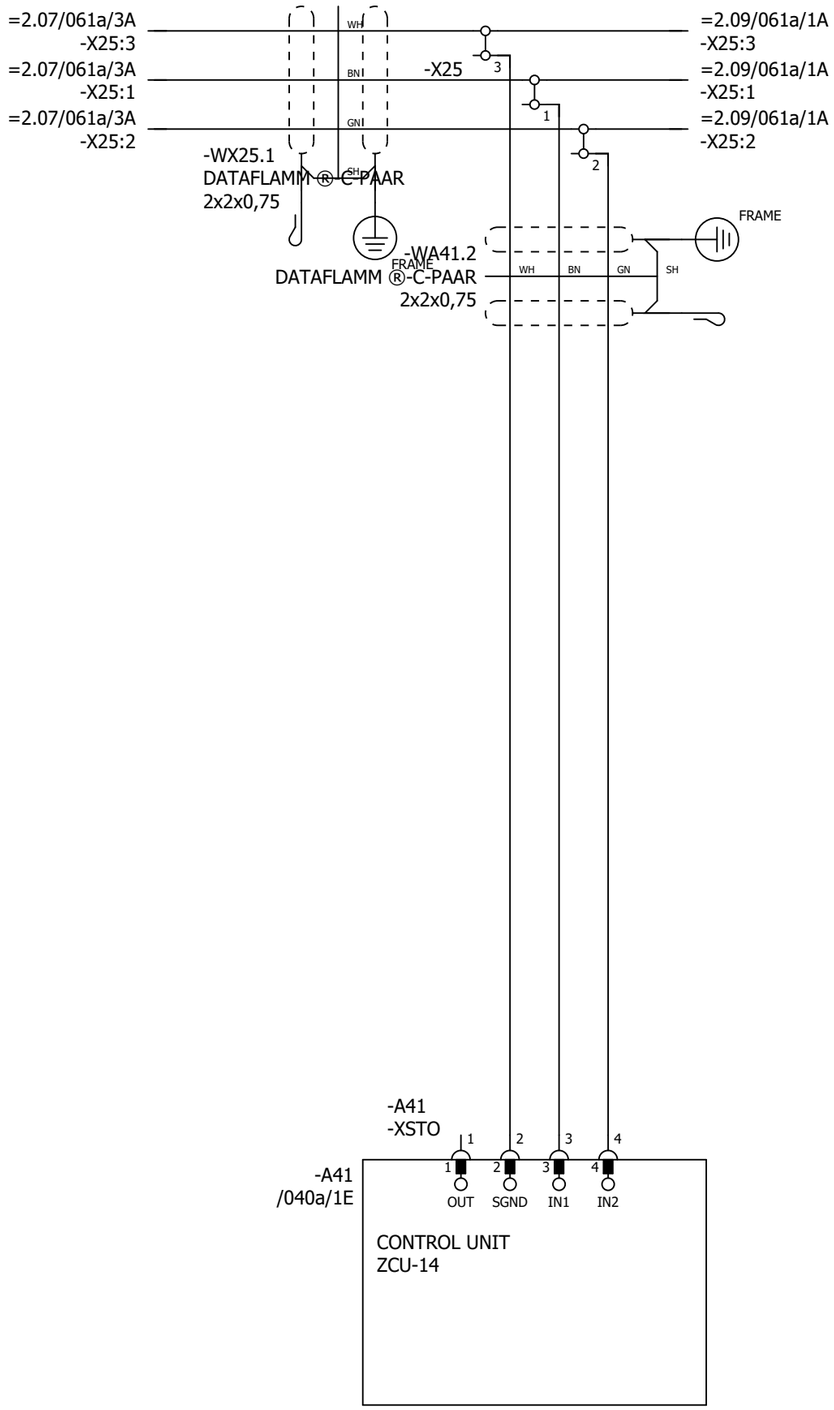

P345812 / 29711

SAFETY CIRCUIT
MACRO REVISION 6
RULES CONVERTED 19.7.2023

Cust. Doc. No.	Prep. Sky-Xin Zhang 02.08.2023	Title SAFETY CIRCUIT	Circuit diagram EFS2	Item Des.	
Cust. Ref. No.	App.	INV2.08	SAP Doc. No.	= 2.08	
Customer WMMP	Project Zhaka Jack-up Lift System	ACS880-107-0078A-3	EPLAN Doc. No. 3ABDC230674 - 2.08	+ 2.07.1	
	Zhaka Jack-up Lift System-1	400V	ABB Ref. No.	Rev. .1	Sheet 061a
			Resp. Dept.	Cont.	&MPC/Part list_1

Part list: 3ABDC230674DU02020

Item	Sort String	Qty.Str	Unit	Component Number	Description and text	Technical data
0010		1.000	ST		ACS880-107-0078A-3+A012+B053+C121+C132+	
0020		1.000	ST		_C206+E210+F272+F287+F288+G300+G307+G315	
0030		1.000	ST		_+G320+G330+G344+H352+H367+J400+K492+K49	
0040		1.000	ST		_3+L503+P913+Q964	
0050		1.000	ST		=2.08	
0060		1.000	ST		+2.07.1,INU3	
0070		1.000	ST		Powerconversionequipment	
0080	-A41_MEM	1.000	PC	3AXD50000006010	MEMORY UNIT KIT ZMU-02	
0090	-T11	1.000	PC	3AUA0000120009-M	ACS880-104-0078A-3+P922	+P922
0100	SCREW	1.000	PC	3AFE68681481	SCREW K30X10 TORX	PT WN1452 ZN
0110	SOFTWARE	1.000	PC	3AUA0000153462	SOFTWARE PRIMARY CONTROL PROGRA	AINF6 FOR ZCU-12/14
0120		1.000	ST		R4imoduleDCfuse	
0130	-F11.1-2	2.000	PC	3AXD50000000219	FUSE FR27UQ69V160T/160A	6.921 CP URQ 27X60MM FERRULE;AR
0140		1.000	ST		R3i-R4imoduleDCfusebase	
0150	(-F11.1-2)	2.000	PC	3AUA0000089227	FUSE HOLDER FUSE BASE US271MI 150A	FUSE BASE US271MI 150A 800V
0160		1.000	ST		motorterminalR4i,coppercable	
0170	-X1	1.000	PC	3ABD50000000270	CONNECTOR PPAC-50	50 MM2;150 A;800V
0180	-X1	1.000	PC	3ABD50000000270	CONNECTOR PPAC-50	50 MM2;150 A;800V
0190	-X1	1.000	PC	3ABD50000000270	CONNECTOR PPAC-50	50 MM2;150 A;800V
0200		1.000	ST		24VDCsupplyZCU	
0210	-WA41_1	1.000	PC	3AXD50000005218	WIRE HARNESS 24VDC SUPPLY X51 ZCU V	HALOGEN FREE;X51_A51
0220		1.000	ST		Rooffancontrol	
0230	-WA41_3	1.000	PC	3AXD50000002688	WIRE HARNESS FAN CONTROL MAIN WIRE	HALOGEN FREE;X208_X26.3
0240		1.000	ST		Toprowmodulewireharness	
0250	-WT11	1.000	PC	3AXD50000002256	WIRE HARNESS R4I FUSE_MODULE V2	HALOGEN FREE;MAIN CIRCUIT WIRE SET
0260	-WX1	1.000	PC	3AXD50000002258	WIRE HARNESS R4I MODULE_OUTPUT TR V	HALOGEN FREE;MAIN CIRCUIT WIRE SET
0270		1.000	ST		Optionmodule	
0280	-A418.1	1.000	PC	3AUA0000107392	COMMUNIC. ADAPTER FDCO-01	
0290		1.000	ST		Controlpanel	
0300	-A47	1.000	PC	3AUA0000108650	FIELDBUS KIT FDPI-02	PANEL BUS ADAPTER
0310	-A48	1.000	PC	3AUA0000108878	CONTROL PANEL KIT DPMP-01	DPMP-01
0320	-A49	1.000	PC	3AXD50000025964	CONTROL PANEL ACS-AP-W MODULE	ASSISTANT PANEL WIRELESS CPU1
0330		1.000	ST		DCfusesupervision	

P345812 / 29711

Cust. Doc. No.	Prep.	Title PART LIST INV2.08 ACS880-107-0078A-3 400V	Item Des. = 2.08 +
Cust. Ref. No.	App.		SAP Doc. No.
Customer WMMP	Project Zhaka Jack-up Lift System Zhaka Jack-up Lift System-1		EPLAN Doc. No. 3ABDC230674 - 2.08
			ABB Ref. No. / Rev. / Sheet Part list_1
			Resp. Dept. / Cont. Part list_2

Part list: 3ABDC230674DU02020

Item	Sort String	Qty.Str	Unit	Component Number	Description and text	Technical data
0340	-K11.1-2	2.000	PC	3AXD50000021313	RELAY DEK_REL_G24/21	250 V;6 A;COIL 24VDC
0350		1.000	ST		Profinetswitch	
0360		1.000	ST		FieldBus	
0370	-A438.1	1.000	PC	3AXD50000192779	OPTION MODULE FPNO-21	PROFINET IO
0380		1.000	ST		Supplementtorelay	
0390	(-K11.1)	1.000	PC	3AXD50000021312	TERMINAL BLOCK ST EB2_DIK_RD 2716693	2POLE, 6,15 MM PITCH;FOR DEK RELAYS

P345812 / 29711

Cust. Doc. No.	Prep.	Title PART LIST INV2.08 ACS880-107-0078A-3 400V	Item Des. = 2.08 +
Cust. Ref. No.	App.		SAP Doc. No.
Customer WMMP	Project Zhaka Jack-up Lift System Zhaka Jack-up Lift System-1		EPLAN Doc. No. 3ABDC230674 - 2.08
			ABB Ref. No. / Rev. / Sheet Part list_2
			Resp. Dept. / Cont. &EMA/1

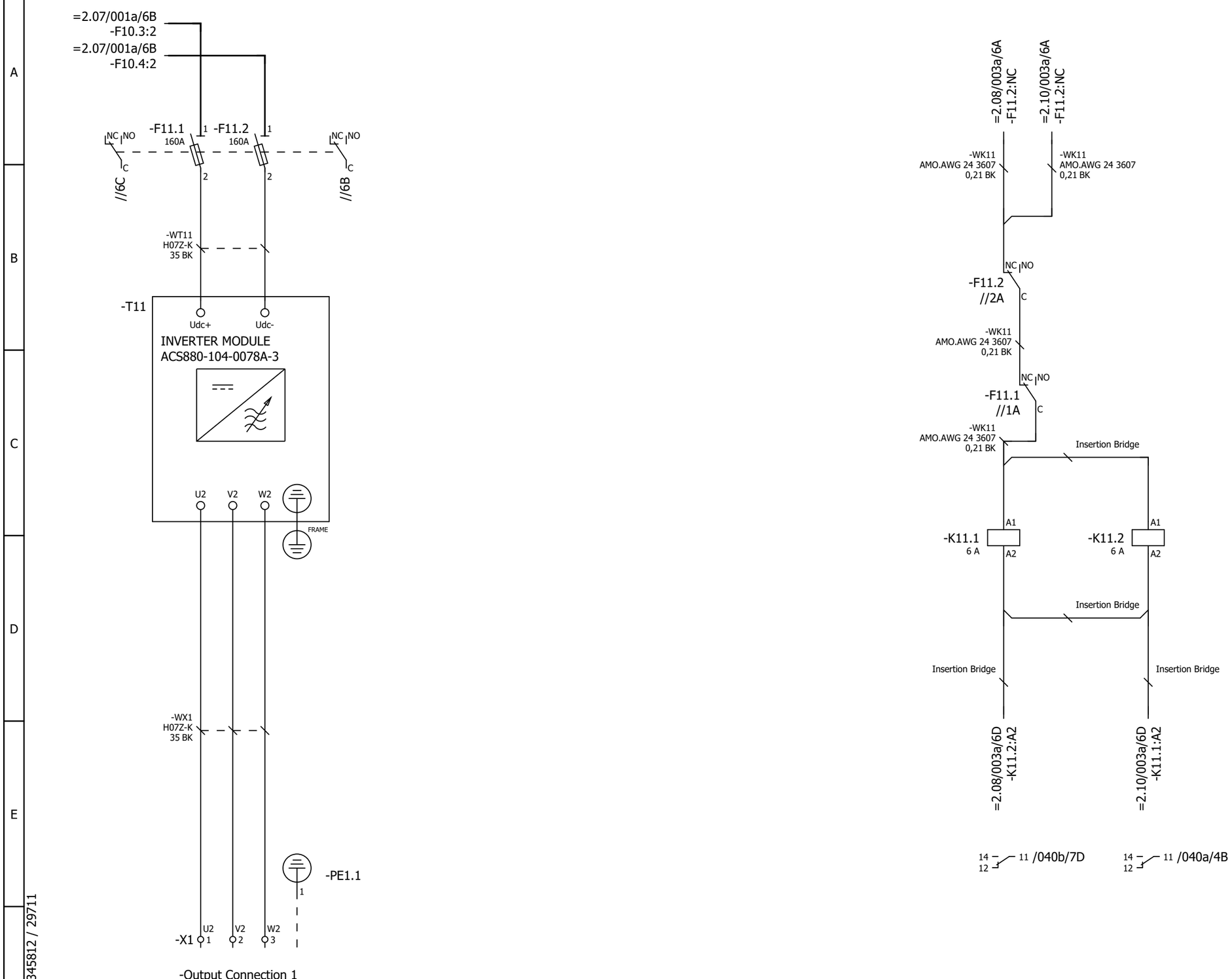

P345812 / 29711

Cust. Doc. No.	Prep. Sky-Xin Zhang 02.08.2023	Title MAIN CIRCUIT	Circuit diagram EFS2
Cust. Ref. No.	App.	INV2.09	SAP Doc. No.
Customer WMMP	Project Zhaka Jack-up Lift System	ACS880-107-0078A-3	EPLAN Doc. No. 3ABDC230674 - 2.09
	Zhaka Jack-up Lift System-1	400V	ABB Ref. No.
			Resp. Dept.

Item Des.
= 2.09
+ 2.07.1

Rev. .1 Sheet 003a
Cont. 040a

Control and status signals	Terminal	Pin
E-STOP FEEDBACK 1 - ESTOP ACTIVE	-XRO1	12
RUNNING 1 - RUNNING	-XRO2	22
FAULT (-1) 1 - NO FAULT	-XRO3	32

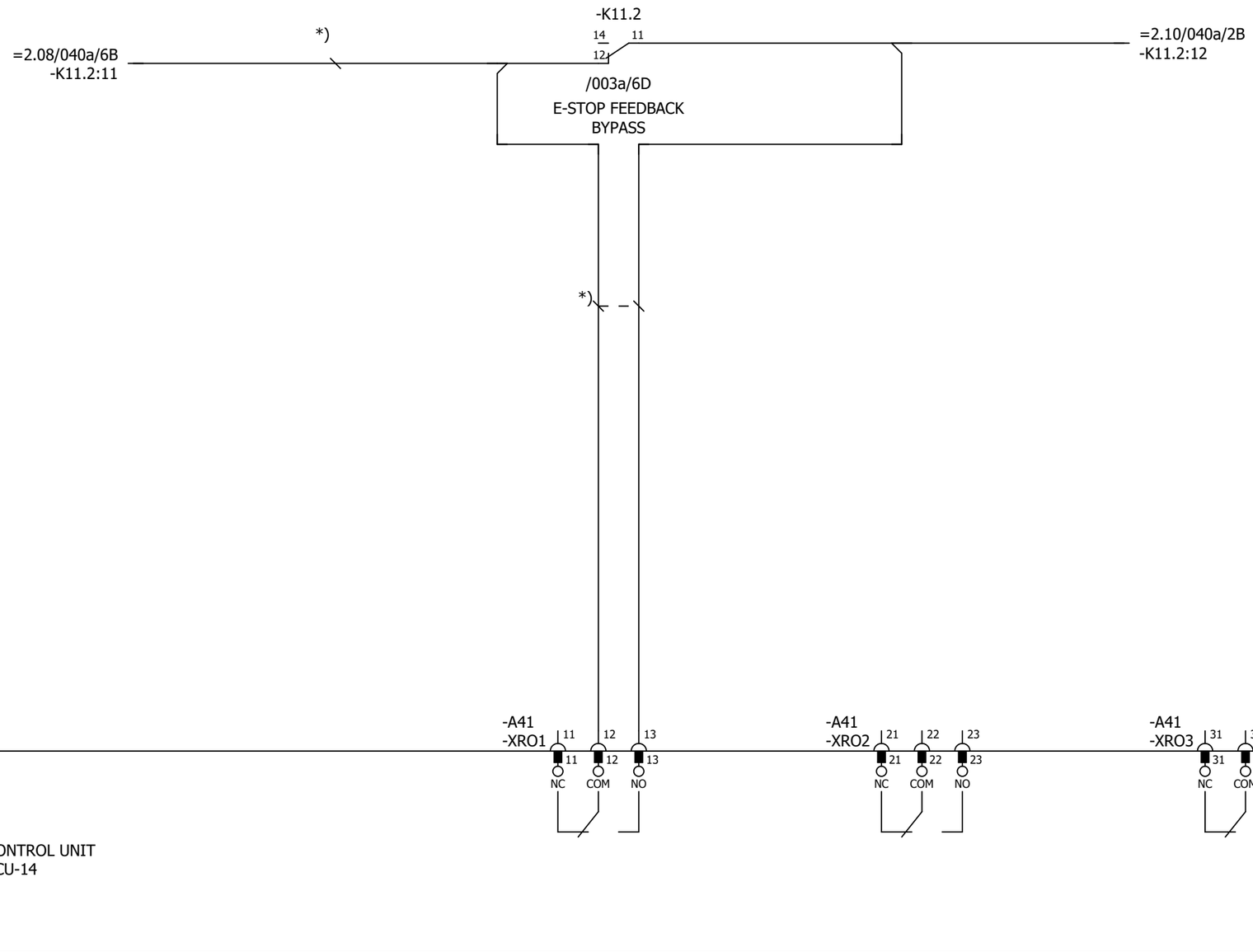

P345812 / 29711

Cust. Doc. No.	Prep. Sky-Xin Zhang 02.08.2023	Title CONTROL BOARD INV2.09 ACS880-107-0078A-3 400V	Circuit diagram EFS2
Cust. Ref. No.	App.		SAP Doc. No.
Customer WMMP	Project Zhaka Jack-up Lift System Zhaka Jack-up Lift System-1		EPLAN Doc. No. 3ABDC230674 - 2.09
			ABB Ref. No.
			Resp. Dept.

Item Des.
= 2.09
+ 2.07.1

Rev. .1 Sheet 040a
Cont. 040b

Control and status signals	Terminal	Pin
DIGITAL INTERLOCK	-XD24	1
START/STOP 1 - START	-XDI	1
FORWARD/REVERSE 1 - REVERSE	-XDI	2
RESET	-XDI	3
EMERGENCY STOP 0 - ACTIVE	-XDI	4
NOT SPECIFIED	-XDI	5
DI6 NOT IN USE	-XDI	6
OUTPUT: READY	-XDIO	1
OUTPUT: RUNNING	-XDIO	2

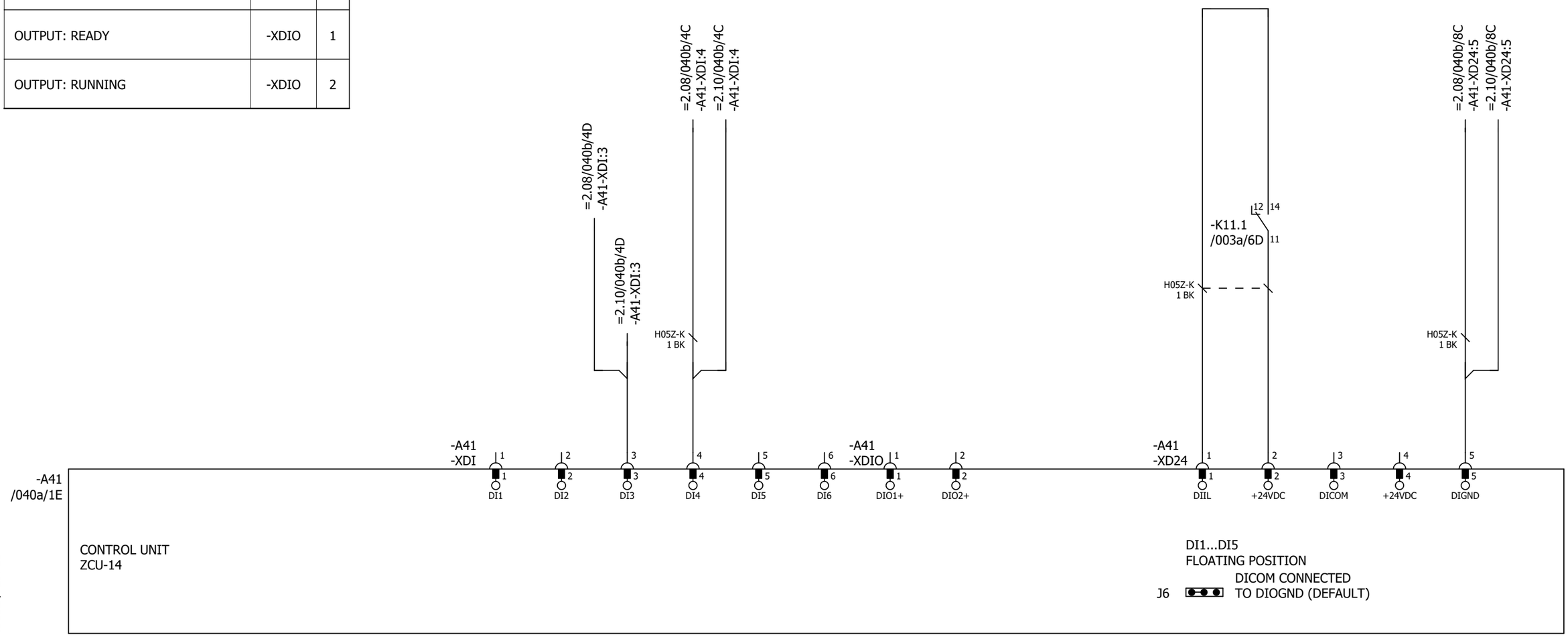

P345812 / 29711

Cust. Doc. No.	Prep. Sky-Xin Zhang 02.08.2023	Title CONTROL BOARD INV2.09 ACS880-107-0078A-3 400V	Circuit diagram EFS2
Cust. Ref. No.	App.		SAP Doc. No.
Customer WMMP	Project Zhaka Jack-up Lift System Zhaka Jack-up Lift System-1		EPLAN Doc. No. 3ABDC230674 - 2.09
			ABB Ref. No.
			Resp. Dept.

Item Des.
= 2.09
+ 2.07.1

Rev. .1 Sheet 040b
Cont. 040c

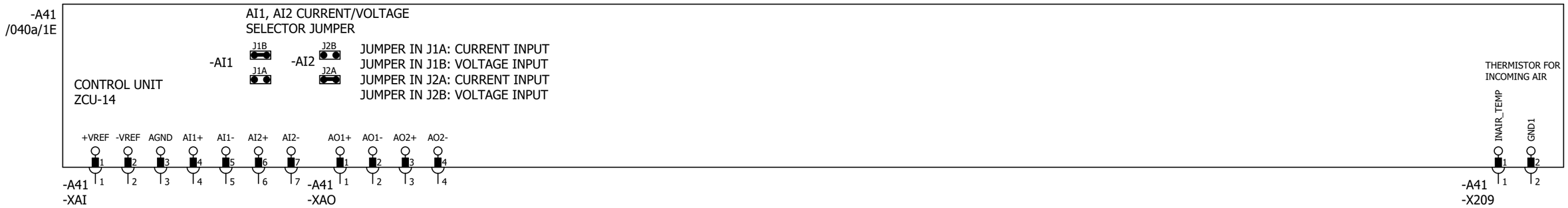

Control and status signals	Terminal	Pin
MOTOR TEMP. MONITORING 0(2)…10V	-XAI	4
AI2 NOT SPECIFIED BY DEFAULT NOT IN USE 0(4)…20mA	-XAI	6
CURR SOU MOT TEMP MONIT 0(4)...20mA	-XAO	1
CURRENT 0(4)…20mA ↔ 0(4)…MOTOR CURRENT	-XAO	3

P345812 / 29711

Cust. Doc. No.	Prep. Sky-Xin Zhang 02.08.2023	Title CONTROL BOARD INV2.09 ACS880-107-0078A-3 400V	Circuit diagram EFS2
Cust. Ref. No.	App.		SAP Doc. No.
Customer WMMP	Project Zhaka Jack-up Lift System Zhaka Jack-up Lift System-1		EPLAN Doc. No. 3ABDC230674 - 2.09
			ABB Ref. No.
			Resp. Dept.

Item Des.
= 2.09
+ 2.07.1

Rev. .1 Sheet 040c
Cont. 040d

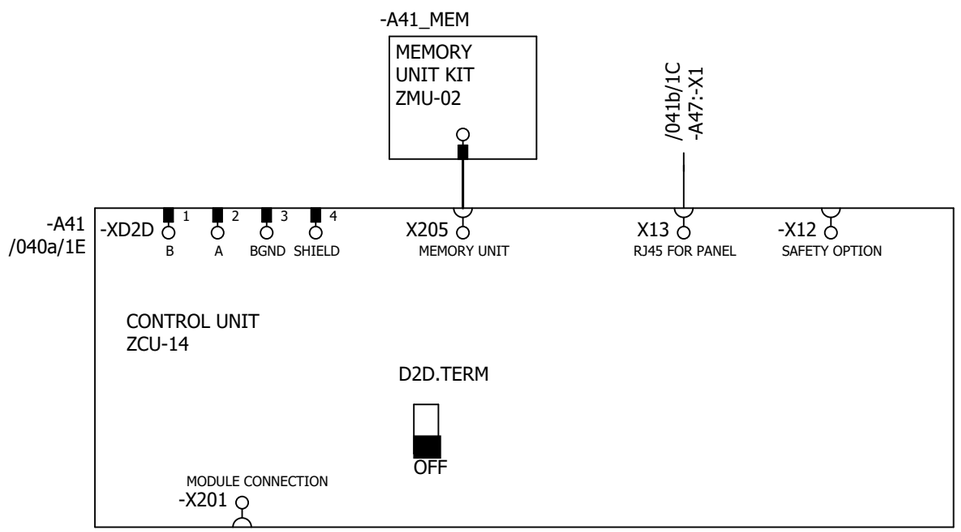

P345812 / 29711

Cust. Doc. No.	Prep. Sky-Xin Zhang 02.08.2023	Title CONTROL BOARD INV2.09 ACS880-107-0078A-3 400V	Circuit diagram EFS2
Cust. Ref. No.	App.		SAP Doc. No.
Customer WMMP	Project Zhaka Jack-up Lift System Zhaka Jack-up Lift System-1		EPLAN Doc. No. 3ABDC230674 - 2.09
			ABB Ref. No.
			Resp. Dept.

Item Des.	= 2.09 + 2.07.1
Rev. .1	Sheet 040d
Cont.	041a

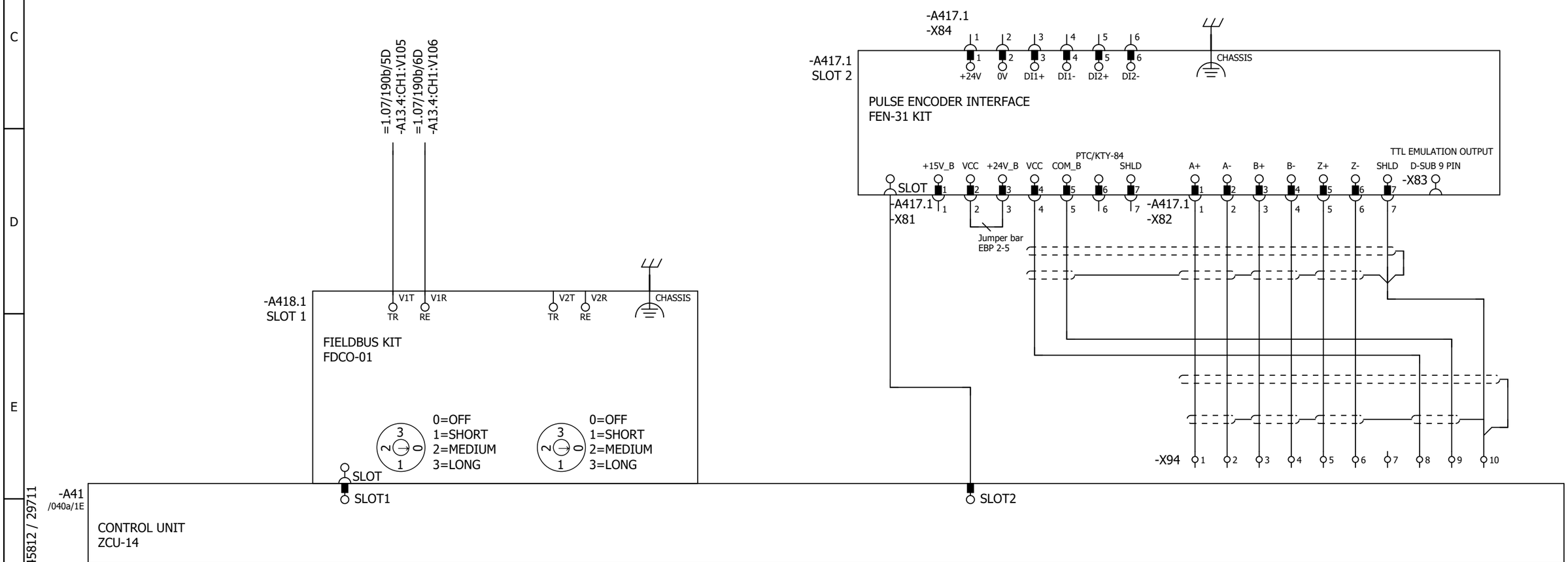

Cust. Doc. No.	Prep. Sky-Xin Zhang 02.08.2023	Title OPTION CARDS	Circuit diagram EFS2	Item Des.	
Cust. Ref. No.	App.	INV2.09	SAP Doc. No.	= 2.09	
Customer WMMP	Project Zhaka Jack-up Lift System	ACS880-107-0078A-3	EPLAN Doc. No. 3ABDC230674 - 2.09	+ 2.07.1	
	Zhaka Jack-up Lift System-1	400V	ABB Ref. No.	Rev. .1	Sheet 041a
			Resp. Dept.	Cont.	041b

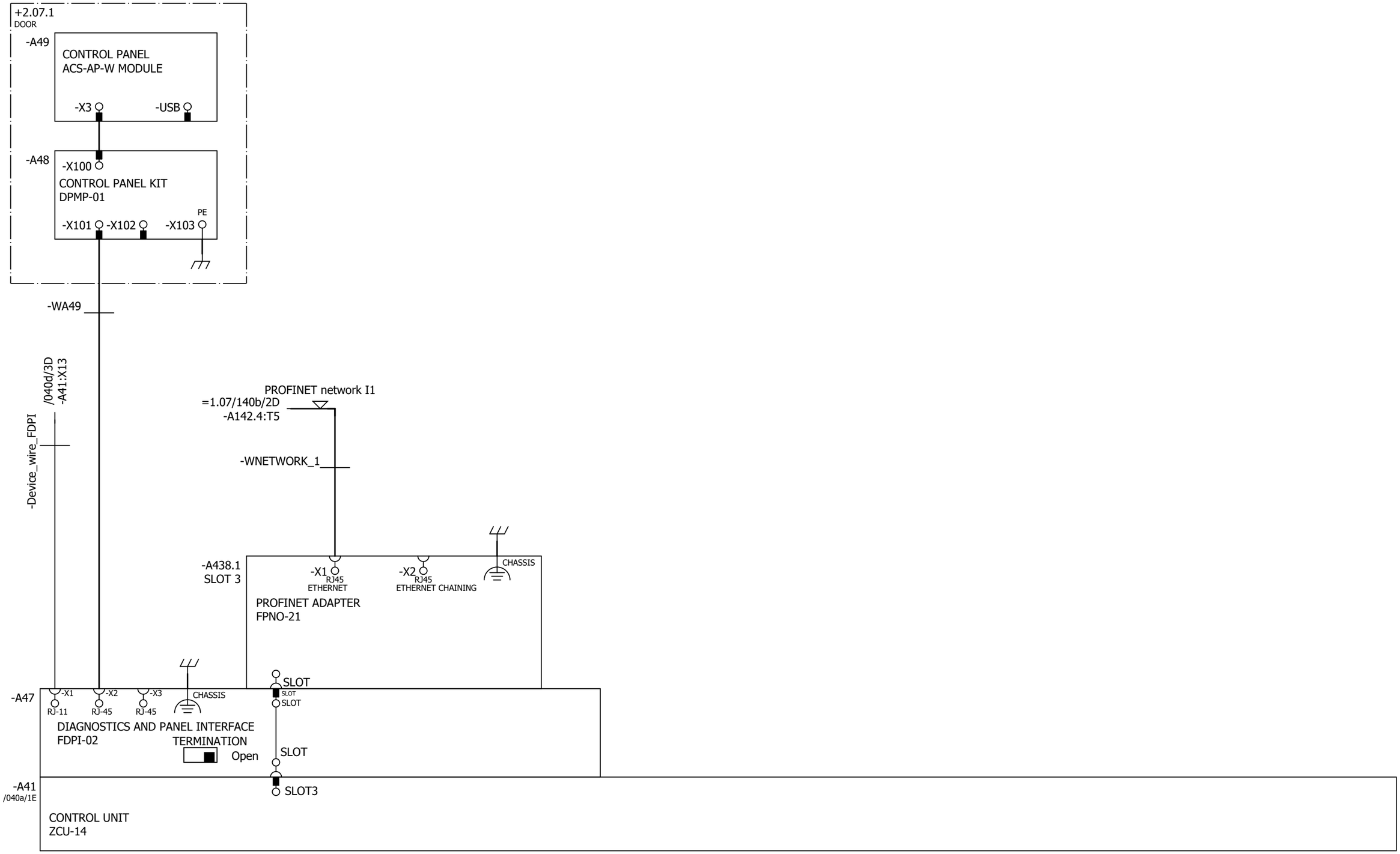

Cust. Doc. No.	Prep. Sky-Xin Zhang 02.08.2023	Title OPTION CARDS	Circuit diagram EFS2	Item Des.	
Cust. Ref. No.	App.	INV2.09	SAP Doc. No.	= 2.09	
Customer WMMP	Project Zhaka Jack-up Lift System	ACS880-107-0078A-3	EPLAN Doc. No. 3ABDC230674 - 2.09	+ 2.07.1	
		400V	ABB Ref. No.	Rev. .1	Sheet 041b
	Zhaka Jack-up Lift System-1		Resp. Dept.	Cont.	061a

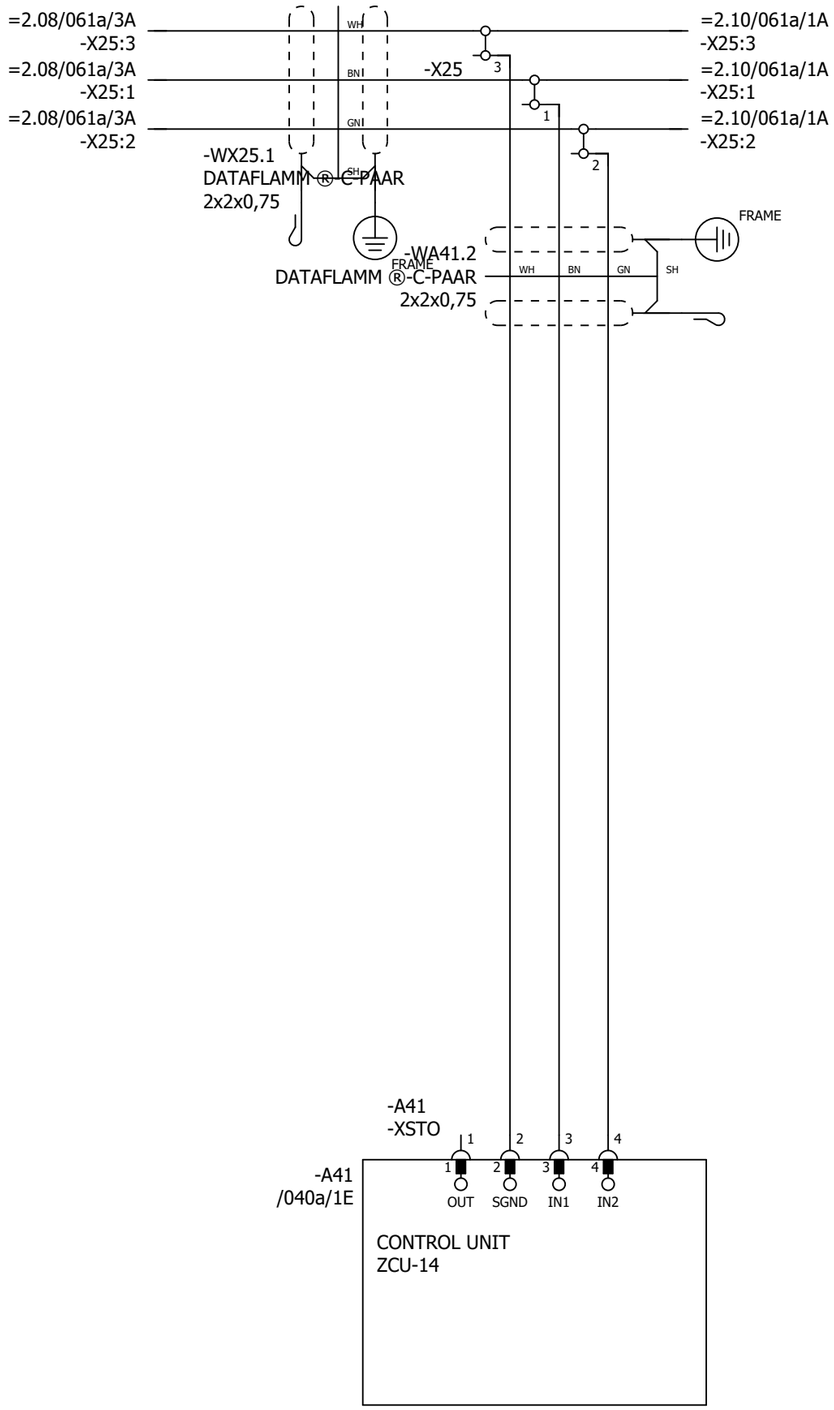

P345812 / 29711

SAFETY CIRCUIT
MACRO REVISION 6
RULES CONVERTED 19.7.2023

Cust. Doc. No.	Prep. Sky-Xin Zhang 02.08.2023	Title SAFETY CIRCUIT	Circuit diagram EFS2	Item Des.	
Cust. Ref. No.	App.	INV2.09	SAP Doc. No.	= 2.09	
Customer WMMP	Project Zhaka Jack-up Lift System	ACS880-107-0078A-3	EPLAN Doc. No. 3ABDC230674 - 2.09	+ 2.07.1	
	Zhaka Jack-up Lift System-1	400V	ABB Ref. No.	Rev. .1	Sheet 061a
			Resp. Dept.	Cont.	&MPC/Part list_1

Part list: 3ABDC230674DU02021

Item	Sort String	Qty.Str	Unit	Component Number	Description and text	Technical data
0010		1.000	ST		ACS880-107-0078A-3+A012+B053+C121+C132+	
0020		1.000	ST		_C206+E210+F272+F287+F288+G300+G307+G315	
0030		1.000	ST		_+G320+G330+G344+H352+H367+J400+K492+L50	
0040		1.000	ST		_2+L503+P913+Q964	
0050		1.000	ST		=2.09	
0060		1.000	ST		+2.07.1,INU3	
0070		1.000	ST		Powerconversionequipment	
0080	-A41_MEM	1.000	PC	3AXD50000006010	MEMORY UNIT KIT ZMU-02	
0090	-T11	1.000	PC	3AUA0000120009-M	ACS880-104-0078A-3+P922	+P922
0100	SCREW	1.000	PC	3AFE68681481	SCREW K30X10 TORX	PT WN1452 ZN
0110	SOFTWARE	1.000	PC	3AUA0000153462	SOFTWARE PRIMARY CONTROL PROGRA	AINF6 FOR ZCU-12/14
0120		1.000	ST		R4imoduleDCfuse	
0130	-F11.1-2	2.000	PC	3AXD50000000219	FUSE FR27UQ69V160T/160A	6.921 CP URQ 27X60MM FERRULE;AR
0140		1.000	ST		R3i-R4imoduleDCfusebase	
0150	(-F11.1-2)	2.000	PC	3AUA0000089227	FUSE HOLDER FUSE BASE US271MI 150A	FUSE BASE US271MI 150A 800V
0160		1.000	ST		motorterminalR4i,coppercable	
0170	-X1	1.000	PC	3ABD50000000270	CONNECTOR PPAC-50	50 MM2;150 A;800V
0180	-X1	1.000	PC	3ABD50000000270	CONNECTOR PPAC-50	50 MM2;150 A;800V
0190	-X1	1.000	PC	3ABD50000000270	CONNECTOR PPAC-50	50 MM2;150 A;800V
0200		1.000	ST		24VDCsupplyZCU	
0210	-WA41_1	1.000	PC	3AXD50000005218	WIRE HARNESS 24VDC SUPPLY X51 ZCU V	HALOGEN FREE;X51_A51
0220		1.000	ST		Rooffancontrol	
0230	-WA41_3	1.000	PC	3AXD50000002688	WIRE HARNESS FAN CONTROL MAIN WIRE	HALOGEN FREE;X208_X26.3
0240		1.000	ST		Toprowmodulewireharness	
0250	-WT11	1.000	PC	3AXD50000002256	WIRE HARNESS R4I FUSE_MODULE V2	HALOGEN FREE;MAIN CIRCUIT WIRE SET
0260	-WX1	1.000	PC	3AXD50000002258	WIRE HARNESS R4I MODULE_OUTPUT TR V	HALOGEN FREE;MAIN CIRCUIT WIRE SET
0270		1.000	ST		Encoder	
0280	-A417.1	1.000	PC	3AFE68978955	COMMUNIC. ADAPTER FEN-31	FEN-31
0290		1.000	ST		Optionmodule	
0300	-A418.1	1.000	PC	3AUA0000107392	COMMUNIC. ADAPTER FDCO-01	
0310		1.000	ST		Controlpanel	
0320	-A47	1.000	PC	3AUA0000108650	FIELDBUS KIT FDPI-02	PANEL BUS ADAPTER
0330	-A48	1.000	PC	3AUA0000108878	CONTROL PANEL KIT DPMP-01	DPMP-01

P345812 / 29711

Cust. Doc. No.	Prep.	Title PART LIST INV2.09 ACS880-107-0078A-3 400V	Item Des. = 2.09 +
Cust. Ref. No.	App.		SAP Doc. No.
Customer WMMP	Project Zhaka Jack-up Lift System Zhaka Jack-up Lift System-1		EPLAN Doc. No. 3ABDC230674 - 2.09
			ABB Ref. No. / Rev. / Sheet Part list_1
			Resp. Dept. / Cont. Part list_2

Part list: 3ABDC230674DU02021

Item	Sort String	Qty.Str	Unit	Component Number	Description and text	Technical data
0340	-A49	1.000	PC	3AXD50000025964	CONTROL PANEL ACS-AP-W MODULE	ASSISTANT PANEL WIRELESS CPU1
0350		1.000	ST		DCfusesupervision	
0360	-K11.1-2	2.000	PC	3AXD50000021313	RELAY DEK_REL_G24/21	250 V;6 A;COIL 24VDC
0370		1.000	ST		FieldBus	
0380	-A438.1	1.000	PC	3AXD50000192779	OPTION MODULE FPNO-21	PROFINET IO
0390		1.000	ST		Supplementtorelay	
0400	(-K11.1)	1.000	PC	3AXD50000021312	TERMINAL BLOCK ST EB2_DIK_RD 2716693	2POLE, 6,15 MM PITCH;FOR DEK RELAYS

P345812 / 29711

Cust. Doc. No.	Prep.	Title PART LIST INV2.09 ACS880-107-0078A-3 400V	Item Des. = 2.09 +
Cust. Ref. No.	App.		SAP Doc. No.
Customer WMMP	Project Zhaka Jack-up Lift System Zhaka Jack-up Lift System-1		EPLAN Doc. No. 3ABDC230674 - 2.09
			ABB Ref. No. / Rev. / Sheet Part list_2
			Resp. Dept. / Cont. &EMA/1

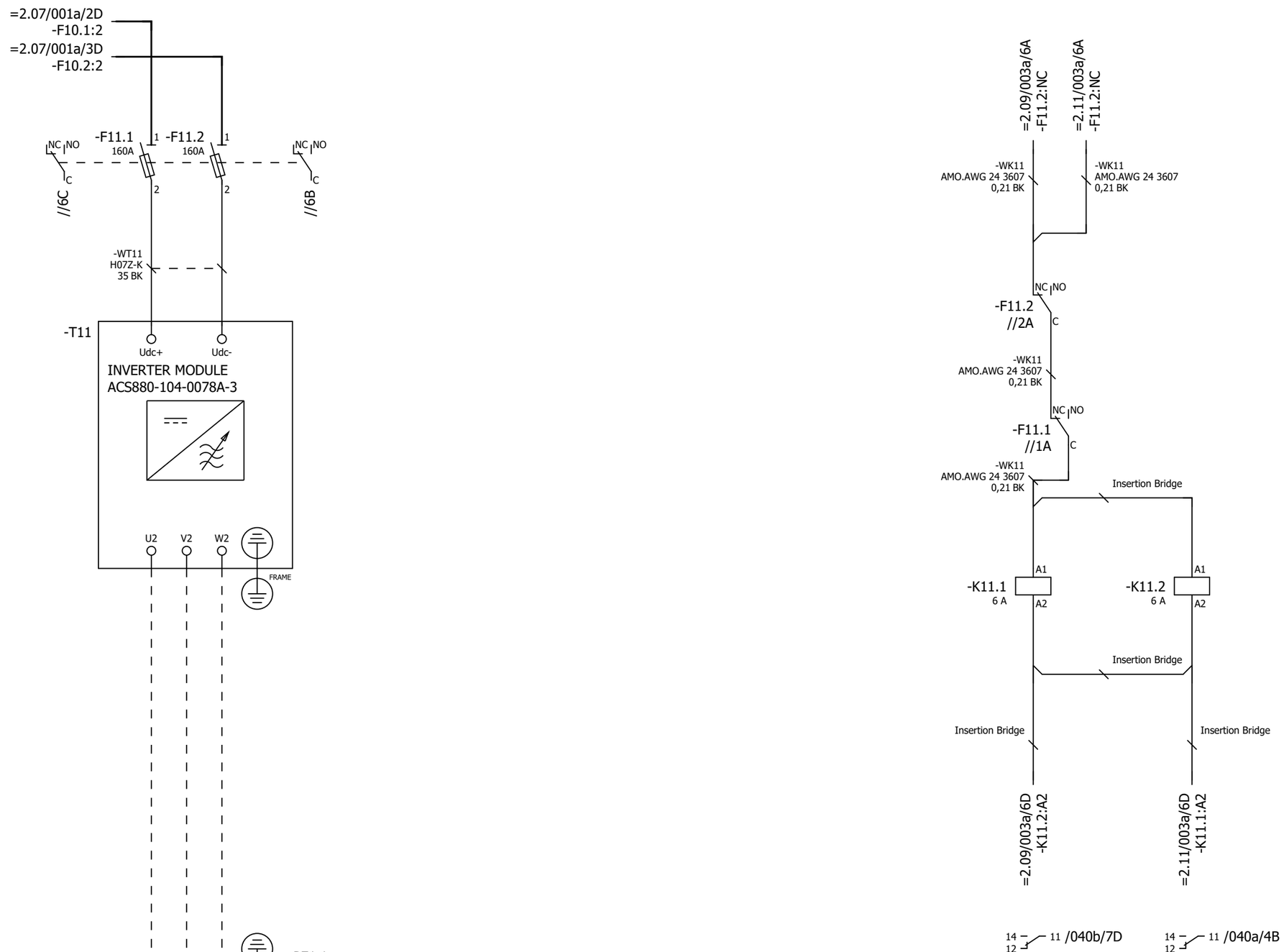

P345812 / 29711

Cust. Doc. No.	Prep. Sky-Xin Zhang 02.08.2023	Title MAIN CIRCUIT	Circuit diagram EFS2
Cust. Ref. No.	App.	INV2.10	SAP Doc. No.
Customer WMMP	Project Zhaka Jack-up Lift System	ACS880-107-0078A-3	EPLAN Doc. No. 3ABDC230674 - 2.10
	Zhaka Jack-up Lift System-1	400V	ABB Ref. No.
			Resp. Dept.

Item Des.
= 2.10
+ 2.07.1

Rev. .1 Sheet 003a
Cont. 040a

Control and status signals	Terminal	Pin
E-STOP FEEDBACK 1 - ESTOP ACTIVE	-XRO1	12
RUNNING 1 - RUNNING	-XRO2	22
FAULT (-1) 1 - NO FAULT	-XRO3	32

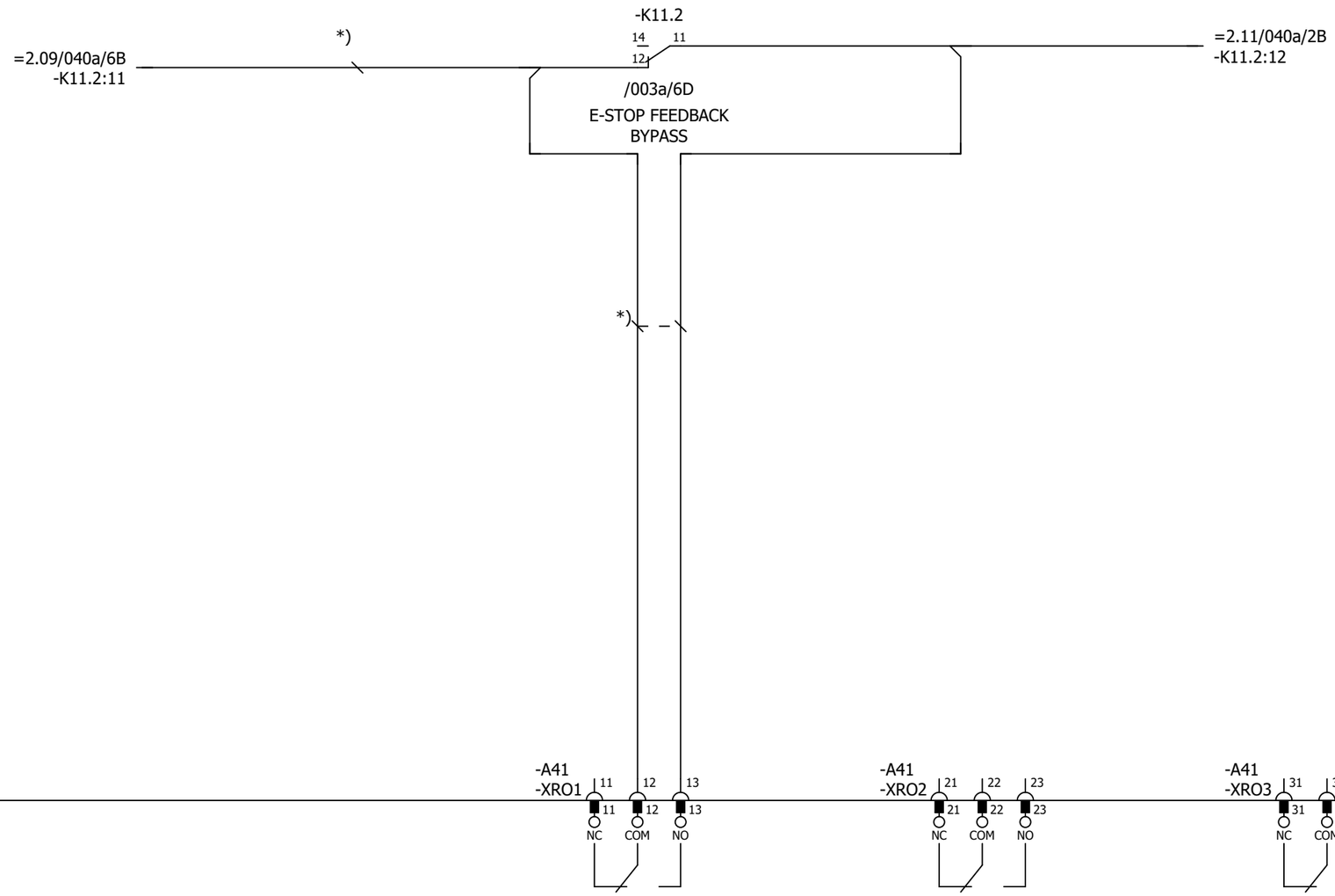

Cust. Doc. No.	Prep. Sky-Xin Zhang 02.08.2023	Title CONTROL BOARD INV2.10 ACS880-107-0078A-3 400V	Circuit diagram EFS2
Cust. Ref. No.	App.		SAP Doc. No.
Customer WMMP	Project Zhaka Jack-up Lift System Zhaka Jack-up Lift System-1		EPLAN Doc. No. 3ABDC230674 - 2.10
			ABB Ref. No.
			Resp. Dept.

Item Des.
= 2.10
+ 2.07.1

Rev. .1 Sheet 040a
Cont. 040b

Control and status signals	Terminal	Pin
DIGITAL INTERLOCK	-XD24	1
START/STOP 1 - START	-XDI	1
FORWARD/REVERSE 1 - REVERSE	-XDI	2
RESET	-XDI	3
EMERGENCY STOP 0 - ACTIVE	-XDI	4
NOT SPECIFIED	-XDI	5
DI6 NOT IN USE	-XDI	6
OUTPUT: READY	-XDIO	1
OUTPUT: RUNNING	-XDIO	2

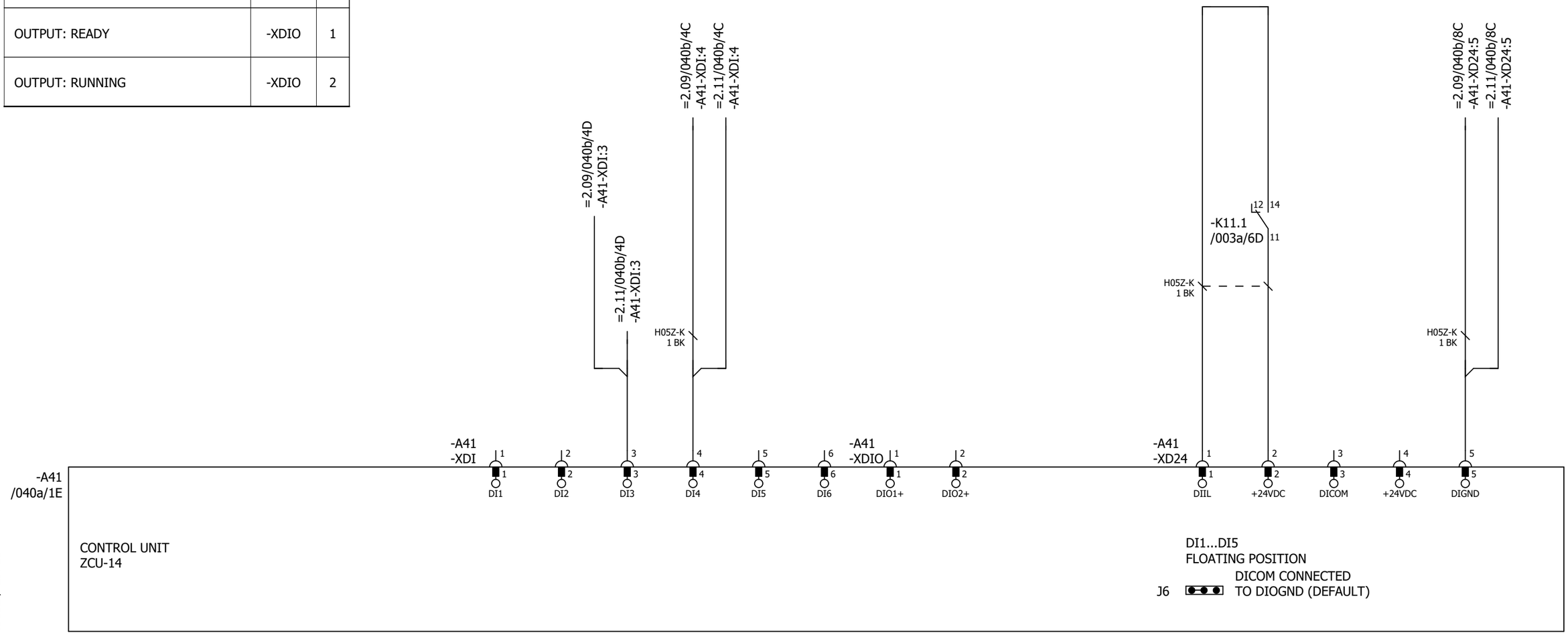

P345812 / 29711

Cust. Doc. No.	Prep. Sky-Xin Zhang 02.08.2023	Title CONTROL BOARD INV2.10 ACS880-107-0078A-3 400V	Circuit diagram EFS2
Cust. Ref. No.	App.		SAP Doc. No.
Customer WMMP	Project Zhaka Jack-up Lift System Zhaka Jack-up Lift System-1		EPLAN Doc. No. 3ABDC230674 - 2.10
			ABB Ref. No.
			Resp. Dept.

Item Des. = 2.10 + 2.07.1

Rev. .1 Sheet 040b

Cont. 040c

Control and status signals	Terminal	Pin
MOTOR TEMP. MONITORING 0(2)…10V	-XAI	4
AI2 NOT SPECIFIED BY DEFAULT NOT IN USE 0(4)…20mA	-XAI	6
CURR SOU MOT TEMP MONIT 0(4)...20mA	-XAO	1
CURRENT 0(4)…20mA ↔ 0(4)…MOTOR CURRENT	-XAO	3

P345812 / 29711

Cust. Doc. No.	Prep. Sky-Xin Zhang 02.08.2023	Title CONTROL BOARD INV2.10 ACS880-107-0078A-3 400V	Circuit diagram EFS2
Cust. Ref. No.	App.		SAP Doc. No.
Customer WMMP	Project Zhaka Jack-up Lift System Zhaka Jack-up Lift System-1		EPLAN Doc. No. 3ABDC230674 - 2.10
			ABB Ref. No.
			Resp. Dept.

Item Des.
= 2.10
+ 2.07.1

Rev. .1 Sheet 040c
Cont. 040d

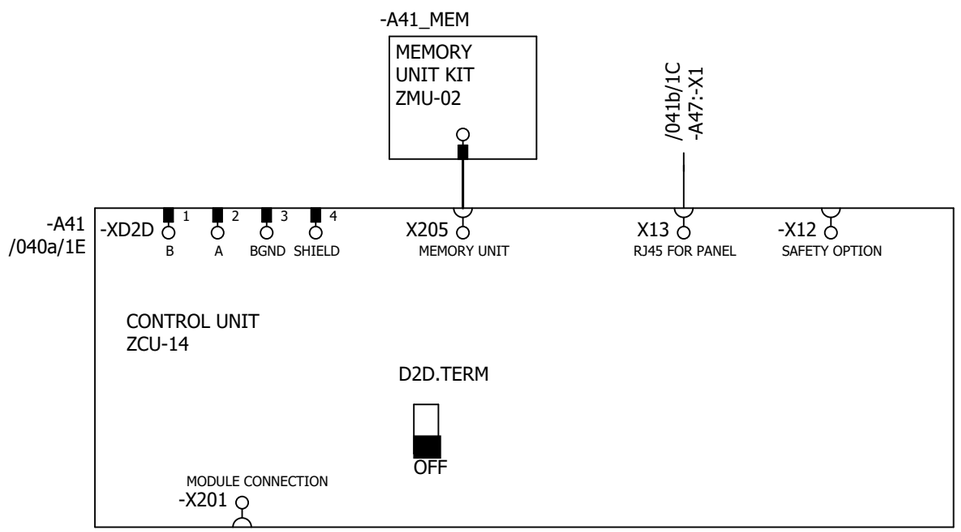

P345812 / 29711

Cust. Doc. No.	Prep. Sky-Xin Zhang 02.08.2023	Title CONTROL BOARD INV2.10 ACS880-107-0078A-3 400V	Circuit diagram EFS2
Cust. Ref. No.	App.		SAP Doc. No.
Customer WMMP	Project Zhaka Jack-up Lift System Zhaka Jack-up Lift System-1		EPLAN Doc. No. 3ABDC230674 - 2.10
			ABB Ref. No.
			Resp. Dept.

Item Des.	= 2.10 + 2.07.1
Rev. .1	Sheet 040d
Cont.	041a

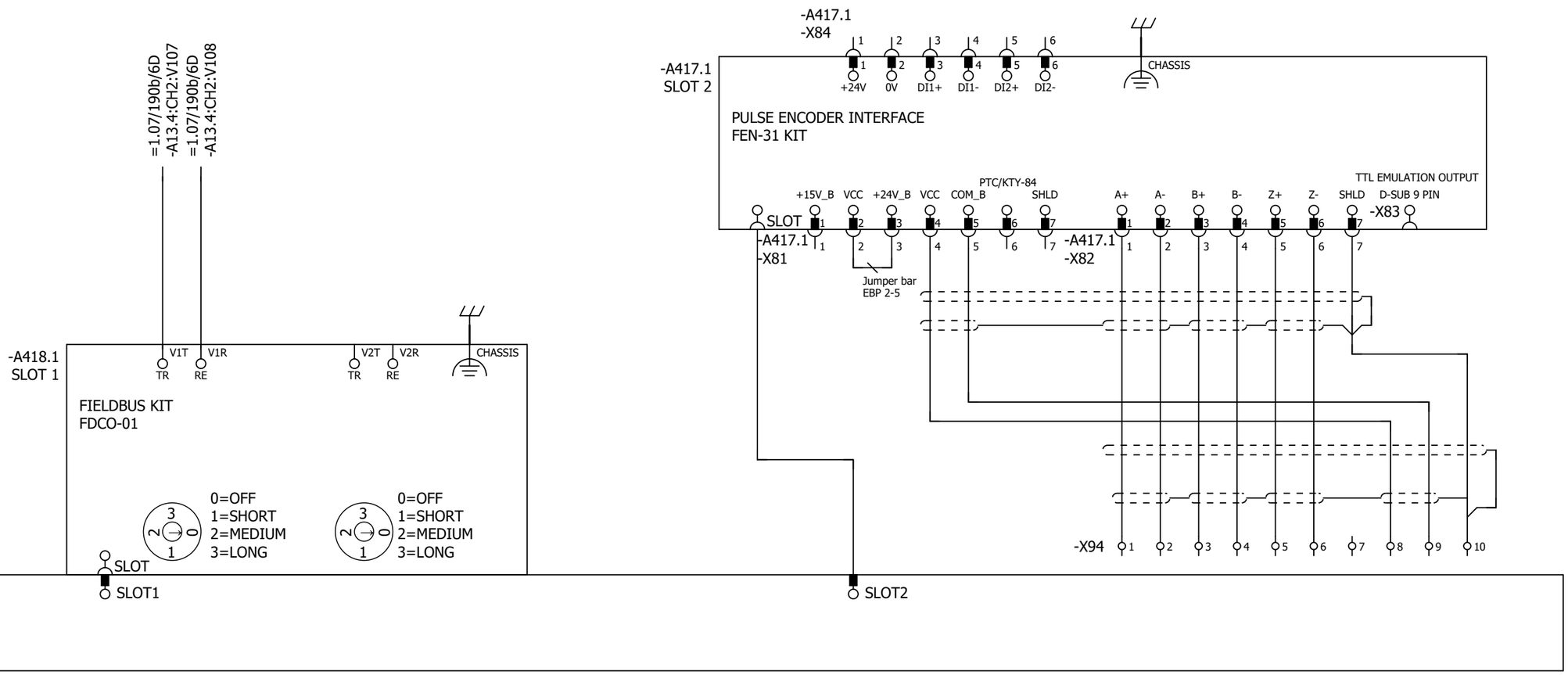

Cust. Doc. No.	Prep. Sky-Xin Zhang 02.08.2023	Title OPTION CARDS	Circuit diagram EFS2	Item Des.	
Cust. Ref. No.	App.	INV2.10	SAP Doc. No.	= 2.10	
Customer WMMP	Project Zhaka Jack-up Lift System	ACS880-107-0078A-3	EPLAN Doc. No. 3ABDC230674 - 2.10	+ 2.07.1	
	Zhaka Jack-up Lift System-1	400V	ABB Ref. No.	Rev. .1	Sheet 041a
			Resp. Dept.	Cont.	041b

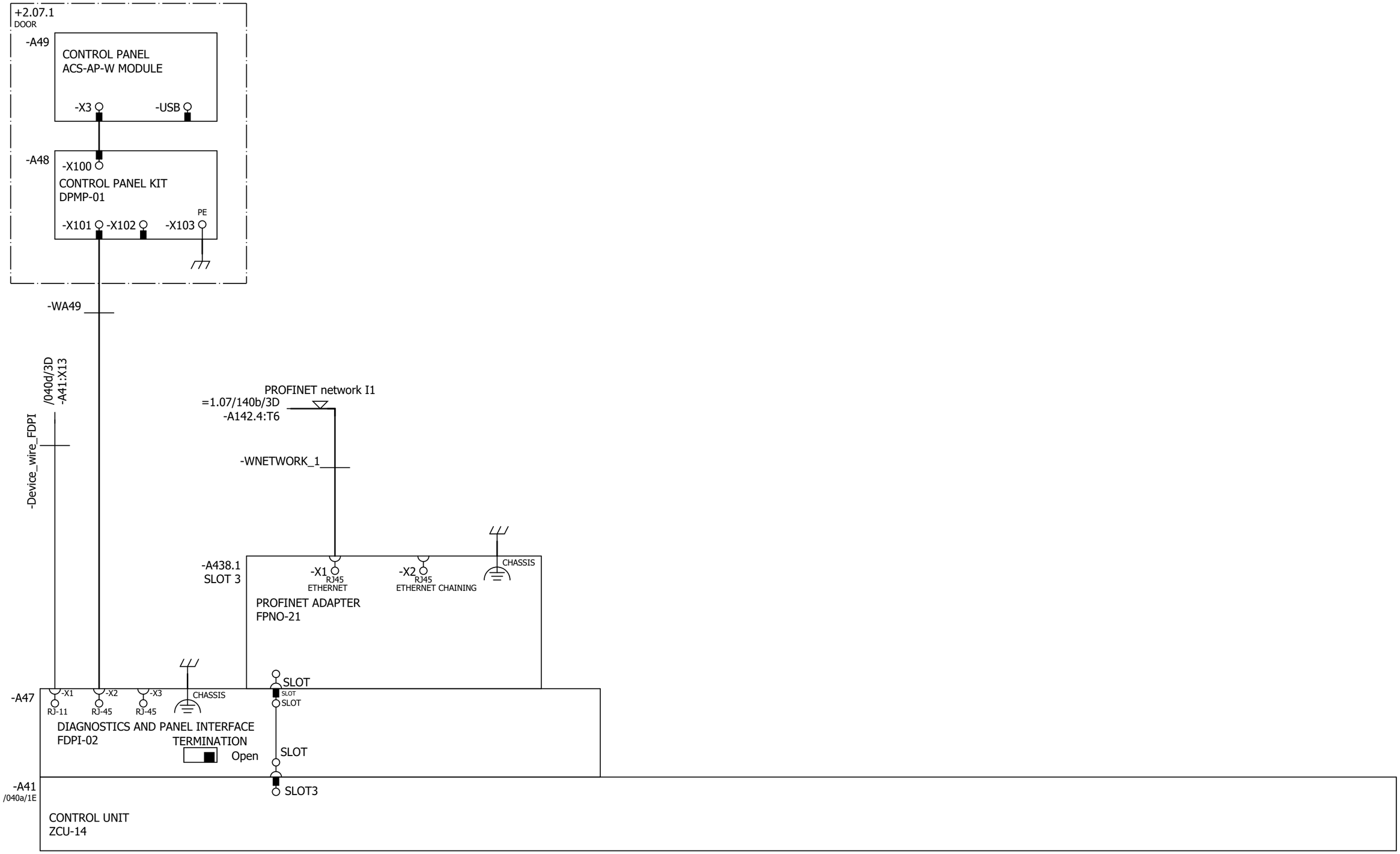

Cust. Doc. No.	Prep. Sky-Xin Zhang 02.08.2023	Title OPTION CARDS	Circuit diagram EFS2	Item Des.	
Cust. Ref. No.	App.	INV2.10	SAP Doc. No.	= 2.10	
Customer WMMP	Project Zhaka Jack-up Lift System	ACS880-107-0078A-3	EPLAN Doc. No. 3ABDC230674 - 2.10	+ 2.07.1	
		400V	ABB Ref. No.	Rev. .1	Sheet 041b
	Zhaka Jack-up Lift System-1		Resp. Dept.	Cont.	061a

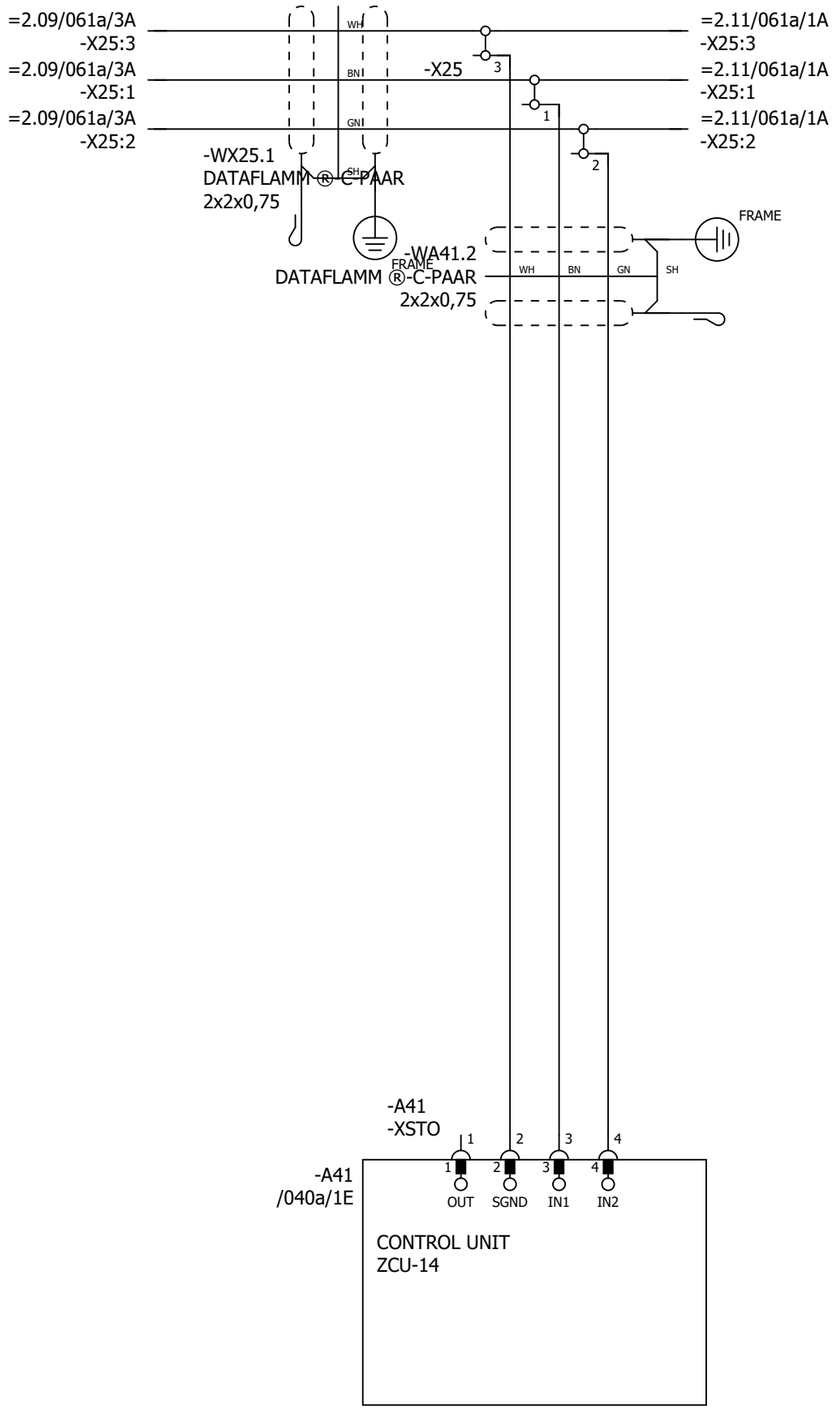

P345812 / 29711

SAFETY CIRCUIT
MACRO REVISION 6
RULES CONVERTED 19.7.2023

Cust. Doc. No.	Prep. Sky-Xin Zhang 02.08.2023	Title SAFETY CIRCUIT	Circuit diagram EFS2	Item Des.	
Cust. Ref. No.	App.	INV2.10	SAP Doc. No.	= 2.10	
Customer WMMP	Project Zhaka Jack-up Lift System	ACS880-107-0078A-3	EPLAN Doc. No. 3ABDC230674 - 2.10	+ 2.07.1	
	Zhaka Jack-up Lift System-1	400V	ABB Ref. No.	Rev. .1	Sheet 061a
			Resp. Dept.	Cont.	&MPC/Part list_1

Part list: 3ABDC230674DU02022

Item	Sort String	Qty.Str	Unit	Component Number	Description and text	Technical data
0010		1.000	ST		ACS880-107-0078A-3+A012+B053+C121+C132+	
0020		1.000	ST		_C206+E210+F272+F287+F288+G300+G307+G315	
0030		1.000	ST		_+G320+G330+G344+H352+H367+J400+K492+L50	
0040		1.000	ST		_2+L503+P913+Q964	
0050		1.000	ST		=2.10	
0060		1.000	ST		+2.07.1,INU3	
0070		1.000	ST		Powerconversionequipment	
0080	-A41_MEM	1.000	PC	3AXD50000006010	MEMORY UNIT KIT ZMU-02	
0090	-T11	1.000	PC	3AUA0000120009-M	ACS880-104-0078A-3+P922	+P922
0100	SCREW	1.000	PC	3AFE68681481	SCREW K30X10 TORX	PT WN1452 ZN
0110	SOFTWARE	1.000	PC	3AUA0000153462	SOFTWARE PRIMARY CONTROL PROGRA	AINF6 FOR ZCU-12/14
0120		1.000	ST		R4imoduleDCfuse	
0130	-F11.1-2	2.000	PC	3AXD50000000219	FUSE FR27UQ69V160T/160A	6.921 CP URQ 27X60MM FERRULE;AR
0140		1.000	ST		R3i-R4imoduleDCfusebase	
0150	(-F11.1-2)	2.000	PC	3AUA0000089227	FUSE HOLDER FUSE BASE US271MI 150A	FUSE BASE US271MI 150A 800V
0160		1.000	ST		24VDCsupplyZCU	
0170	-WA41_1	1.000	PC	3AXD50000005218	WIRE HARNESS 24VDC SUPPLY X51 ZCU V	HALOGEN FREE;X51_A51
0180		1.000	ST		Rooffancontrol	
0190	-WA41_3	1.000	PC	3AXD50000002688	WIRE HARNESS FAN CONTROL MAIN WIRE	HALOGEN FREE;X208_X26.3
0200		1.000	ST		Bottomrowmodulewireharness	
0210	-WT11	1.000	PC	3AXD50000002418	WIRE HARNESS R4I FUSE_MODULE BR V2	HALOGEN FREE;MAIN CIRCUIT WIRE SET
0220		1.000	ST		Encoder	
0230	-A417.1	1.000	PC	3AFE68978955	COMMUNIC. ADAPTER FEN-31	FEN-31
0240		1.000	ST		Optionmodule	
0250	-A418.1	1.000	PC	3AUA0000107392	COMMUNIC. ADAPTER FDCO-01	
0260		1.000	ST		Controlpanel	
0270	-A47	1.000	PC	3AUA0000108650	FIELDBUS KIT FDPI-02	PANEL BUS ADAPTER
0280	-A48	1.000	PC	3AUA0000108878	CONTROL PANEL KIT DPMP-01	DPMP-01
0290	-A49	1.000	PC	3AXD50000025964	CONTROL PANEL ACS-AP-W MODULE	ASSISTANT PANEL WIRELESS CPU1
0300		1.000	ST		DCfusesupervision	
0310	-K11.1-2	2.000	PC	3AXD50000021313	RELAY DEK_REL_G24/21	250 V;6 A;COIL 24VDC
0320		1.000	ST		FieldBus	
0330	-A438.1	1.000	PC	3AXD50000192779	OPTION MODULE FPNO-21	PROFINET IO

P345812 / 29711

Cust. Doc. No.	Prep.	Title PART LIST INV2.10 ACS880-107-0078A-3 400V	Item Des. = 2.10 +
Cust. Ref. No.	App.		SAP Doc. No.
Customer WMMP	Project Zhaka Jack-up Lift System Zhaka Jack-up Lift System-1		EPLAN Doc. No. 3ABDC230674 - 2.10
			ABB Ref. No. / Rev. / Sheet Part list_1
			Resp. Dept. / Cont. Part list_2

Part list: 3ABDC230674DU02022

Item	Sort String	Qty.Str	Unit	Component Number	Description and text	Technical data
0340		1.000	ST		Supplementtorelay	
0350	(-K11.1)	1.000	PC	3AXD50000021312	TERMINAL BLOCK ST EB2_DIK_RD 2716693	2POLE, 6,15 MM PITCH;FOR DEK RELAYS

P345812 / 29711

Cust. Doc. No.	Prep.	Title PART LIST INV2.10 ACS880-107-0078A-3 400V	Item Des. = 2.10 +
Cust. Ref. No.	App.		SAP Doc. No.
Customer WMMP	Project Zhaka Jack-up Lift System Zhaka Jack-up Lift System-1		EPLAN Doc. No. 3ABDC230674 - 2.10
			ABB Ref. No. / Rev. / Sheet Part list_2
			Resp. Dept. / Cont. &EMA/1

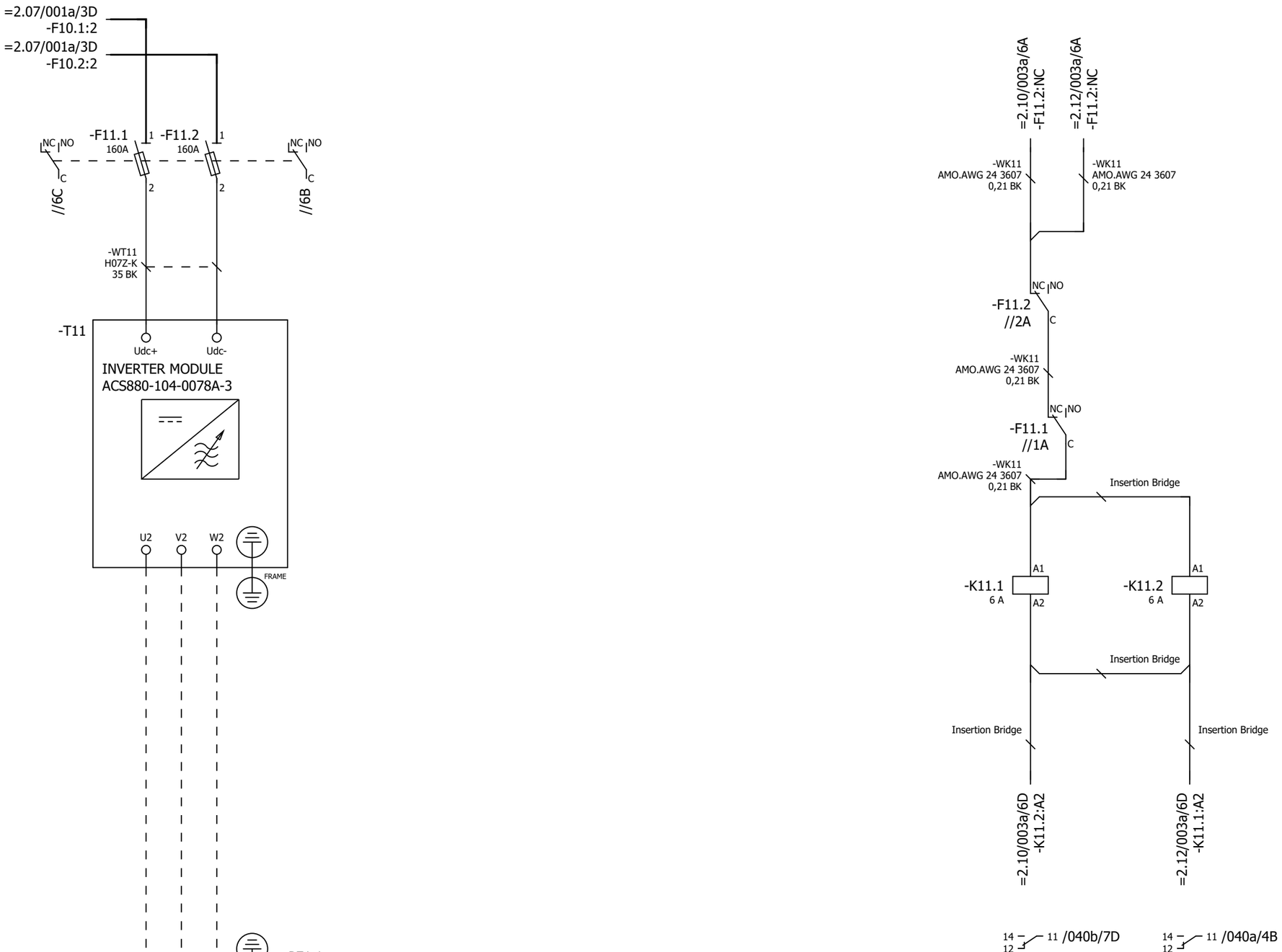

P345812 / 29711

Cust. Doc. No.	Prep. Sky-Xin Zhang 02.08.2023	Title MAIN CIRCUIT	Circuit diagram EFS2
Cust. Ref. No.	App.	INV2.11	SAP Doc. No.
Customer WMMP	Project Zhaka Jack-up Lift System	ACS880-107-0078A-3	EPLAN Doc. No. 3ABDC230674 - 2.11
	Zhaka Jack-up Lift System-1	400V	ABB Ref. No.
			Resp. Dept.

Item Des.
= 2.11
+ 2.07.1

Rev. .1 Sheet 003a
Cont. 040a

Control and status signals	Terminal	Pin
E-STOP FEEDBACK 1 - ESTOP ACTIVE	-XRO1	12
RUNNING 1 - RUNNING	-XRO2	22
FAULT (-1) 1 - NO FAULT	-XRO3	32

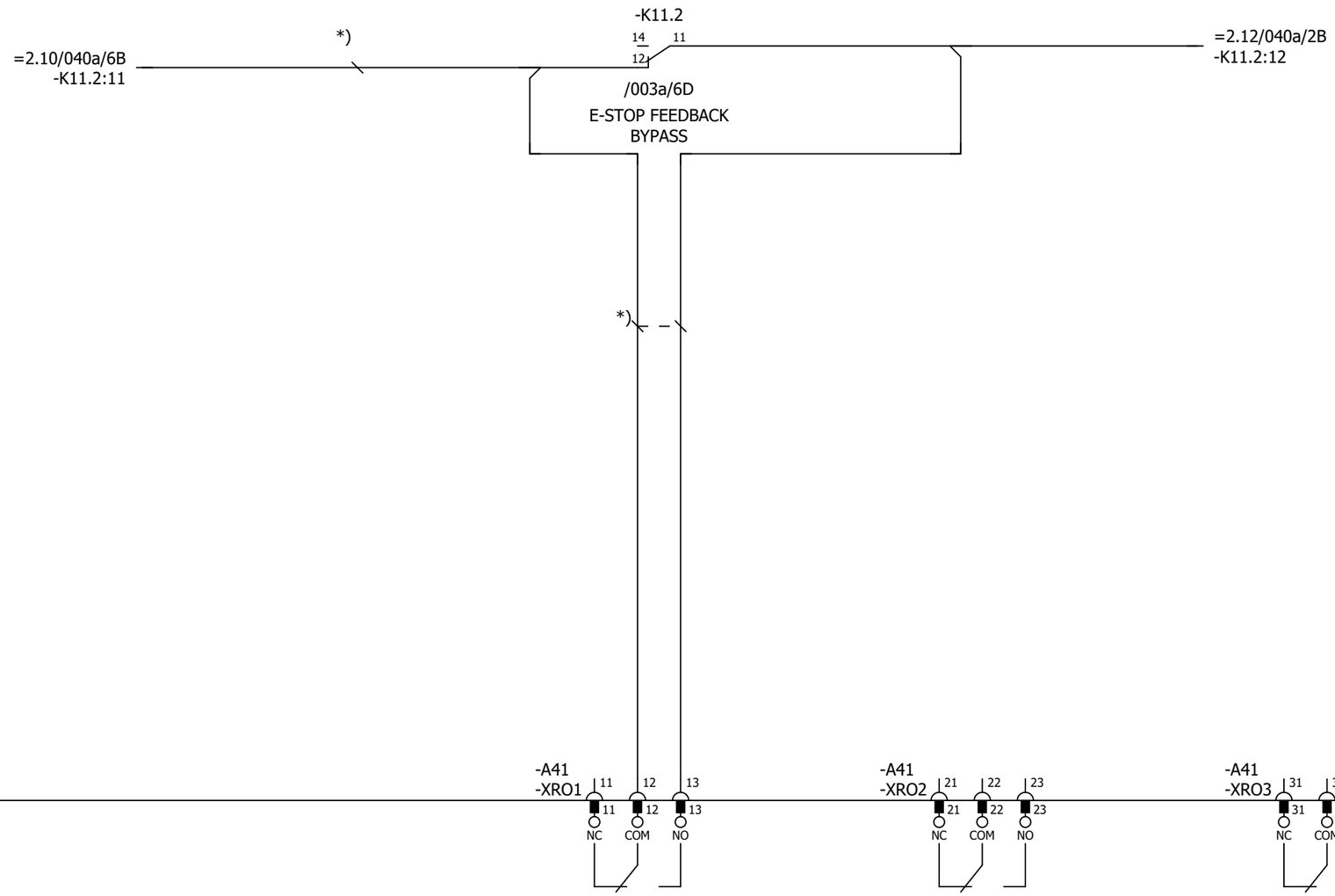

P345812 / 29711

Cust. Doc. No.	Prep. Sky-Xin Zhang 02.08.2023	Title CONTROL BOARD INV2.11 ACS880-107-0078A-3 400V	Circuit diagram EFS2
Cust. Ref. No.	App.		SAP Doc. No.
Customer WMMP	Project Zhaka Jack-up Lift System Zhaka Jack-up Lift System-1		EPLAN Doc. No. 3ABDC230674 - 2.11
			ABB Ref. No.
			Resp. Dept.

Item Des.
= 2.11
+ 2.07.1

Rev. .1 Sheet 040a
Cont. 040b

Control and status signals	Terminal	Pin
DIGITAL INTERLOCK	-XD24	1
START/STOP 1 - START	-XDI	1
FORWARD/REVERSE 1 - REVERSE	-XDI	2
RESET	-XDI	3
EMERGENCY STOP 0 - ACTIVE	-XDI	4
NOT SPECIFIED	-XDI	5
DI6 NOT IN USE	-XDI	6
OUTPUT: READY	-XDIO	1
OUTPUT: RUNNING	-XDIO	2

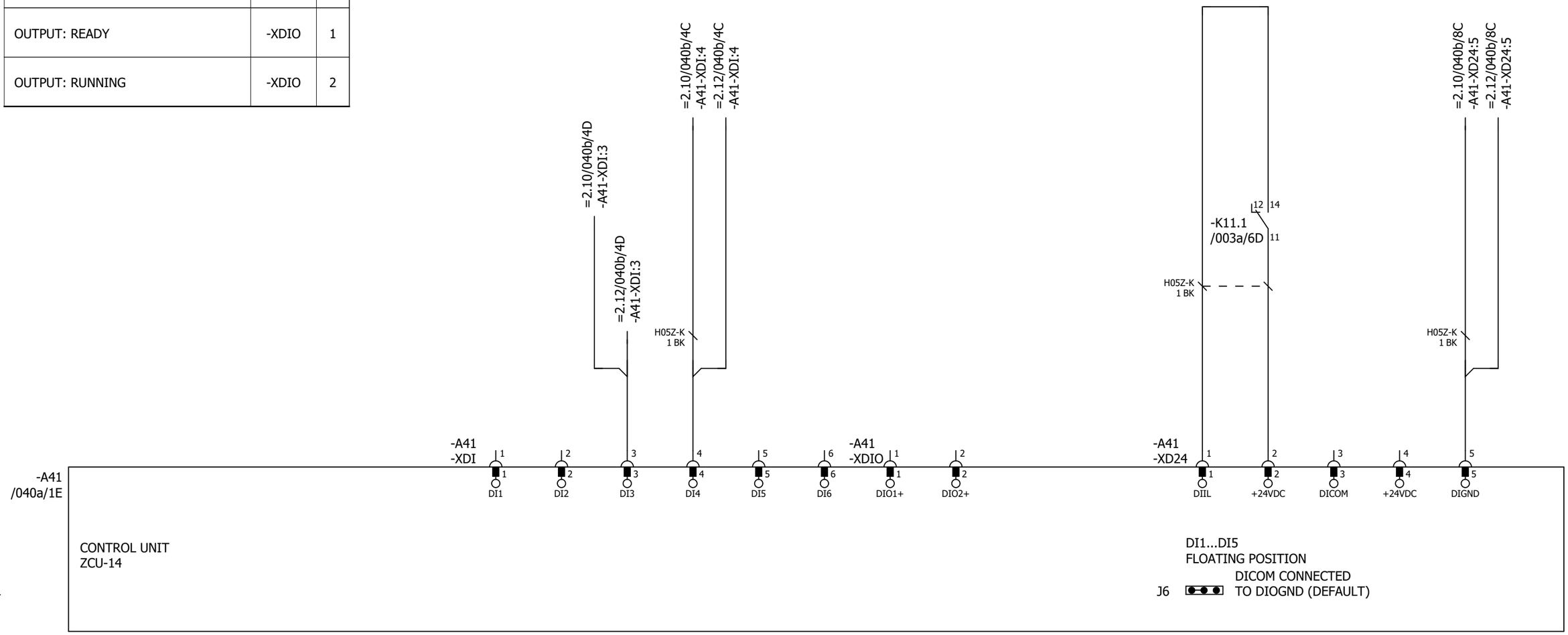

Cust. Doc. No.	Prep. Sky-Xin Zhang 02.08.2023	Title CONTROL BOARD INV2.11 ACS880-107-0078A-3 400V	Circuit diagram EFS2
Cust. Ref. No.	App.		SAP Doc. No.
Customer WMMP	Project Zhaka Jack-up Lift System Zhaka Jack-up Lift System-1		EPLAN Doc. No. 3ABDC230674 - 2.11
			ABB Ref. No.
			Resp. Dept.

Item Des.
= 2.11
+ 2.07.1

Rev. .1 Sheet 040b
Cont. 040c

Control and status signals	Terminal	Pin
MOTOR TEMP. MONITORING 0(2)…10V	-XAI	4
AI2 NOT SPECIFIED BY DEFAULT NOT IN USE 0(4)…20mA	-XAI	6
CURR SOU MOT TEMP MONIT 0(4)...20mA	-XAO	1
CURRENT 0(4)…20mA ↔ 0(4)…MOTOR CURRENT	-XAO	3

P345812 / 29711

Cust. Doc. No.	Prep. Sky-Xin Zhang 02.08.2023	Title CONTROL BOARD INV2.11 ACS880-107-0078A-3 400V	Circuit diagram EFS2
Cust. Ref. No.	App.		SAP Doc. No.
Customer WMMP	Project Zhaka Jack-up Lift System Zhaka Jack-up Lift System-1		EPLAN Doc. No. 3ABDC230674 - 2.11
			ABB Ref. No.
			Resp. Dept.

Item Des.
= 2.11
+ 2.07.1

Rev. .1 Sheet 040c
Cont. 040d

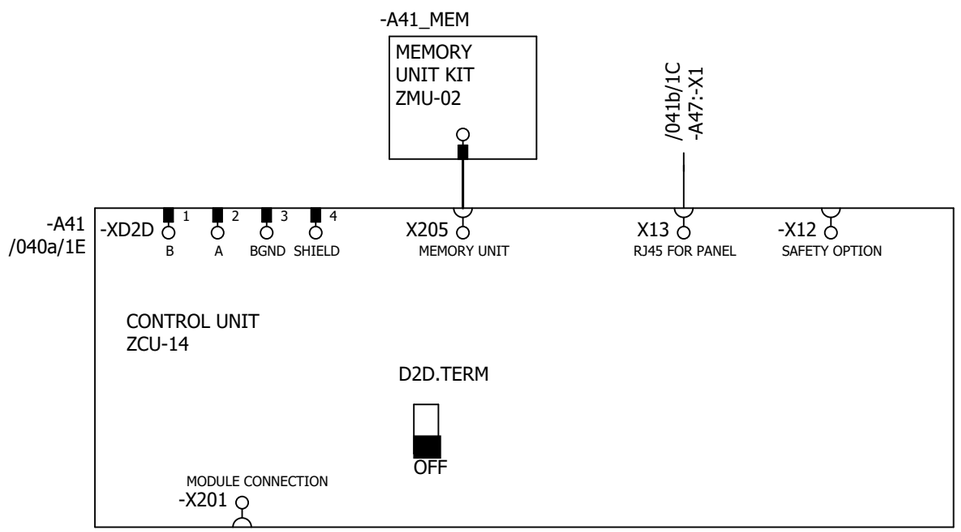

P345812 / 29711

Cust. Doc. No.	Prep. Sky-Xin Zhang 02.08.2023	Title CONTROL BOARD INV2.11 ACS880-107-0078A-3 400V	Circuit diagram EFS2
Cust. Ref. No.	App.		SAP Doc. No.
Customer WMMP	Project Zhaka Jack-up Lift System Zhaka Jack-up Lift System-1		EPLAN Doc. No. 3ABDC230674 - 2.11
			ABB Ref. No.
			Resp. Dept.

Item Des.
= 2.11
+ 2.07.1

Rev. .1 Sheet 040d
Cont. 041a

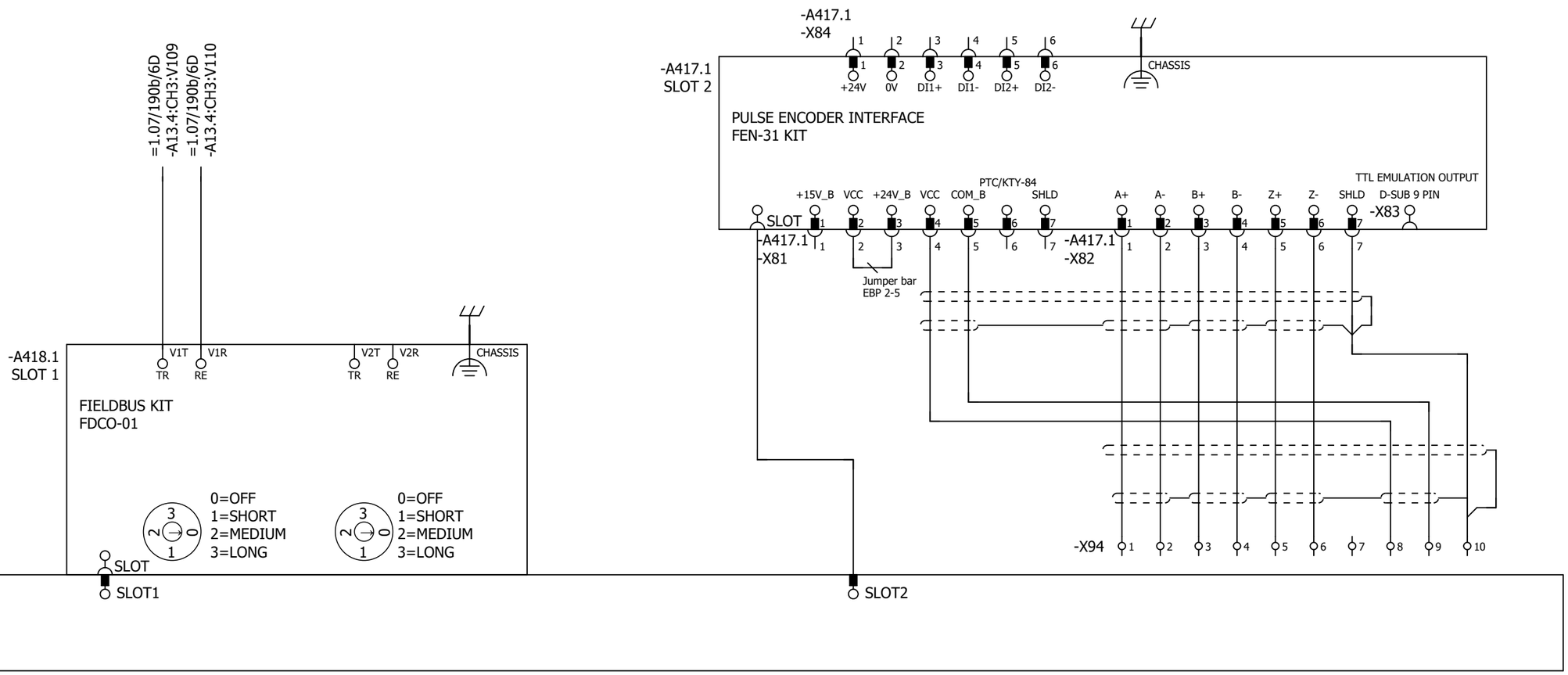

Cust. Doc. No.	Prep. Sky-Xin Zhang 02.08.2023	Title OPTION CARDS	Circuit diagram EFS2	Item Des.	
Cust. Ref. No.	App.	INV2.11	SAP Doc. No.	= 2.11	
Customer WMMP	Project Zhaka Jack-up Lift System	ACS880-107-0078A-3	EPLAN Doc. No. 3ABDC230674 - 2.11	+ 2.07.1	
	Zhaka Jack-up Lift System-1	400V	ABB Ref. No.	Rev. .1	Sheet 041a
			Resp. Dept.	Cont.	041b

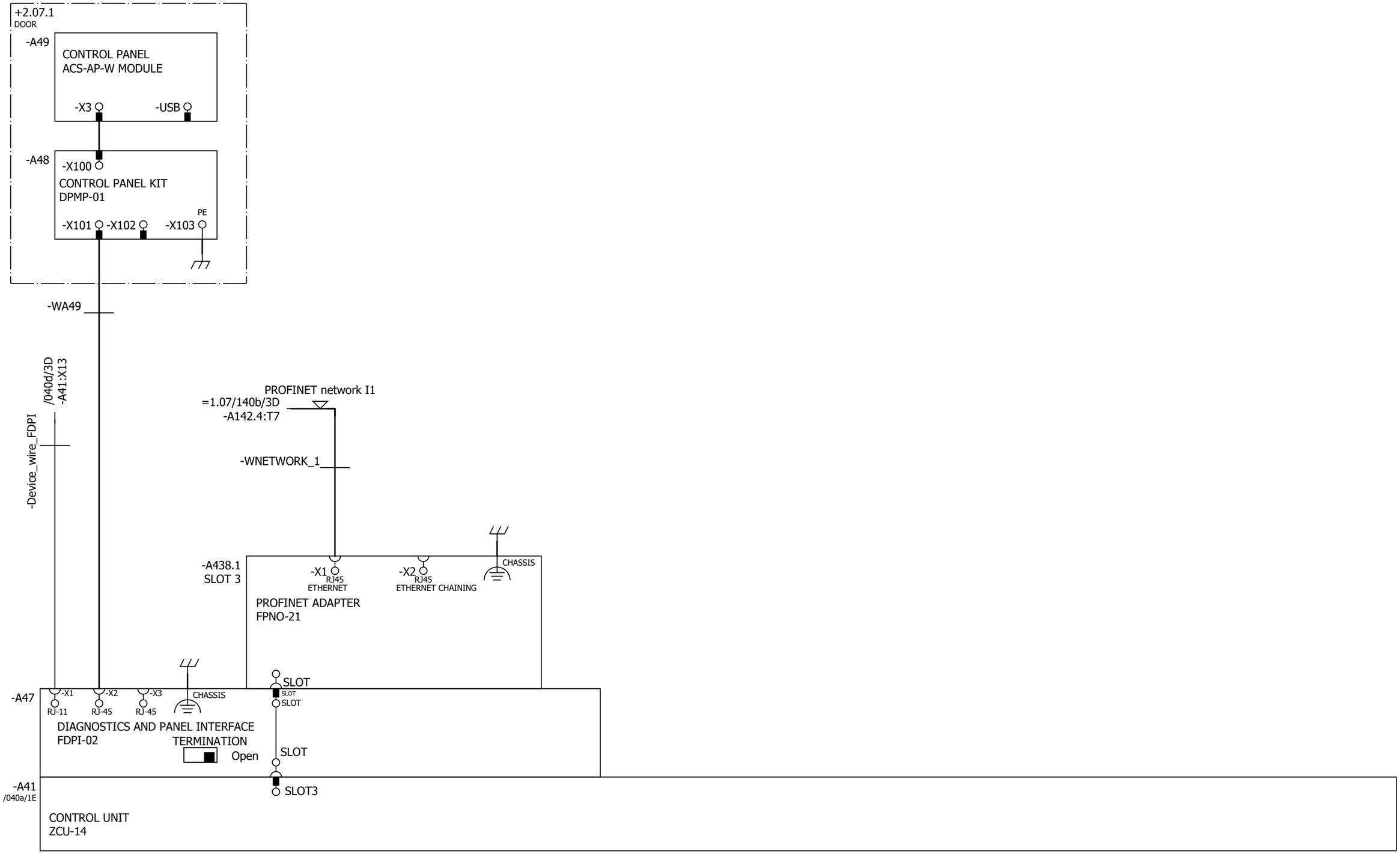

Cust. Doc. No.	Prep. Sky-Xin Zhang 02.08.2023	Title OPTION CARDS	Circuit diagram EFS2	Item Des.	
Cust. Ref. No.	App.	INV2.11	SAP Doc. No.	= 2.11	
Customer WMMP	Project Zhaka Jack-up Lift System	ACS880-107-0078A-3	EPLAN Doc. No. 3ABDC230674 - 2.11	+ 2.07.1	
	Zhaka Jack-up Lift System-1	400V	ABB Ref. No.	Rev. .1	Sheet 041b
			Resp. Dept.	Cont.	061a

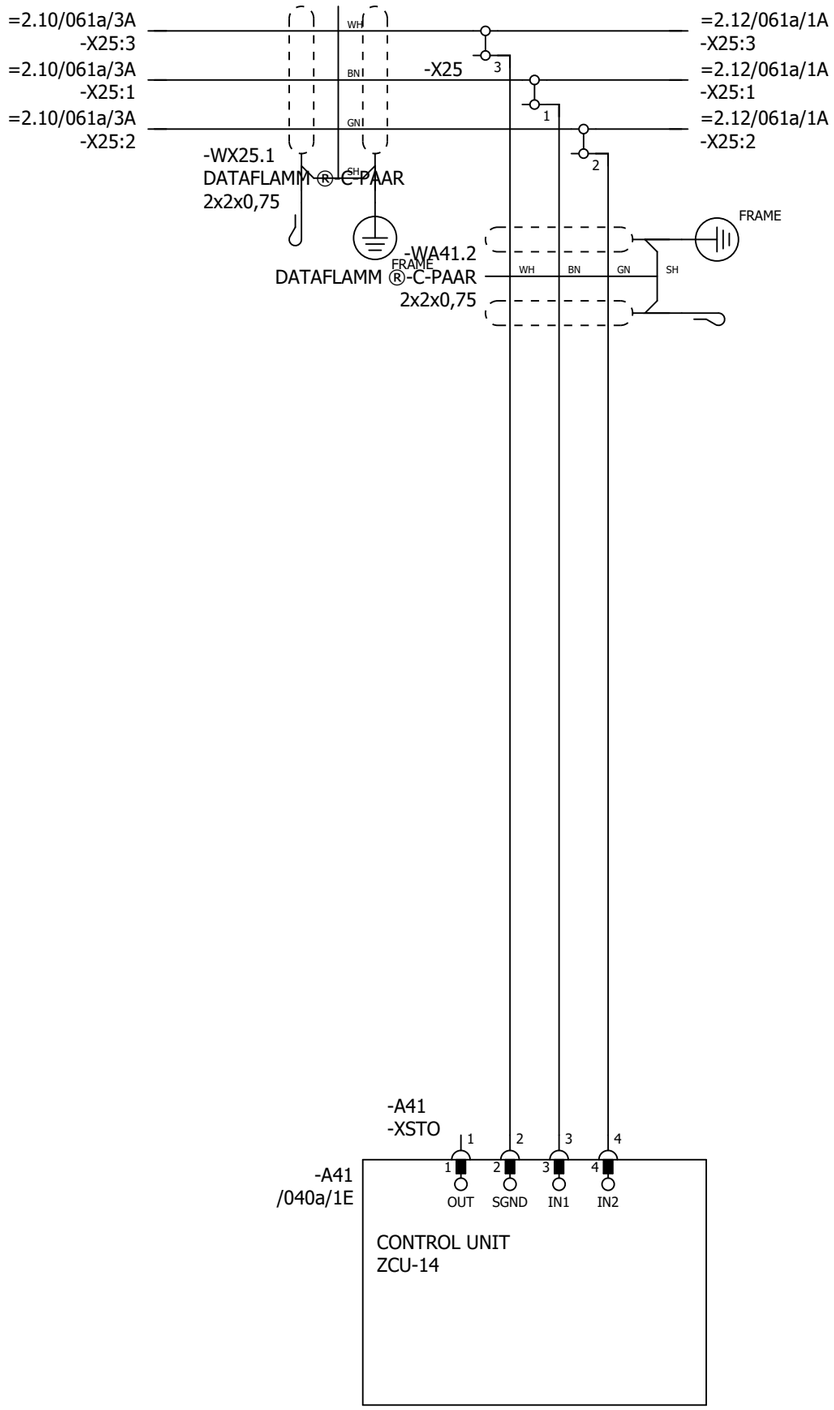

P345812 / 29711

SAFETY CIRCUIT
MACRO REVISION 6
RULES CONVERTED 19.7.2023

Cust. Doc. No.	Prep. Sky-Xin Zhang 02.08.2023	Title SAFETY CIRCUIT INV2.11 ACS880-107-0078A-3 400V	Circuit diagram EFS2
Cust. Ref. No.	App.		SAP Doc. No.
Customer WMMP	Project Zhaka Jack-up Lift System Zhaka Jack-up Lift System-1		EPLAN Doc. No. 3ABDC230674 - 2.11
			ABB Ref. No.
			Resp. Dept.

Item Des.
= 2.11
+ 2.07.1

Rev. .1 Sheet 061a

Cont. &MPC/Part list_1

Part list: 3ABDC230674DU02023

Item	Sort String	Qty.Str	Unit	Component Number	Description and text	Technical data
0010		1.000	ST		ACS880-107-0078A-3+A012+B053+C121+C132+	
0020		1.000	ST		_C206+E210+F272+F287+F288+G300+G307+G315	
0030		1.000	ST		_+G320+G330+G344+H352+H367+K450+K492+K49	
0040		1.000	ST		_3+L502+L503+P913+Q964	
0050		1.000	ST		=2.11	
0060		1.000	ST		+2.07.1,INU3	
0070		1.000	ST		Powerconversionequipment	
0080	-A41_MEM	1.000	PC	3AXD50000006010	MEMORY UNIT KIT ZMU-02	
0090	-T11	1.000	PC	3AUA0000120009-M	ACS880-104-0078A-3+P922	+P922
0100	SCREW	1.000	PC	3AFE68681481	SCREW K30X10 TORX	PT WN1452 ZN
0110	SOFTWARE	1.000	PC	3AUA0000153462	SOFTWARE PRIMARY CONTROL PROGRA	AINF6 FOR ZCU-12/14
0120		1.000	ST		R4imoduleDCfuse	
0130	-F11.1-2	2.000	PC	3AXD50000000219	FUSE FR27UQ69V160T/160A	6.921 CP URQ 27X60MM FERRULE;AR
0140		1.000	ST		R3i-R4imoduleDCfusebase	
0150	(-F11.1-2)	2.000	PC	3AUA0000089227	FUSE HOLDER FUSE BASE US271MI 150A	FUSE BASE US271MI 150A 800V
0160		1.000	ST		24VDCsupplyZCU	
0170	-WA41_1	1.000	PC	3AXD50000005218	WIRE HARNESS 24VDC SUPPLY X51 ZCU V	HALOGEN FREE;X51_A51
0180		1.000	ST		Rooffancontrol	
0190	-WA41_3	1.000	PC	3AXD50000002688	WIRE HARNESS FAN CONTROL MAIN WIRE	HALOGEN FREE;X208_X26.3
0200		1.000	ST		Bottomrowmodulewireharness	
0210	-WT11	1.000	PC	3AXD50000002418	WIRE HARNESS R4I FUSE_MODULE BR V2	HALOGEN FREE;MAIN CIRCUIT WIRE SET
0220		1.000	ST		Encoder	
0230	-A417.1	1.000	PC	3AFE68978955	COMMUNIC. ADAPTER FEN-31	FEN-31
0240		1.000	ST		Optionmodule	
0250	-A418.1	1.000	PC	3AUA0000107392	COMMUNIC. ADAPTER FDCO-01	
0260		1.000	ST		Controlpanel	
0270	-A47	1.000	PC	3AUA0000108650	FIELDBUS KIT FDPI-02	PANEL BUS ADAPTER
0280		1.000	ST		DCfusesupervision	
0290	-K11.1-2	2.000	PC	3AXD50000021313	RELAY DEK_REL_G24/21	250 V;6 A;COIL 24VDC
0300		1.000	ST		Profinetswitch	
0310		1.000	ST		FieldBus	
0320	-A438.1	1.000	PC	3AXD50000192779	OPTION MODULE FPNO-21	PROFINET IO
0330		1.000	ST		Supplementtorelay	

P345812 / 29711

Cust. Doc. No.	Prep.	Title PART LIST INV2.11 ACS880-107-0078A-3 400V	Item Des. = 2.11 +
Cust. Ref. No.	App.		SAP Doc. No.
Customer WMMP	Project Zhaka Jack-up Lift System Zhaka Jack-up Lift System-1		EPLAN Doc. No. 3ABDC230674 - 2.11
			ABB Ref. No. / Rev. / Sheet Part list_1
			Resp. Dept. / Cont. Part list_2

Part list: 3ABDC230674DU02023

Item	Sort String	Qty.Str	Unit	Component Number	Description and text	Technical data
0340	(-K11.1)	1.000	PC	3AXD50000021312	TERMINAL BLOCK ST EB2_DIK_RD 2716693	2POLE, 6,15 MM PITCH;FOR DEK RELAYS

P345812 / 29711

Cust. Doc. No.	Prep.	Title PART LIST INV2.11 ACS880-107-0078A-3 400V	Item Des. = 2.11 +
Cust. Ref. No.	App.		SAP Doc. No.
Customer WMMP	Project Zhaka Jack-up Lift System Zhaka Jack-up Lift System-1		EPLAN Doc. No. 3ABDC230674 - 2.11
			ABB Ref. No. / Rev. / Sheet Part list_2
			Resp. Dept. / Cont. &EMA/1

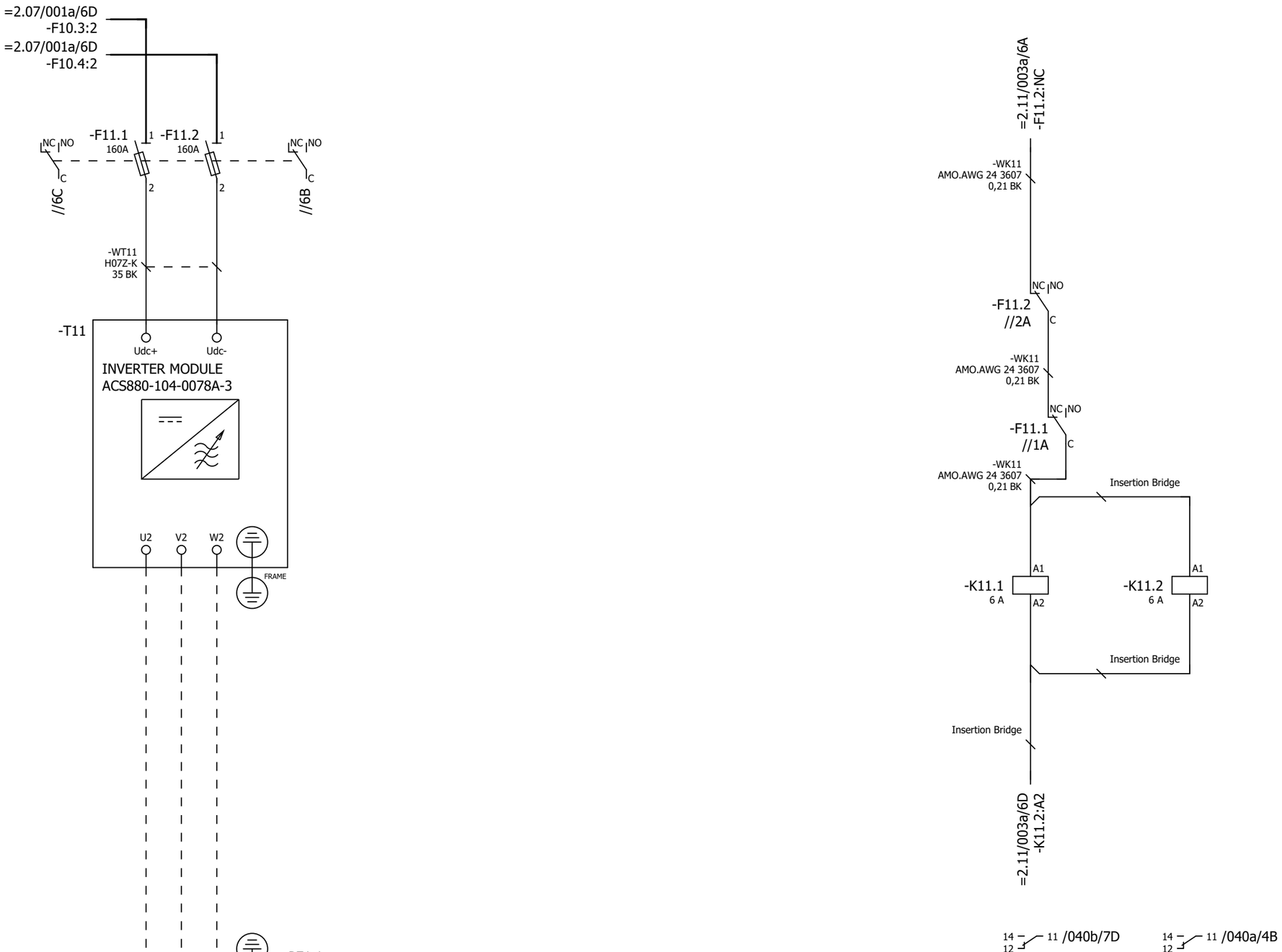

P345812 / 29711

Cust. Doc. No.	Prep. Sky-Xin Zhang 02.08.2023	Title MAIN CIRCUIT	Circuit diagram EFS2
Cust. Ref. No.	App.	INV2.12	SAP Doc. No.
Customer WMMP	Project Zhaka Jack-up Lift System	ACS880-107-0078A-3	EPLAN Doc. No. 3ABDC230674 - 2.12
	Zhaka Jack-up Lift System-1	400V	ABB Ref. No.
			Resp. Dept.

Item Des.
= 2.12
+ 2.07.1

Rev. .1 Sheet 003a
Cont. 040a

Control and status signals	Terminal	Pin
E-STOP FEEDBACK 1 - ESTOP ACTIVE	-XRO1	12
RUNNING 1 - RUNNING	-XRO2	22
FAULT (-1) 1 - NO FAULT	-XRO3	32

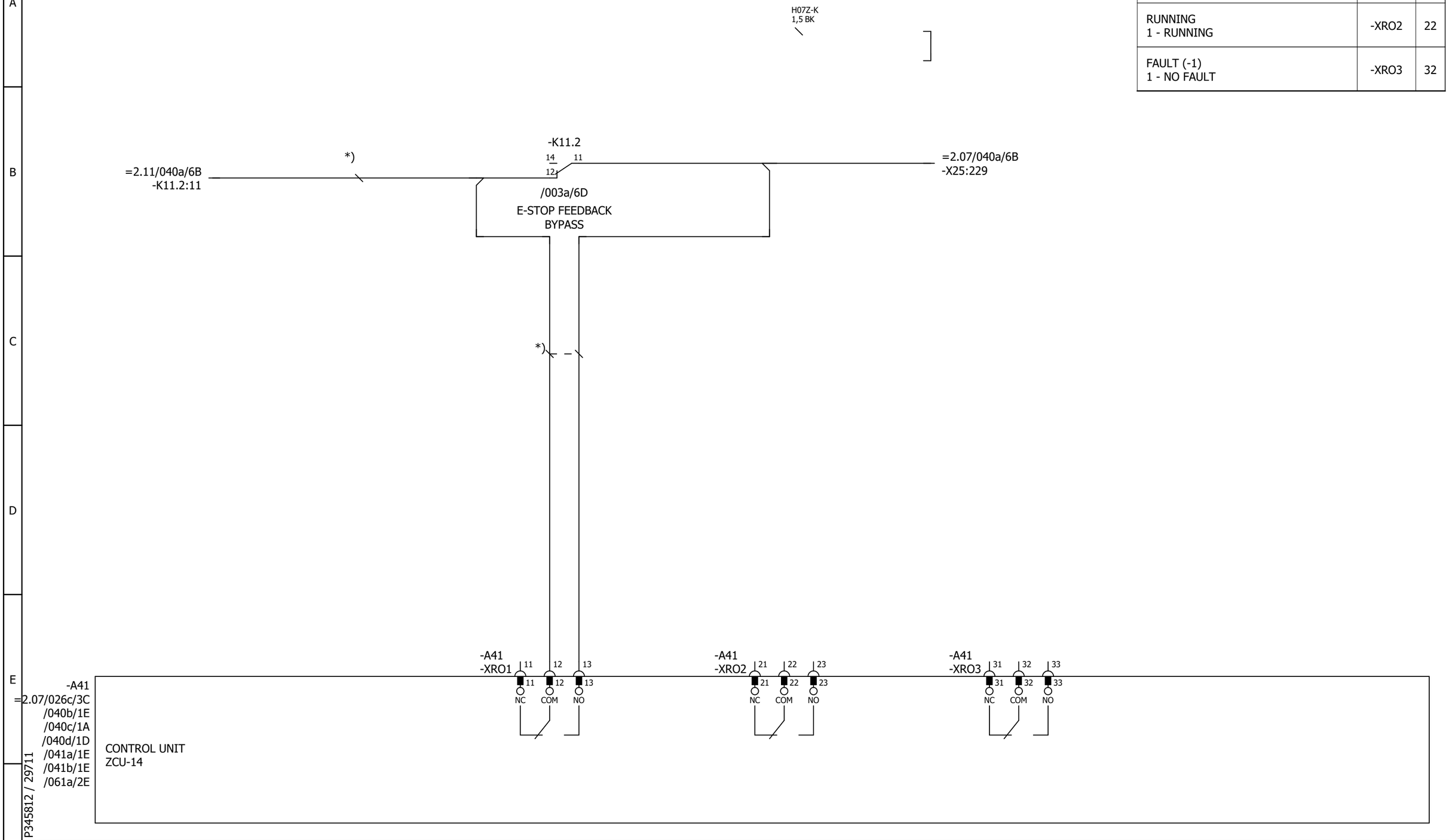

Cust. Doc. No.	Prep. Sky-Xin Zhang 02.08.2023	Title CONTROL BOARD INV2.12 ACS880-107-0078A-3 400V	Circuit diagram EFS2
Cust. Ref. No.	App.		SAP Doc. No.
Customer WMMP	Project Zhaka Jack-up Lift System Zhaka Jack-up Lift System-1		EPLAN Doc. No. 3ABDC230674 - 2.12
			ABB Ref. No.
			Resp. Dept.

Item Des.
= 2.12
+ 2.07.1

Rev. .1 Sheet 040a
Cont. 040b

Control and status signals	Terminal	Pin
DIGITAL INTERLOCK	-XD24	1
START/STOP 1 - START	-XDI	1
FORWARD/REVERSE 1 - REVERSE	-XDI	2
RESET	-XDI	3
EMERGENCY STOP 0 - ACTIVE	-XDI	4
NOT SPECIFIED	-XDI	5
DI6 NOT IN USE	-XDI	6
OUTPUT: READY	-XDIO	1
OUTPUT: RUNNING	-XDIO	2

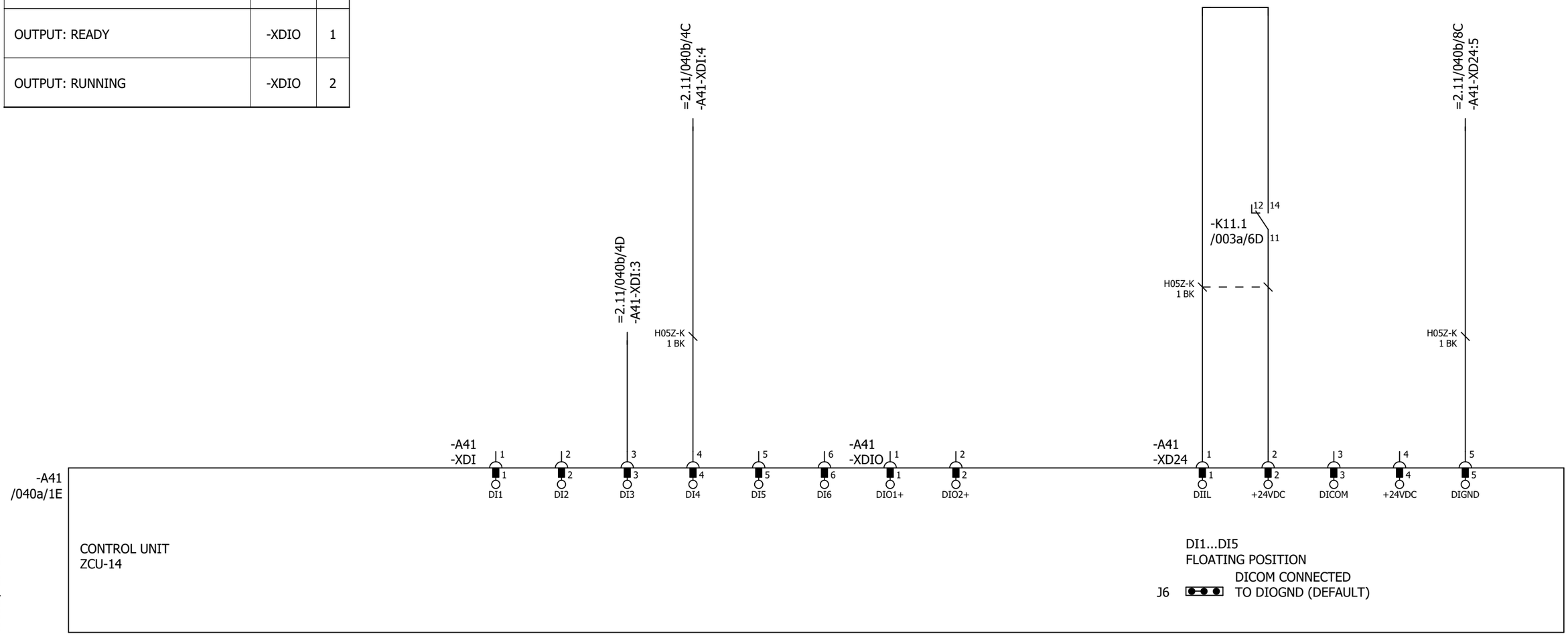

P345812 / 29711

Cust. Doc. No.	Prep. Sky-Xin Zhang 02.08.2023	Title CONTROL BOARD INV2.12 ACS880-107-0078A-3 400V	Circuit diagram EFS2
Cust. Ref. No.	App.		SAP Doc. No.
Customer WMMP	Project Zhaka Jack-up Lift System Zhaka Jack-up Lift System-1		EPLAN Doc. No. 3ABDC230674 - 2.12
			ABB Ref. No.
			Resp. Dept.

Item Des.
= 2.12
+ 2.07.1

Rev. .1 Sheet 040b
Cont. 040c

Control and status signals	Terminal	Pin
MOTOR TEMP. MONITORING 0(2)…10V	-XAI	4
AI2 NOT SPECIFIED BY DEFAULT NOT IN USE 0(4)…20mA	-XAI	6
CURR SOU MOT TEMP MONIT 0(4)...20mA	-XAO	1
CURRENT 0(4)…20mA ↔ 0(4)…MOTOR CURRENT	-XAO	3

P345812 / 29711

Cust. Doc. No.	Prep. Sky-Xin Zhang 02.08.2023	Title CONTROL BOARD INV2.12 ACS880-107-0078A-3 400V	Circuit diagram EFS2
Cust. Ref. No.	App.		SAP Doc. No.
Customer WMMP	Project Zhaka Jack-up Lift System Zhaka Jack-up Lift System-1		EPLAN Doc. No. 3ABDC230674 - 2.12
			ABB Ref. No.
			Resp. Dept.

Item Des.
= 2.12
+ 2.07.1

Rev. .1 Sheet 040c
Cont. 040d

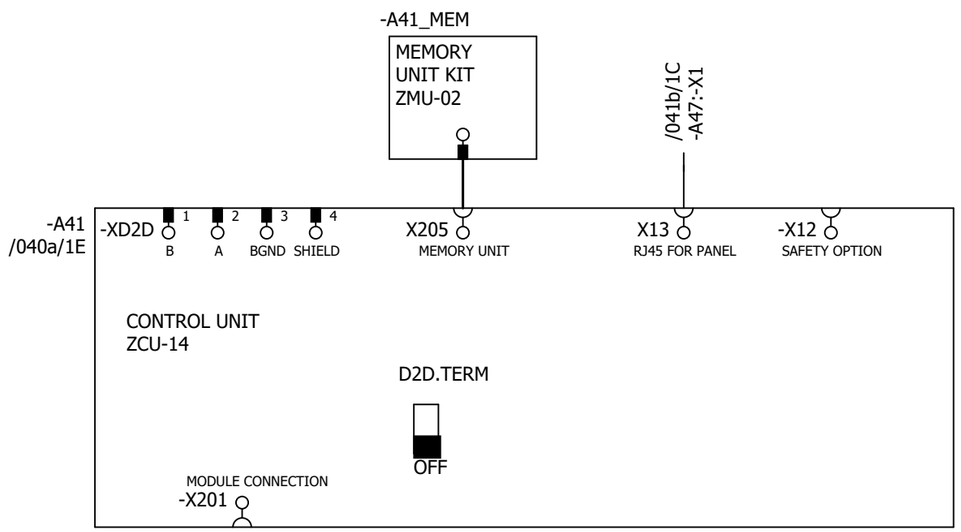

P345812 / 29711

Cust. Doc. No.	Prep. Sky-Xin Zhang 02.08.2023	Title CONTROL BOARD INV2.12 ACS880-107-0078A-3 400V	Circuit diagram EFS2
Cust. Ref. No.	App.		SAP Doc. No.
Customer WMMP	Project Zhaka Jack-up Lift System Zhaka Jack-up Lift System-1		EPLAN Doc. No. 3ABDC230674 - 2.12
			ABB Ref. No.
			Resp. Dept.

Item Des.
= 2.12
+ 2.07.1

Rev. .1 Sheet 040d
Cont. 041a

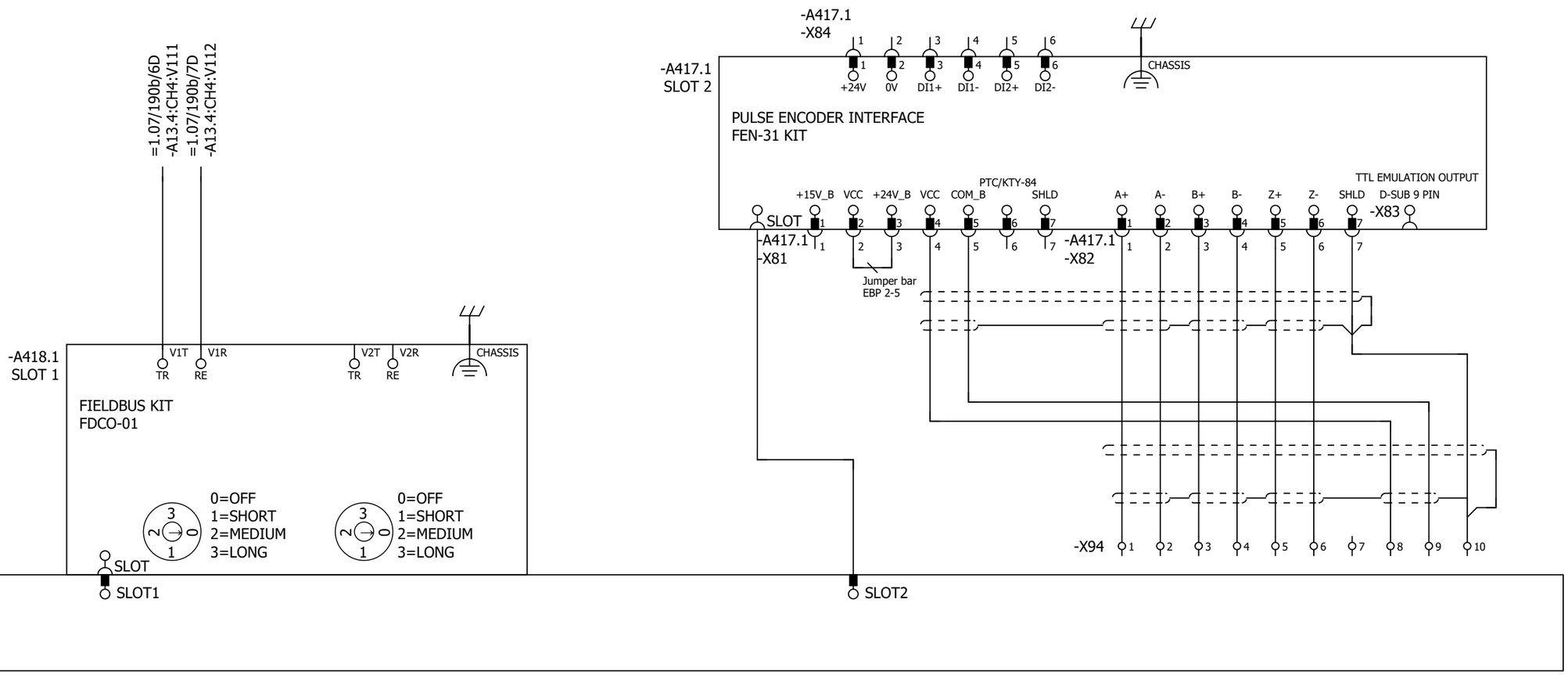

Cust. Doc. No.	Prep. Sky-Xin Zhang 02.08.2023	Title OPTION CARDS	Circuit diagram EFS2	Item Des.	
Cust. Ref. No.	App.	INV2.12	SAP Doc. No.	= 2.12	
Customer WMMP	Project Zhaka Jack-up Lift System	ACS880-107-0078A-3	EPLAN Doc. No. 3ABDC230674 - 2.12	+ 2.07.1	
	Zhaka Jack-up Lift System-1	400V	ABB Ref. No.	Rev. .1	Sheet 041a
			Resp. Dept.	Cont.	041b

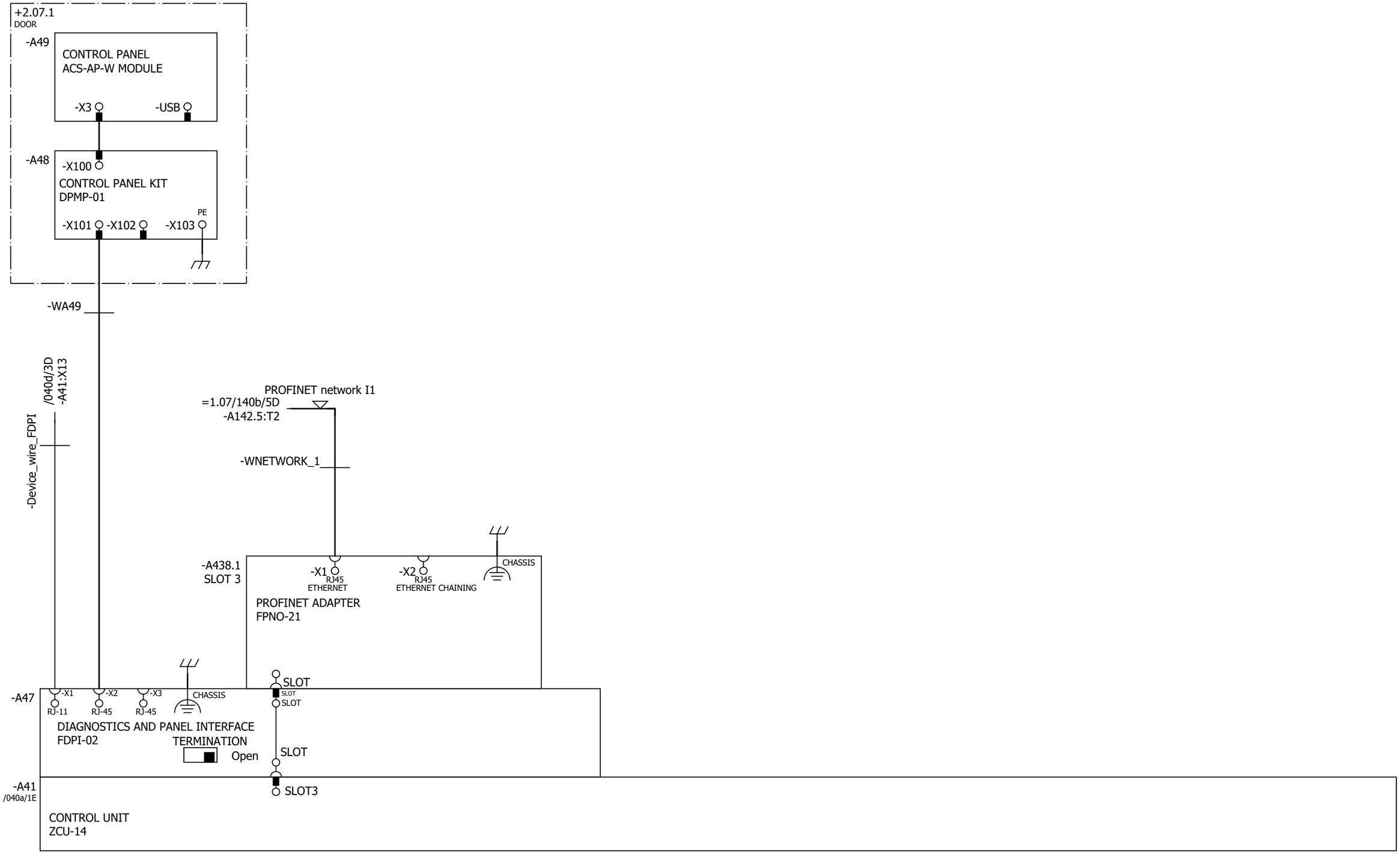

Cust. Doc. No.	Prep. Sky-Xin Zhang 02.08.2023	Title OPTION CARDS	Circuit diagram EFS2	Item Des.	
Cust. Ref. No.	App.	INV2.12	SAP Doc. No.	= 2.12	
Customer WMMP	Project Zhaka Jack-up Lift System	ACS880-107-0078A-3	EPLAN Doc. No. 3ABDC230674 - 2.12	+ 2.07.1	
	Zhaka Jack-up Lift System-1	400V	ABB Ref. No.	Rev. .1	Sheet 041b
			Resp. Dept.	Cont.	061a

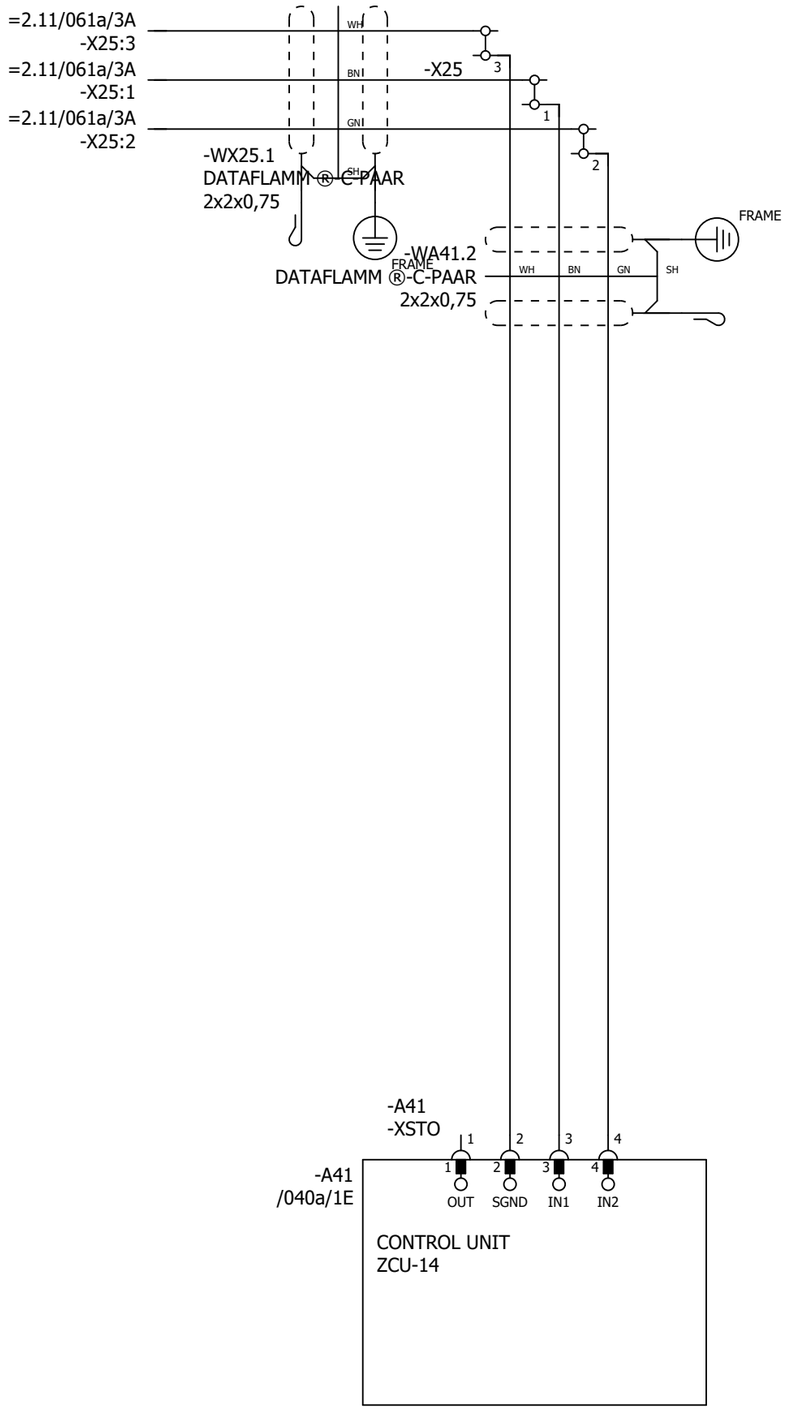

P345812 / 29711

SAFETY CIRCUIT
MACRO REVISION 6
RULES CONVERTED 19.7.2023

Cust. Doc. No.	Prep. Sky-Xin Zhang 02.08.2023	Title SAFETY CIRCUIT	Circuit diagram EFS2	Item Des.	
Cust. Ref. No.	App.	INV2.12	SAP Doc. No.	= 2.12	
Customer WMMP	Project Zhaka Jack-up Lift System	ACS880-107-0078A-3	EPLAN Doc. No. 3ABDC230674 - 2.12	+ 2.07.1	
	Zhaka Jack-up Lift System-1	400V	ABB Ref. No.	Rev. .1	Sheet 061a
			Resp. Dept.	Cont.	&MPC/Part list_1

Part list: 3ABDC230674DU02024

Item	Sort String	Qty.Str	Unit	Component Number	Description and text	Technical data
0010		1.000	ST		ACS880-107-0078A-3+A012+B053+C121+C132+	
0020		1.000	ST		_C206+E210+F272+F287+F288+G300+G307+G315	
0030		1.000	ST		_+G320+G330+G344+H352+H367+K450+K492+L50	
0040		1.000	ST		_2+L503+P913+Q964	
0050		1.000	ST		=2.12	
0060		1.000	ST		+2.12.1,INU3	
0070		1.000	ST		Powerconversionequipment	
0080	-A41_MEM	1.000	PC	3AXD50000006010	MEMORY UNIT KIT ZMU-02	
0090	-T11	1.000	PC	3AUA0000120009-M	ACS880-104-0078A-3+P922	+P922
0100	SCREW	1.000	PC	3AFE68681481	SCREW K30X10 TORX	PT WN1452 ZN
0110	SOFTWARE	1.000	PC	3AUA0000153462	SOFTWARE PRIMARY CONTROL PROGRA	AINF6 FOR ZCU-12/14
0120		1.000	ST		R4imoduleDCfuse	
0130	-F11.1-2	2.000	PC	3AXD50000000219	FUSE FR27UQ69V160T/160A	6.921 CP URQ 27X60MM FERRULE;AR
0140		1.000	ST		R3i-R4imoduleDCfusebase	
0150	(-F11.1-2)	2.000	PC	3AUA0000089227	FUSE HOLDER FUSE BASE US271MI 150A	FUSE BASE US271MI 150A 800V
0160		1.000	ST		24VDCsupplyZCU	
0170	-WA41_1	1.000	PC	3AXD50000005218	WIRE HARNESS 24VDC SUPPLY X51 ZCU V	HALOGEN FREE;X51_A51
0180		1.000	ST		Rooffancontrol	
0190	-WA41_3	1.000	PC	3AXD50000002688	WIRE HARNESS FAN CONTROL MAIN WIRE	HALOGEN FREE;X208_X26.3
0200		1.000	ST		Bottomrowmodulewireharness	
0210	-WT11	1.000	PC	3AXD50000002418	WIRE HARNESS R4I FUSE_MODULE BR V2	HALOGEN FREE;MAIN CIRCUIT WIRE SET
0220		1.000	ST		Encoder	
0230	-A417.1	1.000	PC	3AFE68978955	COMMUNIC. ADAPTER FEN-31	FEN-31
0240		1.000	ST		Optionmodule	
0250	-A418.1	1.000	PC	3AUA0000107392	COMMUNIC. ADAPTER FDCO-01	
0260		1.000	ST		Controlpanel	
0270	-A47	1.000	PC	3AUA0000108650	FIELDBUS KIT FDPI-02	PANEL BUS ADAPTER
0280		1.000	ST		DCfusesupervision	
0290	-K11.1-2	2.000	PC	3AXD50000021313	RELAY DEK_REL_G24/21	250 V;6 A;COIL 24VDC
0300		1.000	ST		FieldBus	
0310	-A438.1	1.000	PC	3AXD50000192779	OPTION MODULE FPNO-21	PROFINET IO
0320		1.000	ST		Supplementtorelay	
0330	(-K11.1)	1.000	PC	3AXD50000021312	TERMINAL BLOCK ST EB2_DIK_RD 2716693	2POLE, 6,15 MM PITCH;FOR DEK RELAYS

P345812 / 29711

Cust. Doc. No.	Prep.	Title PART LIST INV2.12 ACS880-107-0078A-3 400V	Item Des. = 2.12 +
Cust. Ref. No.	App.		SAP Doc. No.
Customer WMMP	Project Zhaka Jack-up Lift System Zhaka Jack-up Lift System-1		EPLAN Doc. No. 3ABDC230674 - 2.12
			ABB Ref. No. / Rev. / Sheet Part list_1
			Resp. Dept. / Cont. &EMA/1

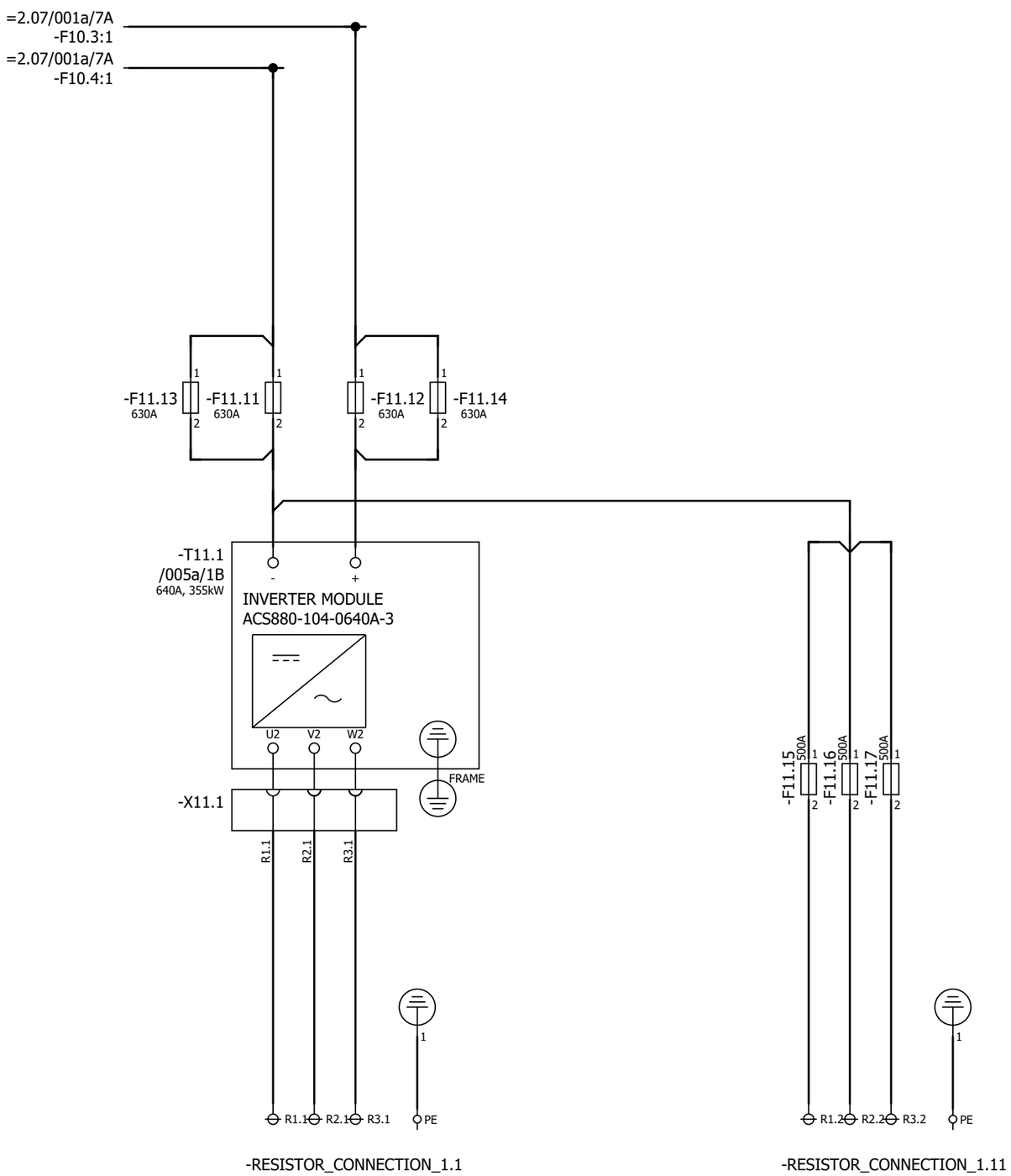

-RESISTOR_CONNECTION_1.1

-RESISTOR_CONNECTION_1.11

P345812 / 29711

Cust. Doc. No.	Prep. Sky-Xin Zhang 02.08.2023	Title MAIN CIRCUIT	Circuit diagram EFS2	Item Des.	
Cust. Ref. No.	App.	DBU	SAP Doc. No.	= 60	
Customer WMMP	Project Zhaka Jack-up Lift System	ACS880-607-0500-3	EPLAN Doc. No. 3ABDC230674 - 60	+ 60.1	
	Zhaka Jack-up Lift System-1	400V	ABB Ref. No.	Rev. .1	Sheet 001a
			Resp. Dept.	Cont.	005a

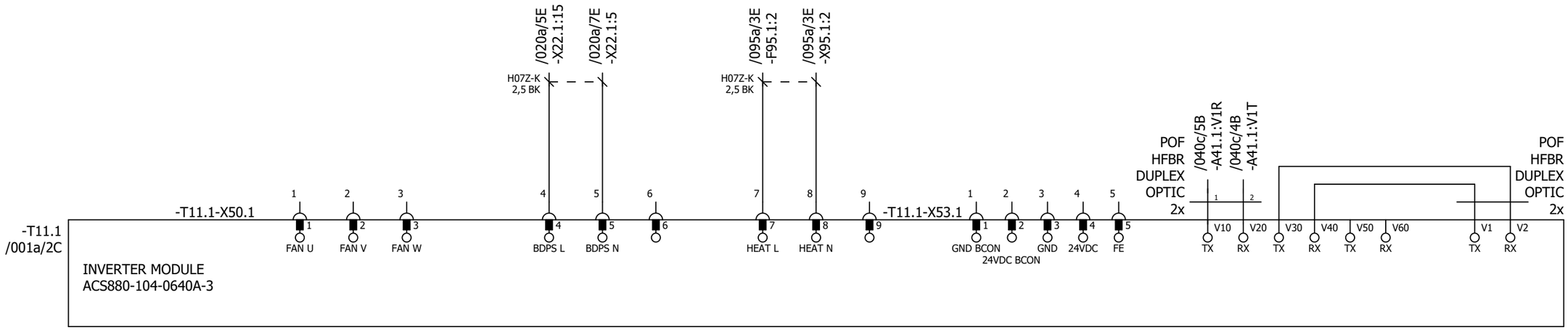

P345812 / 29711

Cust. Doc. No.	Prep. Sky-Xin Zhang 02.08.2023	Title INVERTER MODULES DBU ACS880-607-0500-3 400V	Circuit diagram EFS2
Cust. Ref. No.	App.		SAP Doc. No.
Customer WMMP	Project Zhaka Jack-up Lift System Zhaka Jack-up Lift System-1		EPLAN Doc. No. 3ABDC230674 - 60
			ABB Ref. No.
			Resp. Dept.

Item Des.
= 60
+ 60.1

Rev. .1 Sheet 005a
Cont. 020a

UPS CONTROL VOLTAGE DISTRIBUTION

AUXILIARY VOLTAGE DISTRIBUTION

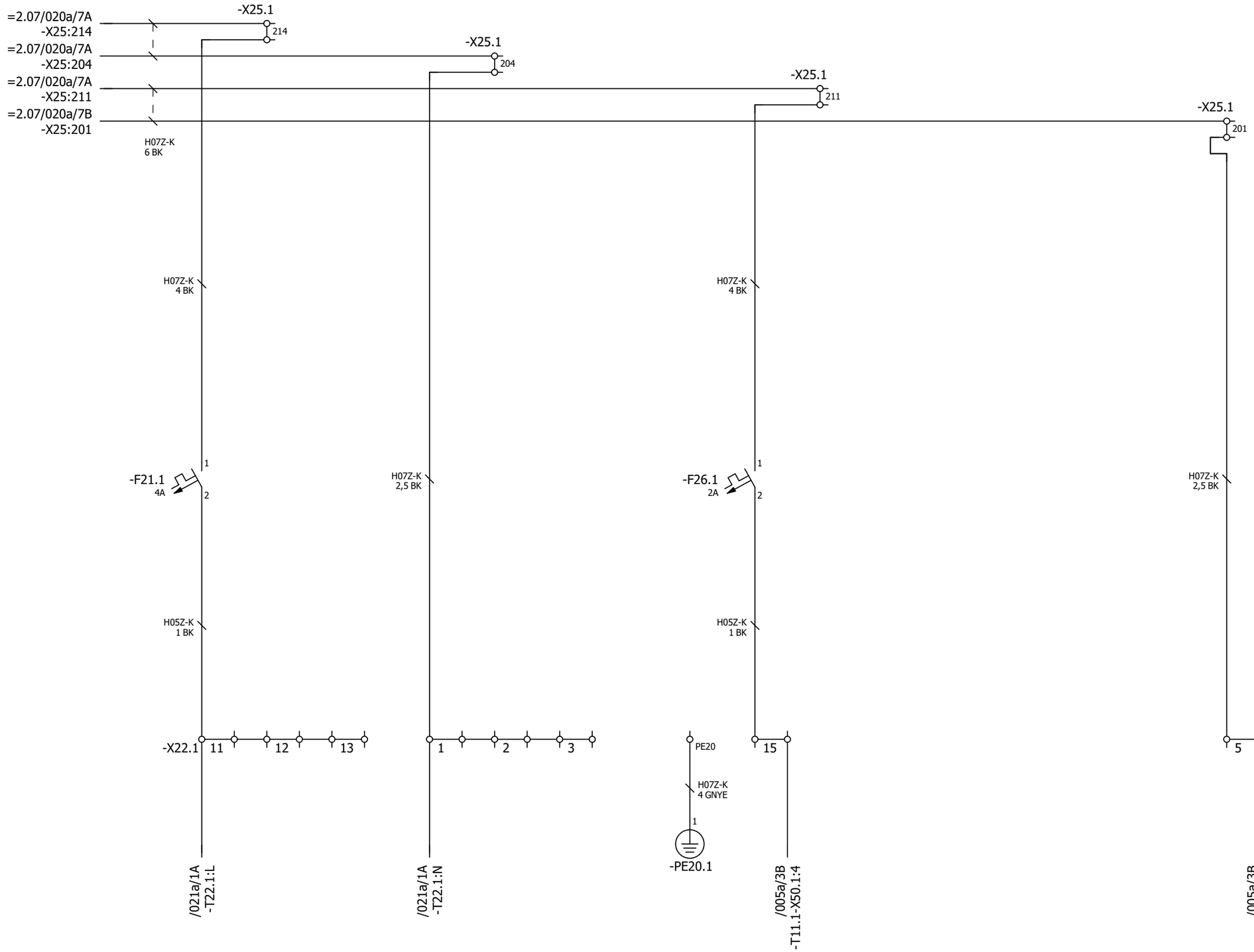

P345812 / 29711

Cust. Doc. No.	Prep. Sky-Xin Zhang 02.08.2023	Title AUXILIARY VOLTAGE DISTRIBUTION	Circuit diagram EFS2	Item Des.	
Cust. Ref. No.	App.	DBU	SAP Doc. No.	= 60	
Customer WMMP	Project Zhaka Jack-up Lift System	ACS880-607-0500-3	EPLAN Doc. No. 3ABDC230674 - 60	+ 60.1	
	Zhaka Jack-up Lift System-1	400V	ABB Ref. No.	Rev. .1	Sheet 020a
			Resp. Dept.	Cont.	021a

24V CONTROL VOLTAGE DISTRIBUTION

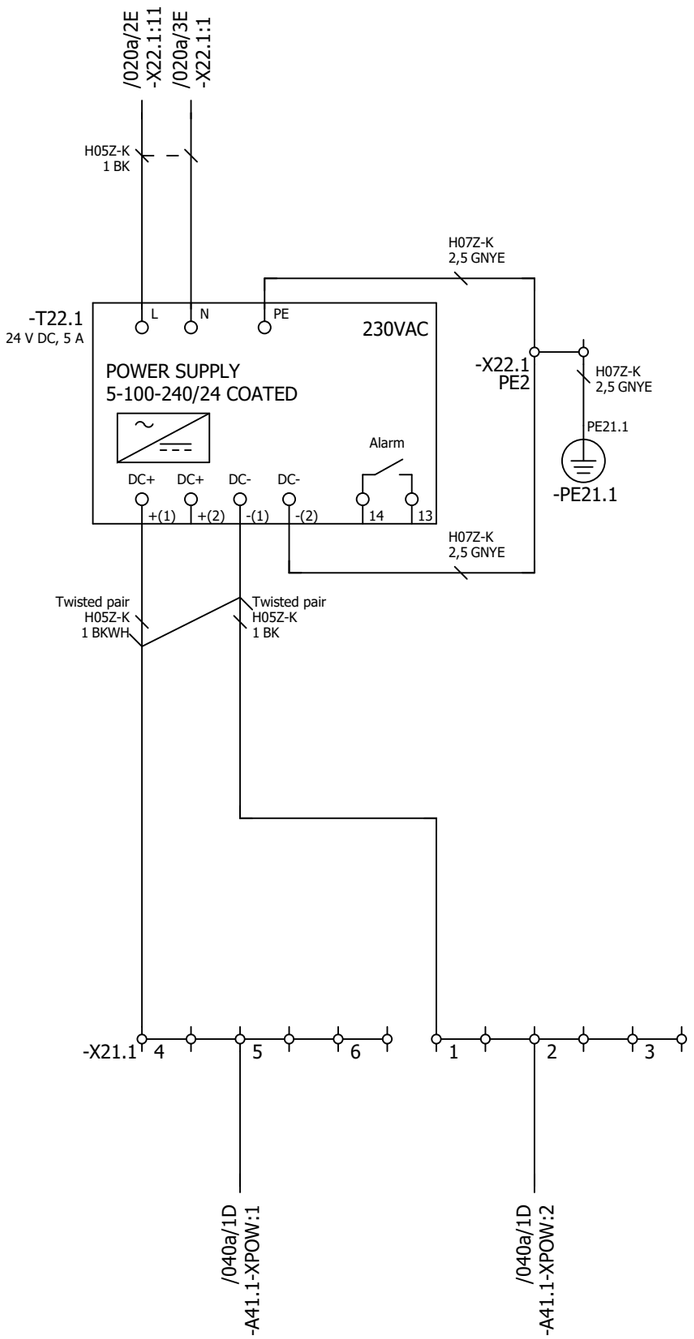

P345812 / 29711

Cust. Doc. No.	Prep. Sky-Xin Zhang 02.08.2023	Title AUXILIARY VOLTAGE DISTRIBUTION	Circuit diagram EFS2	Item Des.	
Cust. Ref. No.	App.	DBU	SAP Doc. No.	= 60	
Customer WMMP	Project Zhaka Jack-up Lift System	ACS880-607-0500-3	EPLAN Doc. No. 3ABDC230674 - 60	+ 60.1	
	Zhaka Jack-up Lift System-1	400V	ABB Ref. No.	Rev. .1	Sheet 021a
			Resp. Dept.	Cont.	040a

Control and status signals	Terminal	Pin
-A41 CHARGING CONTACTOR CONTROL	-XRO1	12
-A41 FAULT (-1) 1 - NO FAULT	-XRO2	22
-A41 MAIN BREAKER CONTROL	-XRO3	32

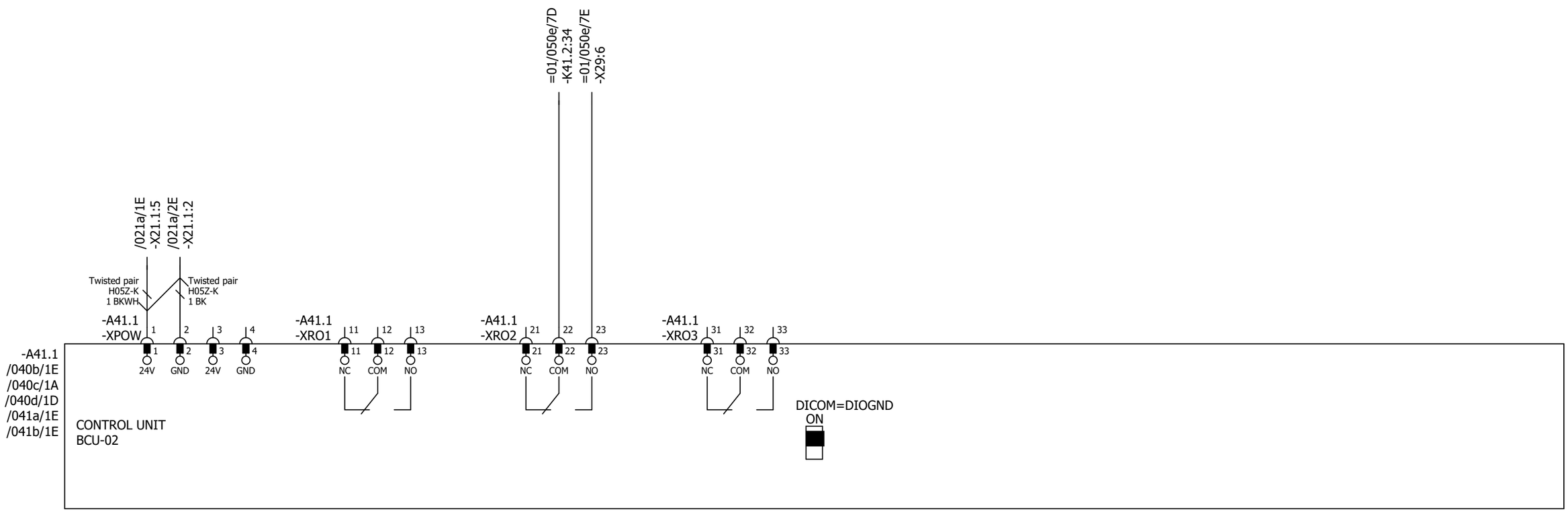

P345812 / 29711

Cust. Doc. No.	Prep. Sky-Xin Zhang 02.08.2023	Title CONTROL BOARD DBU ACS880-607-0500-3 400V	Circuit diagram EFS2
Cust. Ref. No.	App.		SAP Doc. No.
Customer WMMP	Project Zhaka Jack-up Lift System Zhaka Jack-up Lift System-1		EPLAN Doc. No. 3ABDC230674 - 60
			ABB Ref. No.
			Resp. Dept.

Item Des.
= 60
+ 60.1

Rev. .1 Sheet 040a
Cont. 040b

Control and status signals	Terminal	Pin
-A41 TEMPERATURE FAULT 0 - FAULT	-XDI	1
-A41 DI2 NOT IN USE	-XDI	2
-A41 DI3 NOT IN USE	-XDI	3
-A41 DI4 NOT IN USE	-XDI	4
-A41 DI5 NOT IN USE	-XDI	5
-A41 RESET 1 - RESET	-XDI	6
-A41 DIIL NOT IN USE	-XDI	7

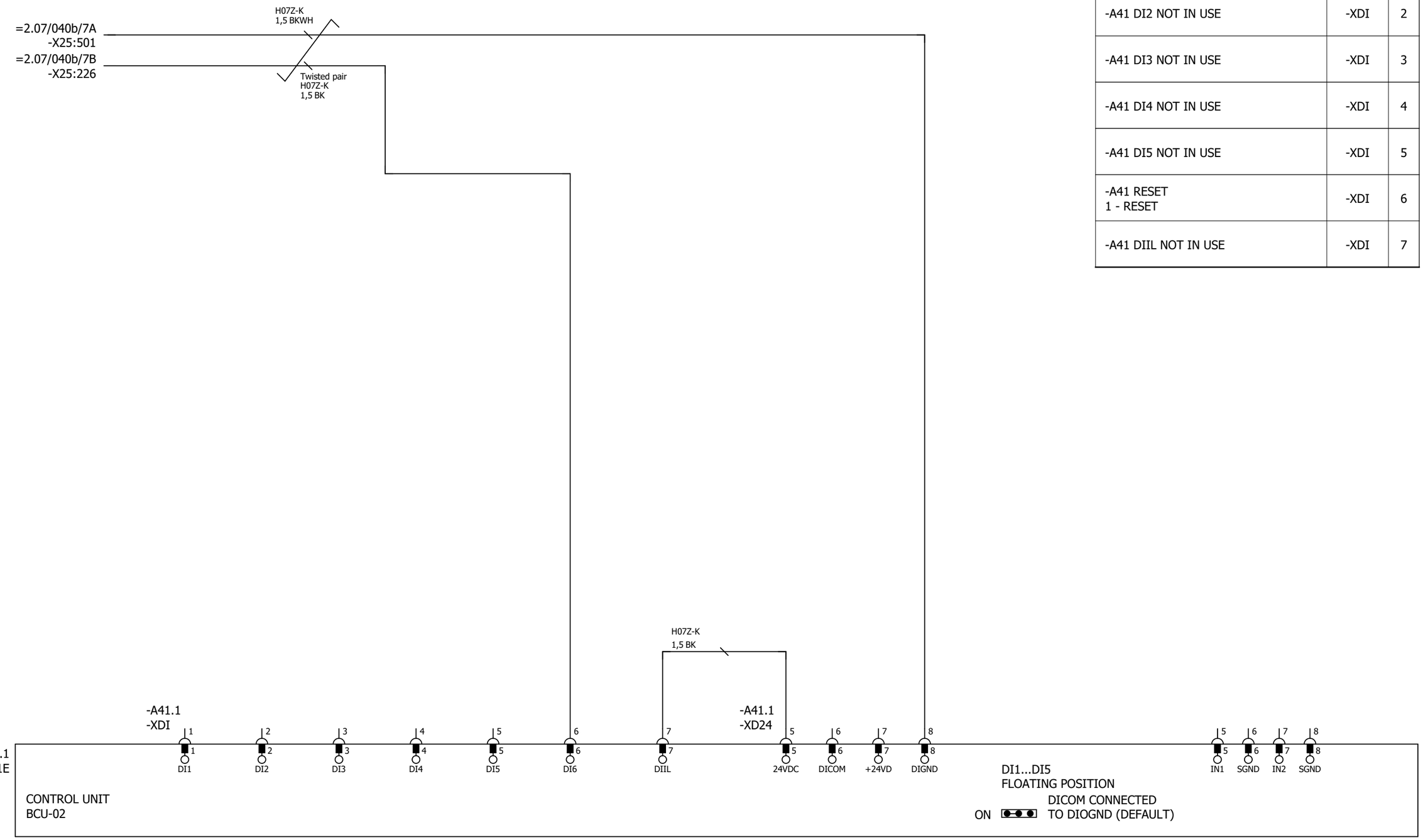

P345812 / 29711

Cust. Doc. No.	Prep. Sky-Xin Zhang 02.08.2023	Title CONTROL BOARD DBU ACS880-607-0500-3 400V	Circuit diagram EFS2
Cust. Ref. No.	App.		SAP Doc. No.
Customer WMMP	Project Zhaka Jack-up Lift System Zhaka Jack-up Lift System-1		EPLAN Doc. No. 3ABDC230674 - 60
			ABB Ref. No.
			Resp. Dept.

Item Des. = 60 + 60.1

Rev. .1 Sheet 040b

Cont. 040c

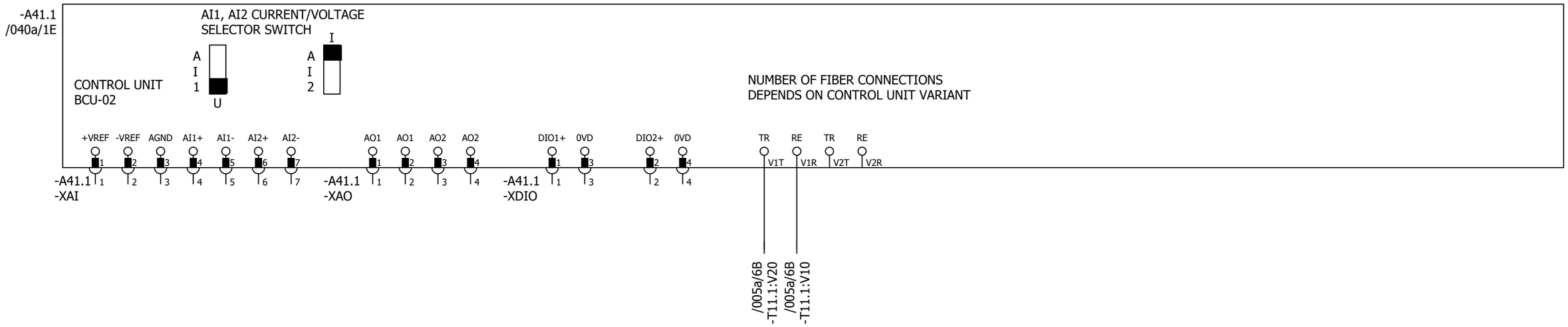

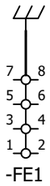

Control and status signals	Terminal	Pin
AI1 NOT IN USE 0(2)...10V	-XAI	4
AI2 NOT SPECIFIED BY DEFAULT NOT IN USE 0(4)...20mA	-XAI	6
AO1 NOT IN USE 0(4)...20mA RL < 500 ohm	-XAO	1
AO2 NOT IN USE 0(4)...20mA 0(4)...MOTOR CURRENT	-XAO	3
DI01 NOT IN USE	-XDIO	1
DI02 NOT IN USE	-XDIO	2

P345812 / 29711

Cust. Doc. No.	Prep. Sky-Xin Zhang 02.08.2023	Title CONTROL BOARD DBU ACS880-607-0500-3 400V	Circuit diagram EFS2
Cust. Ref. No.	App.		SAP Doc. No.
Customer WMMP	Project Zhaka Jack-up Lift System Zhaka Jack-up Lift System-1		EPLAN Doc. No. 3ABDC230674 - 60
			ABB Ref. No.
			Resp. Dept.

Item Des.
= 60
+ 60.1

Rev. .1 Sheet 040c
Cont. 040d

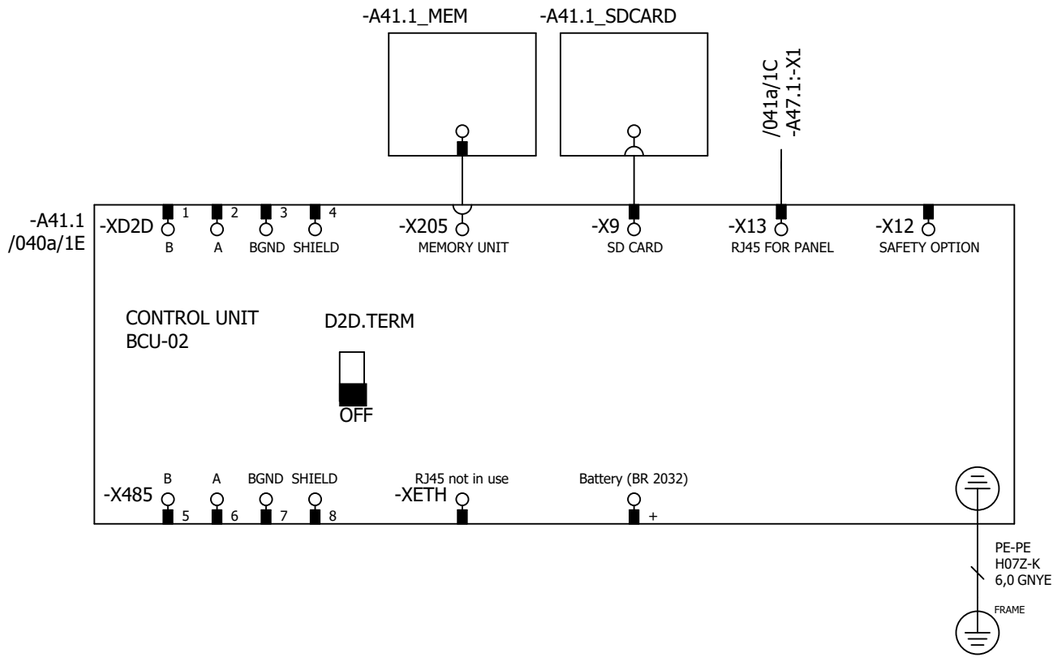

P345812 / 29711

Cust. Doc. No.	Prep. Sky-Xin Zhang 02.08.2023	Title CONTROL BOARD	Circuit diagram EFS2	Item Des.	
Cust. Ref. No.	App.	DBU	SAP Doc. No.	= 60	
Customer WMMP	Project Zhaka Jack-up Lift System	ACS880-607-0500-3	EPLAN Doc. No. 3ABDC230674 - 60	+ 60.1	
	Zhaka Jack-up Lift System-1	400V	ABB Ref. No.	Rev. .1	Sheet 040d
			Resp. Dept.	Cont.	041a

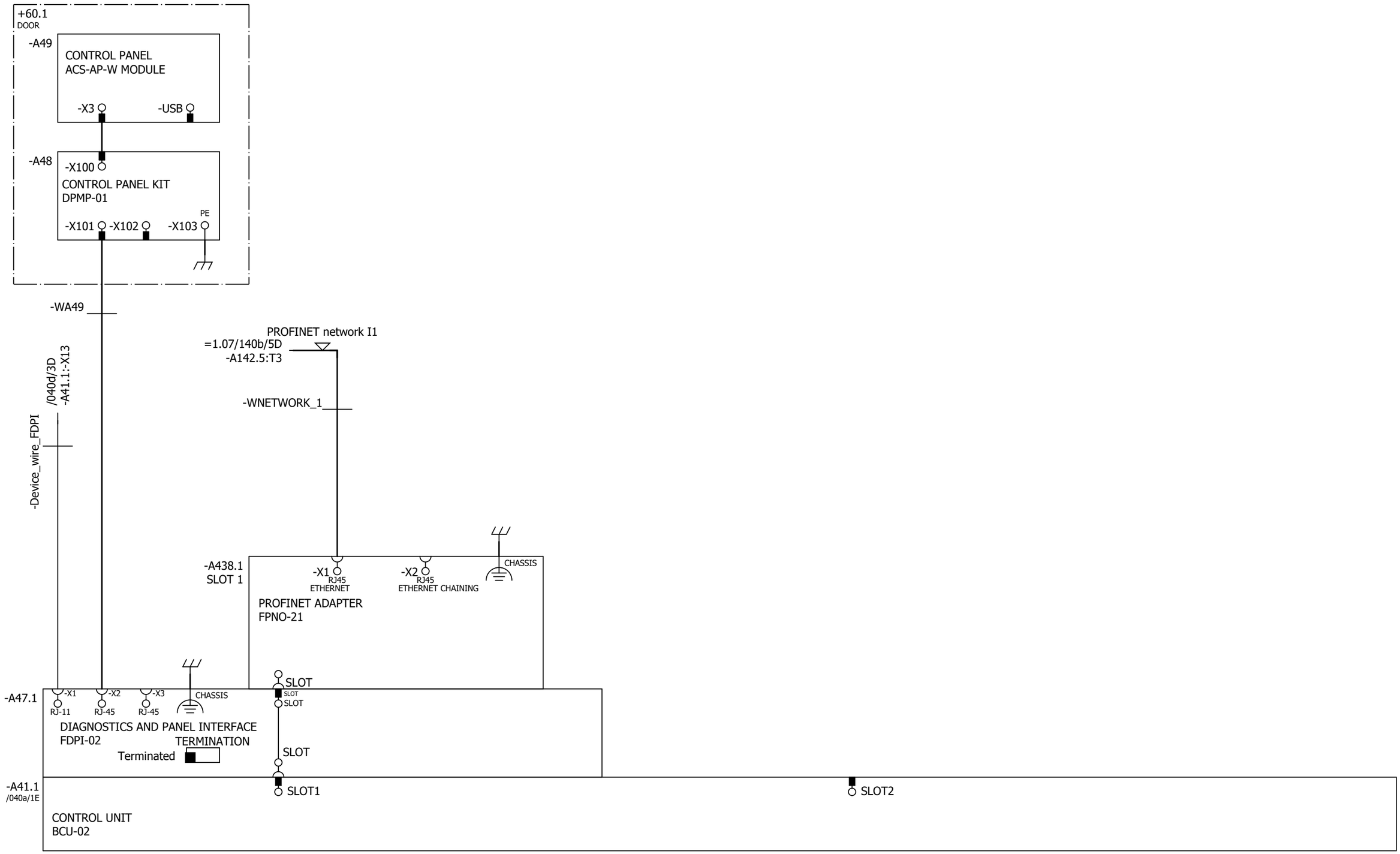

Cust. Doc. No.	Prep. Sky-Xin Zhang 02.08.2023	Title OPTION CARDS	Circuit diagram EFS2	Item Des.	
Cust. Ref. No.	App.	DBU	SAP Doc. No.	= 60	
Customer WMMP	Project Zhaka Jack-up Lift System	ACS880-607-0500-3	EPLAN Doc. No. 3ABDC230674 - 60	+ 60.1	
	Zhaka Jack-up Lift System-1	400V	ABB Ref. No.	Rev. .1	Sheet 041a
			Resp. Dept.	Cont.	041b

P345812 / 29711

-A41.1
/040a/1E

SLOT3

SLOT4

CONTROL UNIT
BCU-02

Cust. Doc. No.	Prep. Sky-Xin Zhang 02.08.2023	Title OPTION CARDS	Circuit diagram EFS2	Item Des.	
Cust. Ref. No.	App.	DBU	SAP Doc. No.	= 60	
Customer WMMP	Project Zhaka Jack-up Lift System	ACS880-607-0500-3	EPLAN Doc. No. 3ABDC230674 - 60	+ 60.1	
	Zhaka Jack-up Lift System-1	400V	ABB Ref. No.	Rev. .1	Sheet 041b
			Resp. Dept.	Cont.	095a

CABINET AND
MODULE HEATING

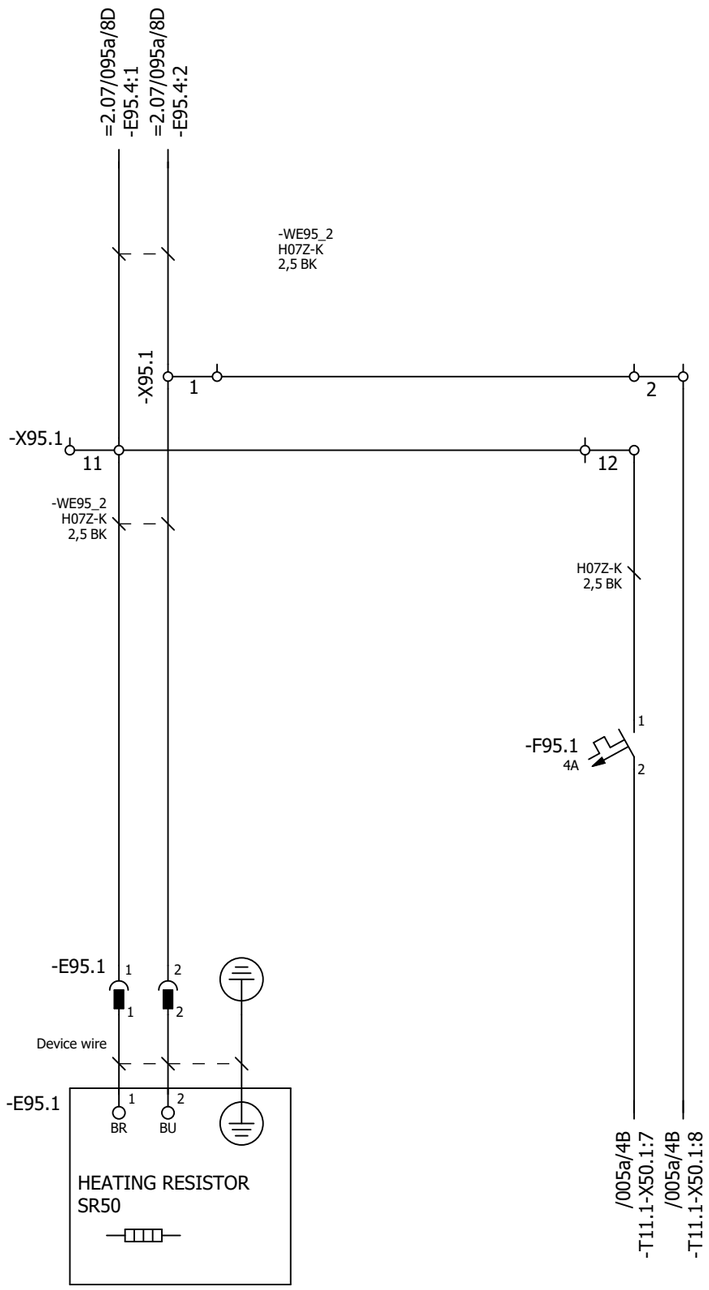

P345812 / 29711

Cust. Doc. No.	Prep. Sky-Xin Zhang 02.08.2023	Title CABINET HEATER	Circuit diagram EFS2	Item Des.	
Cust. Ref. No.	App.	DBU	SAP Doc. No.	= 60	
Customer WMMP	Project Zhaka Jack-up Lift System	ACS880-607-0500-3	EPLAN Doc. No. 3ABDC230674 - 60	+ 60.1	
	Zhaka Jack-up Lift System-1	400V	ABB Ref. No.	Rev. .1	Sheet 095a
			Resp. Dept.	Cont.	&MPC/Part list_1

Part list: 3ABDC230674BU02001

Item	Sort String	Qty.Str	Unit	Component Number	Description and text	Technical data
0010		1.000	ST		ACS880-607-0500-3+A012+B053+C121+C132+C	
0020		1.000	ST		_206+D150+E210+G300+G307+G315+G320+G330+	
0030		1.000	ST		_H352+H367+J400+K492+L509+P913	
0040		1.000	ST		=60	
0050		1.000	ST		+60.1,DBU1	
0060		1.000	ST		DBUMODULE	
0070	-T11.1	1.000	PC	3AUA0000129913-M	ACS880-104-0640A-3+C183+E205+P922	+C183+E205+P922
0080		1.000	ST		FUSES+DC	
0090	-F11.12	1.000	PC	3AFE68335418	HRC FUSE LINK 170M 6410	630A 690V
0100	-F11.14	1.000	PC	3AFE68335418	HRC FUSE LINK 170M 6410	630A 690V
0110		1.000	ST		FUSES-DC	
0120	-F11.11	1.000	PC	3AFE68335418	HRC FUSE LINK 170M 6410	630A 690V
0130	-F11.13	1.000	PC	3AFE68335418	HRC FUSE LINK 170M 6410	630A 690V
0140		1.000	ST		FUSES-DCRESISTORS	
0150	-F11.15	1.000	PC	3AUA0000136232	FUSE 170M6408	500 A;690 V
0160	-F11.16	1.000	PC	3AUA0000136232	FUSE 170M6408	500 A;690 V
0170	-F11.17	1.000	PC	3AUA0000136232	FUSE 170M6408	500 A;690 V
0180		1.000	ST		Auxvoltagedistribution	
0190	-F21.1	1.000	PC	3AFE68264758	PROTECTION SWITCH S 201-K4	4A, 440VAC/60VDC
0200	-F26.1	1.000	PC	3AFE68264651	PROTECTION SWITCH S 201-K2	S 201-K2
0210	-X22.1	1.000	PC	3AXD50000001632	TERMINAL BLOCK AS X22	12 AWG;2 mm2;24 A;800 V
0220	-X25.1	1.000	PC	3AXD50000001609	TERMINAL BLOCK AS X25 (1)	6 AWG;10 mm2;57 A;800 V
0230	-X25.1	1.000	PC	3ABD00609550	ASSEMBLY PLATE FOR X25 TERMINAL	acs880
0240		1.000	ST		24VDCdistribution	
0250	-T22.1	1.000	PC	3ABD00010542	POWER SUPPLY NDR-120-24	24V 5A
0260	-X21.1	1.000	PC	3AXD50000001633	TERMINAL BLOCK AS X21	12 AWG;2 mm2;24 A;800 V
0270		1.000	ST		CONTROLPANEL	
0280	-A47.1	1.000	PC	3AUA0000108650	FIELDBUS KIT FDPI-02	PANEL BUS ADAPTER
0290	-A48	1.000	PC	3AUA0000108878	CONTROL PANEL KIT DPMP-01	DPMP-01
0300	-A49	1.000	PC	3AXD50000025964	CONTROL PANEL ACS-AP-W MODULE	ASSISTANT PANEL WIRELESS CPU1
0310		1.000	ST		CONTROLUNIT	
0320	-A41.1	1.000	PC	3AUA0000110429	CONTROL UNIT BCU-02, MAIN ASSEMBLY	fiber optic links for 2 modules
0330	MEMORY	1.000	PC	3AXD50000006010	MEMORY UNIT KIT ZMU-02	

P345812 / 29711

Cust. Doc. No.	Prep.	Title PART LIST DBU ACS880-607-0500-3 400V	Item Des. = 60 +
Cust. Ref. No.	App.		SAP Doc. No.
Customer WMMP	Project Zhaka Jack-up Lift System Zhaka Jack-up Lift System-1		EPLAN Doc. No. 3ABDC230674 - 60
			ABB Ref. No. / Rev. / Sheet Part list_1
			Resp. Dept. / Cont. Part list_2

Part list: 3ABDC230674BU02001

Item	Sort String	Qty.Str	Unit	Component Number	Description and text	Technical data
0340	SCREW	1.000	PC	3AFE68681481	SCREW K30X10 TORX	PT WN1452 ZN
0350	SOFTWARE	1.000	PC	3AXD50000021336	SOFTWARE DBU CONTROL PROGRAM	ABCF2 for BCU-X2
0360		1.000	ST		Cabinetheaters	
0370	-E95.1	1.000	PC	3AFE09827498	HEATING EQUIPMENT SR50	HEATER 50W/220V(110-270VACDC)
0380	(-E95.1)	1.000	PC	3AUA0000066694	CONNECTOR SSL2.5 3043815	LOCKING ELEMENTS FOR ST-COMBI CONNECTOR
0390	(-E95.1)	1.000	PC	3AXD50000007033	CONNECTOR SC 2,5/ 2	2,50 mm2;24 A;500 V;2-POS. MALE
0400	(-E95.1)	1.000	PC	3AXD50000010133	ASSEMBLY PLATE HEATER	STEEL HDG 1,0;DEGREAS CLEAN
0410	(-E95.1)	1.000	PC	3AXD50000010509	ASSEMBLY DRAWING HEATER 50 AND 100W	
0420	-F95.1	1.000	PC	3AFE68264758	PROTECTION SWITCH S 201-K4	4A, 440VAC/60VDC
0430	-WE95_2	1.000	PC	3AXD50000010441	WIRE HARNESS SET_HP_E95_FRAME_V2	__ - E95
0440	-X95.1	1.000	PC	3AXD50000019251	TERMINAL BLOCK AS 600 V;28 A;4 mm2;12 AW	X95._
0450		1.000	ST		DBUMODULETERMINAL	
0460	-X50.1	1.000	PC	3AUA0000059813	CONNECTOR STV S 9 SB	9 POLES, 32A 500V 6KV/3 (FEMALE)
0470		1.000	ST		FIELDBUS	
0480	-A438.1	1.000	PC	3AXD50000192779	OPTION MODULE FPNO-21	PROFINET IO

P345812 / 29711

Cust. Doc. No.	Prep.	Title PART LIST DBU ACS880-607-0500-3 400V	Item Des. = 60 +
Cust. Ref. No.	App.		SAP Doc. No.
Customer WMMP	Project Zhaka Jack-up Lift System Zhaka Jack-up Lift System-1		EPLAN Doc. No. 3ABDC230674 - 60
			ABB Ref. No. / Rev. / Sheet Part list_2
			Resp. Dept. / Cont. &EMA/1

0422PTS28A-1-03-31400WG

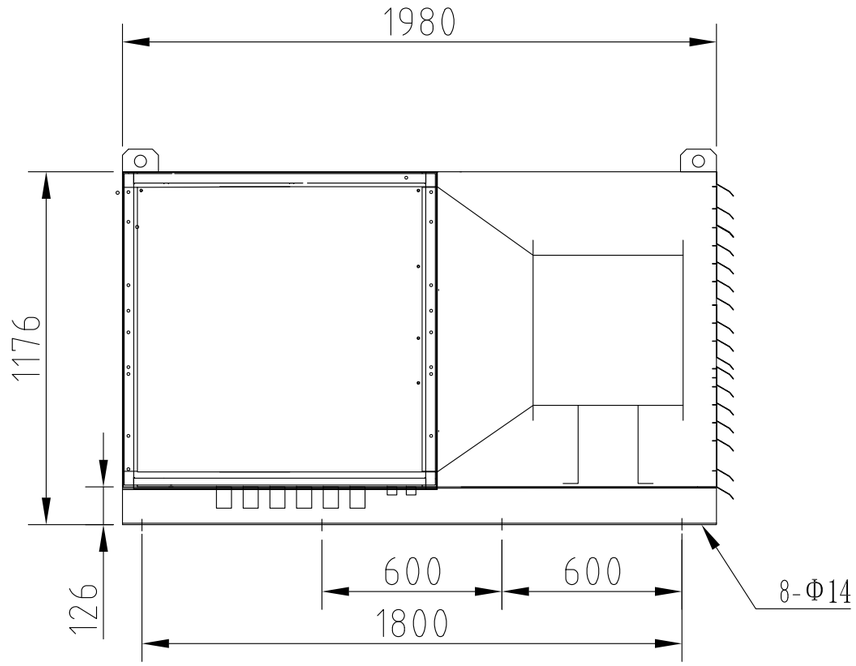

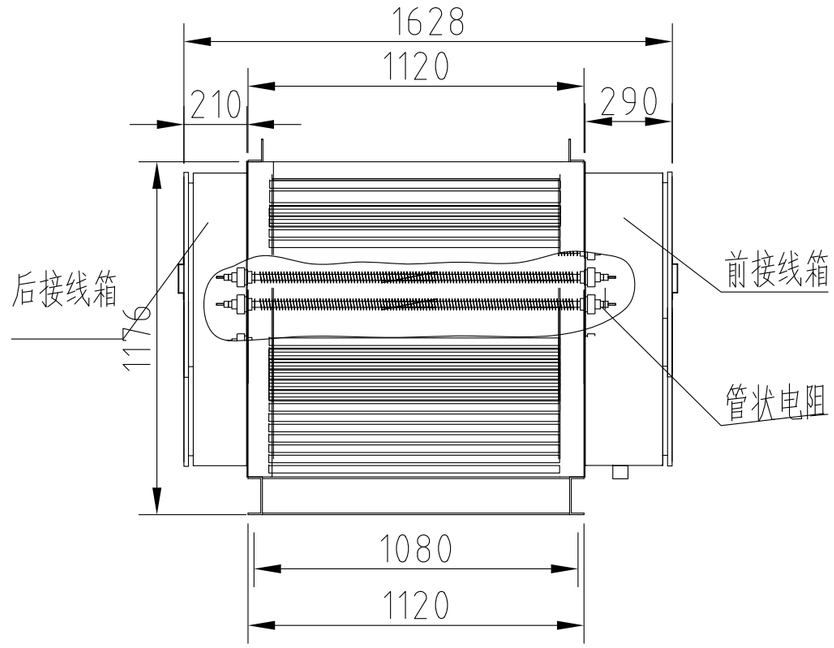

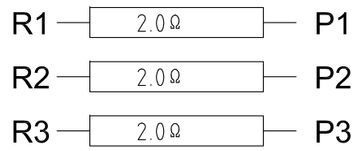

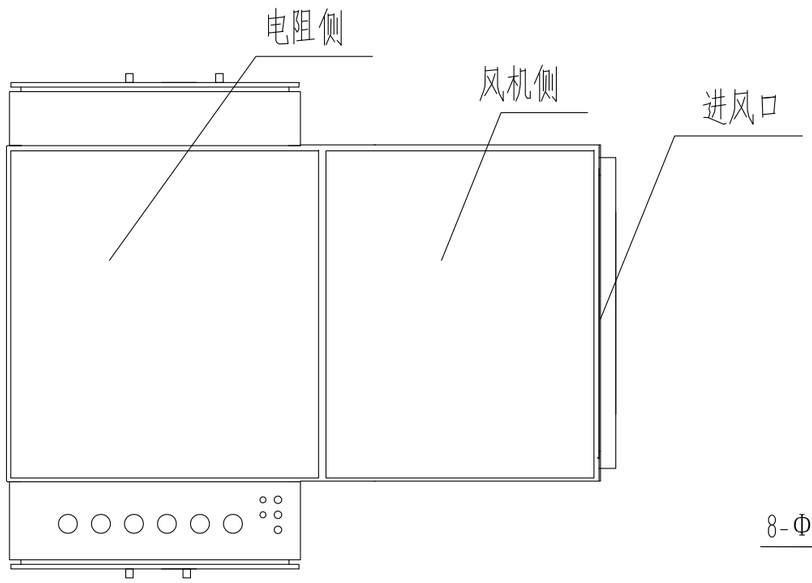

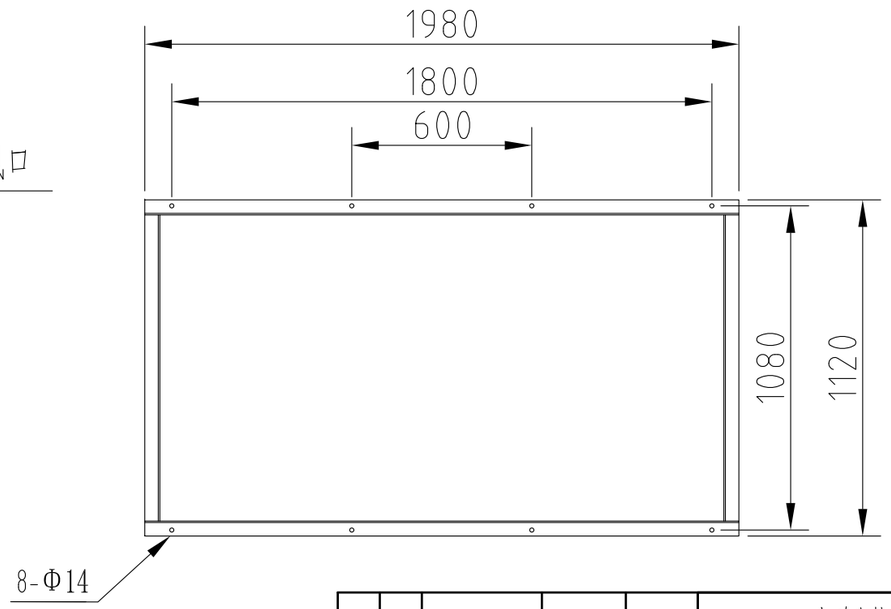

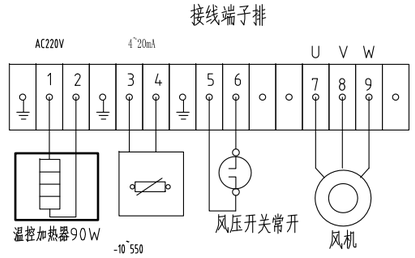

带电部分防护等级：IP56
材质：不锈钢316
冷却方式：强迫风冷
重量：720KG

设计								
校对								
审核								
设计	艺							
校对	准							
审核	准							
工艺	准							
标准	准							
批准								

标记	数量	修改单号	签字	日期
设计				
校核				
审核				
标检				
审定				
批准				

1320T电动齿轮齿条升降系统

制动电阻柜

所属装配图号	0422PTS28A-1-03-00WG
图号	0422PTS28A-1-03-31400WG
标记	S
版本	
重量	
比例	1:20
共 1 页	第 1 页

WMMP 武汉船用机械有限责任公司

资料编号：HJ/Y-PTS28A-1-03-AZ-WG

安装说明书

海洋平台电动升降系统

电气遥控系统

简介

本安装说明书的目的是对于海洋平台电动升降系统电气遥控系统部件的安装在安装位置、环境、维护方面给予指导。

船厂应对设备的安装及有条件地应用这些指导、保证系统的正常功能负责。

请确保本文件，分发到所有相关部门。

综 述

安装设计时，应充分考虑电控系统部件的安装、使用和维护空间。

到达检查

货物到达后应立即开箱检查，如有问题应该尽快通知制造厂。

电控设备的维护

— 贮存

设备应该贮存在干燥、恒温的地方，防止潮气和冷凝，更应该防止损坏和灰尘。

必须用正确的方式保存设备。

— 安装期

安装设备时，不能连接电源。电缆应该尽可能晚的安装，电源在最后接入。控制柜应该密封好(门关上，封盖合上)，以防止杂质进入柜体内。

当周围进行打磨工作时，应确保尘埃不能进入控制箱体内和面板的按钮触点处。当周围进行油漆工作时，应盖好设备。

有机械损伤危险时，应该进行特殊的保护，以防止设备被损坏。

安装完后，在起动前，应该检查和清洁各柜体单元。

注：柜体在舱内必须做好防护（防尘防水）。

— 供 电

电气遥控系统的供电电源为单相交流 220V±10%，50Hz 电源。电源必须取自高优先级的网络，以确保系统不受危害。当系统的电源取自两个馈电装置时，该馈电装置必须连接到自动转换开关上。到遥控系统的每条馈电线上必须有断路器能手动断开电源。

变频驱动柜的电源为 AC 400V±10%，50Hz。每条桩腿设置 12 台电机，4 个桩腿一共 48 台电机，每台电机额定功率 22kW。电机动力电源必须取自高优先级的网络，且电源容量满足电机使用要求，以确保电机工作正常。

移相变压器的初级电源为 AC 690V±10%，50Hz，次级电源为 AC400V，50HZ，预充磁变压器的电源为 AC 690V±10%，50HZ。每条桩腿有一台移相变压器和一台预充磁变压器为桩腿供电，平台配电板负责为升降系统的移相变压器送电，确保升降系统的正常工作。

在我们的服务人员检查前，系统不要通电。

控制柜

遥控系统的中央控制台(防护等级 IP23)安装于升降驾驶室，最大环境温度45℃，最大允许湿度(无冷凝)100%。

遥控系统的其他控制单元，如桩腿控制单元、变频驱动柜、电源箱，安装在平台主甲板下靠近升降桩腿的空调房内，要求空调房内最大温度 40℃，且无凝露、无腐蚀、无滴水。以上所有控制单元柜体必须垂直安装，由船厂设计底座进行安装，底座应通过地脚螺栓或其他方式固定于地面，保证所安装柜体在正常使用过程中不会发生松动和倾斜，影响设备的正常使用。

对于有气流从上下方向进出的柜体，如变频电源柜，需安装后的控制单元柜体底部距地面保持一定的距离(80mm 以上)，安装底座与柜体的安装面为镂空，以保证气流正常从柜体底部进入，柜体顶部应与舱室顶部保持 400mm 以上距离，且不允许其他物体占据柜体顶部到舱室顶部的空间，以保证气流正常从柜体流出形成气流循环通道。如果进出变频电源柜的气流被堵塞将会影响该设备的正常使用，进入变频电源柜柜体的气流温度不能超过设备最高使用温度 40℃。

对于其他部位安装有通风装置的控制单元柜体，如柜体背部设置有通风进风口和散热风扇，安装时应注意柜体与舱室墙壁保持一定距离，以保证正常通风散热。安装于同一舱室内的控制单元柜体注意相互之间保持一定的距离，避免相互干扰，同时对于需要从背面进行维护的柜体，在安装时应在其四周留出维修通道，便于及时对设备进行维护。

以上遥控系统的所有控制单元不应安装在无线电发射机、无线电天线或来自高强度无线电信号场或对电子设备有干扰的地方，例如发射机房等。

电控系统各单元柜体与船体应该有良好的接地，必须做到以下几点：

- 船体金属表面除锈，去保护层，用螺纹接头与船体相连；
- 如用一根地线连接船体与控制单元柜体，该地线应尽可能的短，并采用多芯导线；
- 地线两端用电缆接头做成端子，并分别固定于柜体和船体，保证连接牢固。

以上电控系统各单元柜体在安装时应考虑使用的方便性，应确保柜体门能够打开至少 90 度，柜体打开柜门时相互之间不受影响。

以上电控系统各单元柜体应安装在振动最小的地方。如有危险振动，超过IEC60068-2-6 标准所述范围，应装减振元件。

电 缆

电缆图中的船用电缆不由 WMMP 提供，所有电缆由船厂提供。系统图和电缆连接图中给出了电控系统连接电缆的参考规格，所有的电缆必须满足船用要求和入级船级社的规范。交流输入电源电缆最好使用屏蔽电缆，以减少对其它电气设备的干扰。另外，电缆选型必须考虑电缆长度和电源类型导致的电缆压降，以满足船级社规范要求为准。

变频电源柜选用的电源电缆应满足以下要求：

- 带 XLPE 绝缘的 3 芯镀锡铜导线；
- 铜编织层/铝箔混合屏蔽和镀锡导线；
- PVC 套管；
- 绝缘厚度必须等于或大于 15 密耳(0.4 毫米/0.015 英寸)；
- 在导线和绝缘层的同心度方面，导线质量不应有大的差别。

各导线之间的物理关系对变频器安装起着重要作用。导线管或电缆槽中各导线没有固定关系，具有固定几何形状的电缆(即将各导线的间距和方位保持恒定的电缆)具有比松散的导线更突出的优点，包括可减少交叉耦合噪声和绝缘应力。因此，应将变频电源柜的电缆按照一定的顺序和方位进行固定。

对于连接传感器和编码器的电缆，推荐使用带铜导线的屏蔽型电缆，绝缘等级为 300V 或更高。模拟信号线应与电源线分开，间距至少 0.3m。建议在独立的导线管中敷设编码器电缆。如果信号电缆必须与电源电缆交叉，则以直角相交。按编码器或模拟信号设备厂商建议，端接屏蔽型电缆的屏蔽层。

不同电压等级信号的电缆应分开敷设以避免干扰。其他设备的 110V 或更高电压等级的电缆或有产生高 EMI 信号的电缆不能与遥控系统控制信号电缆不能敷设在一起。为了防止干扰，不同电压等级的电缆应该分开敷设，110V 或更高电压等级的电缆，带有高的电磁干扰，应该与控制信号电缆分开敷设。

电缆图中标明的电缆截面为最小值，所有电缆都为船用电缆，应符合相关规范的要求。具体应根据相关规范的要求。所用电缆应避免拼接。

应安装电缆固定件，以防止电缆受到机械损伤。各单元之间的连接应采用屏蔽电缆，屏蔽层有效面积不低于 85%。对于单层屏蔽电缆，至少电缆两端的屏蔽层应连接到船体。若为双层屏蔽电缆其电缆两端外屏蔽层应连至船体(法拉第屏蔽)，内屏蔽层以最短的方式连接到船体“控制单元端”上。

敷设电缆时，电缆不能随意布置，电缆应该放置于电缆槽中。变频电源柜等控制单元的电力线应当捆束在一起，锚定在电缆槽中。不同设备的电缆束之间应当维持一定的间距，同一设备的控制电缆和电源电缆之间至少相距 0.3m。

网络通讯电缆必须与其他电缆很好的分开敷设。

工业以太网总线电缆应满足以下要求(20℃)：

- 采用标准的 8 芯工业屏蔽船用以太网电缆；
- 特征阻抗 100Ω；
- 10MHz 时衰减 6db/100m；
- 100MHz 时衰减 22db/100m；
- 耦合电阻：10MHz 时≤10mΩ/m；
- 回路电阻：≤120Ω/kms；
- 绝缘电阻：≥500MΩ/km；
- 总线电缆接头：工业屏蔽 RJ-45 接头。

以太网电缆接头 RJ45 要求满足 IP67 标准并适用于使用环境，电缆还应在工业温度时满足 TIA/EIA 标准。

以太网总线电缆连接至设备时按下图连接：

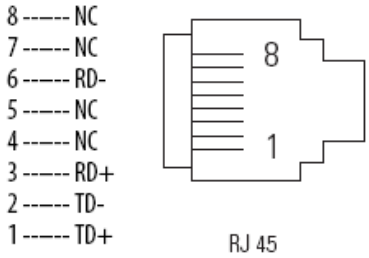

光缆的具体技术要求为：

- 62.5/125μm 或 50/125μm 多模玻璃光纤；
- 波长 1310nm；
- 渐变折射率光纤；
- 工作方式为单工或双工；
- IEC 60794-1-1、IEC 60793-2-10 A1 类光纤；

各柜体的光缆连接包括光缆及附件，附件内容包括：光纤接线盒、光纤接头和光纤跳线；其中光纤跳线有两端，其中与升降系统的接头为 **ST** 接头，另外一头与光纤接线盒匹配即可。

光纤敷设时最大允许长度为 1km。

注：上述光纤及附件不由 WMMP 提供。

变频驱动柜的安装

变频驱动柜的安装和接线详见《舾装说明书》的变频驱动柜部分。

移相变压器的安装

系统移相变压器和制动电阻均为强迫风冷冷却，因此，移相变压器安装在平台舱室内，且不要离变频驱动柜太远，距离最好＜100 米，以便现场的接线和减少因电缆压降和阻抗对设备性能的影响。

制动电阻柜散热量较大，可以放置在室外或通风良好的舱室内。制动电阻柜接线部分防护等级为 IP56。

电机的接线

连接电机使用的电缆须为船用三相屏蔽变频电缆，电机额定电压 380V，额定电流约 46A，所用电缆须满足电机电流、电压的要求。电缆须按电缆连接图的要求正确连接电机，并确保电机三级连接正确。

电机的排列序号按照前述方式进行确定，连接电机与变频器时务必确保电机顺序的正确性。

所有连接电机的电缆须用扎带固定于固桩架上，有序排列。电机接线时电机与变频器之间电缆的长度不能超过变频器的允许范围，否则影响到变频器对电机的正常控制功能。

绝对值编码器的安装与接线

绝对值编码器在安装时尽量选用柔性联轴器，柔性联轴器可保证在安装角度存在偏差的情况下(误差允许范围内的偏差)，以及编码器轴与机械轴存在平行偏移量的情况下(误差允许范围内的偏移量)，轴编码器可正常工作。如不选用柔性联轴器，编码器轴与机械轴联接过紧，将导致编码器轴轴承故障或机械轴轴承故障。

安装绝对值编码器时注意：先利用柔性联轴器连接编码器和机械轴(不要连接过紧)，再用合适的螺丝钉将编码器稍固定于安装面板上(不要拧紧)，将编码器进行调整，保证编码器轴与机械轴具有较好的同轴性，再将螺丝钉和联轴器固定锁紧。

绝对值编码器背部设置 3 组接头，其中 1 组为供电线接头，2 组为数据通信线接头。务必按照要求进行编码器接线，接线错误可能导致编码器的损坏。

绝对值编码器供电接头为：1-Vs(棕，10-30V DC)，2-(白，不用)，3-GND(蓝，接地)，4-(黑，不用)。

绝对值编码器数据通信接头为：1-TXD+(白橙)，2-RXD+(白绿)，3-TXD-(橙)，4-RXD-(绿)。

为保证绝对值编码器的正常工作不受影响，推荐将编码器的外壳进行接地处理。

系统各单元之间的连接

各控制单元通过箱体底部进线，即电缆屏蔽层能很好的连接到各单元的箱体。电缆屏蔽层应很好的接地。

接近控制面板的连接电缆应留有足够的长度，以便维护时能移动面板而不断开导线连接。

电缆端头必须仔细剥离，导体芯线无损伤，所有绝缘物去除，端子螺钉必须紧固。电缆的连接应该尽可能采用电缆接头。如未用，则电缆芯线应小心拧合后，使得端子间无接触，不能造成端子间的短路。之后，在交船前必须检查紧固螺钉。

其 它

各控制柜为落地式安装。

用于室内安装的电气设备，其防护等级为 IP22 或 IP22 以上。

用于室外安装的电气设备，其防护等级为 IP56。

船　东：
SHIP OWNER：
船　厂：
SHIPYARD：　QingDao Haixi Heavy Duty Machinery Co.Ltd
船　号：
HULL NO：　HX2330/HX2331
船　型：
SHIPTYPE：　TYPE-3 Self-Elevating Unit
船　级：
RULE：　ABS
工程编号：
PROJECT NO：　平台升 28A-1 /2

升降系统

JACKING　SYSTEM

电 气 部 分

ELECTRIC　EQUIPMENT

完　工　图

APPROVAL　DRAWING

型 号:
TYPE:

编　制 EDITED			FILE NO	HJ/Y-PTS28A-1-03WG
校　核 CHECKED			共　417　页　　第　1　页	
审　核 AUDITED			备　注 REMARK	
批　准 APPROVED			版本/Revision:	

武汉船用机械有限责任公司
WMMP WUHAN MARINE MACHINERY PLANT CO., LTD.

地址：中国湖北省武汉市青山区武东街九号
Add: NO. 9Wudong Street Qingshan Wuhan HuBei China
Fax：（027）68867461　　Tel：（027）68867189
E-mail：whcj@wmmp.com.cn　Code：430084

CONTENTS

NO.	Name	Drawing number	Pages	Remarks
1.	Electric System Declaration	HJ/Y-PTS28A-1-03-SM	6	
2.	Electric System	0422PTS28A-1-03-00	1	
3.	System spare List	0422PTS28A-1-03-07	1	
4.	Electrical System Block Dwg	0422PTS28A-1-03-08	8	
5.	Electric System Cable Connection Dwg.	0422PTS28A-1-03-09	18	
6.	Distribution Single Line Dwg.	0422PTS28A-1-03-10	2	
7.	Control Network Topology	0422PTS28A-1-03-12	1	
8.	Central Control Station	0422PTS28A-1-03-11100	2	
9.	Central Control Station Circuit Dwg.	0422PTS28A-1-03-11101	8	
10.	Local Control Box	0422PTS28A-1-03-11200	1	
11.	Local Control Box Circuit Dwg.	0422PTS28A-1-03-11201	1	
12.	Leg Control Unit	0422PTS28A-1-03-12100	1	
13.	Leg Control Unit Circuit Dwg.	0422PTS28A-1-03-12101	18	
14.	Leg Junction Box	0422PTS28A-1-03-12200	1	
15.	Power Cabinet	0422PTS28A-1-03-31100	1	
16.	Power Cabinet Circuit Dwg.	0422PTS28A-1-03-31101	1	
17.	Phase-shifting Transformer	0422PTS28A-1-03-31200	4	
18.	Variable Frequency Source Cabinet	0422PTS28A-1-03-31300	341	
19.	Brake Resistance Cabinet	0422PTS28A-1-03-31400	1	
20.	Electric System Installation Specification	HJ/Y-PTS28A-1-03-AZ	6	

Date：2024-6-7

Document number：HJ/Y-PTS28A-1-03-SM

Electric System Declaration

The entire control system is based on PLC control, used for Electric Rack And Pinion Jacking System. The lifting units of each lifting device on this platform are driven by frequency converters.

The lifting units can achieve the lifting and lowering actions of the platform and pile legs at the centralized control Station and the control box next to each pile leg machine.

1. Composition of electrical department

No	Name	Quantity	Protection degree	Installation position	Notes
1	Central Control Station	1	IP23	pilothouse	
2	Leg Control Unit	4	IP44	air-conditioned rooms	
3	Local Control Box	4	IP56	board	
4	Phase-shifting Transformer	2	IP44	cabin	The pre-magnetized transformer is separately configured by the distribution board
5	Variable Frequency Source Cabinet	2	IP22	air-conditioned rooms	
6	Power Cabinet	2	IP44	cabin	
7	Brake Resistance Cabinet	2	IP56	board	
8	Absolute Value Encoder	8	IP56	top of mounting bracket	

9	Leg Junction Box	8	IP56	board	
10	Overspeed Switch	4	IP56	motor tail	

2. Major function

2.1 Central Control Station

- Emergency stop function

After pressing the emergency stop button, expect for the PLC power source, all power and control power sources lose power, and the electromagnetic brake is locked.

- Lifting function

Control the lifting and lowering of the four legs of the platform. Each leg can be linked and single acting.

- Precompression function

Active precompression of legs through diagonal active lifting platform.

- Single lifting unit load adjustment function

By adjusting the load of the lifting unit, avoid the lifting unit being loaded.

- Platform tilt protection function

The electronic inclinometer measures the platform's tilt angle in real-time, and there is a dedicated display screen on the centralized control panel that displays the platform's horizontal status. When the tilt angle of the platform exceeds the predetermined range, an automatic alarm will be triggered to stop the lifting operation and prompt for manual intervention and adjustment. The bubble type inclinometer is installed on the centralized control console as a backup for electronic level malfunctions.

- Tilt ignore function

During the lifting process of the ship's platform, if it is necessary to operate beyond the specified inclination angle or if the electronic inclinometer fails, the inclination protection ignore function can be used. At this time, the electronic inclinometer is no longer involved in control. Manually observe the bubble type inclinometer on the centralized console to determine the tilt status of the platform. When this function is used, the equipment is in an unprotected state and belongs to

dangerous operation. During operation, there must be a dedicated person on the side of each pile leg and at the bubble type inclinometer to observe the state, and the communication state must be kept smooth.

- Parameter settings and display function

Provide setting functions for maximum load alarm point, starting height automatic lifting height, and other parameters through the touch screen. And display the process data during the platform lifting process, including the load display of each small gear during the platform lifting process, pile leg lifting height display, platform tilt angle display, pile leg speed display, motor speed and power display, ect.

- Emphasis on inquiry function

Ask the power distribution board if it is possible to raise or lower the system action

- Common control display and fault alarm function
- Control permission switching function

The central console has the highest control authority. When the authority is on the central console, it cannot be operated by the machine and can only be monitored. After switching permissions from the central cansole to the pile edge, permissions will only be switched to the pile edge when the confirm button is pressed by the pile edge. Otherwise, permissions will still be on the central console. In addition, permission switching is only possible when the pile leg action stops, otherwise permission switching is invalid.

- Automatic lubrication control function

The default of the system is that when the leg is lifted and lowered, the automatic lubrication will automatically spray lubricating grease according to the set frequency. In addition, there is a separate interface in the touch screen of the lifting system,where operators can manually control the start and stop of automatic for each pile leg.

2.2 Local Control Box

- Single leg lifting control

Using buttons to achieve the lifting and stopping of a single leg.

- Display function

Display various motion states, leg displacement, and platform horizontal posture through the touch screen.

- Emergency stop function

Realized through the emergency stop button, with the same function as the central control station.

- Alarm function

Fault alarm is achieved through indicator lights, buzzers, etc.

- Electromagnetic brake control function

Realize the opening and closing functions of each electromagnetic brake on the leg by selecting switches and buttons.

2.3 Protect

The security points for this project are shown in the table below.

No	Alarm point	Alarm measure		Protect measure			Note
		Independent Alarm indicator light	Touch screen	Only alarm	Stop Lifting action	Cut off The power source	
1	Emergency stop	●	●		●	●	
2	Platform tilt warning		●	●			0.3°
3	Platform tilt exceeding limit		●		●		0.5°
4	Electronic level malfunction		●		●		
5	Inverter fault		●		●		Include overload, overvoltage, broken items, overheating, etc
6	Motor overheating		●		●		Each motor Alarms separately

7	Motor overcurrent		●		●		Each motor Alarms separately
8	Electromagnetic Brake limit wear		●	●			If the number exceeds 3 before starting the motor, it is not allowed to start.
9	Electromagnetic brake failure		●		●		Comprehensive judgment of each brake leg
10	Electromagnetic brake coil high temperature		●	●			
11	Pinion load imbalance warning		●	●			
12	Pinion load imbalance halt		●		●		
13	Single pinion overload		●		●		Each pinion is individually
14	Leg overload		●		●		
15	Leg upper limit		●		●		Platform cannot rise
16	Leg lower limit		●		●		Platform cannot descend
17	Motor overspeed		●		●		Motor speed exceeds 10%
18	Comprehensive failure of lubrication system		●	●			
19	Low level of lubrication system		●	●			
20	Network communication		●		●		
21	CPU fault		●		●		

22	Abnormal lifting unit speed		●		●		
23	Phase shifting transformer winding high temperature alarm		●	●			
24	Phase shifting transformer winding high temperature halt		●		●		
25	High temperature alarm of brake resistor		●	●			
26	High temperature halt of brake resistor		●		●		

3. Interface

3.1 Interface description

Analog signal：

- The analog signal received by the WMMP system is isolated and received by the WMMP system.
- The analog signal output by the WMMP system is isolated and received by the receiving system.

Switching signal:

- The switch signal received by the WMMP system is required to be a passive contact signal with a contact capacity of 250VAC,2A.
- The switch signal output by the WMMP system is required to be a passive contact signal with a contact capacity of 250VAC,2A.

3.2 Electric Rack And Pinion Jacking System and platform distribution board interface

Electric Rack And Pinion Jacking System output to platform distribution board(single leg is configured as follows, and the signal type is hold signal）

- One passive contact: contact closure = inquiry on the reinstallation of the lifting system
- One passive contact: contact closure = inquiry about the lifting system

The platform distribution board outputs to Electric Rack And Pinion Jacking System(single leg is configured as follows, and the signal type is holding signal).

- One passive contact: contact closure = the lifting system allows activation

The specific timing chart is as follows

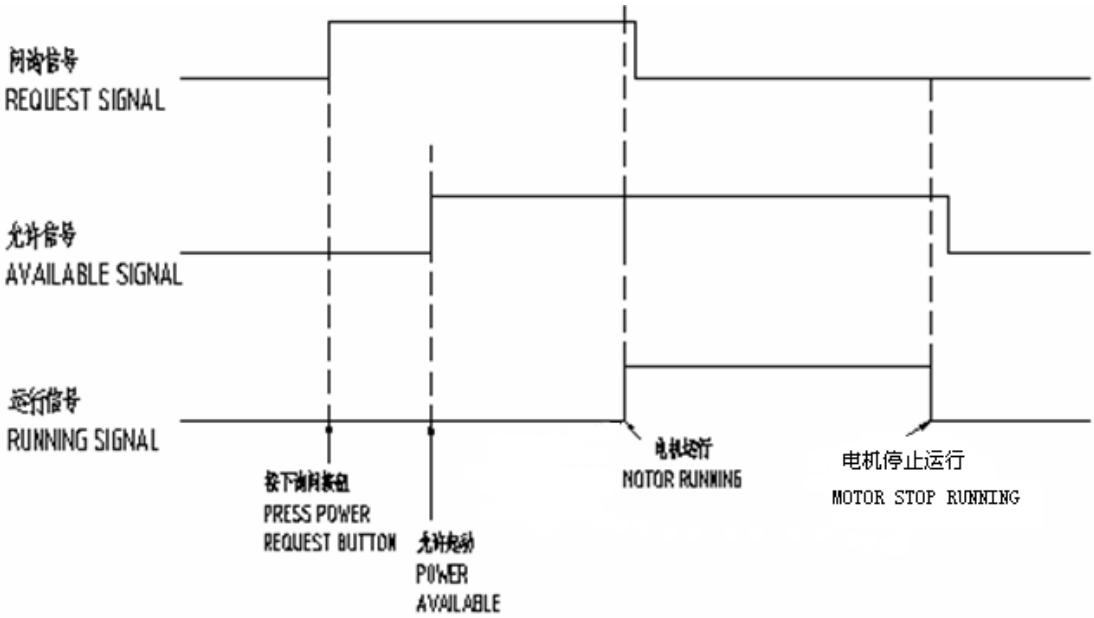

3.3 Electric Rack And Pinion Jacking System interface with other platforms

1、Interface between lifting system and ship automatic monitoring system

Provide one alarm signal leg to the AMS system, passive bottoming, contact open corresponding leg comprehensive fault alarm

2、Interface between lifting system and DP system

Each leg provides a 4-20mA leg length signal to the DP system;

Provide one bottoming signal leg to the DP system, passive bottoming, contact closed leg touching bottom;

3.4 power interface

The power source for the lifting system is provided by the platform distribution board, and the pre magnetization control of each phase shifting transformer is the responsibility of the distribution board. The lifting system provides phase shifting transformers, and the specific power interface is as follows.

<table>
<tr><th>No</th><th colspan="2">Name</th><th colspan="2">Interface</th><th>Notes</th></tr>
<tr><td>1</td><td colspan="2">Main transformer power source</td><td>AC690V 50HZ</td><td>2channel</td><td>Power per channel ≤530KW</td></tr>
<tr><td rowspan="3">2</td><td rowspan="3">Power cabinet</td><td>Lubrication system power supply</td><td rowspan="3">AC400V 50HZ</td><td rowspan="3">2channel</td><td rowspan="3">Power per channel ≤15KW</td></tr>
<tr><td>Phase shifted transform cooling fan power supply</td></tr>
<tr><td>Power supply for brake resistor cooling fan</td></tr>
<tr><td rowspan="2">3</td><td colspan="2" rowspan="2">Control source</td><td rowspan="2">AC220V 50HZ</td><td>4channel</td><td>Leg Power per channel≤3KW</td></tr>
<tr><td>1channel</td><td>Central control Station Power per channel≤1KW</td></tr>
</table>

3.5 Cable interface

The cables numbered in the electrical system block dwg (0422PTS28A-1-03-08) are provided and installed by the shipyard，The cable specifications in the electrical system block dwg are for the shipyard's reference，When selecting cables, the shipyard should consider the range of the stuffing box's bayonet(the rang of each stuffing box's bayonet is specified in the working drawing after the shipyard provides a list of cable outer diameters)

Note: For specific wiring of system cables, please refer to electric system cable connection dwg, drawing No：0422PTS28A-1-03-09”

3.5 Description of phase-shifting transformer and pre magnetizing transformer

The pre magnetized transformer is built-in to the phase-shifting transformer, and its power source and control are completed by the distribution board. After the pre magnetized transformer is completes, it is allowed to power the phase-shifting transformer.In order to avoid long-term power supply to the secondary side of the premagnetizing tansformer after the main transformer works normally,the wire from the secondary coil of the main transformer cannot be directly connected inside the transformer. It is necessary to lead the secondary side of the premagnetizing transformer to the control circuit of the distribution board.

0422PTS28A-1-03-00

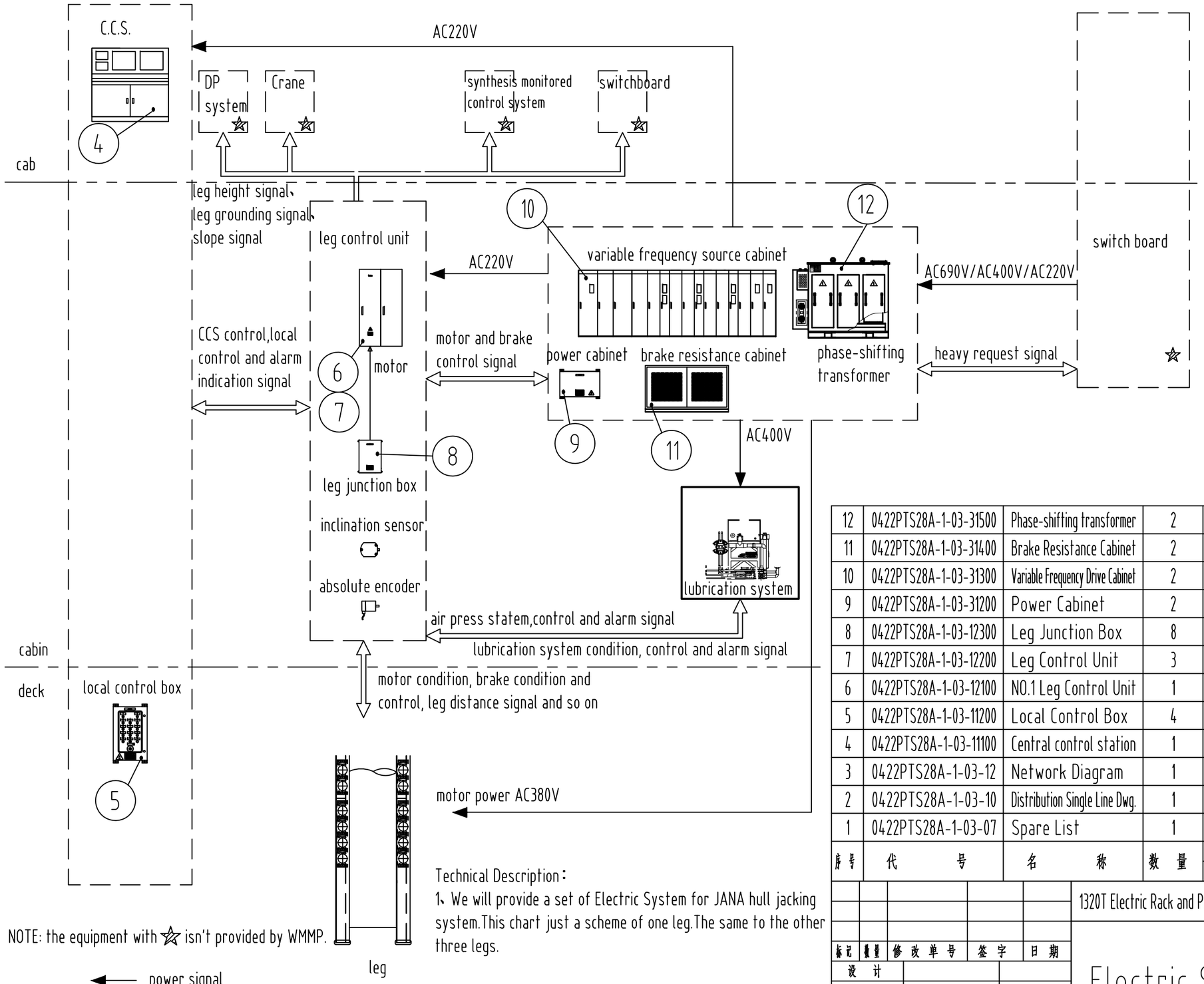

NOTE: the equipment with ☆ isn't provided by WMMP.

Technical Description:

1、We will provide a set of Electric System for JANA hull jacking system.This chart just a scheme of one leg.The same to the other three legs.

main technical parameters	
classification society	ABS
source	main source: AC690V,3P,50HZ
	power cabinet: AC400V,3P,50HZ
	control source: AC220V,1P,50HZ
ambient temperature	0℃-50℃
drive method	VFD drive
motor quantity	12 sets/leg, in total: 48
motor power	22KW
control system	distribution control
explosion-proof request	blank
IP degree	outside: not less than IP56
	inside: not less than IP22
communication	PROFINET/IO

序号	代号	名称	数量	牌号	标准号	单重	总重	备注
				材料		重量		
12	0422PTS28A-1-03-31500	Phase-shifting transformer	2					manufacturer get certificate
11	0422PTS28A-1-03-31400	Brake Resistance Cabinet	2					
10	0422PTS28A-1-03-31300	Variable Frequency Drive Cabinet	2					manufacturer get certificate
9	0422PTS28A-1-03-31200	Power Cabinet	2					
8	0422PTS28A-1-03-12300	Leg Junction Box	8					
7	0422PTS28A-1-03-12200	Leg Control Unit	3					
6	0422PTS28A-1-03-12100	NO.1 Leg Control Unit	1					
5	0422PTS28A-1-03-11200	Local Control Box	4					
4	0422PTS28A-1-03-11100	Central control station	1					
3	0422PTS28A-1-03-12	Network Diagram	1					
2	0422PTS28A-1-03-10	Distribution Single Line Dwg.	1					
1	0422PTS28A-1-03-07	Spare List	1					

设计	
校对	
审核	
工艺	
标准	
批准	

标记	数量	修改单号	签字	日期
设计				
校核				
审核				
标检				
审定				
批准				

1320T Electric Rack and Pinion Jacking System

Electric System

Assembly

所属装配图号	0422PTS28A-1-00
图号	0422PTS28A-1-03-00
标记	S
版本	
重量	
比例	1:15
共 1 页	第 1 页

WMMP 武汉船用机械有限责任公司

0422PTS28A-1-03-07

NOTE：

1、The list is for whole hull.

序号	代号	名称	数量	牌号	标准号	单重	总重	备注
				材料		重量		
23	FW2-0168	4# spare box	1					
22	LW39-16C-4A0-1x7J/4P-G(0,1,2,3,4,5,6,7)	multiple selector switch	1					
21	CB1-620B	buzzer	1					
20	GR-4C-AC230V-ZW	relay	2					
19	CR-2C-DC24V-ZW	relay	10					
18	CAD50M7C	relay	2					
17	MCB-01	normally closed contact	4					
16	MCB-10	normally open contact	4					
15	MCBH-00	relay base	4					
14	MLBL-01G	green LED lampholder	2					
13	MLBL-01L	blue LED lampholder	2					
12	MLBL-01Y	yellow LED lampholder	2					
11	CL2-502C	white lamp	1					
10	CL2-502R	red lamp	1					
9	M2SSK1-301	key select switch	1					
8	M2SS2-31L	select switch	1					
7	M2SS2-30B	select switch	1					
6	M3SS1-30B	select switch	1					
5	MP1-31Y	yellow button	2					
4	MP1-31L	blue button	2					
3	MP1-31G	green button	2					
2	MP1-30Y	button	2					
1	MP1-30R	button	2					

设计		1320T Electric Rack and Pinion Jacking System	所属装配图号	0422PTS28A-1-03-00
校对				
审核		Spare List	图号	0422PTS28A-1-03-07
工艺			标记 / 版本 / 重量 / 比例	S / / / 1:1
标准			共 1 页	第 1 页
批准				武汉船用机械有限责任公司

标记	数量	修改单号	签字	日期

设计		
校核		
审核		
标检		
审定		
批准		

0422PTS4A-03-08CJ

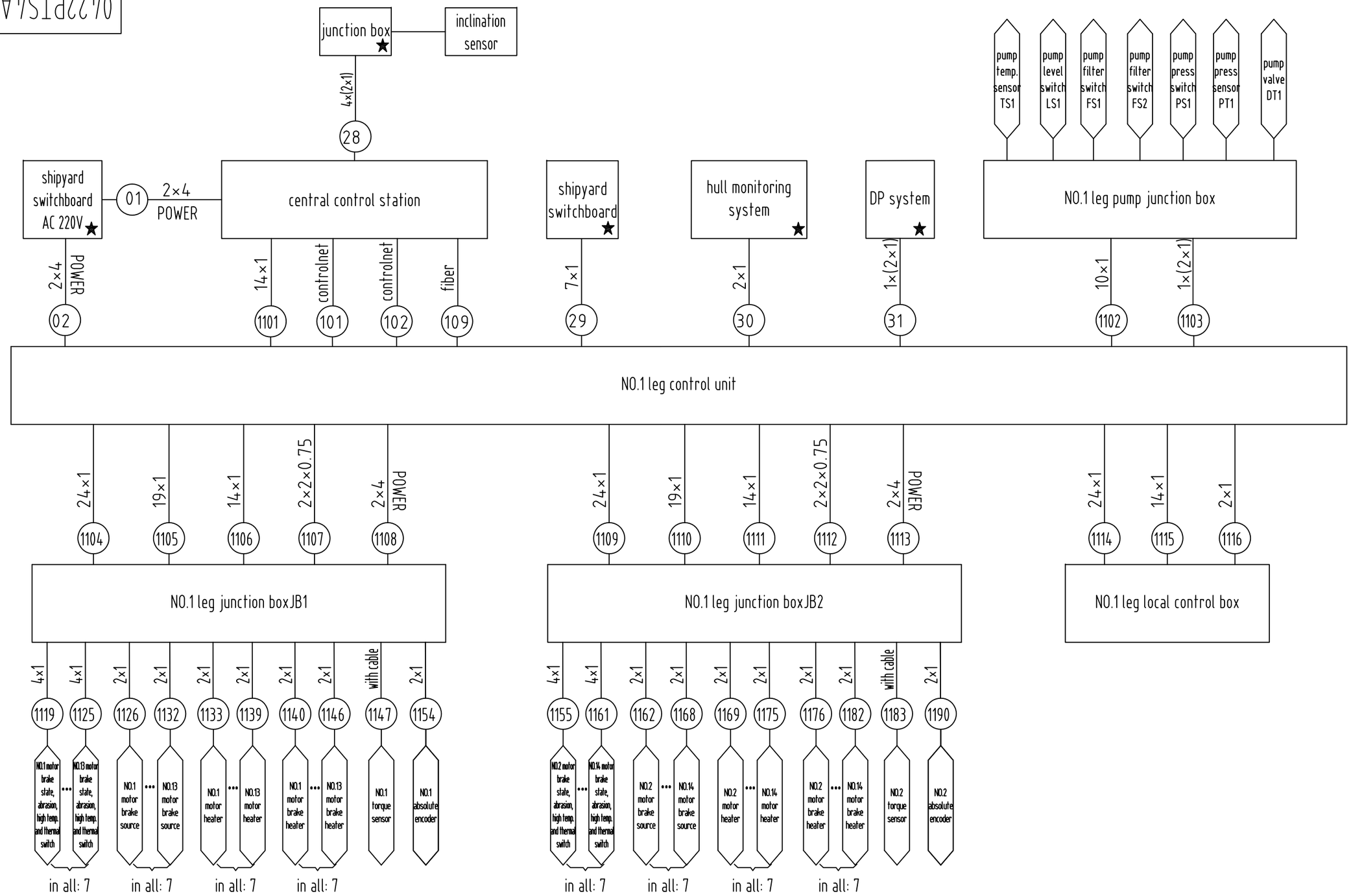

设计	
校对	
审核	
工艺	
标准	
批准	

★=NOT DELIVERY BY WMMP ← ★

NOTE:The cables with number are NOt delivered by WMMP.
The type and number of the cables are just for reference.

标记	数量	修改单号	签字	日期
设计				
校核				
审核				
标检				
审定				
批准				

WMPP300 offshore hull jacking system

Electric System Block Dwg.

所属装配图号	0422PTS4A-03-00CJ
图号	0422PTS4A-03-08CJ
标记	S
版本	
重量	
比例	1:1
共 8 页	第 1 页

武汉船用机械有限责任公司

0422PTS4A-03-08CJ

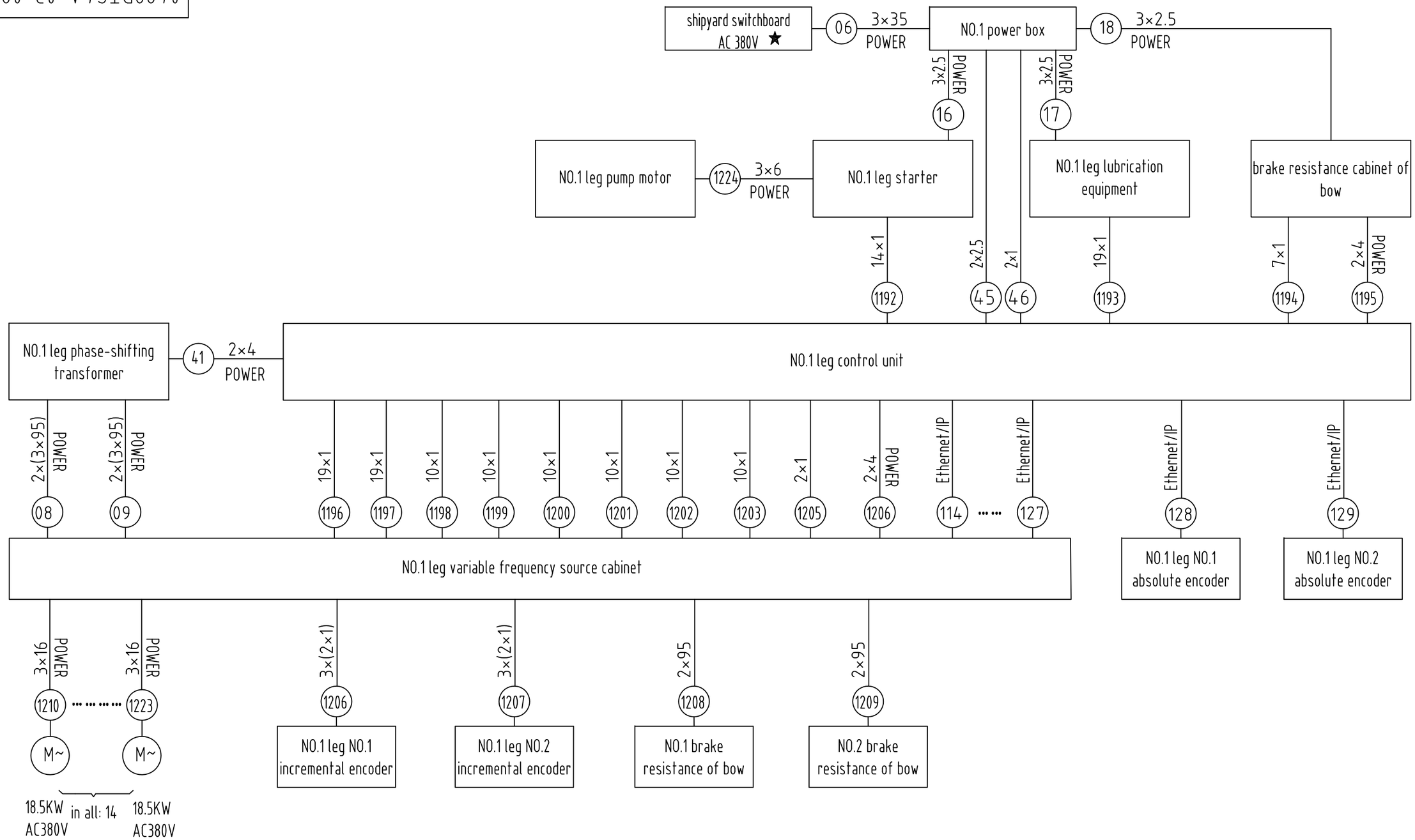

设计	
校对	
审核	
工艺	
标准	
批准	

★=NOT DELIVERY BY WMMP ← ★

NOTE:The cables with number are NOt delivered by WMMP.
The type and number of the cables are just for reference.

标记	数量	修改单号	签字	日期
设计				
校核				
审核				
标检				
审定				
批准				

WMPP300 offshore hull jacking system

Electric System Block Dwg.

所属装配图号	0422PTS4A-03-00CJ
图号	0422PTS4A-03-08CJ
标记	S
版本	
重量	
比例	1:1
共 8 页	第 2 页

武汉船用机械有限责任公司

0422PTS4A-03-08CJ

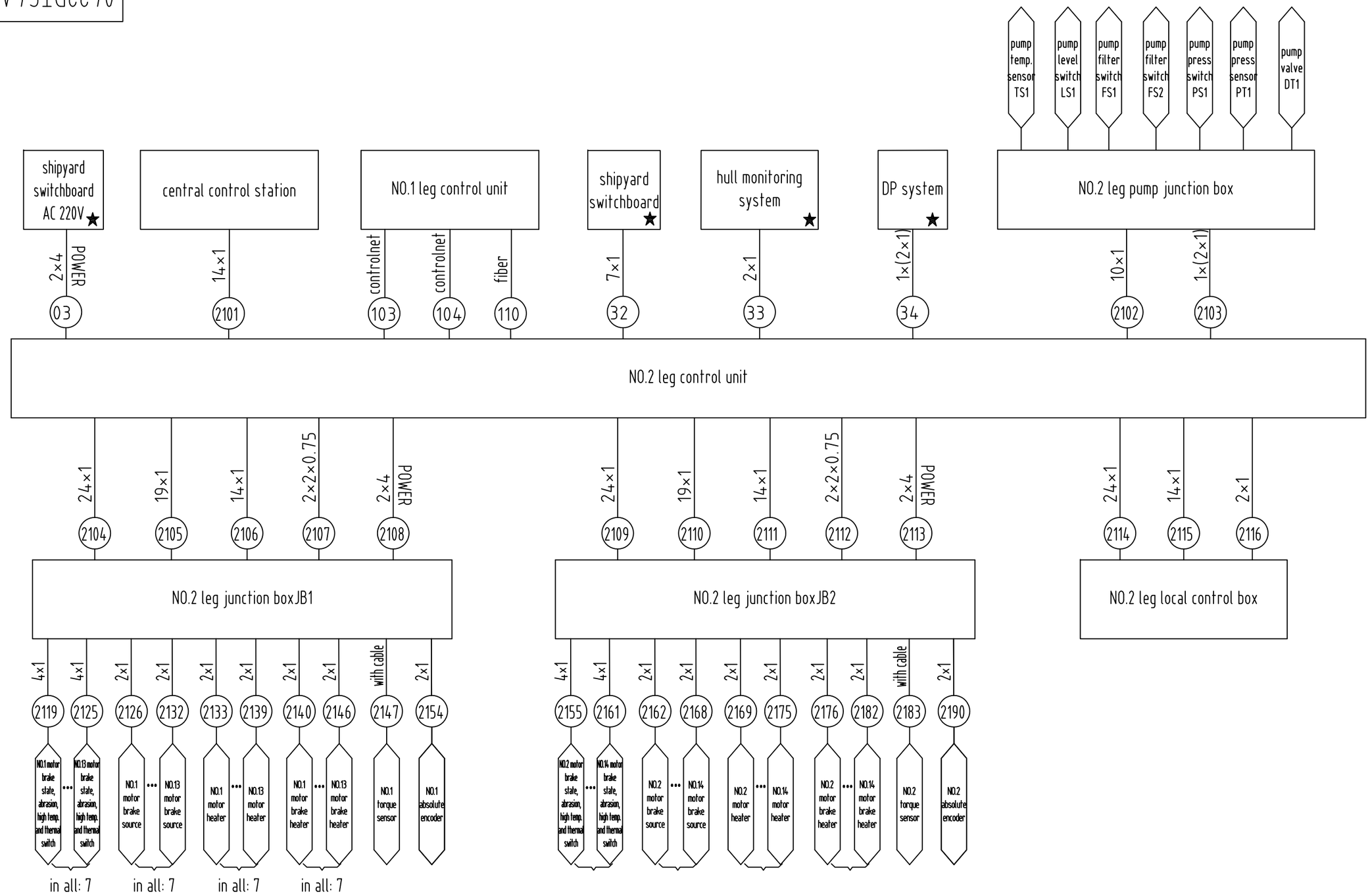

设计	
校对	
审核	
工艺	
标准	
批准	

★=NOT DELIVERY BY WMMP ← ★

NOTE:The cables with number are NOt delivered by WMMP.
The type and number of the cables are just for reference.

标记	数量	修改单号	签字	日期
设计				
校核				
审核				
标检				
审定				
批准				

WMPP300 offshore hull jacking system

Electric System Block Dwg.

所属装配图号	0422PTS4A-03-00CJ
图号	0422PTS4A-03-08CJ
标记	S
版本	
重量	
比例	1:1
共 8 页	第 3 页

武汉船用机械有限责任公司

0422PTS4A-03-08CJ

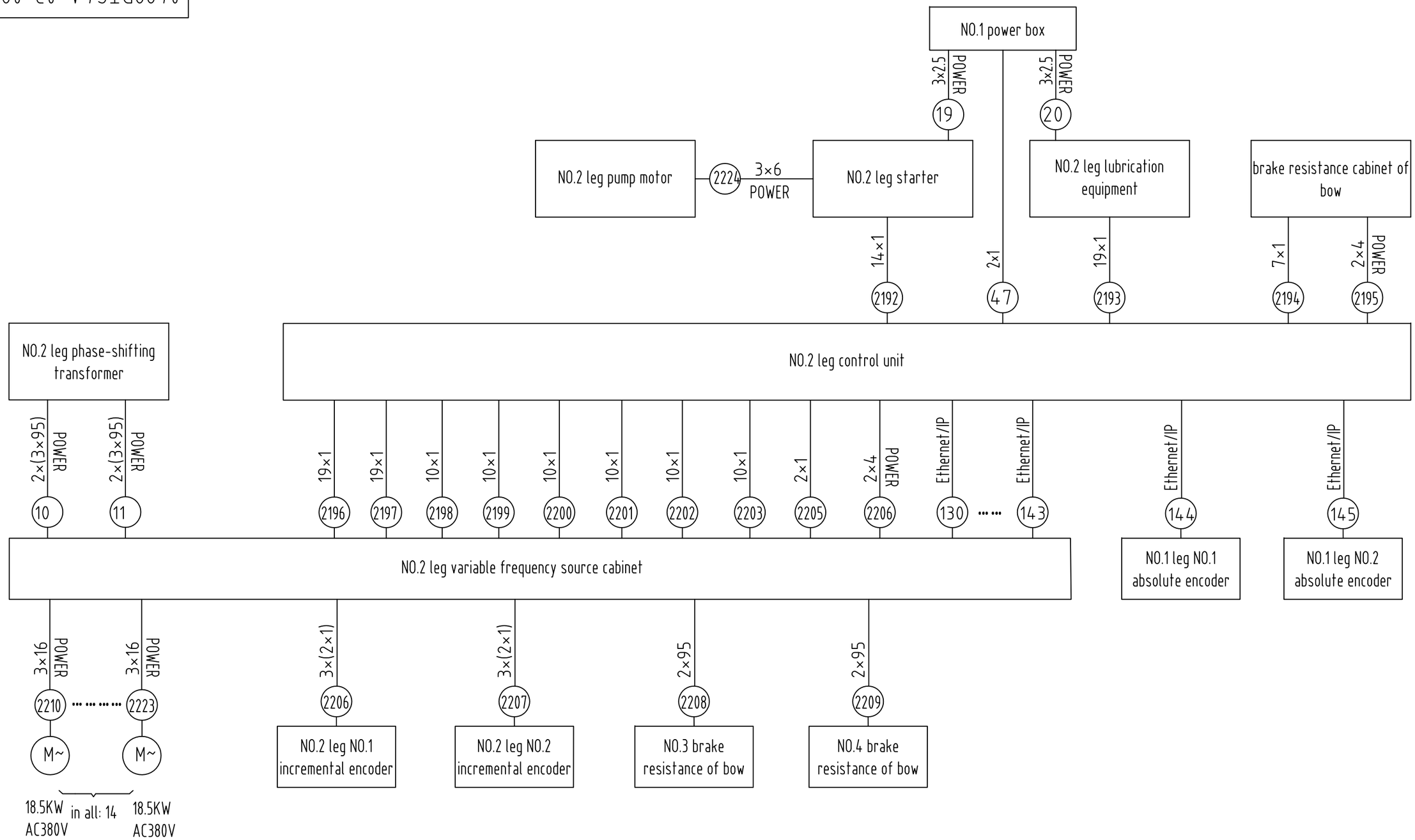

设计	
校对	
审核	
工艺	
标准	
批准	

★=NOT DELIVERY BY WMMP ← ★

NOTE:The cables with number are NOt delivered by WMMP.
The type and number of the cables are just for reference.

标记	数量	修改单号	签字	日期
设计				
校核				
审核				
标检				
审定				
批准				

WMPP300 offshore hull jacking system

Electric System Block Dwg.

所属装配图号	0422PTS4A-03-00CJ
图号	0422PTS4A-03-08CJ
标记	S
版本	
重量	
比例	1:1
共 8 页	第 4 页

武汉船用机械有限责任公司

0422PTS4A-03-08CJ

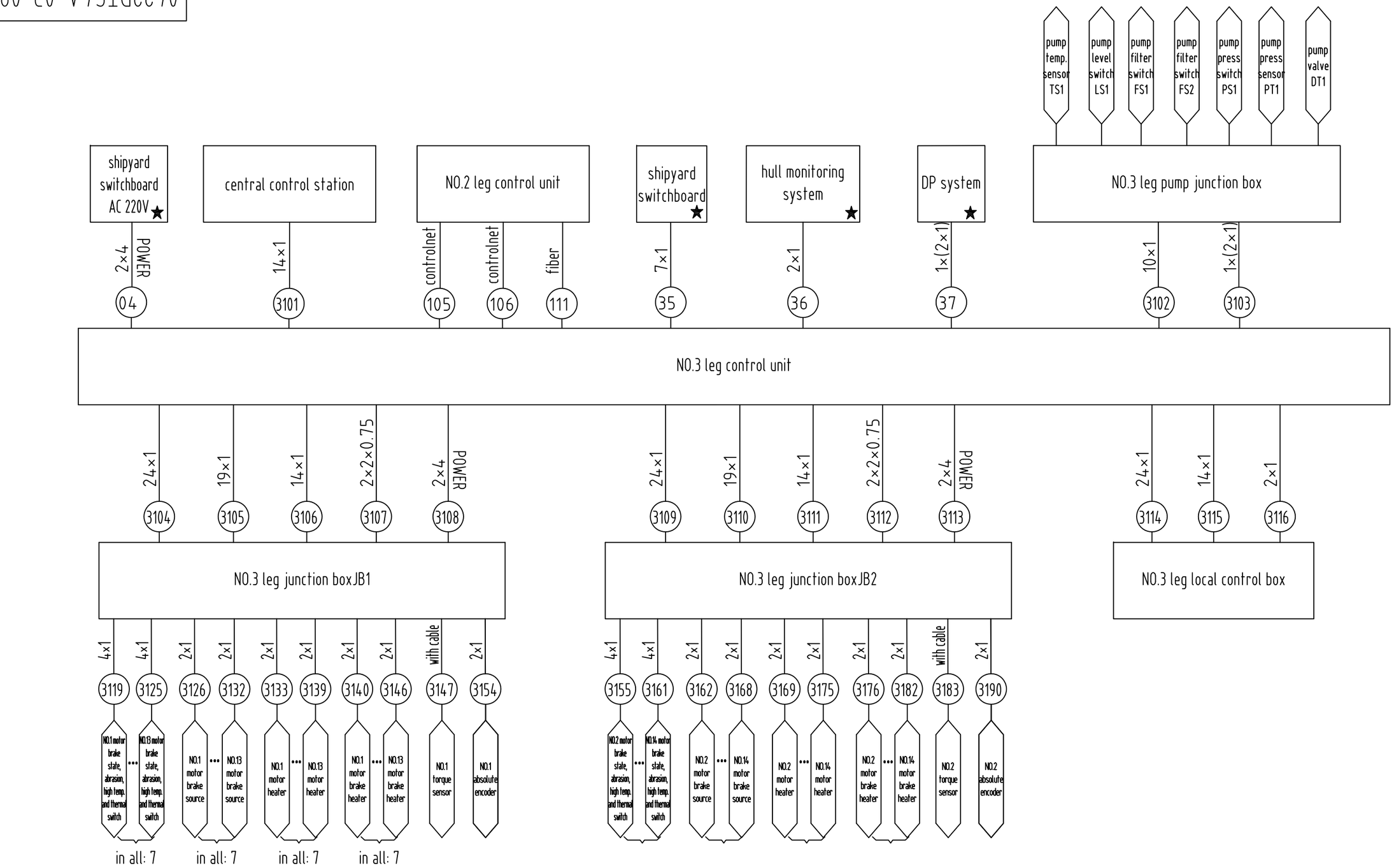

★=NOT DELIVERY BY WMMP ← ★

NOTE:The cables with number are NOt delivered by WMMP.
The type and number of the cables are just for reference.

设计	
校对	
审核	
工艺	
标准	
批准	

标记	数量	修改单号	签字	日期
设计				
校核				
审核				
标检				
审定				
批准				

WMPP300 offshore hull jacking system

Electric System Block Dwg.

所属装配图号	0422PTS4A-03-00CJ
图号	0422PTS4A-03-08CJ
标记	S
版本	
重量	
比例	1:1
共 8 页	第 5 页

武汉船用机械有限责任公司

0422PTS4A-03-08CJ

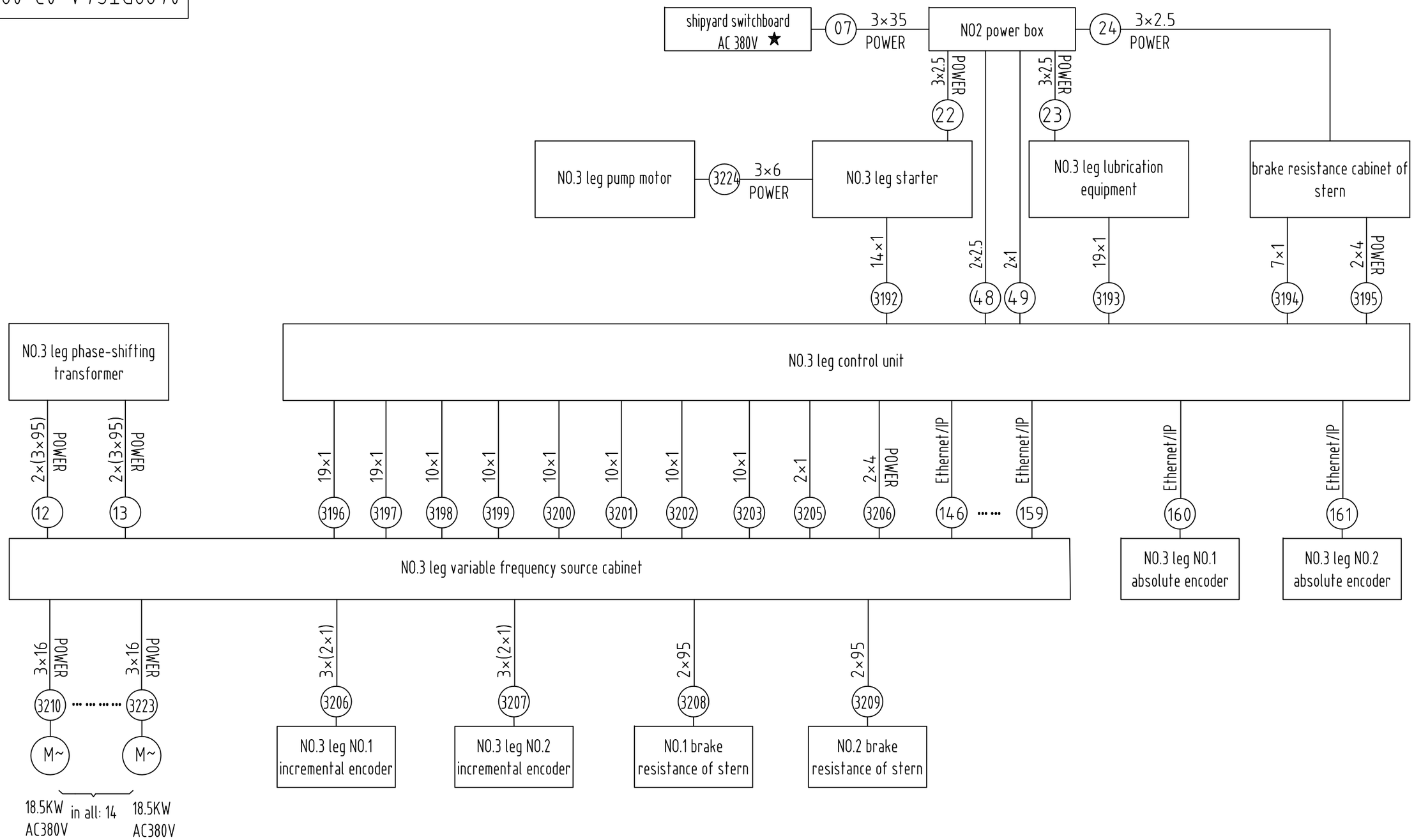

设计	
校对	
审核	
工艺	
标准	
批准	

★=NOT DELIVERY BY WMMP ← ★

NOTE:The cables with number are NOt delivered by WMMP.
The type and number of the cables are just for reference.

标记	数量	修改单号	签字	日期
设计				
校核				
审核				
标检				
审定				
批准				

WMPP300 offshore hull jacking system

Electric System Block Dwg.

所属装配图号	0422PTS4A-03-00CJ
图号	0422PTS4A-03-08CJ
标记	S
版本	
重量	
比例	1:1
共 8 页	第 6 页

武汉船用机械有限责任公司

0422PTS4A-03-08CJ

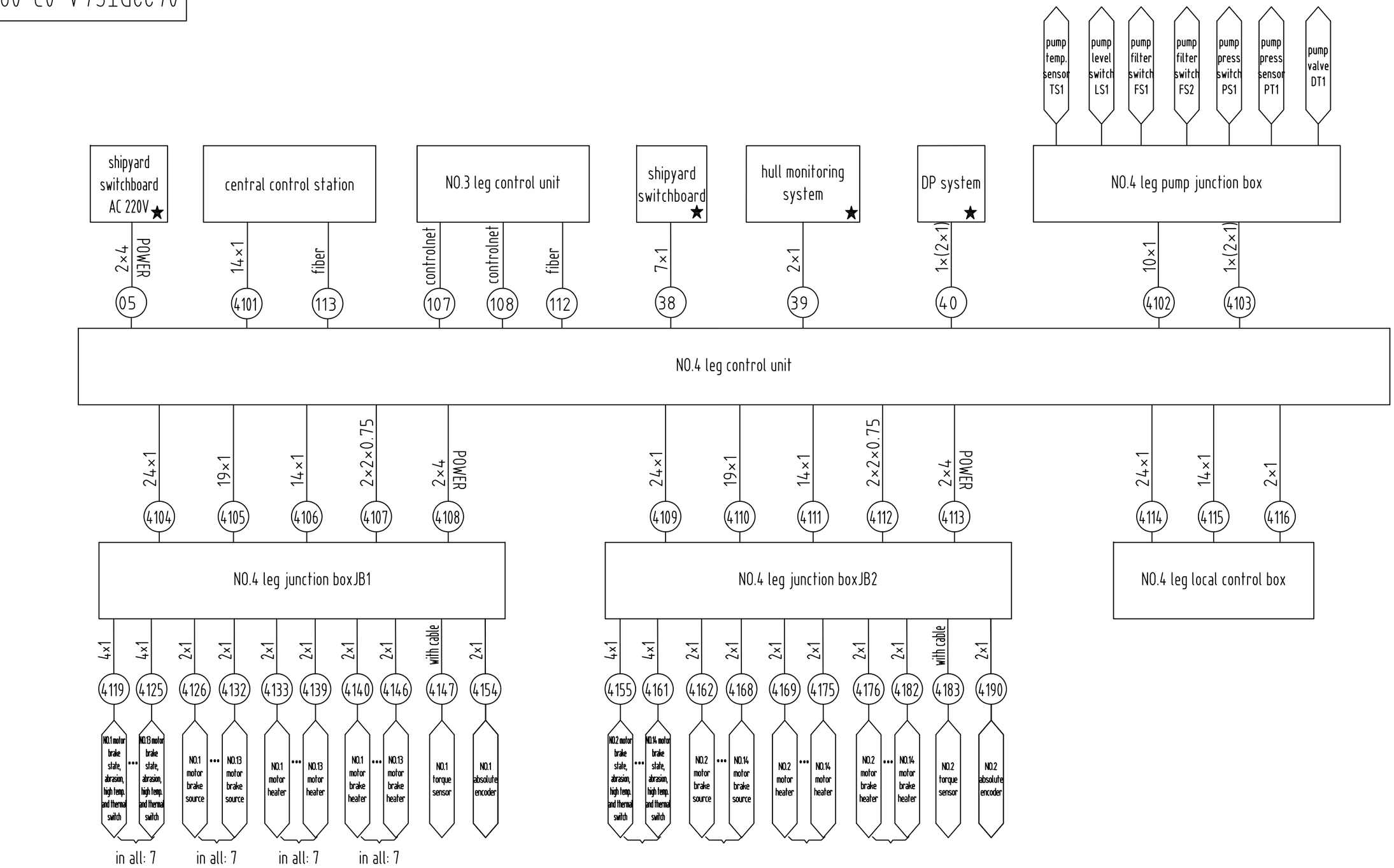

设计	
校对	
审核	
工艺	
标准	
批准	

★=NOT DELIVERY BY WMMP ← ★

NOTE:The cables with number are NOt delivered by WMMP.
The type and number of the cables are just for reference.

标记	数量	修改单号	签字	日期
设计				
校核				
审核				
标检				
审定				
批准				

WMPP300 offshore hull jacking system

Electric System Block Dwg.

所属装配图号	0422PTS4A-03-00CJ
图号	0422PTS4A-03-08CJ
标记	S
版本	
重量	
比例	1:1
共 8 页	第 7 页

武汉船用机械有限责任公司

0422PTS4A-03-08CJ

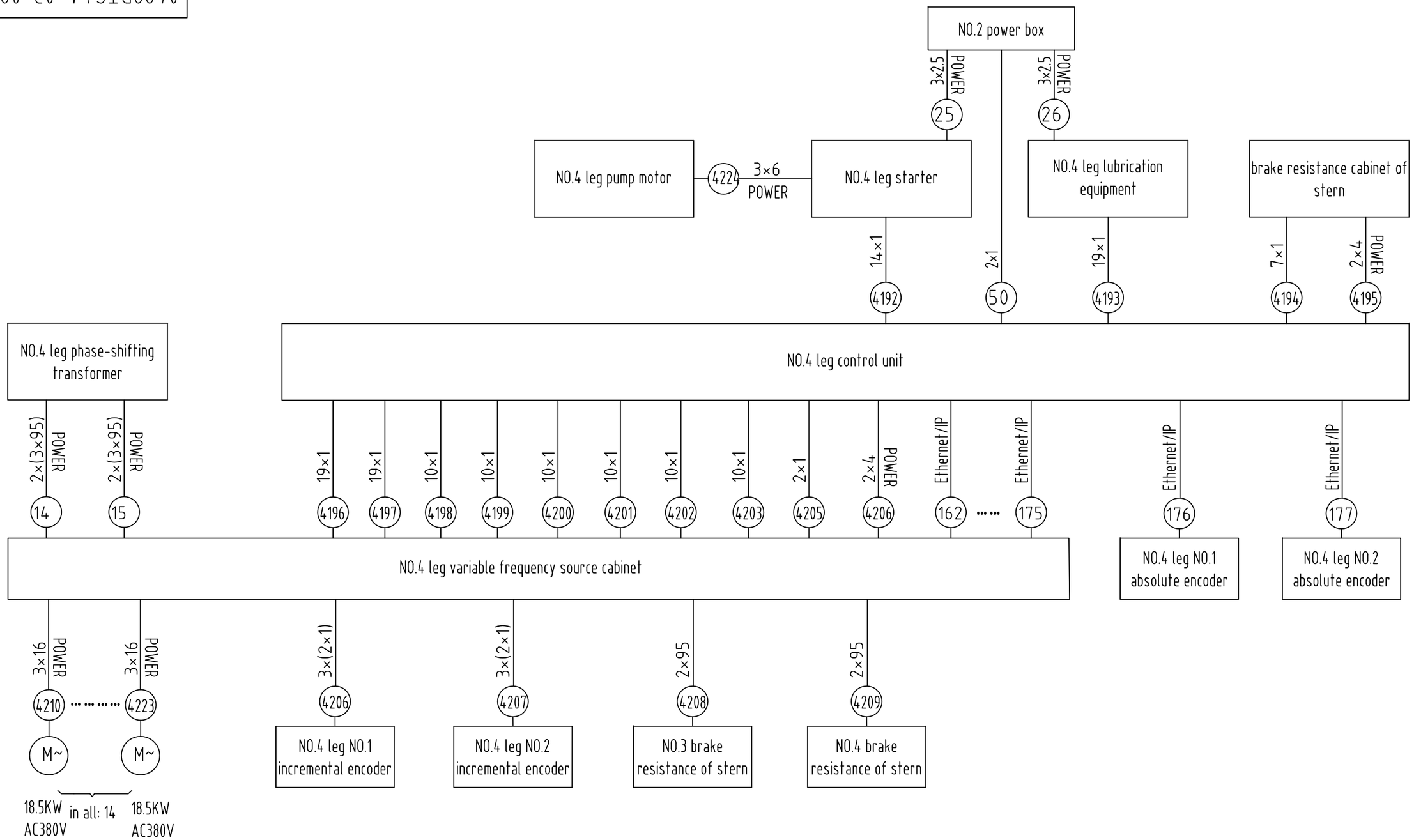

设计	
校对	
审核	
工艺	
标准	
批准	

★=NOT DELIVERY BY WMMP ← ★

NOTE:The cables with number are NOt delivered by WMMP.
The type and number of the cables are just for reference.

标记	数量	修改单号	签字	日期
设计				
校核				
审核				
标检				
审定				
批准				

WMPP300 offshore hull jacking system

Electric System Block Dwg.

所属装配图号	0422PTS4A-03-00CJ
图号	0422PTS4A-03-08CJ
标记	S
版本	
重量	
比例	1:1
共 8 页	第 8 页

武汉船用机械有限责任公司

电缆编号	页码
1/2/3/9/10/11	2
101/102	4
103/104	8
105/106	9
107/108/109	3
110/111	2
113/114	3
116-119	16
202,302,402	4
209,307,308,309,313,314,409	4
P1-P9 P11-P18	7
1101,2101,3101,4101	4
1102,2102,3102,4102	5
1103,2103,3103,4103	6
1104,2104,3104,4104	6
1110,1111,1114	8

电缆编号	页码
1120,1121	9
1140-1145,1152,1157	10
1164-1169,1176-1181,1188-1193	11
1195,1212	10
1230-1235,1242-1247	12
1254-1259,1266-1271,1278-1283	13
1297	12
1360	16
1361-1364	14
1365,1366,1375,1376	15
1370-1374	16
1401-1406	17
1407-1412	18

注意：

1.本电缆连接图仅包含1#桩腿，其他三条桩腿未列出电缆的连接方式与1#桩腿相同；

设计	
校对	
审核	
工艺	
标准	
批准	

标记	数量	修改单号	签字	日期
设计				
校核				
审核				
标检				
审定				
批准				

1320T Electric Rack and Pinion Jacking System

Electric System Cable Connection Dwg.

所属装配图号	0422PTS28A-1-03-00WG
图号	0422PTS28A-1-03-09WG
标记	S
版本	
重量	
比例	1:1
共 18 页	第 1 页

武汉船用机械有限责任公司

0422PTS28A-01-03-09WG

cable number	type specification	line num./ colour	origin device name	origin device terminal	origin device shorting	shield ground	signal name	destination device shorting	destination device terminal	destination device name	shield ground
01	4*(3*95)	1	MSB			√	AC690V/50Hz/3PH main power		A	NO.1 phase-shift. transf.	√
		2					AC690V/50Hz/3PH main power		B		
		3					AC690V/50Hz/3PH main power		C		
09	4*(3*95)	1				√	AC690V/50Hz/3PH main power		A	NO.2phase-shift. transf.	√
		2					AC690V/50Hz/3PH main power		B		
		3					AC690V/50Hz/3PH main power		C		
02	4*(3*95)	1	1#phase-shift. transf.	a1		√	AC400V/50Hz/3PH main power		1L1	NO.1 leg VFD ICU	√
		2		b1			AC400V/50Hz/3PH main power		1L2		
		3		c1			AC400V/50Hz/3PH main power		1L3		
03	4*(3*95)	1	1#phase-shift. transf.	a2		√	AC400V/50Hz/3PH main power		2L1	NO.1 leg VFD ICU	√
		2		b2			AC400V/50Hz/3PH main power		2L2		
		3		c2			AC400V/50Hz/3PH main power		2L3		
10	4*(3*95)	1	2#phase-shift. transf.	a1		√	AC400V/50Hz/3PH main power		1L1	NO.2 leg VFD ICU	√
		2		b1			AC400V/50Hz/3PH main power		1L2		
		3		c1			AC400V/50Hz/3PH main power		1L3		
11	4*(3*95)	1	2#phase-shift. transf.	a2		√	AC400V/50Hz/3PH main power		2L1	NO.2 leg VFD ICU	√
		2		b2			AC400V/50Hz/3PH main power		2L2		
		3		c2			AC400V/50Hz/3PH main power		2L3		
110	3*4	1	MSB			√	AC690V/50Hz/3PH MSB NO.1 leg breaker2		primary :A	1# Pre-magnetized transf.	√
		2					AC690V/50Hz/3PH MSB NO.1 leg breaker4		primary :B		
		3					AC690V/50Hz/3PH MSB NO.1 leg breaker6		primary :C		
310	3*4	1				√	AC690V/50Hz/3PH MSB NO.2 leg breaker2		primary :A	2# Pre-magnetized transf.	√
		2					AC690V/50Hz/3PH MSB NO.2 leg breaker4		primary :B		
		3					AC690V/50Hz/3PH MSB NO.2 leg breaker6		primary :C		
111	3*4	1				√	AC690V/50Hz/3PH MSB NO.1 leg contactor2		second :a	1# Pre-magnetized transf.	√
		2					AC690V/50Hz/3PH MSB NO.1 leg contactor4		second :b		
		3					AC690V/50Hz/3PH MSB NO.1 leg contactor6		second :c		
311	3*4	1				√	AC690V/50Hz/3PH MSB NO.2 leg contactor2		second :a	2# Pre-magnetized transf.	√
		2					AC690V/50Hz/3PH MSB NO.2 leg contactor4		second :b		
		3					AC690V/50Hz/3PH MSB NO.2 leg contactor6		second :c		

cable number	type specification	line num./ colour	origin device name	origin device terminal	origin device shorting	shield ground	signal name	destination device shorting	destination device terminal	destination device name	shield ground
04	6*(3*95)	1-1/4-1	NO.1 leg VFD DBU	R1.1			brake unit U2		R1	brake resistance of bow	√ the third core of each cable is grounded with the shield.
		1-2/4-2		R1.2			DC-		P1		
		2-1/5-1		R2.1			brake unit V2		R2		
		2-2/5-2		R2.2			DC-		P2		
		3-1/6-1		R3.1			brake unit W2		R3		
		3-2/6-2		R3.2			DC-		P3		
		1-3/2-3/3-3/4-3/5-3/6-3		PE					PE		
12	6*(3*95)	1-1/4-1	NO.2 leg VFD DBU	R1.1			brake unit U2		R1	brake resistance of stern	√ the third core of each cable is grounded with the shield.
		1-2/4-2		R1.2			DC-		P1		
		2-1/5-1		R2.1			brake unit V2		R2		
		2-2/5-2		R2.2			DC-		P2		
		3-1/6-1		R3.1			brake unit W2		R3		
		3-2/6-2		R3.2			DC-		P3		
		1-3/2-3/3-3/4-3/5-3/6-3		PE					PE		

★=不由WMMP提供

设计	
校对	
审核	
工艺	
标准	
批准	

标记	数量	修改单号	签字	日期
设计				
校核				
审核				
标检				
审定				
批准				

1320T Electric Rack and Pinion Jacking System

Electric System Cable Connection Dwg.

所属装配图号	0422PTS28A-01-03-00WG
图号	0422PTS28A-01-03-09WG
标记	S
版本	
重量	
比例	1:1
共 18 页	第 2 页

武汉船用机械有限责任公司

cable number	type specification	line num./ colour	origin device name	origin device terminal	origin device shorting	shield ground	signal name	destination device shorting	destination device terminal	destination device name	shield ground
108	3*2.5	1	NO.1 power box (bow)	X1:4		√	brake resist. fan power of bow 380V/50HZ/3PH		U	NO.1 brake resist. of bow	√
		2		X1:5			brake resist. fan power of bow 380V/50HZ/3PH		V		
		3		X1:6			brake resist. fan power of bow 380V/50HZ/3PH		W		
308	3*2.5	1	2#power box (stern)	X1:4		√	brake resist. fan power of stern 380V/50HZ/3PH		U	NO.2 brake resist. of stern	√
		2		X1:5			brake resist. fan power of stern 380V/50HZ/3PH		V		
		3		X1:6			brake resist. fan power of stern 380V/50HZ/3PH		W		
109	3*2.5	1	NO.1 power box (bow)	X1:7		√	lubrication power of bow 380V/50HZ/3PH		X1:1/L1	NO.1 leg lubrication cabinet	√
		2		X1:8			lubrication power of bow 380V/50HZ/3PH		X1:2/L2		
		3		X1:9			lubrication power of bow 380V/50HZ/3PH		X1:3/L3		
209	3*2.5	1	1#power box (bow)	X2:7		√	lubrication power of bow 380V/50HZ/3PH		X1:1/L1	NO.2 leg lubrication cabinet	√
		2		X2:8			lubrication power of bow 380V/50HZ/3PH		X1:2/L2		
		3		X2:9			lubrication power of bow 380V/50HZ/3PH		X1:3/L3		
309	3*2.5	1	2#power box (stern)	X1:7		√	lubrication power of bow 380V/50HZ/3PH		X1:1/L1	NO.3 leg lubrication cabinet	√
		2		X1:8			lubrication power of bow 380V/50HZ/3PH		X1:2/L2		
		3		X1:9			lubrication power of bow 380V/50HZ/3PH		X1:3/L3		
409	3*2.5	1	2#power box (stern)	X2:7		√	lubrication power of bow 380V/50HZ/3PH		X1:1/L1	NO.4 leg lubrication cabinet	√
		2		X2:8			lubrication power of bow 380V/50HZ/3PH		X1:2/L2		
		3		X2:9			lubrication power of bow 380V/50HZ/3PH		X1:3/L3		
107	3*16	1	MSB 400V			√	power cabinet power 400V/50HZ/3PH		X0:R	NO.1 power cabinet	√
		2					power cabinet power 400V/50HZ/3PH		X0:S		
		3					power cabinet power 400V/50HZ/3PH		X0:T		
307	3*16	1	MSB 400V ★			√	power cabinet power 400V/50HZ/3PH		X0:R	NO.2 power cabinet	√
		2					power cabinet power 400V/50HZ/3PH		X0:S		
		3					power cabinet power 400V/50HZ/3PH		X0:T		
113	2*1.5	1	NO.1 leg control unit	X0:17		√	phase-shift. transf. fan power 220V/50HZ		X1:1	NO.1 leg phase-shift. transf.	√
		2		X0:18			phase-shift. transf. fan power 220V/50HZ		X1:2		
313	2*2.5	1	NO.3 leg control unit	X0:17		√	phase-shift. transf. fan power 220V/50HZ		X1:1	NO.2 leg phase-shift. transf.	√
		2		X0:18			phase-shift. transf. fan power 220V/50HZ		X1:2		
114	2*1.5	1	NO.1 leg control unit	X0:13		√	phase-shift. transf. heater power 220V/50HZ		X1：H1	NO.1 leg phase-shift. transf.	√
		2		X0:14			phase-shift. transf. heater power 220V/50HZ		X1：H2		
314	2*1.5	1	NO.3 leg control unit	X0:13		√	phase-shift. transf. heater power 220V/50HZ		X1：H1	NO.2 leg phase-shift. transf.	√
		2		X0:14			phase-shift. transf. heater power 220V/50HZ		X1：H2		

★=不由WMMP提供

设计	
校对	
审核	
工艺	
标准	
批准	

标记	数量	修改单号	签字	日期
设计				
校核				
审核				
标检				
审定				
批准				

1320T Electric Rack and Pinion Jacking System

Electric System Cable Connection Dwg.

所属装配图号	0422PTS28A-01-03-00WG
图号	0422PTS28A-01-03-09WG
标记	S
版本	
重量	
比例	1:1
共 18 页	第 3 页

WMMP 武汉船用机械有限责任公司

0422PTS28A-01-03-09WG

cable number	type specification	line num./ colour	origin device name	origin device terminal	origin device shorting	shield ground	signal name	destination device shorting	destination device terminal	destination device name	shield ground
101	2*2.5	1	MSB220V			√	CCS power 220V/50HZ/1PH		X0:1	CCS	√
		2					CCS power 220V/50HZ/1PH		X0:2		
102	2*4	1				√	NO.1 leg control unit power 220V/50HZ/1PH		X0:1	NO.1 leg control unit	√
		2					NO.1 leg control unit power 220V/50HZ/1PH		X0:2		
202	2*4	1				√	NO.2 leg control unit power 220V/50HZ/1PH		X0:1	NO.2 leg control unit	√
		2					NO.2 leg control unit power 220V/50HZ/1PH		X0:2		
302	2*4	1				√	NO.3 leg control unit power 220V/50HZ/1PH		X0:1	NO.3 leg control unit	√
		2					NO.3 leg control unit power 220V/50HZ/1PH		X0:2		
402	2*4	1				√	NO.4 leg control unit power 220V/50HZ/1PH		X0:1	NO.4 leg control unit	√
		2					NO.4 leg control unit power 220V/50HZ/1PH		X0:2		
1101	10*1.5	1	★ MSB			√	heavy request(MSB)+		X15:1	NO.1 leg control unit	√
		2					heavy request(MSB)-		X15:2		
		3					jacking running signal(MSB)+		X15:3		
		4					jacking running signal(MSB)-		X15:4		
		5					start enable(MSB)+		X15:5		
		6					start enable(MSB)-		X15:6		
		7					MSB main breaker state(MSB)+		X15:7		
		8					MSB main breaker state(MSB)-		X15:8		
		9									
		10									
2101	10*1.5	1	★ MSB			√	重载问询(MSB)+		X15:1	NO.2 leg control unit	√
		2					重载问询(MSB)-		X15:2		
		3					升降运行信号(MSB)+		X15:3		
		4					升降运行信号(MSB)-		X15:4		
		5					允许启动信号(MSB)+		X15:5		
		6					允许启动信号(MSB)-		X15:6		
		7					MSB 主开关状态(MSB)+		X15:7		
		8					MSB 主开关状态(MSB)-		X15:8		
		9									
		10									
3101	10*1.5	1	★ MSB			√	heavy request(MSB)+		X15:1	NO.3 leg control unit	√
		2					heavy request(MSB)-		X15:2		
		3					jacking running signal(MSB)+		X15:3		
		4					jacking running signal(MSB)-		X15:4		
		5					start enable(MSB)+		X15:5		
		6					start enable(MSB)-		X15:6		
		7					MSB main breaker state(MSB)+		X15:7		
		8					MSB main breaker state(MSB)-		X15:8		
		9									
		10									
4101	10*1.5	1	★ MSB			√	heavy request(MSB)+		X15:1	NO.4 leg control unit	√
		2					heavy request(MSB)-		X15:2		
		3					jacking running signal(MSB)+		X15:3		
		4					jacking running signal(MSB)-		X15:4		
		5					start enable(MSB)+		X15:5		
		6					start enable(MSB)-		X15:6		
		7					MSB main breaker state(MSB)+		X15:7		
		8					MSB main breaker state(MSB)-		X15:8		
		9									
		10									

★=不由WMMP提供

设计	
校对	
审核	
工艺	
标准	
批准	

标记	数量	修改单号	签字	日期
设计				
校核				
审核				
标检				
审定				
批准				

1320T Electric Rack and Pinion Jacking System

Electric System Cable Connection Dwg.

所属装配图号	0422PTS28A-01-03-00WG
图号	0422PTS28A-01-03-09WG
标记	S
版本	
重量	
比例	1:1
共 18 页	第 4 页

WMMP 武汉船用机械有限责任公司

0422PTS28A-01-03-09WG

cable number	type specification	line num./ colour	origin device name	origin device terminal	origin device shorting	shield ground	signal name	destination device shorting	destination device terminal	destination device name	shield ground
1103	2*1.5	1	NO.1 leg control unit	X15:11		√	jacking synthesize alarm +			hull monitoring system	√
		2		X15:12			jacking synthesize alarm -				
2103	2*1.5	1	NO.2 leg control unit	X15:11		√	jacking synthesize alarm +				√
		2		X15:12			jacking synthesize alarm -				
3103	2*1.5	1	NO.3 leg control unit	X15:11		√	jacking synthesize alarm +				√
		2		X15:12			jacking synthesize alarm -				
4103	2*1.5	1	NO.4 leg control unit	X15:11		√	jacking synthesize alarm +				√
		2		X15:12			jacking synthesize alarm -				
1104	4*2*0.75	1-1	NO.1 leg control unit	X15:15		√	leg distance signal(DP)+			★ DP system	√
		1-2		X15:16			leg distance signal(DP)-				
		2-1		X15:17			leg touch ground signal(DP)+				
		2-2		X15:18			leg touch ground signal(DP)-				
2104	4*2*0.75	1-1	NO.2 leg control unit	X15:15		√	leg distance signal(DP)+				√
		1-2		X15:16			leg distance signal(DP)-				
		2-1		X15:17			leg touch ground signal(DP)+				
		2-2		X15:18			leg touch ground signal(DP)-				
3104	4*2*0.75	1-1	NO.3 leg control unit	X15:15		√	leg distance signal(DP)+				√
		1-2		X15:16			leg distance signal(DP)-				
		2-1		X15:17			leg touch ground signal(DP)+				
		2-2		X15:18			leg touch ground signal(DP)-				
4104	4*2*0.75	1-1	NO.4 leg control unit	X15:15		√	leg distance signal(DP)+				√
		1-2		X15:16			leg distance signal(DP)-				
		2-1		X15:17			leg touch ground signal(DP)+				
		2-2		X15:18			leg touch ground signal(DP)-				

设计	
校对	
审核	
工艺	
标准	
批准	

标记	数量	修改单号	签字	日期
设计				
校核				
审核				
标检				
审定				
批准				

1320T Electric Rack and Pinion Jacking System

Electric System Cable Connection Dwg.

所属装配图号	0422PTS28A-01-03-00WG
图号	0422PTS28A-01-03-09WG
标记	S
版本	
重量	
比例	1:1
共 18 页	第 6 页

WMMIP 武汉船用机械有限责任公司

cable number	type specification	line num./ colour	origin device name	origin device terminal	origin device shorting	shield ground	signal name	destination device shorting	destination device terminal	destination device name	shield ground
1103	2*1.5	1	NO.1 leg control unit	X15:11		√	jacking synthesize alarm +			hull monitoring system	√
		2		X15:12			jacking synthesize alarm -				
2103	2*1.5	1	NO.2 leg control unit	X15:11		√	jacking synthesize alarm +				√
		2		X15:12			jacking synthesize alarm -				
3103	2*1.5	1	NO.3 leg control unit	X15:11		√	jacking synthesize alarm +				√
		2		X15:12			jacking synthesize alarm -				
4103	2*1.5	1	NO.4 leg control unit	X15:11		√	jacking synthesize alarm +				√
		2		X15:12			jacking synthesize alarm -				
1104	4*2*0.75	1-1	NO.1 leg control unit	X15:15		√	leg distance signal(DP)+			★ DP system	√
		1-2		X15:16			leg distance signal(DP)-				
		2-1		X15:17			leg touch ground signal(DP)+				
		2-2		X15:18			leg touch ground signal(DP)-				
2104	4*2*0.75	1-1	NO.2 leg control unit	X15:15		√	leg distance signal(DP)+				√
		1-2		X15:16			leg distance signal(DP)-				
		2-1		X15:17			leg touch ground signal(DP)+				
		2-2		X15:18			leg touch ground signal(DP)-				
3104	4*2*0.75	1-1	NO.3 leg control unit	X15:15		√	leg distance signal(DP)+				√
		1-2		X15:16			leg distance signal(DP)-				
		2-1		X15:17			leg touch ground signal(DP)+				
		2-2		X15:18			leg touch ground signal(DP)-				
4104	4*2*0.75	1-1	NO.4 leg control unit	X15:15		√	leg distance signal(DP)+				√
		1-2		X15:16			leg distance signal(DP)-				
		2-1		X15:17			leg touch ground signal(DP)+				
		2-2		X15:18			leg touch ground signal(DP)-				

设计	
校对	
审核	
工艺	
标准	
批准	

标记	数量	修改单号	签字	日期
设计				
校核				
审核				
标检				
审定				
批准				

1320T Electric Rack and Pinion Jacking System

Electric System Cable Connection Dwg.

所属装配图号	0422PTS28A-01-03-00WG
图号	0422PTS28A-01-03-09WG
标记	S
版本	
重量	
比例	1:1
共 18 页	第 6 页

武汉船用机械有限责任公司

0422PTS28A-01-03-09WG

cable number	type specification	line num./ colour	origin device name	terminal	shorting	shield ground	signal name	destination device shorting	terminal	name	shield ground
P1	Ethernet		CCS			√	communication signal			NO.1 leg control unit	√
P11	Ethernet		NO.1 leg control unit			√	communication signal			NO.3 leg control unit	√
P15	Ethernet		NO.3 leg control unit			√	communication signal			NO.4 leg control unit	√
P6	Ethernet		NO.4 leg control unit			√	communication signal			NO.2 leg control unit	√
P5	Ethernet		NO.2 leg control unit			√	communication signal			CCS	√
P10	Ethernet		CCS			√	communication signal			NO.1 leg control unit	√
P2	Ethernet		NO.1 leg control unit			√	absolute encoder signal			NO.1 leg NO.1 absolute encoder	√
	Ethernet										
P3			NO.1 leg control unit			√	absolute encoder signal			NO.1 leg NO.2 absolute encoder	√
	Ethernet										
P4	Ethernet		NO.1 leg control unit			√	VFD communication signal			NO.1 leg VFD	√
	Ethernet										
P7			NO.2 leg control unit			√	absolute encoder signal			NO.2 leg NO.1 absolute encoder	√
	Ethernet										
P8	Ethernet		NO.2 leg control unit			√	absolute encoder signal			NO.2 leg NO.2 absolute encoder	√
	Ethernet										
P9			NO.2 leg control unit			√	VFD communication signal			NO.2 leg VFD	√
	Ethernet										
P12	Ethernet		NO.3 leg control unit			√	absolute encoder signal			NO.3 leg NO.1 absolute encoder	√
	Ethernet										
P13			NO.3 leg control unit			√	absolute encoder signal			NO.3 leg NO.2 absolute encoder	√
	Ethernet										
P14	Ethernet		NO.3 leg control unit			√	VFD communication signal			NO.3 leg VFD	√
	Ethernet										
P16			NO.4 leg control unit			√	absolute encoder signal			NO.4 leg NO.1 absolute encoder	√
	Ethernet										
P17	Ethernet		NO.4 leg control unit			√	absolute encoder signal			NO.4 leg NO.2 absolute encoder	√
	Ethernet										
P18			NO.4 leg control unit			√	VFD communication signal			NO.4 leg VFD	√
	Ethernet										

★=不由WMMP提供

设计	
校对	
审核	
工艺	
标准	
批准	

标记	数量	修改单号	签字	日期
设计				
校核				
审核				
标检				
审定				
批准				

1320T Electric Rack and Pinion Jacking System

Electric System Cable Connection Dwg.

所属装配图号	0422PTS28A-01-03-00WG
图号	0422PTS28A-01-03-09WG
标记	S
版本	
重量	
比例	1:1
共 18 页	第 7 页

WMMP 武汉船用机械有限责任公司

0422PTS28A-01-03-09WG

cable number	type specification	line num./ colour	origin device name	origin device terminal	origin device shorting	shield ground	signal name	destination device shorting	destination device terminal	destination device name	shield ground
1110	27*1.5	1	NO.1 leg control unit	X2:1		√	common of input signal		X2:1	NO.1 leg NO.1 junction box	√
		2		X2:2			NO.1 brake open signal		X2:2		
		3		X2:3			NO.1 brake wear signal		X2:3		
		4		X2:4			NO.1 brake high temp. signal		X2:4		
		5		X2:5			NO.3 brake open signal		X2:6		
		6		X2:6			NO.3 brake wear signal		X2:7		
		7		X2:7			NO.3 brake high temp. signal		X2:8		
		8		X2:8			NO.5 brake open signal		X2:10		
		9		X2:9			NO.5 brake wear signal		X2:11		
		10		X2:10			NO.5 brake high temp. signal		X2:12		
		11		X2:11			NO.7 brake open signal		X2:14		
		12		X2:12			NO.7 brake wear signal		X2:15		
		13		X2:13			NO.7 brake high temp. signal		X2:16		
		14		X2:14			NO.9 brake open signal		X2:18		
		15		X2:15			NO.9 brake wear signal		X2:19		
		16		X2:16			NO.9 brake high temp. signal		X2:20		
		17		X2:17			NO.11 brake open signal		X2:22		
		18		X2:18			NO.11 brake wear signal		X2:23		
		19		X2:19			NO.11 brake high temp. signal		X2:24		
		20		X2:20					X2:26		
		21		X2:21					X2:27		
		22		X2:22					X2:28		
104	2*4	1	NO.1 leg control unit	X0：3		√	heater power +		X3:1	NO.1 leg NO.1 junction box	√
		2		X0：4			heater power -		X3:2		

cable number	type specification	line num./ colour	origin device name	origin device terminal	origin device shorting	shield ground	signal name	destination device shorting	destination device terminal	destination device name	shield ground
1111	30*1.5	1	NO.1 leg control unit	X4:1		√	NO.1 brake open power+		X1:1	NO.1 leg NO.1 junction box	√
		2		X4:2			NO.1 brake open power-		X1:2		
		3		X4:3			NO.1 brake fast stop+		X1:3		
		4		X4:4			NO.1 brake fast stop-		X1:4		
		5		X4:5			NO.3 brake open power+		X1:5		
		6		X4:6			NO.3 brake open power-		X1:6		
		7		X4:7			NO.3 brake fast stop+		X1:7		
		8		X4:8			NO.3 brake fast stop-		X1:8		
		9		X4:9			NO.5 brake open power+		X1:9		
		10		X4:10			NO.5 brake open power-		X1:10		
		11		X4:11			NO.5 brake fast stop+		X1:11		
		12		X4:12			NO.5 brake fast stop-		X1:12		
		13		X4:13			NO.7 brake open power+		X1:13		
		14		X4:14			NO.7 brake open power-		X1:14		
		15		X4:15			NO.7 brake fast stop+		X1:15		
		16		X4:16			NO.7 brake fast stop-		X1:16		
		17		X4:17			NO.9 brake open power+		X1:17		
		18		X4:18			NO.9 brake open power-		X1:18		
		19		X4:19			NO.9 brake fast stop+		X1:19		
		20		X4:20			NO.9 brake fast stop-		X1:20		
		21		X4:21			NO.11 brake open power+		X1:21		
		22		X4:22			NO.11 brake open power-		X1:22		
		23		X4:23			NO.11 brake fast stop+		X1:23		
		24		X4:24			NO.11 brake fast stop-		X1:24		
		25		X4:25					X1:25		
		26		X4:26					X1:26		
		27		X4:27					X1:27		
		28		X4:28					X1:28		
103	2*1.5	1		X4:29		√	leg left absolute encoder power 24V+		X1:29		
		2		X4:30			leg left absolute encoder power 0V		X1:30		
1112	10*1.5	1		X2：29		√	common port of NO.1 motor temp. PT100		X2：29		
		2		X2：30			NO.1 motor temp. PT100-		X2：30		
		3		X2：31			NO.3 motor temp. PT100-		X2：32		
		4		X2：32			NO.5 motor temp. PT100-		X2：34		
		5		X2：33			NO.7 motor temp. PT100-		X2：36		
		6		X2：34			NO.9 motor temp. PT100-		X2：38		
		7		X2：35			NO.11 motor temp. PT100-		X2：40		
1114	3*1.5	1		X4:31		√	overspeed switch		X1:31		
		2		X4:32			overspeed switch		X1:32		
		3		X4:33			overspeed switch		X1:33		

设计	
校对	
审核	
工艺	
标准	
批准	

★=不由WMMP提供

★

标记	数量	修改单号	签字	日期
设计				
校核				
审核				
标检				
审定				
批准				

1320T Electric Rack and Pinion Jacking System

Electric System Cable Connection Dwg.

所属装配图号	0422PTS28A-01-03-00WG
图号	0422PTS28A-01-03-09WG
标记	S
版本	
重量	
比例	1:1
共 18 页	第 8 页

WMMP 武汉船用机械有限责任公司

0422PTS28A-01-03-09WG

cable number	type specification	line num./ colour	origin device name	terminal	shorting	shield ground	signal name	destination shorting	terminal	name	shield ground
1120	27*1.5	1	NO.1 leg control	X3:1		√	common of input signal		X2:1	NO.1 leg NO.2 junction box	√
		2		X3:2			NO.2 brake open signal		X2:2		
		3		X3:3			NO.2 brake wear signal		X2:3		
		4		X3:4			NO.2 brake high temp. signal		X2:4		
		5		X3:5			NO.4 brake open signal		X2:6		
		6		X3:6			NO.4 brake wear signal		X2:7		
		7		X3:7			NO.4 brake high temp. signal		X2:8		
		8		X3:8			NO.6 brake open signal		X2:10		
		9		X3:9			NO.6 brake wear signal		X2:11		
		10		X3:10			NO.6 brake high temp. signal		X2:12		
		11		X3:11			NO.8 brake open signal		X2:14		
		12		X3:12			NO.8 brake wear signal		X2:15		
		13		X3:13			NO.8 brake high temp. signal		X2:16		
		14		X3:14			NO.10 brake open signal		X2:18		
		15		X3:15			NO.10 brake wear signal		X2:19		
		16		X3:16			NO.10 brake high temp. signal		X2:20		
		17		X3:17			NO.12 brake open signal		X2:22		
		18		X3:18			NO.12 brake wear signal		X2:23		
		19		X3:19			NO.12 brake high temp. signal		X2:24		
		20		X3:20					X2:25		
		21		X3:21					X2:26		
		22		X3:22					X2:28		
106	2*4	1	NO.1 leg control	X0：5		√	heater power +		X3:1	NO.1 leg NO.2 junction box	√
		2		X0：6			heater power -		X3:2		

cable number	type specification	line num./ colour	origin device name	terminal	shorting	shield ground	signal name	destination device shorting	terminal	name	shield ground
1121	30*1.5	1	NO.1 leg control unit	X5:1		√	NO.2 brake open power+		X1:1	NO.1 leg NO.2 junction box	√
		2		X5:2			NO.2 brake open power-		X1:2		
		3		X5:3			NO.2 brake fast stop+		X1:3		
		4		X5:4			NO.2 brake fast stop-		X1:4		
		5		X5:5			NO.4 brake open power+		X1:5		
		6		X5:6			NO.4 brake open power-		X1:6		
		7		X5:7			NO.4 brake fast stop+		X1:7		
		8		X5:8			NO.4 brake fast stop-		X1:8		
		9		X5:9			NO.6 brake open power+		X1:9		
		10		X5:10			NO.6 brake open power-		X1:10		
		11		X5:11			NO.6 brake fast stop+		X1:11		
		12		X5:12			NO.6 brake fast stop-		X1:12		
		13		X5:13			NO.8 brake open power+		X1:13		
		14		X5:14			NO.8 brake open power-		X1:14		
		15		X5:15			NO.8 brake fast stop+		X1:15		
		16		X5:16			NO.8 brake fast stop-		X1:16		
		17		X5:17			NO.10 brake open power+		X1:17		
		18		X5:18			NO.10 brake open power-		X1:18		
		19		X5:19			NO.10 brake fast stop+		X1:19		
		20		X5:20			NO.10 brake fast stop-		X1:20		
		21		X5:21			NO.12 brake open power+		X1:21		
		22		X5:22			NO.12 brake open power-		X1:22		
		23		X5:23			NO.12 brake fast stop+		X1:23		
		24		X5:24			NO.12 brake fast stop-		X1:24		
		25		X5:25					X1:25		
		26		X5:26					X1:26		
		27		X5:27					X1:27		
		28		X5:28					X1:28		
1122	10*1.5	1		X3：29			common port of NO.2 motor temp. PT100		X2：29		
		2		X3：30			NO.2 motor temp. PT100-		X2：30		
		3		X3：31			NO.4 motor temp. PT100-		X2：32		
		4		X3：32			NO.6 motor temp. PT100-		X2：34		
		5		X3：33			NO.8 motor temp. PT100-		X2：36		
		6		X3：34			NO.10 motor temp. PT100-		X2：38		
		7		X3：35			NO.12 motor temp. PT100-		X2：40		
105	2*1.5	1		X5:29			leg right absolute encoder power 24V+		X1:29		
		2		X5:30			leg right absolute encoder power 0V		X1:30		

设计	
校对	
审核	
工艺	
标准	
批准	

★=不由WMMP提供

标记	数量	修改单号	签字	日期
设计				
校核				
审核				
标检				
审定				
批准				

1320T Electric Rack and Pinion Jacking System

Electric System Cable Connection Dwg.

所属装配图号	0422PTS28A-01-03-00WG
图号	0422PTS28A-01-03-09WG
标记	S
版本	
重量	
比例	1:1
共 18 页	第 9 页

武汉船用机械有限责任公司

0422PTS28A-1-03-09WG

cable number	type specification	line num./ colour	origin device name	origin device terminal	origin device shorting	shield ground	signal name	destination device shorting	destination device terminal	destination device name	shield ground
1140	5*1.5	1	NO.1 leg NO.1 junction box	X2:1		√	common of input signal		X1：11	NO.1 leg NO.1 motor	√
		2		X2:2			NO.1 brake open signal		X1：12		
		3		X2:3			NO.1 brake wear signal		X1：15		
		4		X2:4			NO.1 brake high temp. signal		X1：30		
1141	5*1.5	1		X2:5		√	common of input signal		X1：11	NO.1 leg NO.3 motor	√
		2		X2:6			NO.3 brake open signal		X1：12		
		3		X2:7			NO.3 brake wear signal		X1：15		
		4		X2:8			NO.3 brake high temp. signal		X1：30		
1142	5*1.5	1		X2:9		√	common of input signal		X1：11	NO.1 leg NO.5 motor	√
		2		X2:10			NO.5 brake open signal		X1：12		
		3		X2:11			NO.5 brake wear signal		X1：15		
		4		X2:12			NO.5 brake high temp. signal		X1：30		
1143	5*1.5	1		X2:13		√	common of input signal		X1：11	NO.1 leg NO.7 motor	√
		2		X2:14			NO.7 brake open signal		X1：12		
		3		X2:15			NO.7 brake wear signal		X1：15		
		4		X2:16			NO.7 brake high temp. signal		X1：30		
1144	5*1.5	1		X2:17		√	common of input signal		X1：11	NO.1 leg NO.9 motor	√
		2		X2:18			NO.9 brake open signal		X1：12		
		3		X2:19			NO.9 brake wear signal		X1：15		
		4		X2:20			NO.9 brake high temp. signal		X1：30		
1145	5*1.5	1		X2:21		√	common of input signal		X1：11	NO.1 leg NO.11 motor	
		2		X2:22			NO.11 brake open signal		X1：12		
		3		X2:23			NO.11 brake wear signal		X1：15		
		4		X2:24			NO.11 brake high temp. signal		X1：30		

cable number	type specification	line num./ colour	origin device name	origin device terminal	origin device shorting	shield ground	signal name	destination device shorting	destination device terminal	destination device name	shield ground
1152	5*1.5	1	NO.1 NO.1 junction box	X1:1		√	NO.1 brake open power+		retifier 1	leg1 NO.1 motor (retifier)	√
		2		X1:2			NO.1 brake open power-		retifier 2		
		3		X1:3			NO.1 brake fast stop+		retifier 3		
		4		X1:4			NO.1 brake fast stop-		retifier 4		
1153	5*1.5	1		X1:5		√	NO.3 brake open power+		retifier 1	leg1 NO.3 motor (retifier)	√
		2		X1:6			NO.3 brake open power-		retifier 2		
		3		X1:7			NO.3 brake fast stop+		retifier 3		
		4		X1:8			NO.3 brake fast stop-		retifier 4		
1154	5*1.5	1		X1:9		√	NO.5 brake open power+		retifier 1	leg1 NO.5 motor (retifier)	√
		2		X1:10			NO.5 brake open power-		retifier 2		
		3		X1:11			NO.5 brake fast stop+		retifier 3		
		4		X1:12			NO.5 brake fast stop-		retifier 4		
1155	5*1.5	1		X1:13		√	NO.7 brake open power+		retifier 1	leg1 NO.7 motor (retifier)	√
		2		X1:14			NO.7 brake open power-		retifier 2		
		3		X1:15			NO.7 brake fast stop+		retifier 3		
		4		X1:16			NO.7 brake fast stop-		retifier 4		
1156	5*1.5	1		X1:17		√	NO.9 brake open power+		retifier 1	leg1 NO.9 motor (retifier)	√
		2		X1:18			NO.9 brake open power-		retifier 2		
		3		X1:19			NO.9 brake fast stop+		retifier 3		
		4		X1:20			NO.9 brake fast stop-		retifier 4		
1157	5*1.5	1		X1:21		√	NO.11 brake open power+		retifier 1	leg1 NO.11 motor (retifier)	√
		2		X1:22			NO.11 brake open power-		retifier 2		
		3		X1:23			NO.11 brake fast stop+		retifier 3		
		4		X1:24			NO.11 brake fast stop-		retifier 4		
1212	2*1.5	1		X1:29		√	absolute encoder power 24V+		M12 pin:1	leg1 NO.1 absolute encoder	√
		2		X1:30			absolute encoder power 0V		M12 pin:3		
1195	3*1.5	1		X1:31		√	overspeed switch common		X1:1	leg 1 NO.1 increm.encoder junction box(9 motor)	√
		2		X1:32			overspeed switch R4		X1:2		
		3		X1:33			overspeed switchR3		X1:4		

设计	
校对	
审核	
工艺	
标准	
批准	

标记	数量	修改单号	签字	日期
设计				
校核				
审核				
标检				
审定				
批准				

1320T Electric Rack and Pinion Jacking System

Electric System Cable Connection Dwg.

所属装配图号	0422PTS28A-01-03-00WG
图号	0422PTS28A-01-03-09WG
标记	S
版本	
重量	
比例	1:1
共	18 页
第	10 页

WMMP 武汉船用机械有限责任公司

cable number	type specification	line num./ colour	origin device name	origin device terminal	origin device shorting	shield ground	signal name	destination device shorting	destination device terminal	destination device name	shield ground
1164	2*1.5	1	leg1 NO.1 junction box	X3:1		√	NO.1 motor heater power +		X1:1	leg1 NO.1 motor main junction box	√
		2		X3:2			NO.1 motor heater power -		X1:2		
1165	2*1.5	1		X3:3		√	NO.3 motor heater power +		X1:1	leg1 NO.3 motor main junction box	√
		2		X3:4			NO.3 motor heater power -		X1:2		
1166	2*1.5	1		X3:5		√	NO.5 motor heater power +		X1:1	leg1 NO.5 motor main junction box	√
		2		X3:6			NO.5 motor heater power -		X1:2		
1167	2*1.5	1		X3:7		√	NO.7 motor heater power +		X1:1	leg1 NO.7 motor main junction box	√
		2		X3:8			NO.7 motor heater power -		X1:2		
1168	2*1.5	1		X3:9		√	NO.9 motor heater power +		X1:1	leg1 NO.9 motor main junction box	√
		2		X3:10			NO.9 motor heater power -		X1:2		
1169	2*1.5	1		X3:11		√	NO.11motor heater power +		X1:1	leg1 leg11 motor main junction box	√
		2		X3:12			NO.11 motor heater power -		X1:2		
1176	2*1.5	1		X3:15		√	NO.1 motor motor brake heater power +		X1:28	NO.1 NO.1 motor assist junction box	√
		2		X3:16			NO.1 motor motor brake heater power -		X1:29		
1177	2*1.5	1		X3:17		√	NO.3 motor motor brake heater power +		X1:28	NO.1 NO.3 motor assist junction box	√
		2		X3:18			NO.3 motor motor brake heater power -		X1:29		
1178	2*1.5	1		X3:19		√	NO.5 motor motor brake heater power +		X1:28	NO.1 NO.5 motor assist junction box	√
		2		X3:20			NO.5 motor motor brake heater power -		X1:29		
1179	2*1.5	1		X3:21		√	NO.7 motor motor brake heater power +		X1:28	NO.1 NO.7 motor assist junction box	√
		2		X3:22			NO.7 motor motor brake heater power -		X1:29		
1180	2*1.5	1		X3:23		√	NO.9 motor motor brake heater power +		X1:28	NO.1 NO.9 motor assist junction box	√
		2		X3:24			NO.9 motor motor brake heater power -		X1:29		
1181	2*1.5	1		X3:25		√	NO.11 motor motor brake heater power +		X1:28	NO.1 NO.11 motor assist junction box	√
		2		X3:26			NO.11 motor motor brake heater power -		X1:29		
1188	2*1.5	1	leg1 NO.1 junction box	X2:29		√	NO.1 motor thermoswitch +		X1:3	leg1 NO.1 motor main junction box	√
		2		X2:30			NO.1 motor thermoswitch -		X1:4		
1189	2*1.5	1		X2:31		√	NO.3 motor thermoswitch +		X1:3	leg1 NO.3 motor main junction box	√
		2		X2:32			NO.3 motor thermoswitch -		X1:4		
1190	2*1.5	1		X2:33		√	NO.5 motor thermoswitch +		X1:3	leg1 NO.5 motor main junction box	√
		2		X2:34			NO.5 motor thermoswitch -		X1:4		
1191	2*1.5	1		X2:35		√	NO.7 motor thermoswitch +		X1:3	leg1 NO.7 motor main junction box	√
		2		X2:36			NO.7 motor thermoswitch -		X1:4		
1192	2*1.5	1		X2:37		√	NO.9 motor thermoswitch +		X1:3	leg1 NO.9 motor main junction box	√
		2		X2:38			NO.9 motor thermoswitch -		X1:4		
1193	2*1.5	1		X2:39		√	NO.11 motor thermoswitch +		X1:3	leg11 NO.11 motor main junction box	√
		2		X2:40			NO.11 motor thermoswitch -		X1:4		

设计	
校对	
审核	
工艺	
标准	
批准	

标记	数量	修改单号	签字	日期
设计				
校核				
审核				
标检				
审定				
批准				

1320T Electric Rack and Pinion Jacking System

Electric System Cable Connection Dwg.

所属装配图号	0422PTS28A-01-03-00WG
图号	0422PTS28A-01-03-09WG
标记	S
版本	
重量	
比例	1:1
共 18 页	第 11 页

武汉船用机械有限责任公司

0422PTS28A-01-03-09WG

cable number	type specification	line num./ colour	origin device name	origin device terminal	origin device shorting	shield ground	signal name	destination device shorting	destination device terminal	destination device name	shield ground
1230	5*1.5	1	leg1 NO.2 junction box	X2:1		√	common of input signal		X1：11	leg1 NO.2 motor	√
		2		X2:2			NO.2 brake open signal		X1：12		
		3		X2:3			NO.2 brake wear signal		X1：15		
		4		X2:4			NO.2 brake high temp. signal		X1：30		
1231	5*1.5	1		X2:5		√	common of input signal		X1：11	leg1 NO.4 motor	√
		2		X2:6			NO.4 brake open signal		X1：12		
		3		X2:7			NO.4 brake wear signal		X1：15		
		4		X2:8			NO.4 brake high temp. signal		X1：30		
1232	5*1.5	1		X2:9		√	common of input signal		X1：11	leg1 NO.6 motor	√
		2		X2:10			NO.6brake open signal		X1：12		
		3		X2:11			NO.6brake wear signal		X1：15		
		4		X2:12			NO.6brake high temp. signal		X1：30		
1233	5*1.5	1		X2:13		√	common of input signal		X1：11	leg1 NO.8 motor	√
		2		X2:14			NO.8brake open signal		X1：12		
		3		X2:15			NO.8brake wear signal		X1：15		
		4		X2:16			NO.8brake high temp. signal		X1：30		
1234	5*1.5	1		X2:17		√	common of input signal		X1：11	leg1 NO.10 motor	√
		2		X2:18			NO.10brake open signal		X1：12		
		3		X2:19			NO.10brake wear signal		X1：15		
		4		X2:20			NO.10brake high temp. signal		X1：30		
1235	5*1.5	1		X2:21		√	common of input signal		X1：11	leg1 NO.12 motor	√
		2		X2:22			NO.12brake open signal		X1：12		
		3		X2:23			NO.12brake wear signal		X1：15		
		4		X2:24			NO.12brake high temp. signal		X1：30		

cable number	type specification	line num./ colour	origin device name	origin device terminal	origin device shorting	shield ground	signal name	destination device shorting	destination device terminal	destination device name	shield ground
1242	5*1.5	1	leg1 NO.2 junction box	X1:1		√	NO.2 brake open power+		retifier 1	leg1 NO.2 motor (retifier)	√
		2		X1:2			NO.2 brake open power-		retifier 2		
		3		X1:3			NO.2 brake fast stop+		retifier 3		
		4		X1:4			NO.2 brake fast stop-		retifier 4		
1243	5*1.5	1		X1:5		√	NO.4 brake open power+		retifier 1	leg1 NO.4 motor (retifier)	√
		2		X1:6			NO.4 brake open power-		retifier 2		
		3		X1:7			NO.4 brake fast stop+		retifier 3		
		4		X1:8			NO.4 brake fast stop-		retifier 4		
1244	5*1.5	1		X1:9		√	NO.6brake open power+		retifier 1	leg1 NO.6 motor (retifier)	√
		2		X1:10			NO.6brake open power-		retifier 2		
		3		X1:11			NO.6brake fast stop+		retifier 3		
		4		X1:12			NO.6brake fast stop-		retifier 4		
1245	5*1.5	1		X1:13		√	NO.8brake open power+		retifier 1	leg1 NO.8 motor (retifier)	√
		2		X1:14			NO.8brake open power-		retifier 2		
		3		X1:15			NO.8brake fast stop+		retifier 3		
		4		X1:16			NO.8brake fast stop-		retifier 4		
1246	5*1.5	1		X1:17		√	NO.10brake open power+		retifier 1	leg1 NO.10 motor (retifier)	√
		2		X1:18			NO.10brake open power-		retifier 2		
		3		X1:19			NO.10brake fast stop+		retifier 3		
		4		X1:20			NO.10brake fast stop-		retifier 4		
1247	5*1.5	1		X1:21		√	NO.12brake open power+		retifier 1	leg1 NO.12 motor (retifier)	√
		2		X1:22			NO.12brake open power-		retifier 2		
		3		X1:23			NO.12brake fast stop+		retifier 3		
		4		X1:24			NO.12brake fast stop-		retifier 4		
1297	2*1.5	1		X1:29		√	absolute encoder power 24V+		M12 pin:1	leg1 NO.1 absolute encoder	√
		2		X1:30			absolute encoder power 0V		M12 pin:3		

★=不由WMMP提供

★

设计	
校对	
审核	
工艺	
标准	
批准	

标记	数量	修改单号	签字	日期
设计				
校核				
审核				
标检				
审定				
批准				

1320T Electric Rack and Pinion Jacking System

Electric System Cable Connection Dwg.

所属装配图号	0422PTS28A-01-03-00WG
图号	0422PTS28A-01-03-09WG
标记	S
版本	
重量	
比例	1:1
共 19 页	第 12 页

WMMP 武汉船用机械有限责任公司

cable number	type specification	line num./ colour	origin device name	origin device terminal	origin device shorting	shield ground	signal name	destination device shorting	destination device terminal	destination device name	shield ground
1254	2*1.5	1	leg1 NO.2 junction box	X3:1		√	NO.2 motor heater power +		X1:1	leg1 NO.2 motor main junction box	√
		2		X3:2			NO.2 motor heater power -		X1:2		
1255	2*1.5	1		X3:3		√	NO.4 motor heater power +		X1:1	leg1 NO.4 motor main junction box	√
		2		X3:4			NO.4 motor heater power -		X1:2		
1256	2*1.5	1		X3:5		√	NO.6motor heater power +		X1:1	leg1 NO.6 motor main junction box	√
		2		X3:6			NO.6motor heater power -		X1:2		
1257	2*1.5	1		X3:7		√	NO.8motor heater power +		X1:1	leg1 NO.8 motor main junction box	√
		2		X3:8			NO.8motor heater power -		X1:2		
1258	2*1.5	1		X3:9		√	NO.10motor heater power +		X1:1	leg1 NO.10 motor main junction box	√
		2		X3:10			NO.10motor heater power -		X1:2		
1259	2*1.5	1		X3:11		√	NO.12motor heater power +		X1:1	leg1 NO.12 motor main junction box	√
		2		X3:12			NO.12motor heater power -		X1:2		
1266	2*1.5	1		X3:15		√	NO.2 motor E-brake heater power +		X1:28	leg1 NO.2 motor assist junction box	√
		2		X3:16			NO.2 motor E-brake heater power -		X1:29		
1267	2*1.5	1		X3:17		√	NO.4 motor E-brake heater power +		X1:28	leg1 NO.4 motor assist junction box	√
		2		X3:18			NO.4 motor E-brake heater power -		X1:29		
1268	2*1.5	1		X3:19		√	NO.6motor E-brake heater power +		X1:28	leg1 NO.6 motor assist junction box	√
		2		X3:20			NO.6motor E-brake heater power -		X1:29		
1269	2*1.5	1		X3:21		√	NO.8motor E-brake heater power +		X1:28	leg1 NO.8 motor assist junction box	√
		2		X3:22			NO.8motor E-brake heater power -		X1:29		
1270	2*1.5	1		X3:23		√	NO.10motor E-brake heater power +		X1:28	leg1 NO.10 motor assist junction box	√
		2		X3:24			NO.10motor E-brake heater power -		X1:29		
1271	2*1.5	1		X3:25		√	NO.12motor E-brake heater power +		X1:28	leg1 NO.12 motor assist junction box	√
		2		X3:26			NO.12motor E-brake heater power -		X1:29		
1278	2*1.5	1	leg1 NO.2 junction box	X2:29		√	NO.2 motor thermoswitch +		X1:3	leg1 NO.2 motor main junction box	√
		2		X2:30			NO.2 motor thermoswitch -		X1:4		
1279	2*1.5	1		X2:31		√	NO.4 motor thermoswitch +		X1:3	leg1 NO.4 motor main junction box	√
		2		X2:32			NO.4 motor thermoswitch -		X1:4		
1280	2*1.5	1		X2:33		√	NO.6 motor thermoswitch +		X1:3	leg1 NO.6 motor main junction box	√
		2		X2:34			NO.6 motor thermoswitch -		X1:4		
1281	2*1.5	1		X2:35		√	NO.8 motor thermoswitch +		X1:3	leg1 NO.8 motor main junction box	√
		2		X2:36			NO.8 motor thermoswitch -		X1:4		
1282	2*1.5	1		X2:37		√	NO.10 motor thermoswitch +		X1:3	leg1 NO.10 motor main junction box	√
		2		X2:38			NO.10 motor thermoswitch -		X1:4		
1283	2*1.5	1		X2:39		√	NO.12 motor thermoswitch +		X1:3	leg1 NO.12 motor main junction box	√
		2		X2:40			NO.12 motor thermoswitch -		X1:4		

设计	
校对	
审核	
工艺	
标准	
批准	

标记	数量	修改单号	签字	日期
设计				
校核				
审核				
标检				
审定				
批准				

1320T Electric Rack and Pinion Jacking System

Electric System Cable Connection Dwg.

所属装配图号	0422PTS28A-01-03-00WG
图号	0422PTS28A-01-03-09WG
标记	S
版本	
重量	
比例	1:1
共 18 页	第 13 页

WMMP 武汉船用机械有限责任公司

cable number	type specification	line num./ colour	origin device name	origin device terminal	origin device shorting	shield ground	signal name	destination device shorting	destination device terminal	destination device name	shield ground
1361	14*1.5	1	leg1 control unit	X14:1		√	common of input signal		X1:27	leg1 lubrication control box	√
		2		X14:4			lubrication remote control		X1:28		
		3		X14:3			lubrication running signal		X1:29		
		4		X14:5			lubrication alarm		X1:30		
		5		X14:6			lubrication low oil		X1:31		
		6		X14:7			spare		/		
		7		X14:8			spare		/		
		8		X14:9			spare		/		
		9		X14:9			spare		/		
		10		X14:10			common of output signal		X2:22		
		11		X14:11			lubrication start		X2:23		
		12		X14:12			lubrication stop		X2:25		
		13		X14:13			emer. stop+		X2:20		
		14		X14:14			emer. stop-		X2:21		
1362	14*1.5	1	leg1 control unit	X9:1		√	common of output signal		X2:1	leg1 local control box	√
		2		X9:2			local power indication		X2:2		
		3		X9:3			local control indication		X2:3		
		4		X9:4			motor brake open indication		X2:4		
		5		X9:5			leg raise indication		X2:5		
		6		X9:6			leg lower indication		X2:6		
		7		X9:7			spare		/		
		8		X9:8			spare		/		
		9		X9:9			alarm indication		X2:7		
		10		X9:10			buzzer		X2:8		
1364	2*1.5	1		X9:11			emer. stop+		X2:9		
		2		X9:12			emer. stop-		X2:10		
1363	27*1.5	1	leg1 control unit	X8:1		√	common of input signal	√	X1:1	leg1 local control box	√
		2		X8:2			local control on		X1:2		
		3		X8:3			leg raise		X1:3		
		4		X8:4			stop		X1:4		
		5		X8:5			leg lower		X1:5		
		6		X8:6			leg left selection		X1:6		
		7		X8:7			leg right selection		X1:7		
		8		X8:8			NO.1 motor selection		X1:8		
		9		X8:9			NO.2 motor selection		X1:9		
		10		X8:10			NO.3 motor selection		X1:10		
		11		X8:11			NO.4 motor selection		X1:11		
		12		X8:12			NO.5 motor selection		X1:12		
		13		X8:13			NO.6motor selection		X1:13		
		14		X8:14			NO.7 motor selection		X1:14		
		15		X8:16			single motor brake open		X1:15		
		16		X8:17			Reset		X1:16		
		17		X8:18			lamp test/mute		X1:17		
		18		X8:19			emergency control ON		X1:18		

设计	
校对	
审核	
工艺	
标准	
批准	

标记	数量	修改单号	签字	日期
设计				
校核				
审核				
标检				
审定				
批准				

1320T Electric Rack and Pinion Jacking System

Electric System Cable Connection Dwg.

所属装配图号	0422PTS28A-01-03-00WG
图号	0422PTS28A-01-03-09WG
标记	S
版本	
重量	
比例	1:1
共	18 页
第	14 页

武汉船用机械有限责任公司

0422PTS28A-1-03-09WG

cable number	type specification	line num./ colour	origin device name	origin device terminal	origin device shorting	shield ground	signal name	destination device shorting	destination device terminal	destination device name	shield ground
1366	10*1.5	1	leg1 control unit	X13:1		√	phase-shifting transformer high temp. alarm+		X1:3	leg1 phase-shifting transformer	√
		2		X13:2			phase-shifting transformer high temp. alarm-		X1:4		
		3		X13:3			phase-shifting transformer high temp. stop+		X1:5		
		4		X13:4			phase-shifting transformer high temp. stop-		X1:6		
		5		X13:5			phase-shifting transformer fan running+		X1:11		
		6		X13:6			phase-shifting transformer fan running-		X1:12		
		7		X13:7			temp. controller fault+		X1:7		
		8		X13:8			temp. controller fault-		X1:8		
1365	7*2*0.75	9		X13:9			coil a1 temp. PT100+		X1:14		
		10		X13:10			coil a1 temp. PT100-		X1:15		
		11		X13:11			coil b1 temp. PT100+		X1:17		
		12		X13:12			coil b1 temp. PT100-		X1:18		
		13		X13:13			coil c1 temp. PT100+		X1:20		
		14		X13:14			coil c1 temp. PT100-		X1:21		
		15		X13:15			coil a2 temp. PT100+		X1:23		
		16		X13:16			coil a2 temp. PT100-		X1:24		
		17		X13:17			coil b2 temp. PT100+		X1:26		
		18		X13:18			coil b2 temp. PT100-		X1:27		
		19		X13:19			coil c2 temp. PT100+		X1:29		
		20		X13:20			coil c2 temp. PT100-		X1:30		

cable number	type specification	line num./ colour	origin device name	origin device terminal	origin device shorting	shield ground	signal name	destination device shorting	destination device terminal	destination device name	shield ground
1375	4*2*0.75	1-1	leg1 VFD INU1 1.09	X94:8		√	NO.9 incremental encoder 24V+		X1:23	leg1 NO.9 motor (auxiliary junction box)	√
		1-2		X94:9			NO.9 incremental encoder 0V		X1:24		
		2-1		X94:1			NO.9 incremental encoder A+		X1:21		
		2-2		X94:2			NO.9 incremental encoder A-		X1:20		
		3-1		X94:3			NO.9 incremental encoder B+		X1:19		
		3-2		X94:4			NO.9 incremental encoder B-		X1:18		
		4-1		X94:5			NO.9 incremental encoder Z+		X1:17		
		4-2		X94:6			NO.9 incremental encoder Z-		X1:16		
		GND		X94:10			**cable shielding layer**		X1:22		
1376	4*2*0.75	1-1	leg1 VFD INU1 1.10	X94:8		√	NO.10 incremental encoder 24V+		X1:23	leg1 NO.10 motor (auxiliary junction box)	√
		1-2		X94:9			NO.10 incremental encoder 0V		X1:22		
		2-1		X94:1			NO.10 incremental encoder A+		X1:21		
		2-2		X94:2			NO.10 incremental encoder A-		X1:20		
		3-1		X94:3			NO.10 incremental encoder B+		X1:19		
		3-2		X94:4			NO.10 incremental encoder B-		X1:18		
		4-1		X94:5			NO.10 incremental encoder Z+		X1:17		
		4-2		X94:6			NO.10 incremental encoder Z-		X1:16		
		GND		X94:10			**cable shielding layer**		X1:22		

设计	
校对	
审核	
工艺	
标准	
批准	

标记	数量	修改单号	签字	日期
设计				
校核				
审核				
标检				
审定				
批准				

1320T Electric Rack and Pinion Jacking System

Electric System Cable Connection Dwg.

所属装配图号	0422PTS28A-01-03-00WG
图号	0422PTS28A-01-03-09WG
标记	S
版本	
重量	
比例	1:1
共 18 页	第 15 页

WMMP 武汉船用机械有限责任公司

0422PTS28A-1-03-09WG

cable number	type specification	line num./ colour	origin device name	origin device terminal	origin device shorting	shield ground	signal name	destination device shorting	destination device terminal	destination device name	shield ground
1370	10*1.5	1	leg1 control unit	X11:1		√	common		X29:3	leg1 VFD ACU	√
		2		X11:2			rectifier fault		X29:4		
		3		X11:3			rectifier running		X29:5		
		4		X11:4			brake unit fault		X29:6		
		5		X11:5			main breaker 1 state		X29:7		
		6		X11:6			main breaker 2 state		X29:8		
		7		X11:7			DC bus remote Control		X29:9		
1371	10*1.5	1		X11:8			common		X29:13		
		2		X11:9			emer. Stop reset		X29:14		
		3		X11:10			rectifier remote close		X29:15		
		4		X11:11			rectifier remote open		X29:16		
		5		X11:12			rectifier remote 、inverter、brake unit reset		X29:17		
		6		X11:13			spare		/		
		7		X11:14			spare		/		
1372	10*1.5	1		X16:1			emer. Stop feedback signal +		X29:26		
		2		X16:2			emer. Stop feedback signal -		X29:27		
		3		X16:3			auxiliary voltage connection monitoring +		X22：57		
		4		X16:4			auxiliary voltage connection monitoring-		X22：58		
		5		X16:5			ground fault alarm +		X90：25		
		6		X16:6			ground fault alarm -		X90：26		
		7		X16:7			heater feedback +		X22：47		
		8		X16:8			heater feedback -		X22：48		
116	2*2.5	1	leg1 control unit	X0:15		√	support VFD control auxi. power 220V/50HZ/1PH	control power	X3.1：1L	leg1 VFD ACU	√
		2		X0:16			support VFD control auxi. power 220V/50HZ/2PH		X3.1：2N		
117	2*2.5	1		X0:11		√	support VFD control power 220V/50HZ/1PH	heater	X3.2：1L		√
		2		X0:12			support VFD control power 220V/50HZ/1PH		X3.2：2N		
118	2*2.5	1		X0:21		√	to leg control unit brake power220V/50HZ/1P	brake power	X10.1：1L		√
		2		X0:22			to leg control unitbrake power220V/50HZ/1P		X10.1：2N		
1373	2*1.5	1		X11：15		√	VFD emer. Stop signal+		X29：22		√
		2		X11：16			VFD emer. Stop signa-		X29：23		
1374	2*2*0.75	1-1	leg1 control unit	X12：1		√	brake temp. S+(PT100)		X1：3	leg1 brake resistor cabinet	√
		1-2		X12：2			brake temp. S-(PT100)		X1：4		
		2-1		X12：3			brake fan pressure switch +		X1：5		
		2-2		X12：4			brake fan pressure switch -		X1：6		
119	2*1.5	1		X0:9		√	heater power 220V/50HZ/1PH		X1：1		√
		2		X0:10			heater power 220V/50HZ/1PH		X1::2		
115	5*1.5	1	leg1 control unit	X0：19		√	power cabinet fan contactor power 220V ~		X0：1	power cabinet	√
		2		X0：20			power cabinet fan contactor power 220V ~		X0：2		
		3		X12：7			power cabinet fan control signal +		X0：3		
		4		X12：8			power cabinet fan control signal -		X0：4		
1360	2*1.5	1		X16：9		√	power cabinet fan switch close feedback +		X0：5		√
		2		X16：10			power cabinet fan switch close feedback -		X0：6		

设计	
校对	
审核	
工艺	
标准	
批准	

标记	数量	修改单号	签字	日期
设计				
校核				
审核				
标检				
审定				
批准				

1320T Electric Rack and Pinion Jacking System

Electric System Cable Connection Dwg.

所属装配图号	0422PTS28A-01-03-00WG
图号	0422PTS28A-01-03-09WG
标记	S
版本	
重量	
比例	1:1
共 18 页	第 16 页

WMIP 武汉船用机械有限责任公司

cable number	type specification	line num./ colour	origin device name	origin device terminal	origin device shorting	shield ground	signal name	destination device shorting	destination device terminal	destination device name	shield ground
1401	3*16+3*4	1	leg1 VFD INU1 1.01	X1：U2		√	NO.1 motor power U		U	leg1 NO.1 motor	√ 3 PE and shielding cables are grounded together
		2		X1：V2			NO.1 motor power V		V		
		3		X1：W2			NO.1 motor power W		W		
		4					PE				
		5					PE				
		6					PE				
1402	3*16+3*4	1	leg1 VFD INU1 1.02	X1：U2		√	NO.2 motor power U		U	leg1 NO.2 motor	√ 3 PE and shielding cables are grounded together
		2		X1：V2			NO.2 motor power V		V		
		3		X1：W2			NO.2 motor power W		W		
		4					PE				
		5					PE				
		6					PE				
1403	3*16+3*4	1	leg1 VFD INU1 1.03	X1：U2		√	NO.3 motor power U		U	leg1 NO.3 motor	√ 3 PE and shielding cables are grounded together
		2		X1：V2			NO.3 motor power V		V		
		3		X1：W2			NO.3 motor power W		W		
		4					PE				
		5					PE				
		6					PE				
1404	3*16+3*4	1	leg1 VFD INU1 1.04	X1：U2		√	NO.4 motor power U		U	leg1 NO.4 motor	√ 3 PE and shielding cables are grounded together
		2		X1：V2			NO.4 motor power V		V		
		3		X1：W2			NO.4 motor power W		W		
		4					PE				
		5					PE				
		6					PE				
1405	3*16+3*4	1	leg1 VFD INU1 1.05	X1：U2		√	NO.5 motor power U		U	leg1 NO.5 motor	√ 3 PE and shielding cables are grounded together
		2		X1：V2			NO.5 motor power V		V		
		3		X1：W2			NO.5 motor power W		W		
		4					PE				
		5					PE				
		6					PE				
1406	3*16+3*4	1	leg1 VFD INU1 1.06	X1：U2		√	NO.6motor power U		U	leg1 NO.6 motor	√ 3 PE and shielding cables are grounded together
		2		X1：V2			NO.6motor power V		V		
		3		X1：W2			NO.6motor power W		W		
		4					PE				
		5					PE				
		6					PE				

设计	
校对	
审核	
工艺	
标准	
批准	

标记	数量	修改单号	签字	日期
设计				
校核				
审核				
标检				
审定				
批准				

1320T Electric Rack and Pinion Jacking System

Electric System Cable Connection Dwg.

所属装配图号	0422PTS28A-01-03-00WG
图号	0422PTS28A-01-03-09WG
标记	S
版本	
重量	
比例	1:1
共 18 页	第 17 页

武汉船用机械有限责任公司

0422PTS28A-1-03-09WG

1407	3*16+3*4	1	leg1 VFD INU2 1.07	X1：U2		√	NO.7 motor power U		U	leg1 NO.7 motor	√ 3 PE and shielding cables are grounded together
		2		X1：V2			NO.7 motor power V		V		
		3		X1：W2			NO.7 motor power W		W		
		4					PE				
		5					PE				
		6					PE				
1408	3*16+3*4	1	leg1 VFD INU2 1.08	X1：U2		√	NO.8motor power U		U	leg1 NO.8 motor	√ 3 PE and shielding cables are grounded together
		2		X1：V2			NO.8motor power V		V		
		3		X1：W2			NO.8motor power W		W		
		4					PE				
		5					PE				
		6					PE				
1409	3*16+3*4	1	leg1 VFD INU2 1.09	X1：U2		√	NO.9 motor power U		U	leg1 NO.9 motor	√ 3 PE and shielding cables are grounded together
		2		X1：V2			NO.9 motor power V		V		
		3		X1：W2			NO.9 motor power W		W		
		4					PE				
		5					PE				
		6					PE				
1410	3*16+3*4	1	leg1 VFD INU2 1.10	X1：U2		√	NO.10motor power U		U	leg1 NO.10 motor	√ 3 PE and shielding cables are grounded together
		2		X1：V2			NO.10motor power V		V		
		3		X1：W2			NO.10motor power W		W		
		4					PE				
		5					PE				
		6					PE				
1411	3*16+3*4	1	leg1 VFD INU2 1.11	X1：U2		√	NO.11motor power U		U	leg1 NO.11 motor	√ 3 PE and shielding cables are grounded together
		2		X1：V2			NO.11motor power V		V		
		3		X1：W2			NO.11motor power W		W		
		4					PE				
		5					PE				
		6					PE				
1412	3*16+3*4	1	leg1 VFD INU2 1.12	X1：U2		√	NO.12motor power U		U	leg1 NO.12 motor	√ 3 PE and shielding cables are grounded together
		2		X1：V2			NO.12motor power V		V		
		3		X1：W2			NO.12motor power W		W		
		4					PE				
		5					PE				
		6					PE				

设计	
校对	
审核	
工艺	
标准	
批准	

标记	数量	修改单号	签字	日期
设计				
校核				
审核				
标检				
审定				
批准				

1320T Electric Rack and Pinion Jacking System

Electric System Cable Connection Dwg.

所属装配图号	0422PTS28A-01-03-00WG
图号	0422PTS28A-01-03-09WG
标记	S
版本	
重量	
比例	1:1
共 18 页	第 18 页

WXMIP 武汉船用机械有限责任公司

0422PTS28A-1-03-10

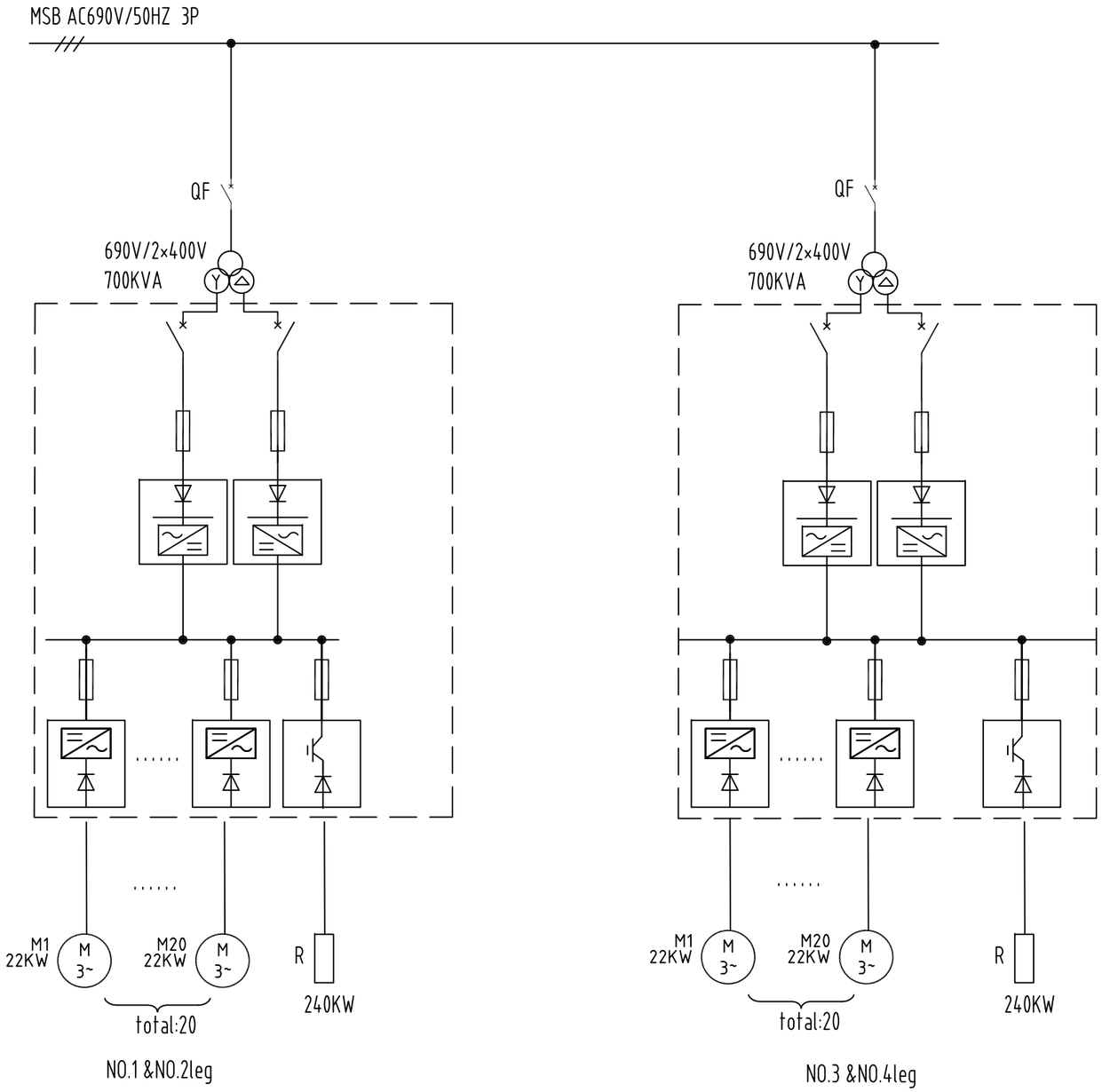

设计	
校对	
审核	
工艺	
标准	
批准	

标记	数量	修改单号	签字	日期
设计				
校核				
审核				
标检				
审定				
批准				

1320T Electric Rack and Pinion Jacking System

Distribution Single Line Dwg.

所属装配图号	0422PTS28A-1-03-00
图号	0422PTS28A-1-03-10

标记	版本	重量	比例
S			1:1

共 2 页 第 1 页

武汉船用机械有限责任公司

0422PTS28A-1-03-10

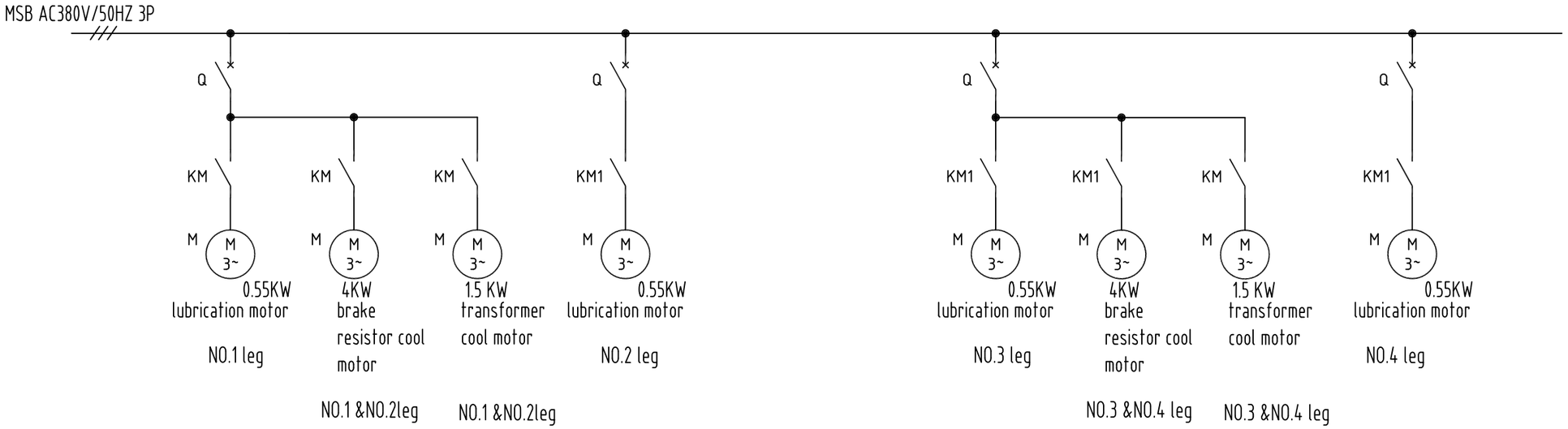

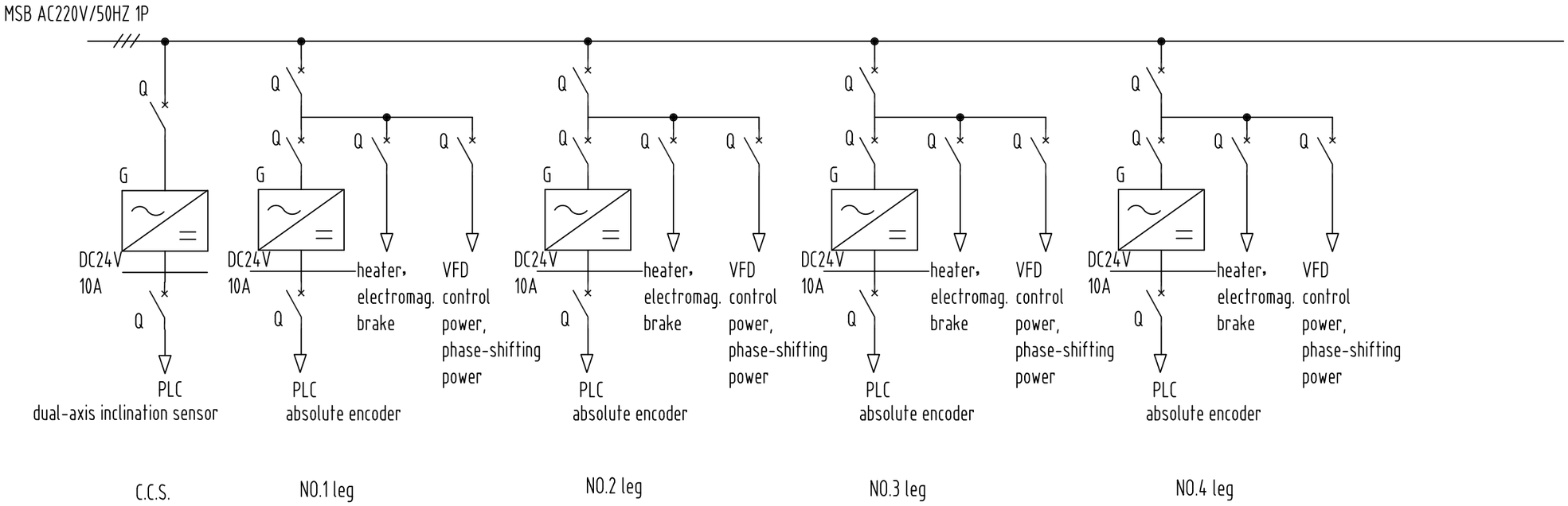

设计	
校对	
审核	
工艺	
标准	
批准	

标记	数量	修改单号	签字	日期
设计				
校核				
审核				
标检				
审定				
批准				

1320T Electric Rack and Pinion Jacking System

Distribution Single Line Dwg.

所属装配图号	0422PTS28A-1-03-00
图号	0422PTS28A-1-03-10
标记	S
版本	
重量	
比例	1:1
共 2 页	第 2 页

WMMP 武汉船用机械有限责任公司

0422PTS28A-1-03-12

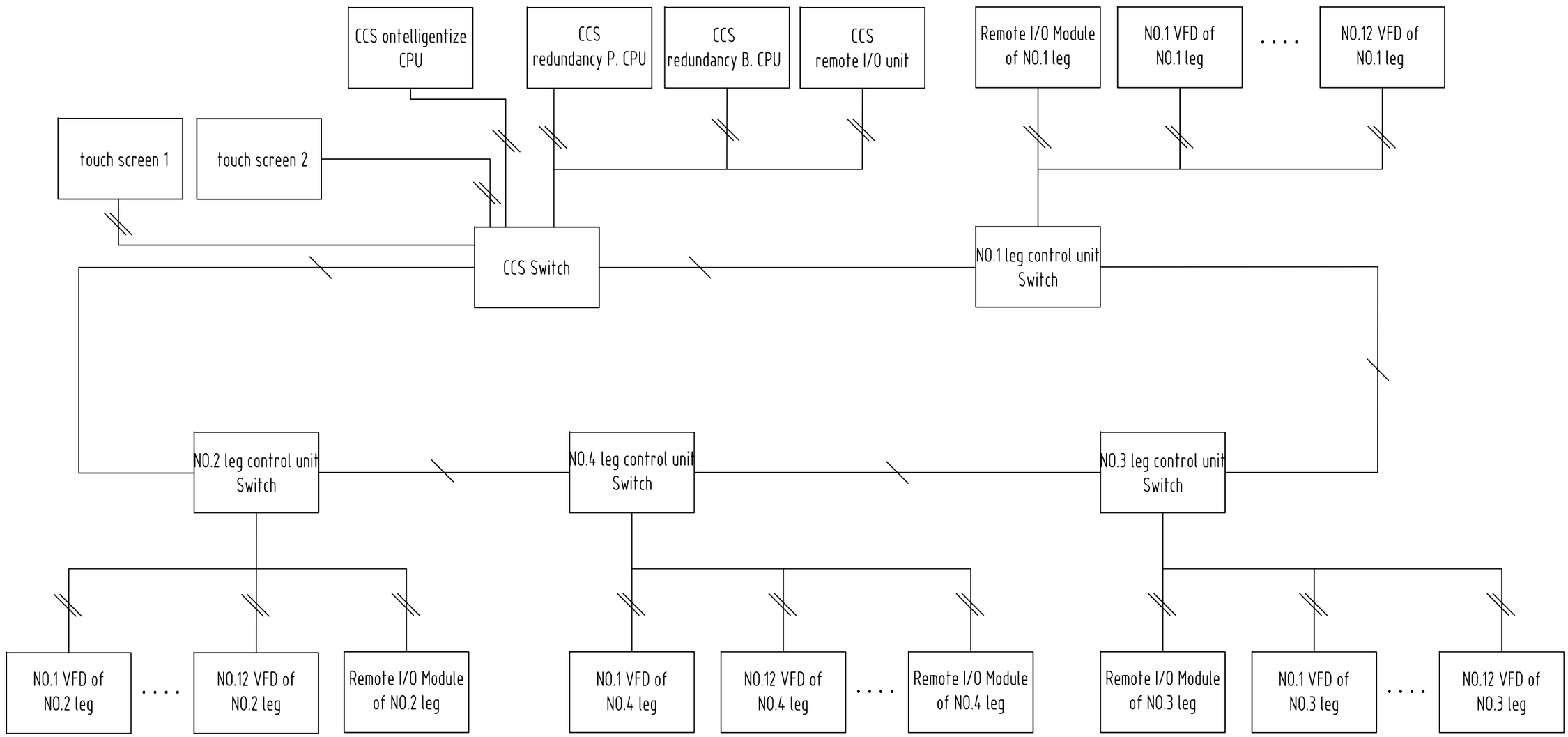

Profinet

多模光纤 fiber

设计	
校对	
审核	
工艺	
标准	
批准	

标记	数量	修改单号	签字	日期

设计	
校核	
审核	
标检	
审定	
批准	

1320T Electric Rack and Pinion Jacking System

Control Network Topology

所属装配图号	0422PTS28A-1-03-00
图号	0422PTS28A-1-03-12

标记	版本	重量	比例
S			1:1

共 1 页 第 1 页

武汉船用机械有限责任公司

0422PTS28A-1-03-11100

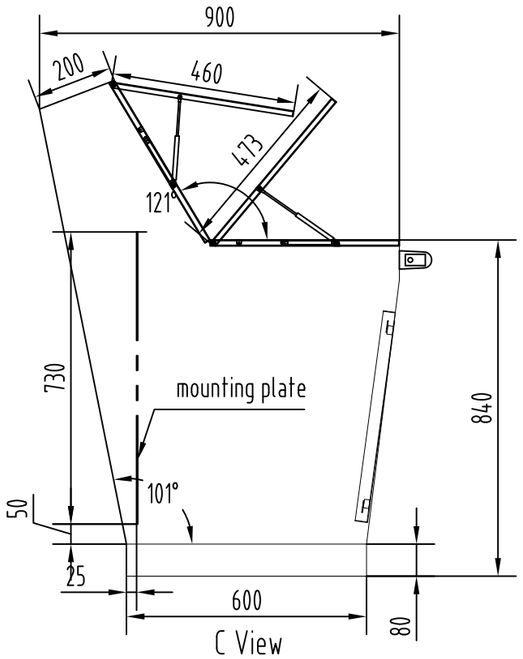

C View

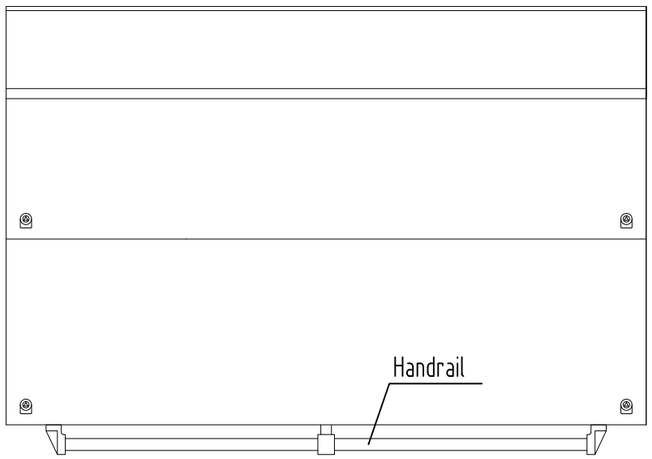

A View

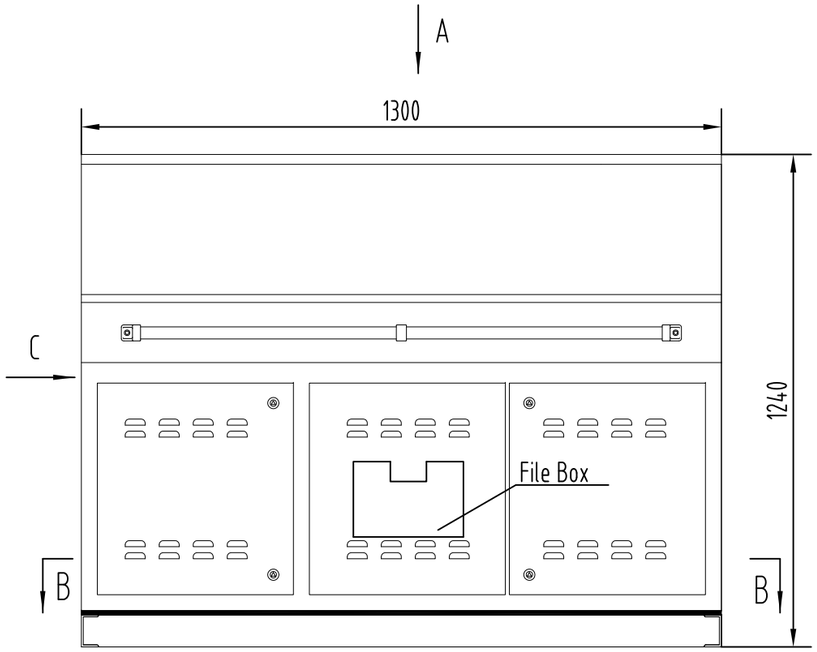

Front View

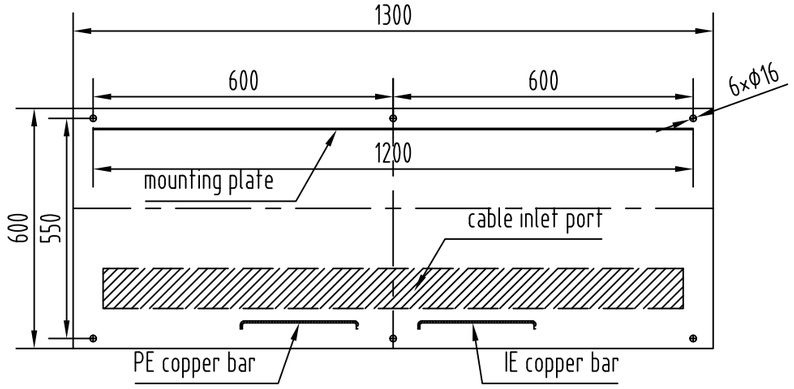

B-B

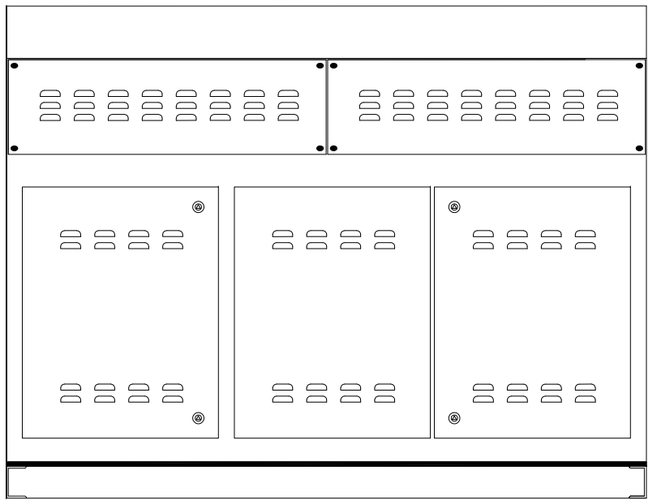

Back View

Material: Q235
Protection degree: IP23
Color: RAL7035
Weight: 350kg
Cable enter method: From the bottom

					1320T Electric Rack and Pinion Jacking System	所属装配图号	0422PTS28A-1-03-00	
标记	数量	修改单号	签字	日期	Central Control Station	图号	0422PTS28A-1-03-11100	
设计						标记	版本	重量	比例
校核						S			1:15
审核						共 2 页		第 1 页	
标检									
审定						武汉船用机械有限责任公司			
批准									

0422PTS28A-1-03-11100

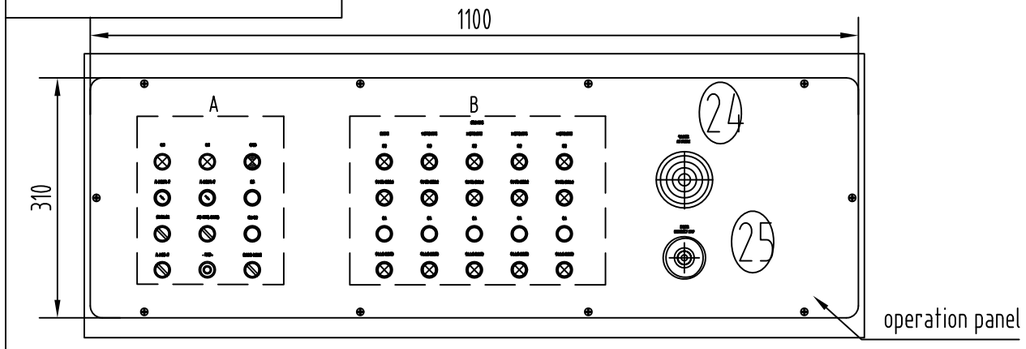

A 比例 1:2 (23)

综合控制
GENERAL CONTROL

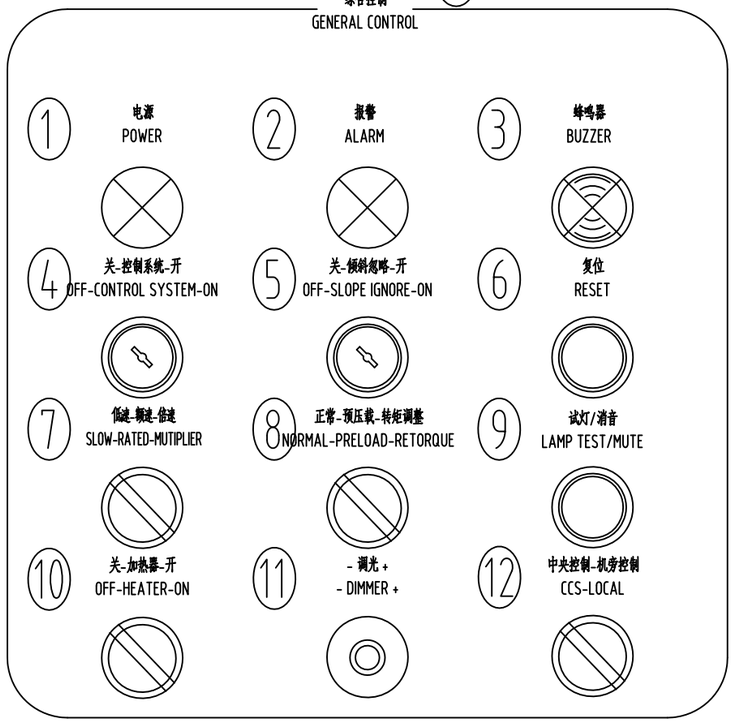

B 比例 1:2 (22)

升降自动控制
AUTO CONTROL

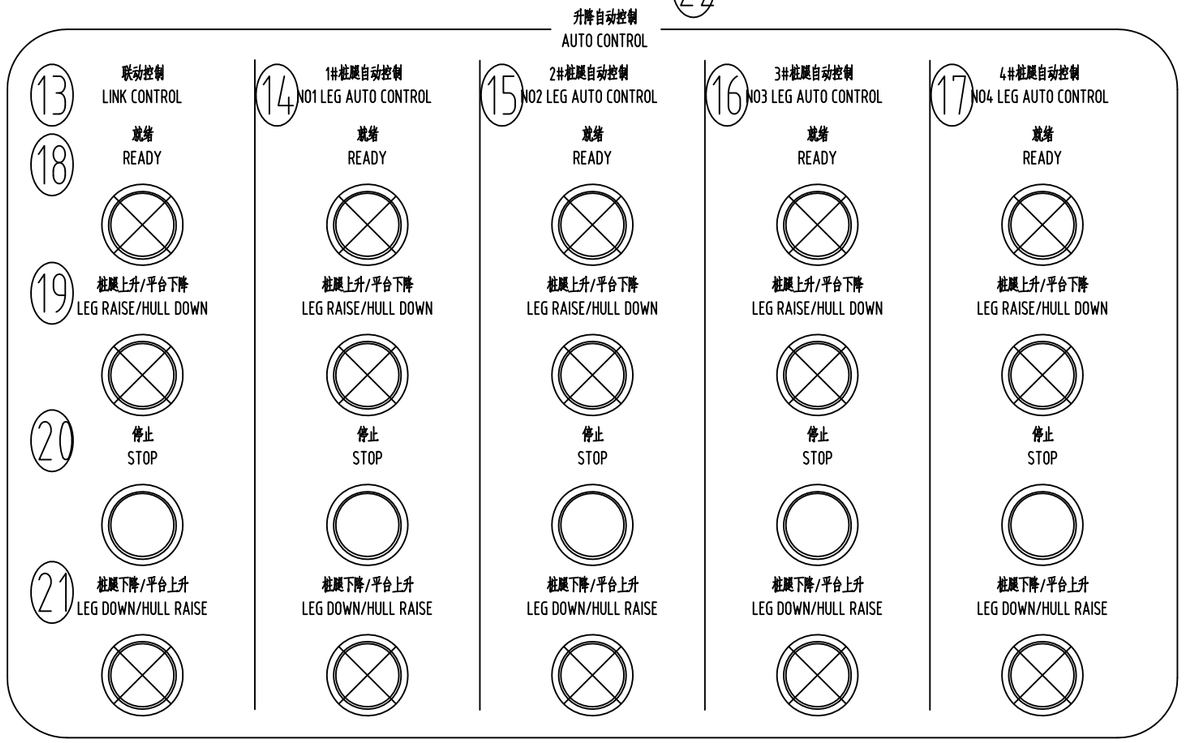

S.N.	CONTENT	S.N.	CONTENT
1	POWER	14	N01 LEG AUTO CONTROL
2	ALARM	15	N02 LEG AUTO CONTROL
3	BUZZER	16	N03 LEG AUTO CONTROL
4	OFF-CONTROL SYSTEM-ON	17	N04 LEG AUTO CONTROL
5	OFF-SLOPE IGNORE-ON	18	READY
6	RESET	19	LEG RAISE/HULL DOWN
7	SLOW-RATED-MUTIPLIER SPEED	20	STOP
8	NORMAL-PRELOAD-RETORQUE	21	LEG DOWN/HULL RAISE
9	LAMP TEST/MUTE	22	AUTO CONTROL
10	OFF-HEATER-ON	23	GENERAL CONTROL
11	- DIMMER +	24	AIR BUBBLE
12	CCS-LOCAL	25	EMERGENCY STOP
13	LINK CONTROL		

设计	
校对	
审核	
工艺	
标准	
批准	

标记	数量	修改单号	签字	日期
设计				
校核				
审核				
标检				
审定				
批准				

1320T Electric Rack and Pinion Jacking System

Central Control Station

所属装配图号	0422PTS28A-1-03-00
图号	0422PTS28A-1-03-11100
标记	S
版本	
重量	
比例	1:10
共 2 页	第 2 页

WMMP 武汉船用机械有限责任公司

0422PTS28A-1-03-11101

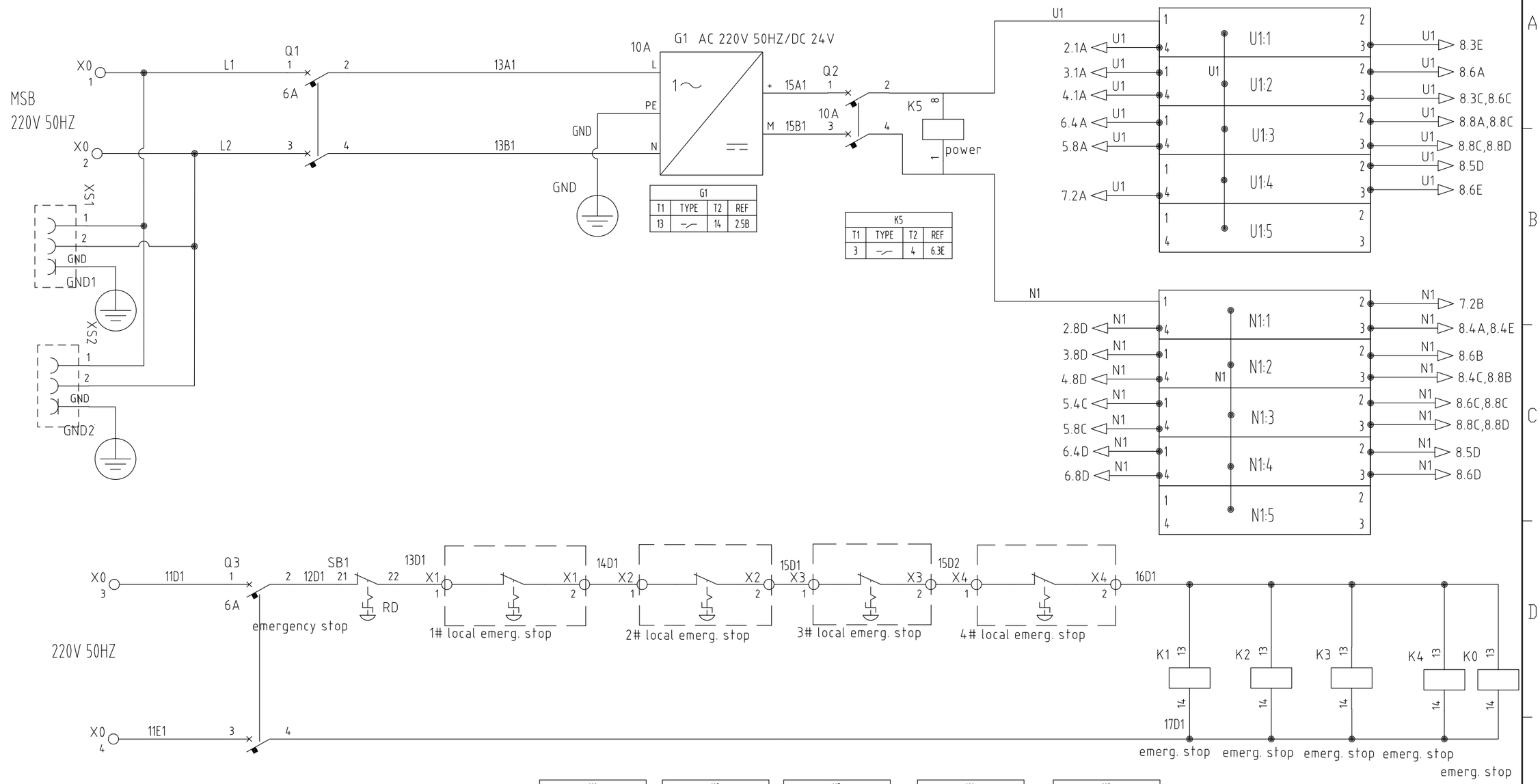

G1			
T1	TYPE	T2	REF
13		14	2.5B

K5			
T1	TYPE	T2	REF
3		4	6.3E

K1			
T1	TYPE	T2	REF
10		2	8.1A
11		3	8.1B
12		4	8.1B
9		5	8.1A

K2			
T1	TYPE	T2	REF
10		2	8.1C
11		3	8.1C
12		4	8.1C
9		5	8.1B

K3			
T1	TYPE	T2	REF
10		2	8.1D
11		3	8.1D
12		4	8.1E
9		5	8.1D

K4			
T1	TYPE	T2	REF
10		2	8.1E
11		3	8.1F
12		4	8.1F
9		5	8.1E

K0			
T1	TYPE	T2	REF
9		1	2.1B

NOTE:

1、The PLC module uses 0.5 mm^2 wire, and the rest of the electrical components uses 1.0 mm^2 wire.

2、The equipment in dotted box don't belong to Central Control Station.

设计	
校对	
审核	
工艺	
标准	
批准	

标记	数量	修改单号	签字	日期
设计				
校核				
审核				
标检				
审定				
批准				

1320T Electric Rack and Pinion Jacking System

Central Control Station Circuit Dwg.

所属装配图号	0422PTS28A-1-03-11100
图号	0422PTS28A-1-03-11101
标记	S
版本	
重量	
比例	1:1
共 8 页	第 1 页

武汉船用机械有限责任公司

0422PTS28A-1-03-11101

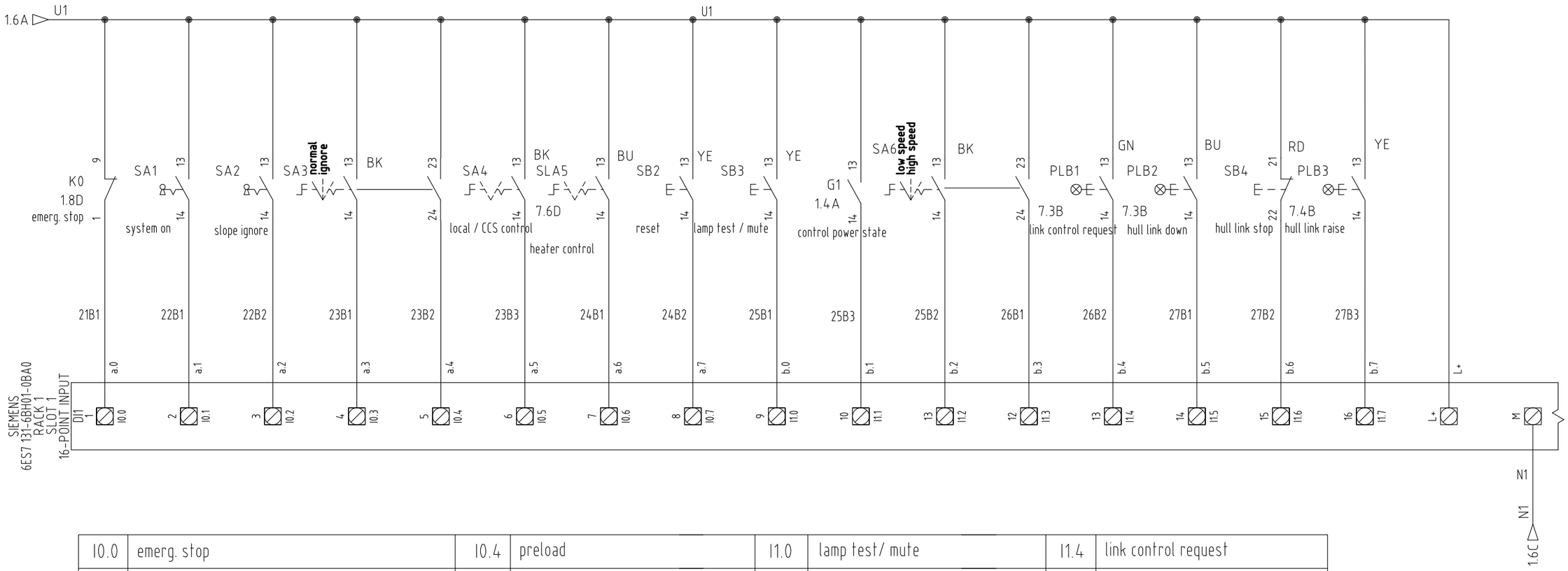

I0.0	emerg. stop	I0.4	preload	I1.0	lamp test/ mute	I1.4	link control request
I0.1	off-system-on	I0.5	local control - CCS control	I1.1	control power state	I1.5	hull link down
I0.2	off-slope ignore-on	I0.6	off-heater-on	I1.2	low speed	I1.6	hull link stop
I0.3	normal jacking system	I0.7	reset	I1.3	high speed	I1.7	hull link raise

NOTE:

1、The PLC module uses 0.5 mm^2 wire, and the rest of the electrical components uses 1.0 mm^2 wire.

2、The equipment in dotted box don't belong to Central Control Station.

设计	
校对	
审核	
工艺	
标准	
批准	

标记	数量	修改单号	签字	日期
设计				
校核				
审核				
标检				
审定				
批准				

1320T Electric Rack and Pinion Jacking System

Central Control Station Circuit Dwg.

所属装配图号	0422PTS28A-1-03-11100
图号	0422PTS28A-1-03-11101
标记 S	版本
重量	比例 1:1
共 8 页	第 2 页

武汉船用机械有限责任公司

0422PTS28A-1-03-11101

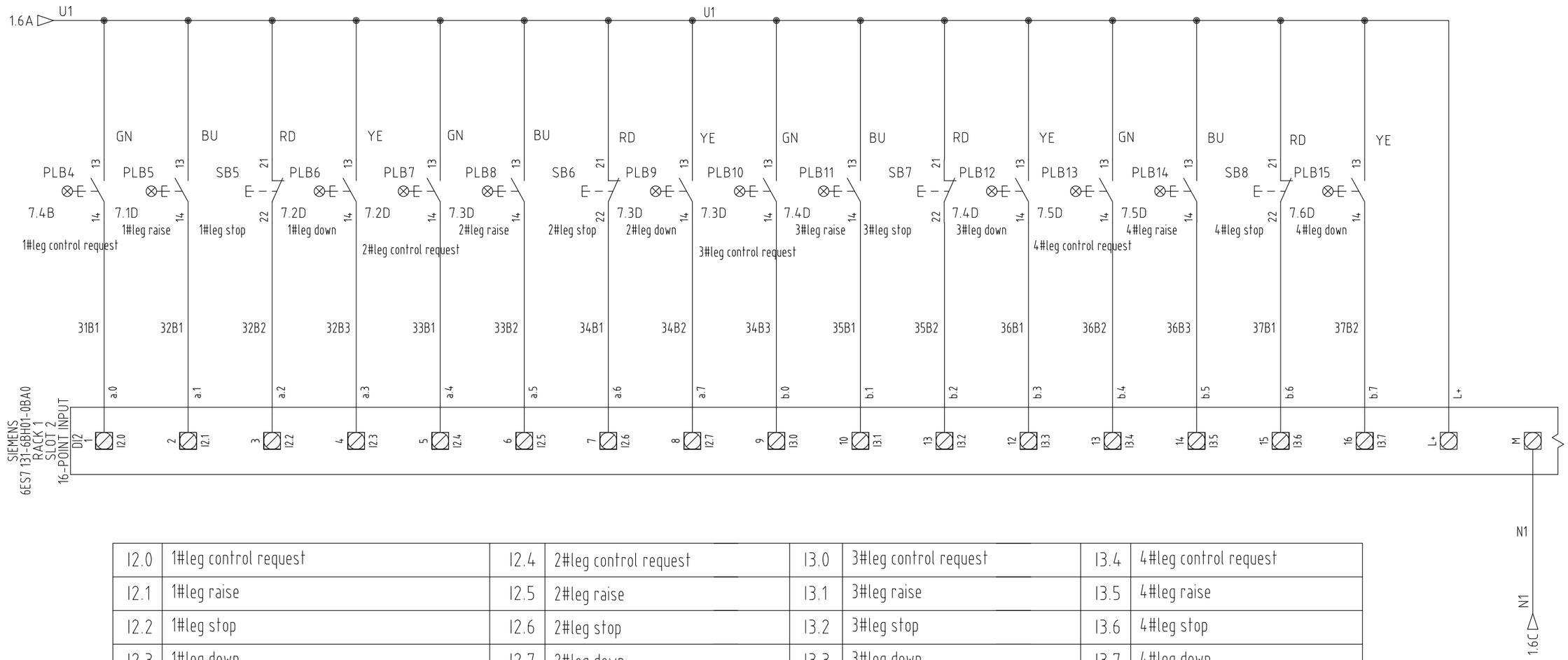

12.0	1#leg control request	12.4	2#leg control request	13.0	3#leg control request	13.4	4#leg control request
12.1	1#leg raise	12.5	2#leg raise	13.1	3#leg raise	13.5	4#leg raise
12.2	1#leg stop	12.6	2#leg stop	13.2	3#leg stop	13.6	4#leg stop
12.3	1#leg down	12.7	2#leg down	13.3	3#leg down	13.7	4#leg down

NOTE:

1、The PLC module uses 0.5 mm^2 wire, and the rest of the electrical components uses 1.0 mm^2 wire.

2、The equipment in dotted box don't belong to Central Control Station.

设计	
校对	
审核	
工艺	
标准	
批准	

标记	数量	修改单号	签字	日期
设计				
校核				
审核				
标检				
审定				
批准				

1320T Electric Rack and Pinion Jacking System

Central Control Station Circuit Dwg.

所属装配图号	0422PTS28A-1-03-11100
图号	0422PTS28A-1-03-11101
标记	S
版本	
重量	
比例	1:1
共 8 页	第 3 页

武汉船用机械有限责任公司

0422PTS28A-1-03-11101

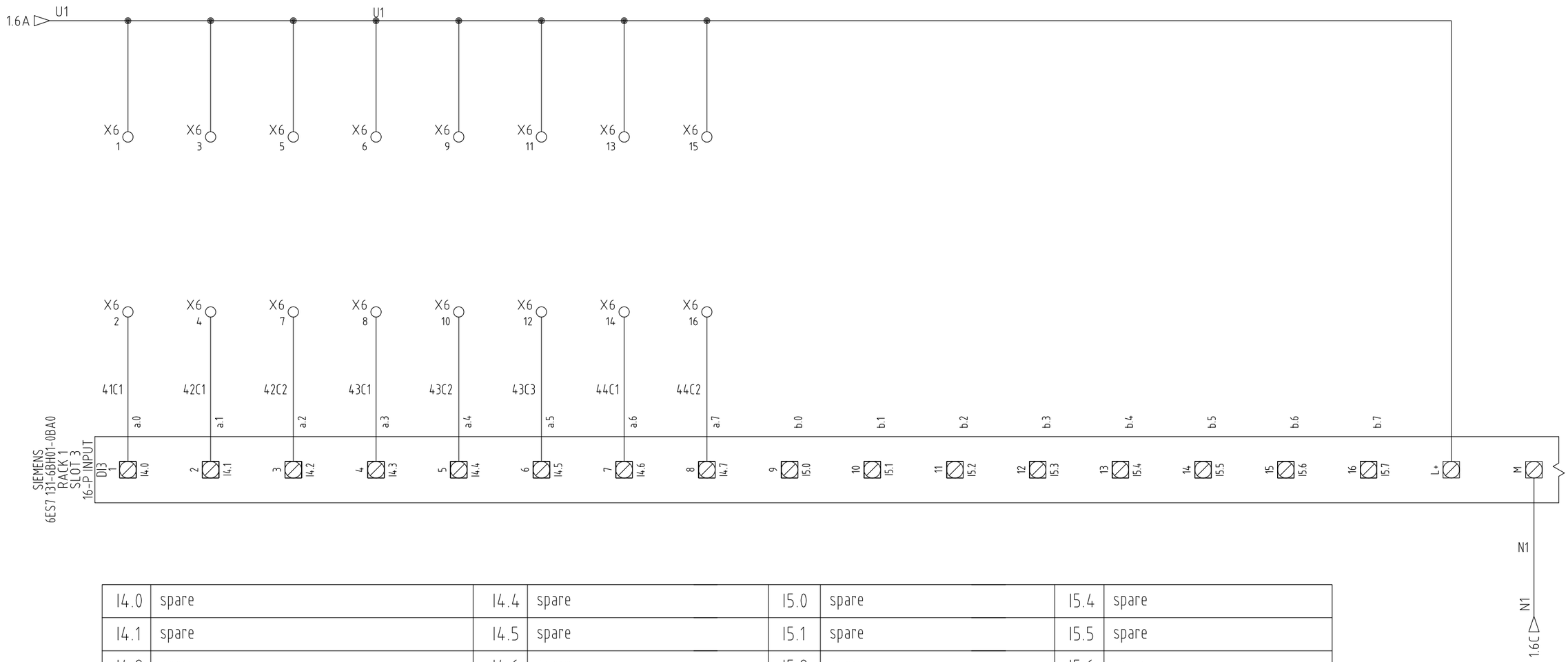

I4.0	spare	I4.4	spare	I5.0	spare	I5.4	spare
I4.1	spare	I4.5	spare	I5.1	spare	I5.5	spare
I4.2	spare	I4.6	spare	I5.2	spare	I5.6	spare
I4.3	spare	I4.7	spare	I5.3	spare	I5.7	spare

NOTE:

1、The PLC module uses 0.5 mm^2 wire, and the rest of the electrical components uses 1.0 mm^2 wire.

2、The equipment in dotted box don't belong to Central Control Station.

设计	
校对	
审核	
工艺	
标准	
批准	

标记	数量	修改单号	签字	日期
设计				
校核				
审核				
标检				
审定				
批准				

1320T Electric Rack and Pinion Jacking System

Central Control Station Circuit Dwg.

所属装配图号	0422PTS28A-1-03-11100
图号	0422PTS28A-1-03-11101
标记 S	版本
重量	比例 1:1
共 8 页	第 4 页

武汉船用机械有限责任公司

0422PTS28A-1-03-11101

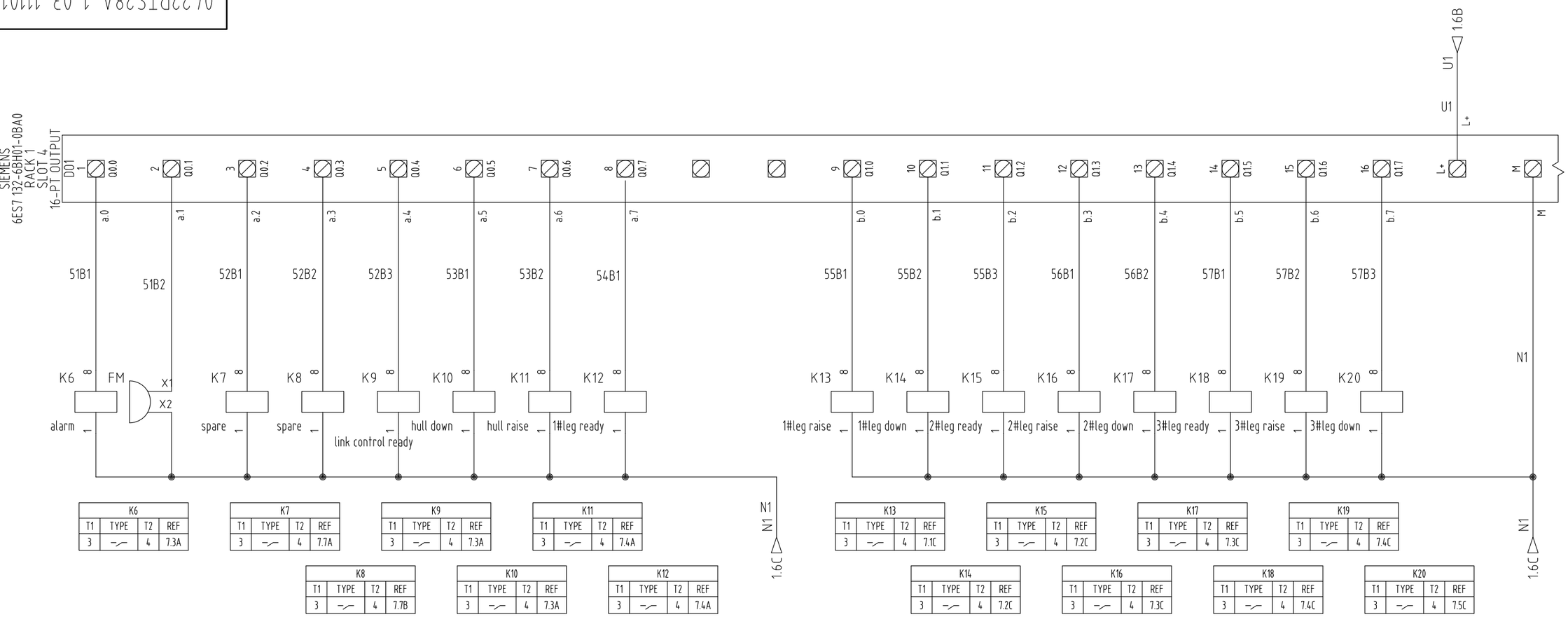

K6			
T1	TYPE	T2	REF
3		4	7.3A

K7			
T1	TYPE	T2	REF
3		4	7.7A

K9			
T1	TYPE	T2	REF
3		4	7.3A

K11			
T1	TYPE	T2	REF
3		4	7.4A

K13			
T1	TYPE	T2	REF
3		4	7.1C

K15			
T1	TYPE	T2	REF
3		4	7.2C

K17			
T1	TYPE	T2	REF
3		4	7.3C

K19			
T1	TYPE	T2	REF
3		4	7.4C

K8			
T1	TYPE	T2	REF
3		4	7.7B

K10			
T1	TYPE	T2	REF
3		4	7.3A

K12			
T1	TYPE	T2	REF
3		4	7.4A

K14			
T1	TYPE	T2	REF
3		4	7.2C

K16			
T1	TYPE	T2	REF
3		4	7.3C

K18			
T1	TYPE	T2	REF
3		4	7.4C

K20			
T1	TYPE	T2	REF
3		4	7.5C

Q0.0	alarm lamp	Q0.4	link control ready
Q0.1	buzzer	Q0.5	hull down
Q0.2	spare	Q0.6	hull raise
Q0.3	spare	Q0.7	1#leg ready

Q1.0	1#leg raise	Q1.4	2#leg down
Q1.1	1#leg down	Q1.5	3#leg ready
Q1.2	2#leg ready	Q1.6	3#leg raise
Q1.3	2#leg raise	Q1.7	3#leg down

NOTE:

1、The PLC module uses 0.5 mm^2 wire, and the rest of the electrical components uses 1.0 mm^2 wire.

2、The equipment in dotted box don't belong to Central Control Station.

设计	
校对	
审核	
工艺	
标准	
批准	

标记	数量	修改单号	签字	日期
设计				
校核				
审核				
标检				
审定				
批准				

1320T Electric Rack and Pinion Jacking System

Central Control Station Circuit Dwg.

所属装配图号	0422PTS28A-1-03-11100
图号	0422PTS28A-1-03-11101
标记 S	版本
重量	比例 1:1
共 8 页	第 5 页

武汉船用机械有限责任公司

0422PTS28A-1-03-11101

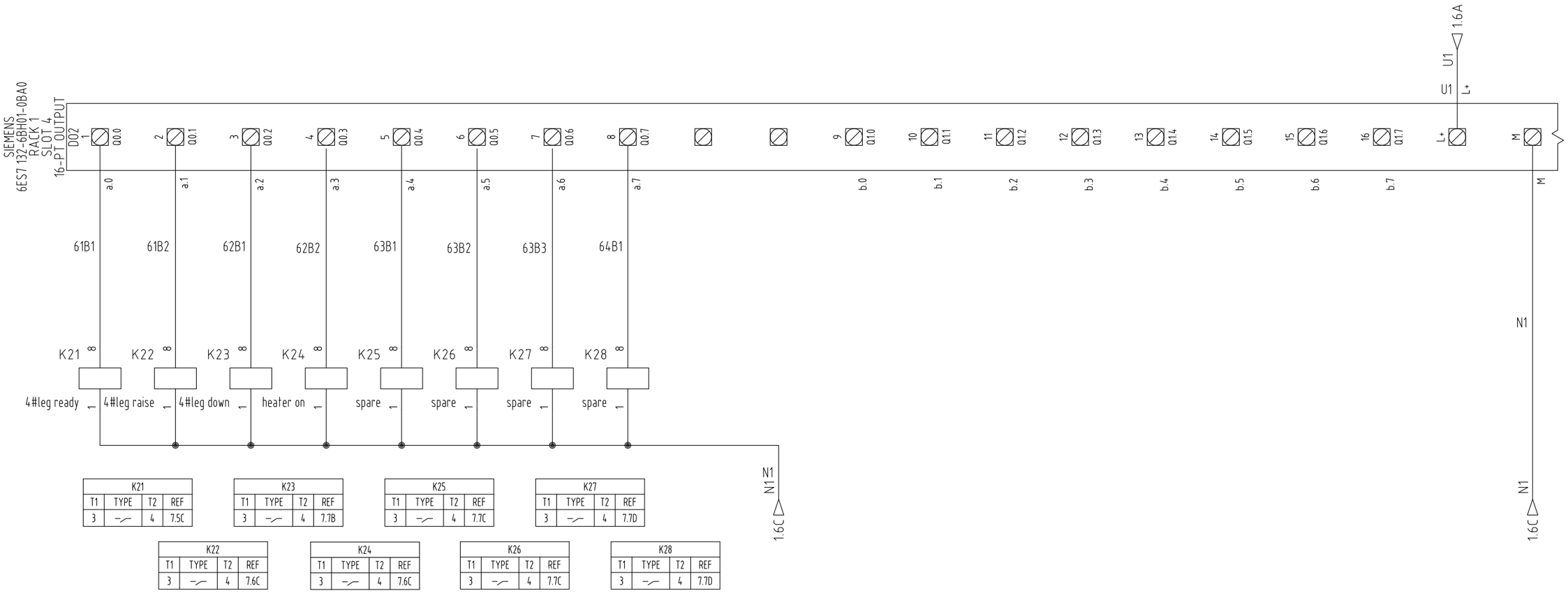

K21			
T1	TYPE	T2	REF
3	—/—	4	7.5C

K23			
T1	TYPE	T2	REF
3	—/—	4	7.7B

K25			
T1	TYPE	T2	REF
3	—/—	4	7.7C

K27			
T1	TYPE	T2	REF
3	—/—	4	7.7D

K22			
T1	TYPE	T2	REF
3	—/—	4	7.6C

K24			
T1	TYPE	T2	REF
3	—/—	4	7.6C

K26			
T1	TYPE	T2	REF
3	—/—	4	7.7C

K28			
T1	TYPE	T2	REF
3	—/—	4	7.7D

Q2.0	4#leg ready	Q2.4	spare
Q2.1	4#leg raise	Q2.5	spare
Q2.2	4#leg down	Q2.6	spare
Q2.3	spare	Q2.7	spare

Q3.0	spare	Q3.4	spare
Q3.1	spare	Q3.5	spare
Q3.2	spare	Q3.6	spare
Q3.3	spare	Q3.7	spare

NOTE:

1、The PLC module uses 0.5 mm^2 wire, and the rest of the electrical components uses 1.0 mm^2 wire.

2、The equipment in dotted box don't belong to Central Control Station.

设计	
校对	
审核	
工艺	
标准	
批准	

标记	数量	修改单号	签字	日期
设计				
校核				
审核				
标检				
审定				
批准				

1320T Electric Rack and Pinion Jacking System

Central Control Station Circuit Dwg.

所属装配图号	0422PTS28A-1-03-11100
图号	0422PTS28A-1-03-11101
标记 S	版本
重量	比例 1:1
共 9 页	第 6 页

武汉船用机械有限责任公司

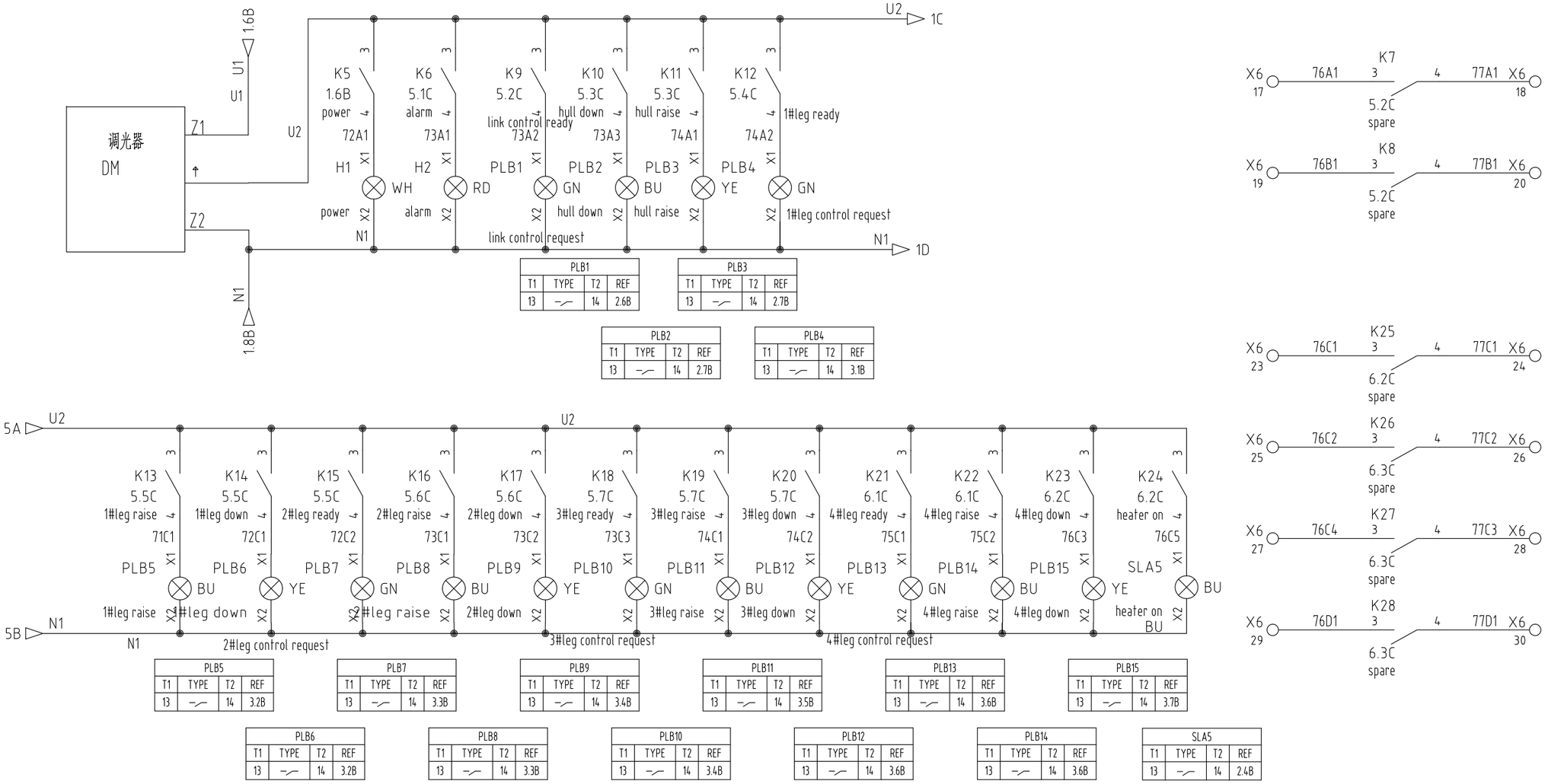

PLB1			
T1	TYPE	T2	REF
13		14	2.6B

PLB3			
T1	TYPE	T2	REF
13		14	2.7B

PLB2			
T1	TYPE	T2	REF
13		14	2.7B

PLB4			
T1	TYPE	T2	REF
13		14	3.1B

PLB5			
T1	TYPE	T2	REF
13		14	3.2B

PLB7			
T1	TYPE	T2	REF
13		14	3.3B

PLB9			
T1	TYPE	T2	REF
13		14	3.4B

PLB11			
T1	TYPE	T2	REF
13		14	3.5B

PLB13			
T1	TYPE	T2	REF
13		14	3.6B

PLB15			
T1	TYPE	T2	REF
13		14	3.7B

PLB6			
T1	TYPE	T2	REF
13		14	3.2B

PLB8			
T1	TYPE	T2	REF
13		14	3.3B

PLB10			
T1	TYPE	T2	REF
13		14	3.4B

PLB12			
T1	TYPE	T2	REF
13		14	3.6B

PLB14			
T1	TYPE	T2	REF
13		14	3.6B

SLA5			
T1	TYPE	T2	REF
13		14	2.4B

NOTE:

1、The PLC module uses 0.5 mm^2 wire, and the rest of the electrical components uses 1.0 mm^2 wire.

2、The equipment in dotted box don't belong to Central Control Station.

设计	
校对	
审核	
工艺	
标准	
批准	

标记	数量	修改单号	签字	日期
设计				
校核				
审核				
标检				
审定				
批准				

1320T Electric Rack and Pinion Jacking System

Central Control Station Circuit Dwg.

所属装配图号	0422PTS28A-1-03-11100
图号	0422PTS28A-1-03-11101
标记	S
版本	
重量	
比例	1:1
共 8 页	第 7 页

武汉船用机械有限责任公司

0422PTS28A-1-03-11101

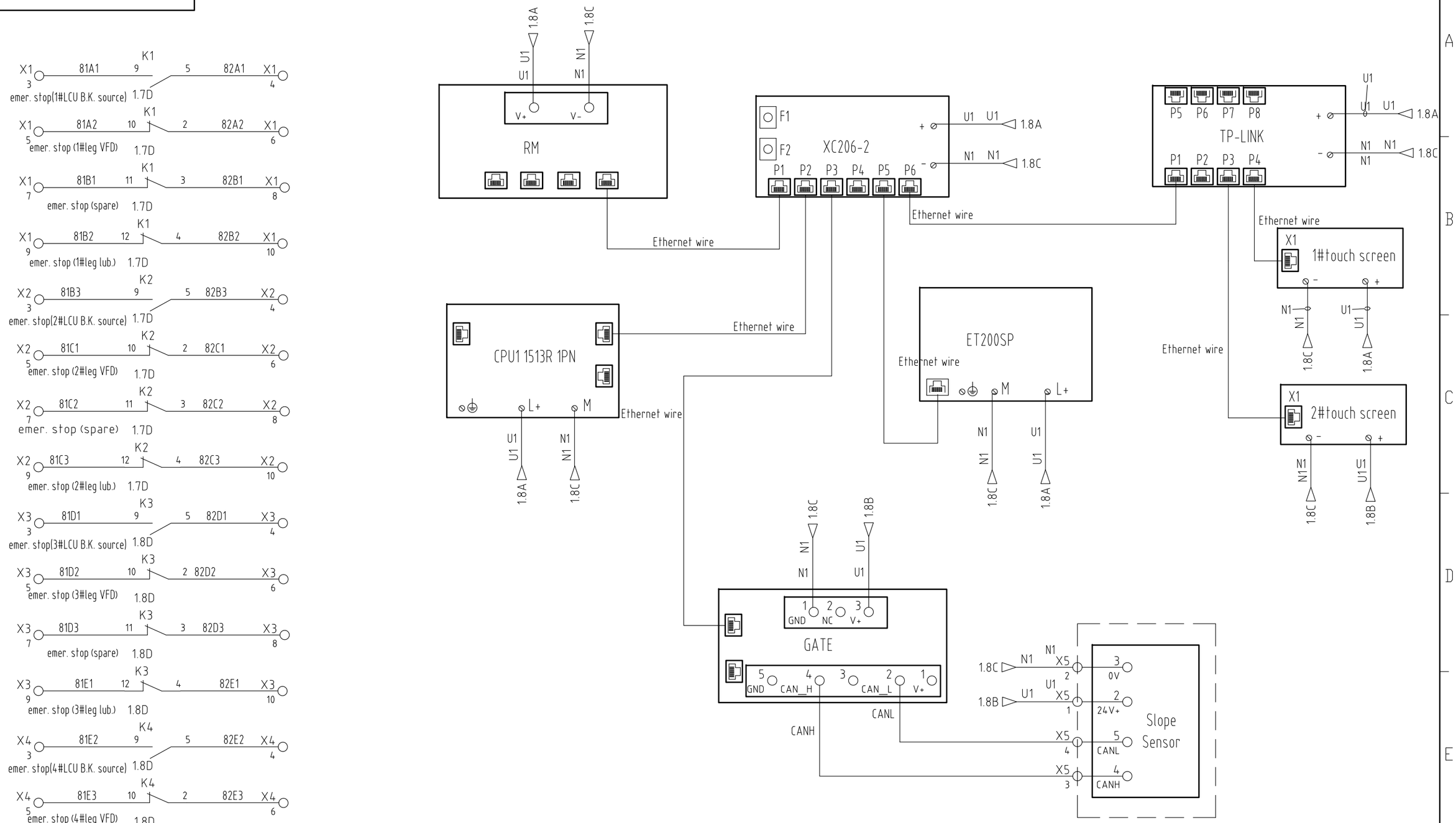

NOTE:

1、The PLC module uses 0.5 mm^2 wire, and the rest of the electrical components uses 1.0 mm^2 wire.

2、The equipment in dotted box don't belong to Central Control Station.

标记	数量	修改单号	签字	日期
设计				
校核				
审核				
标检				
审定				
批准				

1320T Electric Rack and Pinion Jacking System		所属装配图号	0422PTS28A-1-03-11100
Central Control Station Circuit Dwg.		图号	0422PTS28A-1-03-11101
		标记 S / 版本 / 重量 / 比例	1:1
		共 8 页	第 8 页
		武汉船用机械有限责任公司	

设计	
校对	
审核	
工艺	
标准	
批准	

0422PTS28A-03-11200

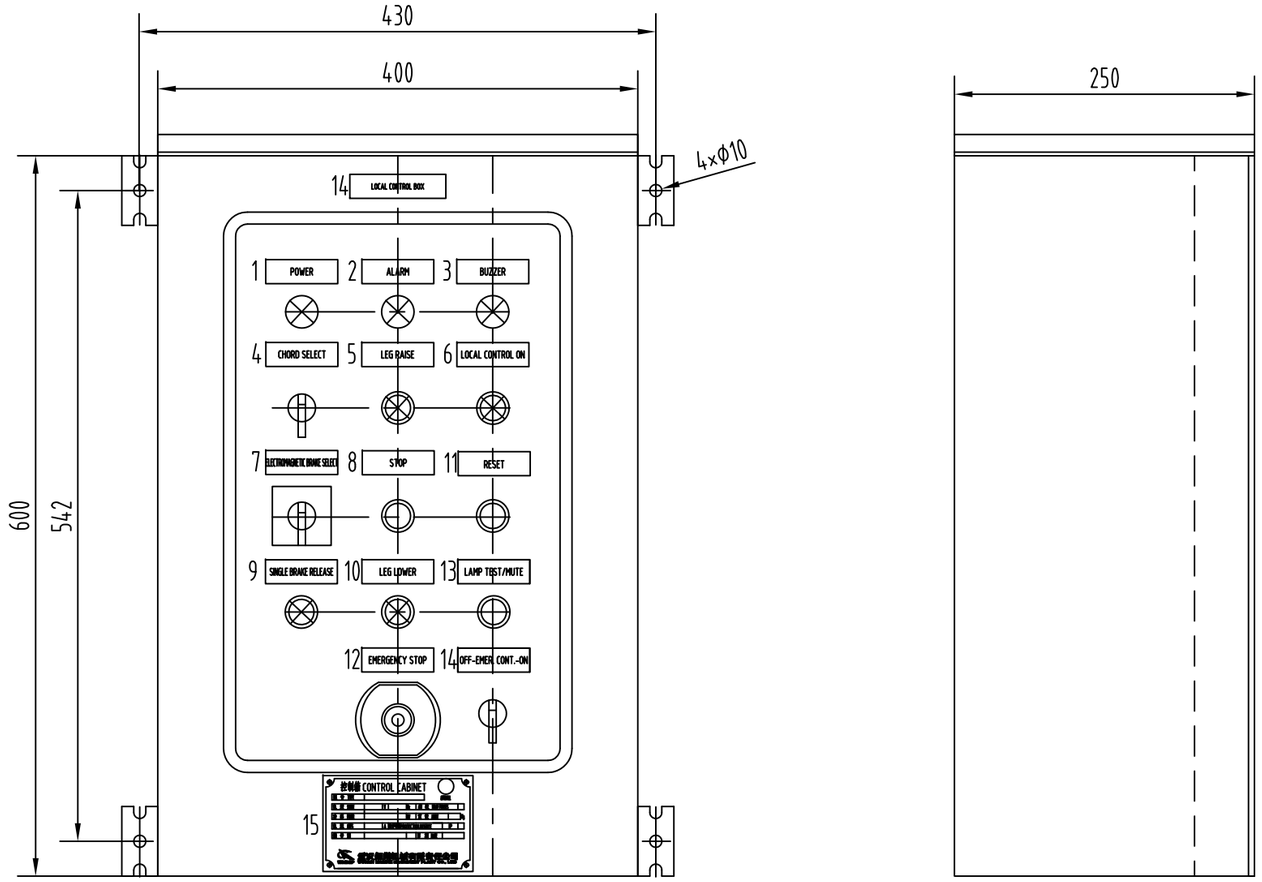

NO.1-NO.13

序号	铭牌内容一
1	POWER
2	ALARM
3	BUZZER
4	CHORD SELECT
5	LEG RAISE/HULL LOWER
6	LOCAL CONTROL ON/OFF
7	ELECTROMAGNETIC BRAKE SELECT
8	STOP
9	SINGLE BRAKE RELEASE
10	LEG LOWER/HULL RAISE
11	RESET
12	EMERGENCY STOP
13	LAMP TEST/MUTE
14	OFF-EMERGENCY CONTROL-ON

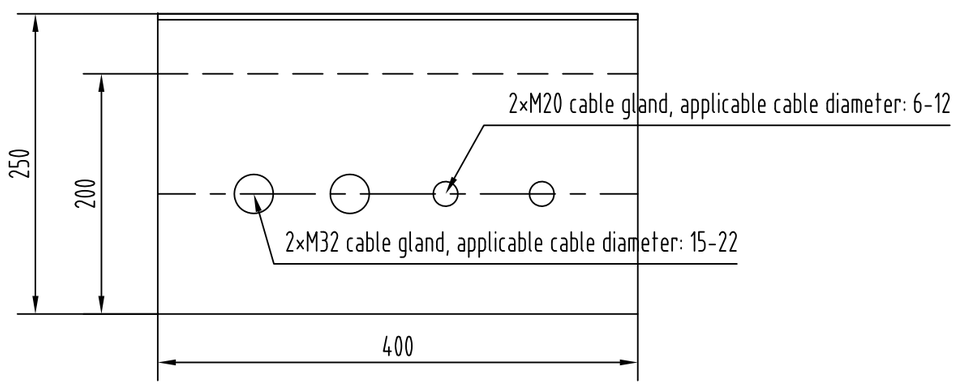

Material：stainless steel
Protection degree：IP56
Weight：25KG
Cable enter method：From the gland

设计	
校对	
审核	
工艺	
标准	
批准	

标记	数量	修改单号	签字	日期
设计				
校核				
审核				
标检				
审定				
批准				

1320T Electric Rack and Pinion Jacking System

Local Control Box

assembly

所属装配图号	0422PTS28A-03-00
图号	0422PTS28A-03-11200
标记	S
版本	
重量	
比例	1:5
共 1 页	第 1 页

WXMJP 武汉船用机械有限责任公司

0422PTS27A-1-03-11201

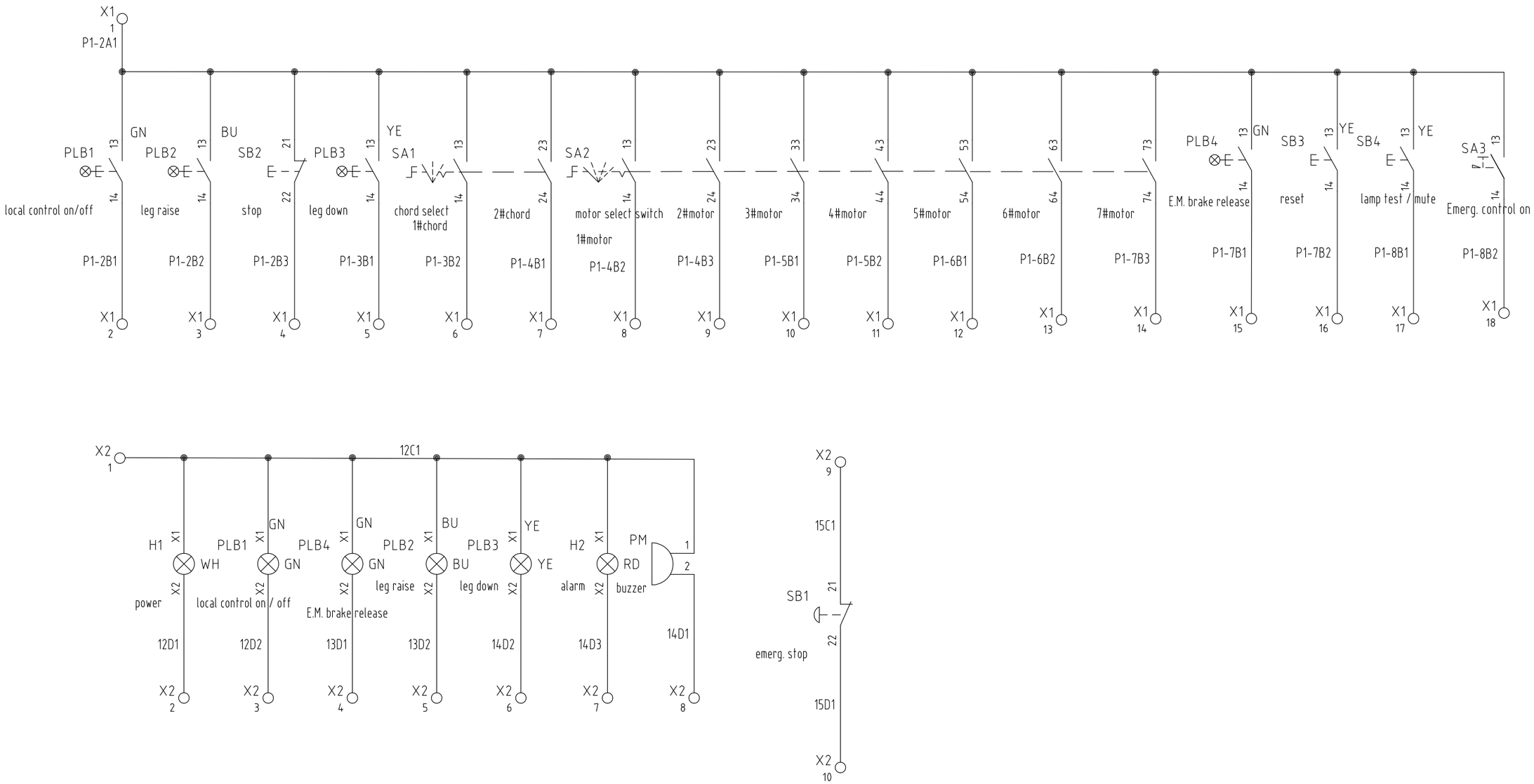

NOTE:

1、The electrical components uses 1.0 mm^2 wire.

设计	
校对	
审核	
工艺	
标准	
批准	

标记	数量	修改单号	签字	日期
设计				
校核				
审核				
标检				
审定				
批准				

1320T Electric Rack and Pinion Jacking System

Leg Control Box Circuit Dwg.

所属装配图号	0422PTS28A-1-03-11200
图号	0422PTS28A-1-03-11201
标记 S	版本
重量	
比例	1:1
共 1 页	第 1 页

WUXIP 武汉船用机械有限责任公司

0422PTS28A-1-03-12100

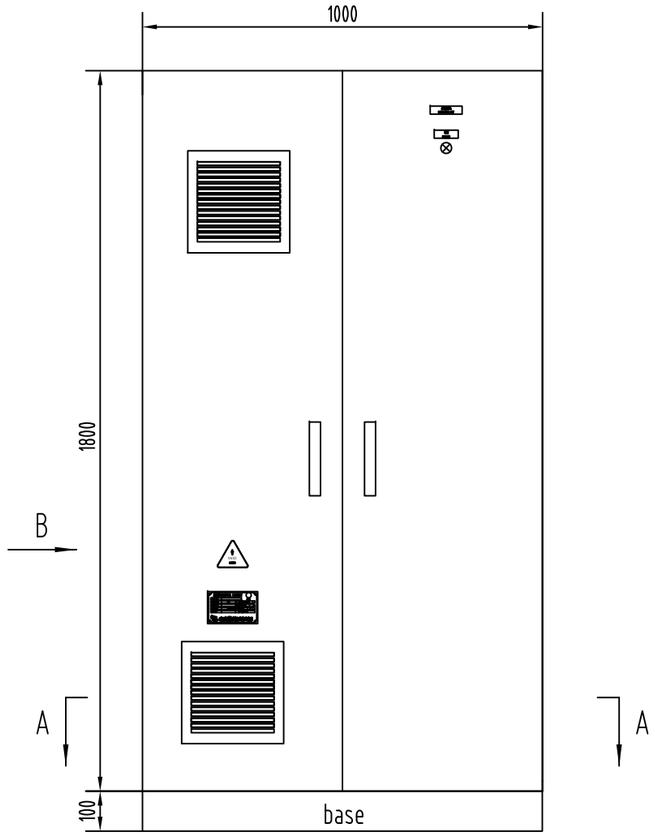

main view

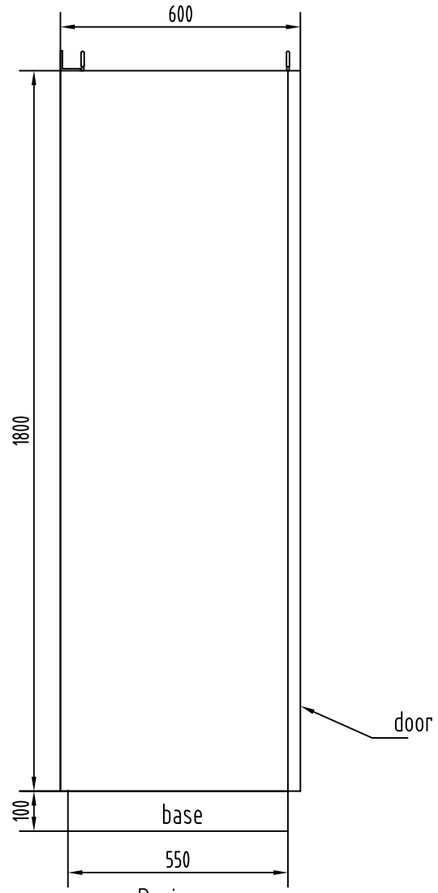

B view

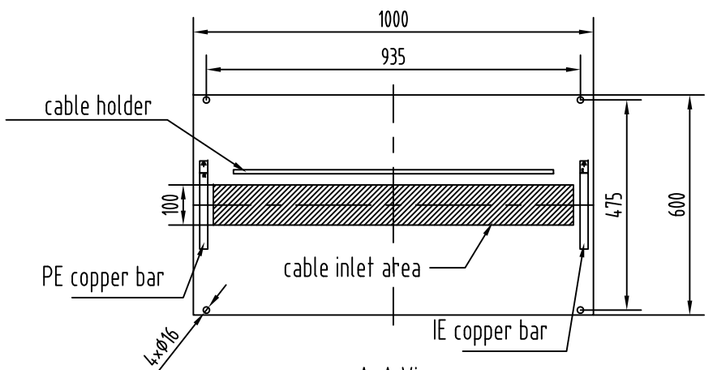

A-A View

Material: Q235
Protection degree: IP44
Color: RAL7035
Weight: 300kg
Cable enter method: From the bottom

设计	
校对	
审核	
工艺	
标准	
批准	

标记	数量	修改单号	签字	日期
设计				
校核				
审核				
标检				
审定				
批准				

1320T Electric Rack and Pinion Jacking System

Leg Control Unit

assembly

所属装配图号	0422PTS28A-1-03-00
图号	0422PTS28A-1-03-12100
标记	S
版本	
重量	
比例	1:15
共 1 页	第 1 页

WMMP 武汉船用机械有限责任公司

0422PTS28A-1-03-12101

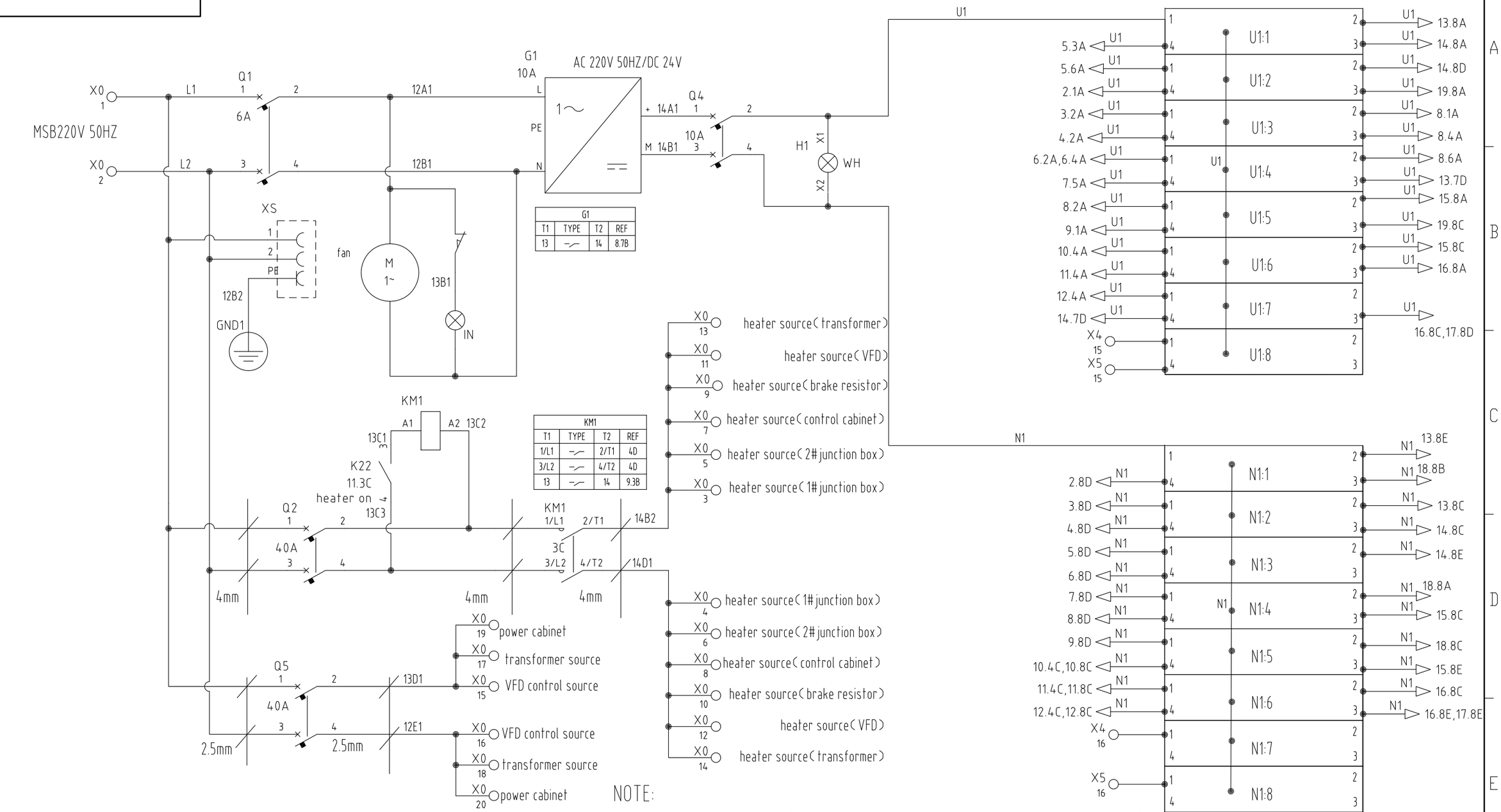

G1			
T1	TYPE	T2	REF
13		14	8.7B

KM1			
T1	TYPE	T2	REF
1/L1		2/T1	4D
3/L2		4/T2	4D
13		14	9.3B

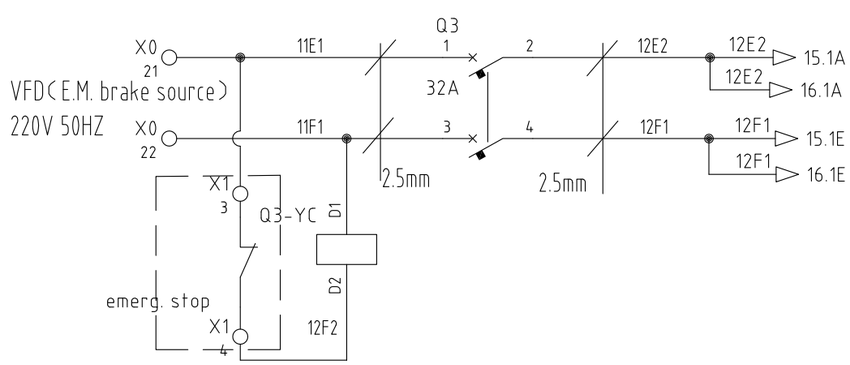

NOTE:

1、The PLC module uses 0.5 mm^2 wire, and the rest of the electrical components uses 1.0 mm^2 wire.

2、The equipment in dotted box don't belong to Central Control Station.

标记	数量	修改单号	签字	日期
设计				
校核				
审核				
标检				
审定				
批准				

1320T Electric Rack and Pinion Jacking System	所属装配图号	0422PTS28A-1-03-12100	
Leg Control Unit Circuit Dwg.	图号	0422PTS28A-1-03-12101	
	标记	版本	重量	比例
	S			1:1
	共 18 页	第 1 页	
	武汉船用机械有限责任公司		

设计	
校对	
审核	
工艺	
标准	
批准	

0422PTS27A-1-03-12101

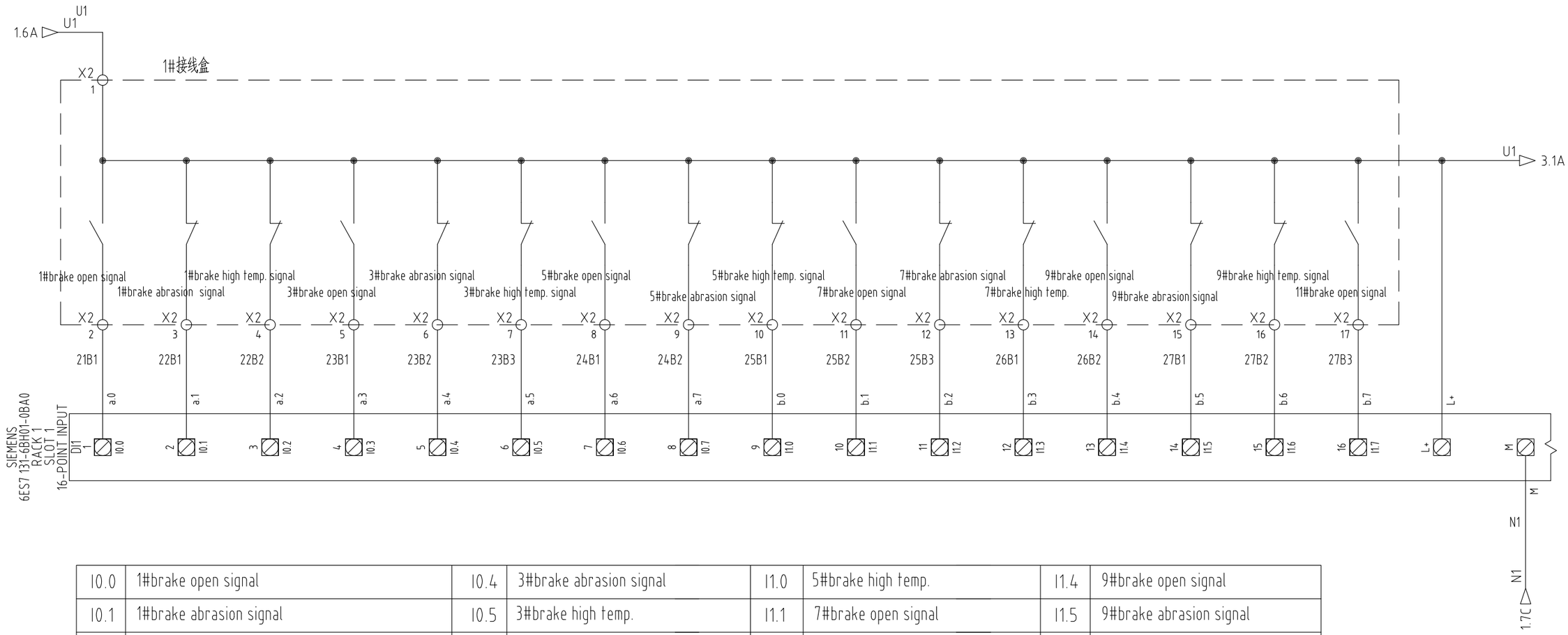

10.0	1#brake open signal	10.4	3#brake abrasion signal	11.0	5#brake high temp.	11.4	9#brake open signal
10.1	1#brake abrasion signal	10.5	3#brake high temp.	11.1	7#brake open signal	11.5	9#brake abrasion signal
10.2	1#brake high temp.	10.6	5#brake open signal	11.2	7#brake abrasion signal	11.6	9#brake high temp.
10.3	3#brake open signal	10.7	5#brake abrasion signal	11.3	7#brake high temp.	11.7	11#brake open signal

NOTE:

1、The PLC module uses 0.5 mm^2 wire, and the rest of the electrical components uses 1.0 mm^2 wire.

2、The equipment in dotted box don't belong to Central Control Station.

设计	
校对	
审核	
工艺	
标准	
批准	

标记	数量	修改单号	签字	日期
设计				
校核				
审核				
标检				
审定				
批准				

1320T Electric Rack and Pinion Jacking System

Leg Control Unit Circuit Dwg.

所属装配图号	0422PTS28A-1-03-12100
图号	0422PTS28A-1-03-12101
标记 S	版本
重量	比例 1:1
共 18 页	第 2 页

WMMP 武汉船用机械有限责任公司

0422PTS27A-1-03-12101

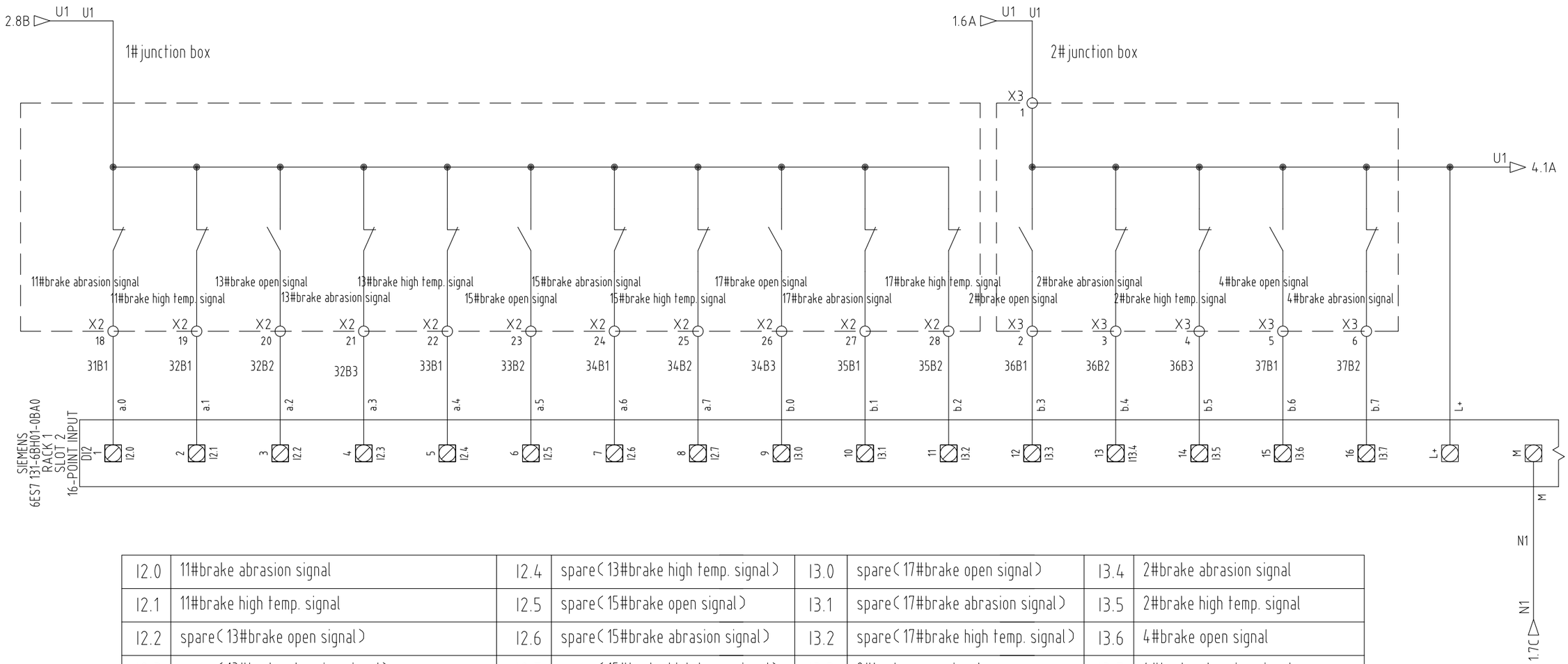

12.0	11#brake abrasion signal	12.4	spare（13#brake high temp. signal）	13.0	spare（17#brake open signal）	13.4	2#brake abrasion signal
12.1	11#brake high temp. signal	12.5	spare（15#brake open signal）	13.1	spare（17#brake abrasion signal）	13.5	2#brake high temp. signal
12.2	spare（13#brake open signal）	12.6	spare（15#brake abrasion signal）	13.2	spare（17#brake high temp. signal）	13.6	4#brake open signal
12.3	spare（13#brake abrasion signal）	12.7	spare（15#brake high temp. signal）	13.3	2#brake open signal	13.7	4#brake abrasion signal

NOTE:

1、The PLC module uses 0.5 mm^2 wire, and the rest of the electrical components uses 1.0 mm^2 wire.

2、The equipment in dotted box don't belong to Central Control Station.

设计	
校对	
审核	
工艺	
标准	
批准	

标记	数量	修改单号	签字	日期
设计				
校核				
审核				
标检				
审定				
批准				

1320T Electric Rack and Pinion Jacking System

Leg Control Unit Circuit Dwg.

所属装配图号	0422PTS28A-1-03-12100
图号	0422PTS28A-1-03-12101
标记 S	版本
重量	比例 1:1
共 18 页	第 3 页

武汉船用机械有限责任公司

0422PTS27A-1-03-12101

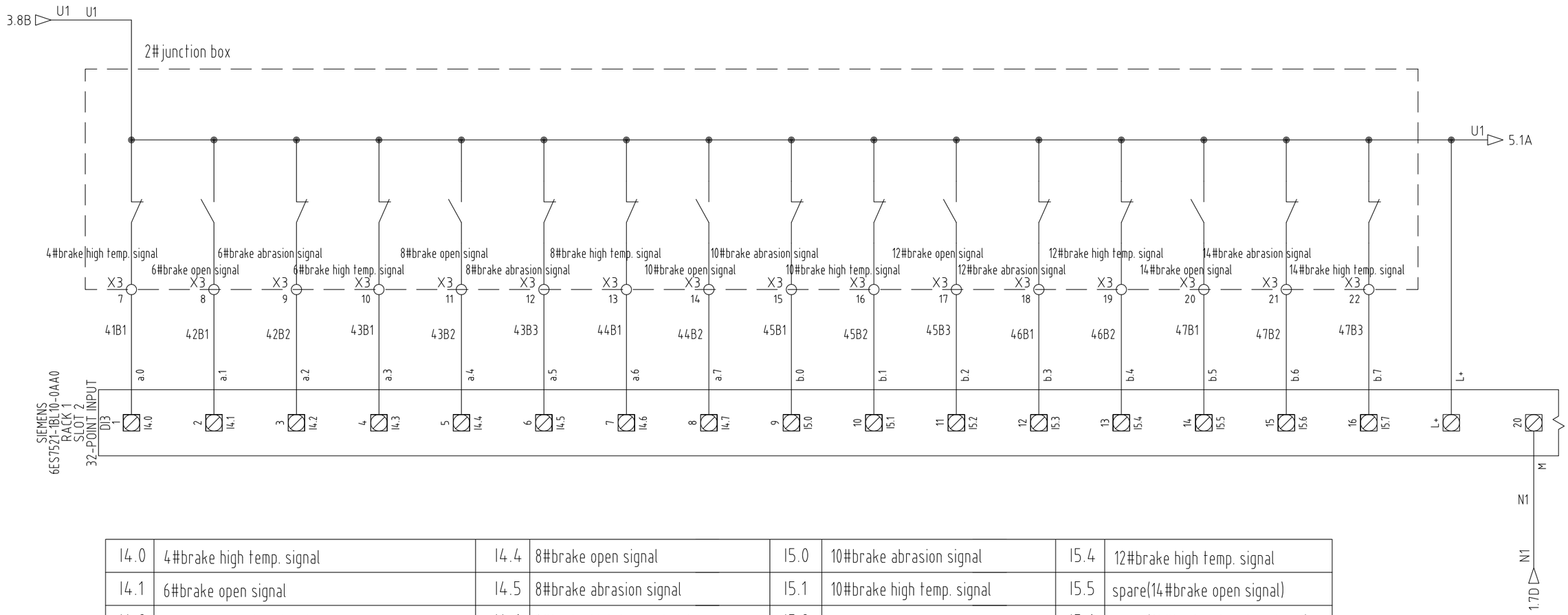

I4.0	4#brake high temp. signal	I4.4	8#brake open signal	I5.0	10#brake abrasion signal	I5.4	12#brake high temp. signal
I4.1	6#brake open signal	I4.5	8#brake abrasion signal	I5.1	10#brake high temp. signal	I5.5	spare(14#brake open signal)
I4.2	6#brake abrasion signal	I4.6	8#brake high temp. signal	I5.2	12#brake open signal	I5.6	spare(14#brake abrasion signal)
I4.3	6#brake high temp. signal	I4.7	10#brake open signal	I5.3	12#brake abrasion signal	I5.7	spare(14#brake high temp. signal)

NOTE:

1、The PLC module uses 0.5 mm^2 wire, and the rest of the electrical components uses 1.0 mm^2 wire.

2、The equipment in dotted box don't belong to Central Control Station.

设计	
校对	
审核	
工艺	
标准	
批准	

标记	数量	修改单号	签字	日期
设计				
校核				
审核				
标检				
审定				
批准				

1320T Electric Rack and Pinion Jacking System

Leg Control Unit Circuit Dwg.

所属装配图号	0422PTS28A-1-03-12100
图号	0422PTS28A-1-03-12101
标记 S	版本
重量	比例 1:1
共 18 页	第 4 页

武汉船用机械有限责任公司

0422PTS27A-1-03-12101

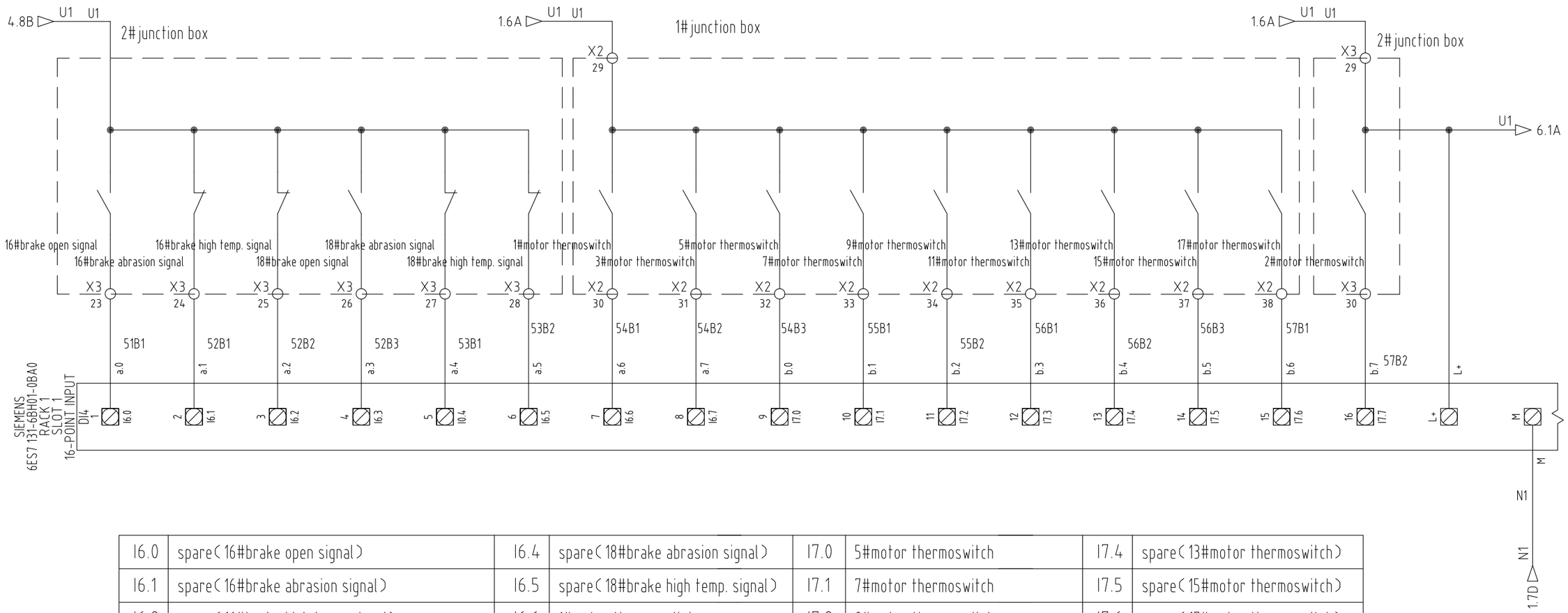

16.0	spare(16#brake open signal)	16.4	spare(18#brake abrasion signal)	17.0	5#motor thermoswitch	17.4	spare(13#motor thermoswitch)
16.1	spare(16#brake abrasion signal)	16.5	spare(18#brake high temp. signal)	17.1	7#motor thermoswitch	17.5	spare(15#motor thermoswitch)
16.2	spare(16#brake high temp. signal)	16.6	1#motor thermoswitch	17.2	9#motor thermoswitch	17.6	spare(17#motor thermoswitch)
16.3	spare(18#brake open signal)	16.7	3#motor thermoswitch	17.3	11#motor thermoswitch	17.7	2#motor thermoswitch

NOTE:

1、The PLC module uses 0.5 mm^2 wire, and the rest of the electrical components uses 1.0 mm^2 wire.

2、The equipment in dotted box don't belong to Central Control Station.

设计	
校对	
审核	
工艺	
标准	
批准	

标记	数量	修改单号	签字	日期
设计				
校核				
审核				
标检				
审定				
批准				

1320T Electric Rack and Pinion Jacking System

Leg Control Unit Circuit Dwg.

所属装配图号	0422PTS28A-1-03-12100
图号	0422PTS28A-1-03-12101
标记 S	版本
重量	比例 1:1
共 18 页	第 5 页

WMMP 武汉船用机械有限责任公司

0422PTS27A-1-03-12101

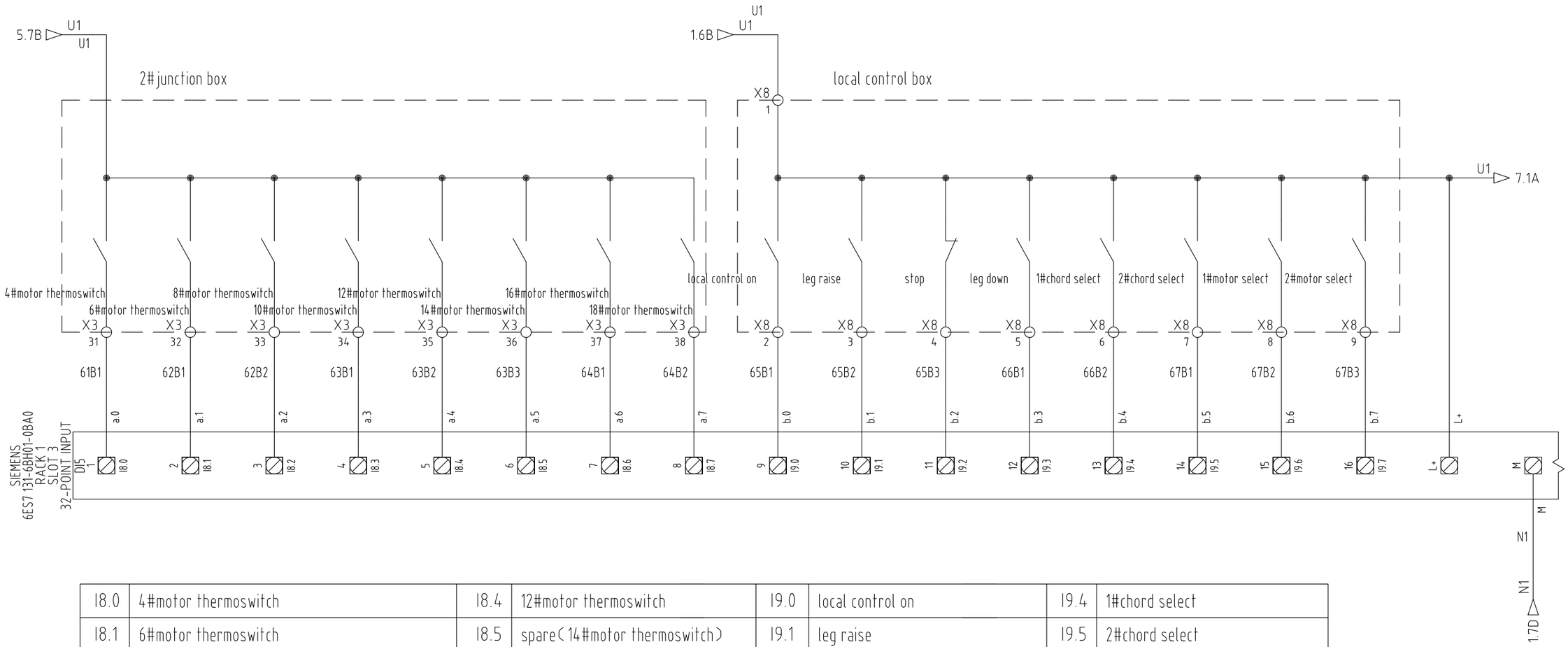

18.0	4#motor thermoswitch	18.4	12#motor thermoswitch	19.0	local control on	19.4	1#chord select
18.1	6#motor thermoswitch	18.5	spare(14#motor thermoswitch)	19.1	leg raise	19.5	2#chord select
18.2	8#motor thermoswitch	18.6	spare(16#motor thermoswitch)	19.2	stop	19.6	spare(3#chord select)
18.3	10#motor thermoswitch	18.7	spare(18#motor thermoswitch)	19.3	leg down	19.7	1#motor select

NOTE:

1、The PLC module uses 0.5 mm^2 wire, and the rest of the electrical components uses 1.0 mm^2 wire.

2、The equipment in dotted box don't belong to Central Control Station.

设计	
校对	
审核	
工艺	
标准	
批准	

标记	数量	修改单号	签字	日期
设计				
校核				
审核				
标检				
审定				
批准				

1320T Electric Rack and Pinion Jacking System

Leg Control Unit Circuit Dwg.

所属装配图号	0422PTS28A-1-03-12100
图号	0422PTS28A-1-03-12101
标记 S	版本
重量	比例 1:1
共 18 页	第 6 页

武汉船用机械有限责任公司

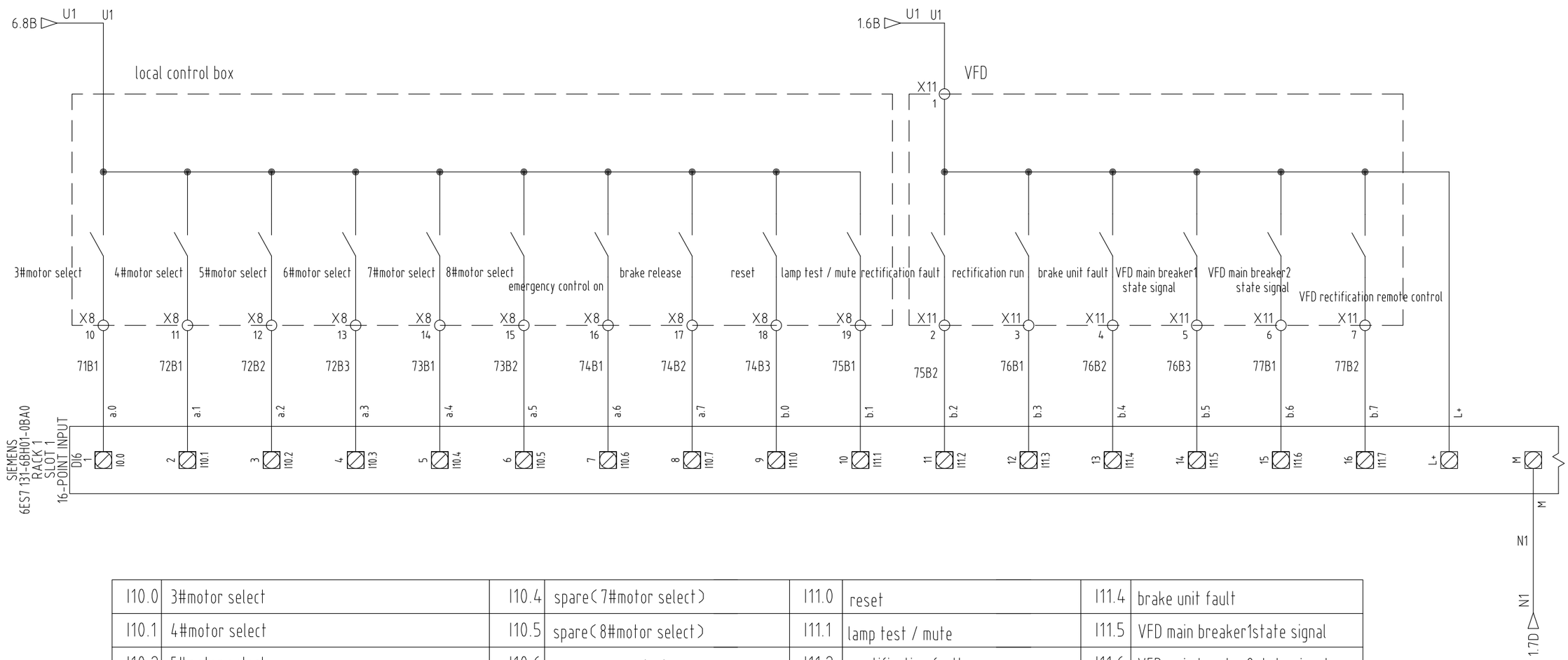

I10.0	3#motor select	I10.4	spare（7#motor select）	I11.0	reset	I11.4	brake unit fault
I10.1	4#motor select	I10.5	spare（8#motor select）	I11.1	lamp test / mute	I11.5	VFD main breaker1state signal
I10.2	5#motor select	I10.6	emergency control on	I11.2	rectification fault	I11.6	VFD main breaker2state signal
I10.3	6#motor select	I10.7	brake release	I11.3	rectification run	I11.7	VFD rectification remote control

NOTE:

1、The PLC module uses 0.5 mm^2 wire, and the rest of the electrical components uses 1.0 mm^2 wire.

2、The equipment in dotted box don't belong to Central Control Station.

设计	
校对	
审核	
工艺	
标准	
批准	

标记	数量	修改单号	签字	日期
设计				
校核				
审核				
标检				
审定				
批准				

1320T Electric Rack and Pinion Jacking System

Leg Control Unit Circuit Dwg.

所属装配图号	0422PTS28A-1-03-12100
图号	0422PTS28A-1-03-12101
标记 S	版本
重量	比例 1:1
共 18 页	第 7 页

武汉船用机械有限责任公司

0422PTS27A-1-03-12101

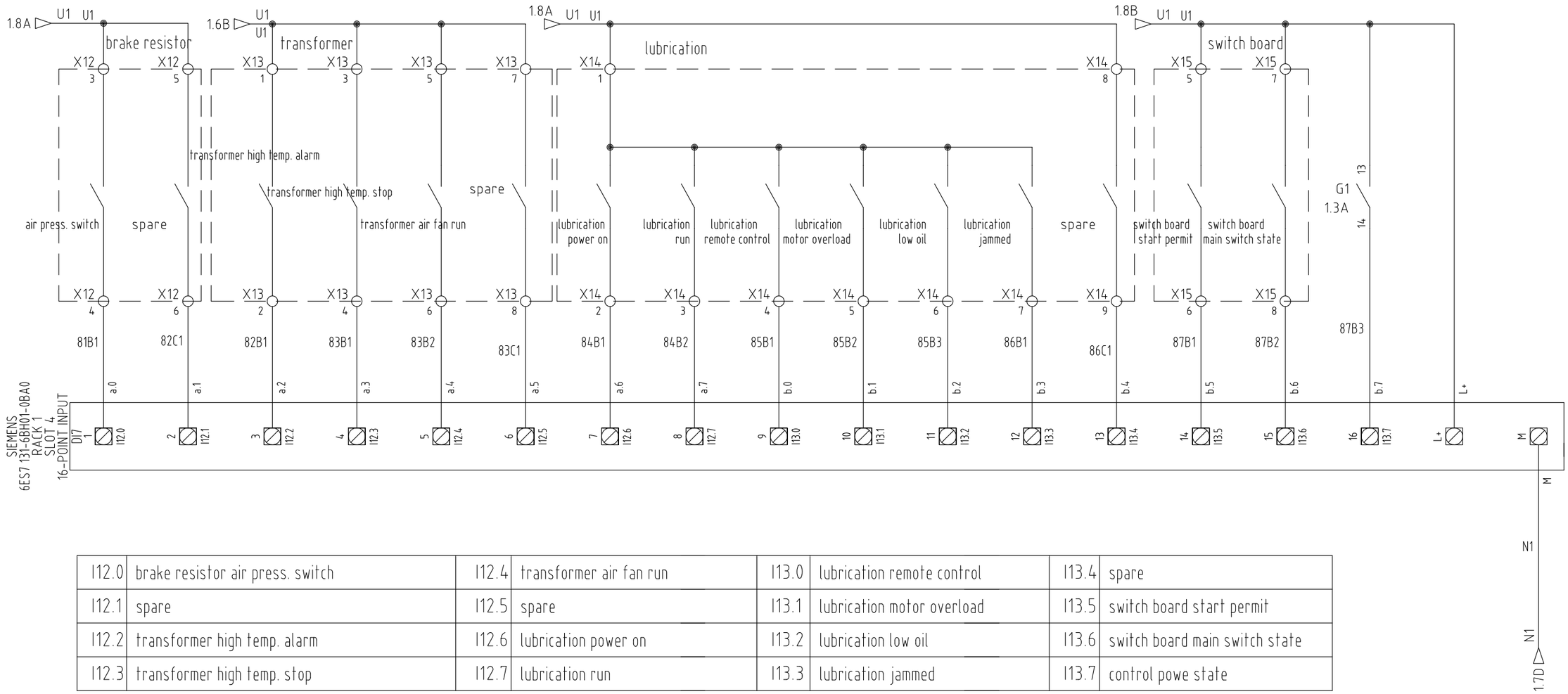

I12.0	brake resistor air press. switch	I12.4	transformer air fan run	I13.0	lubrication remote control	I13.4	spare
I12.1	spare	I12.5	spare	I13.1	lubrication motor overload	I13.5	switch board start permit
I12.2	transformer high temp. alarm	I12.6	lubrication power on	I13.2	lubrication low oil	I13.6	switch board main switch state
I12.3	transformer high temp. stop	I12.7	lubrication run	I13.3	lubrication jammed	I13.7	control powe state

NOTE:

1、The PLC module uses 0.5 mm^2 wire, and the rest of the electrical components uses 1.0 mm^2 wire.

2、The equipment in dotted box don't belong to Central Control Station.

设计	
校对	
审核	
工艺	
标准	
批准	

标记	数量	修改单号	签字	日期
设计				
校核				
审核				
标检				
审定				
批准				

1320T Electric Rack and Pinion Jacking System

Leg Control Unit Circuit Dwg.

所属装配图号	0422PTS28A-1-03-12100
图号	0422PTS28A-1-03-12101
标记 S	版本
重量	比例 1:1
共 18 页	第 8 页

武汉船用机械有限责任公司

0422PTS27A-1-03-12101

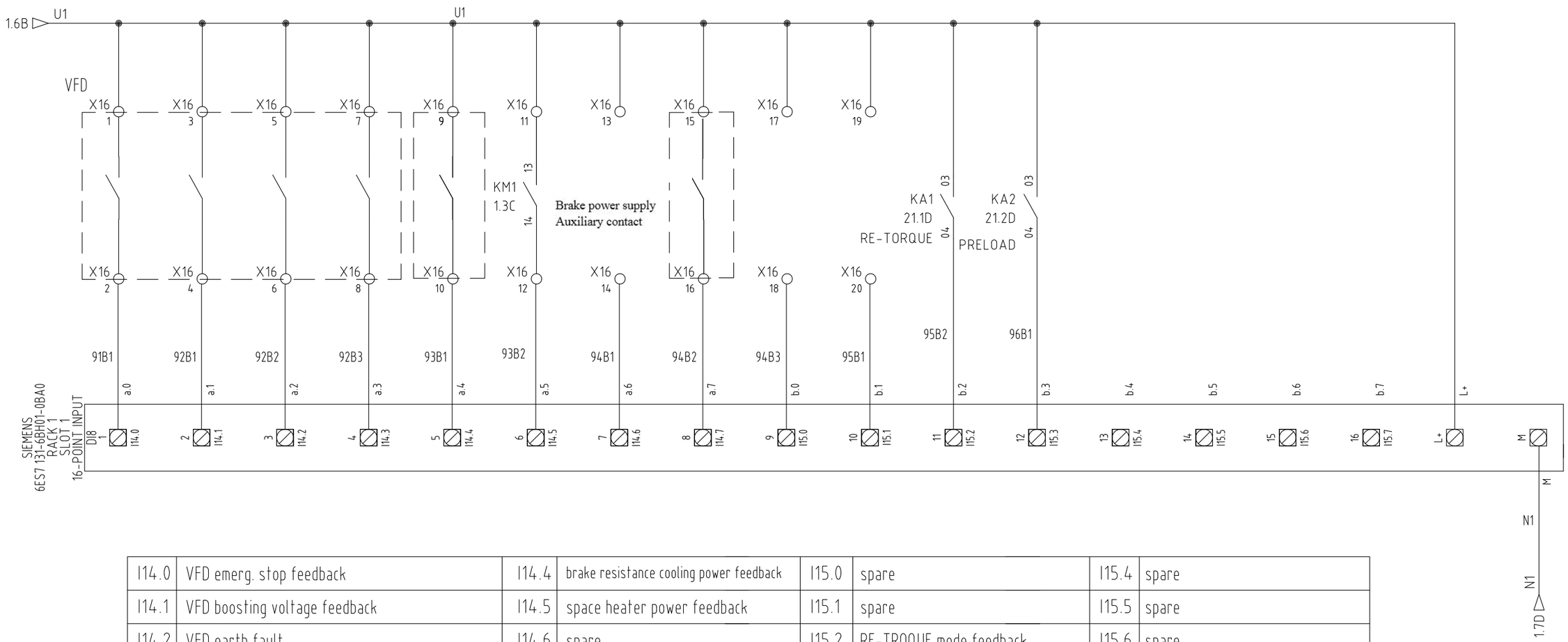

I14.0	VFD emerg. stop feedback	I14.4	brake resistance cooling power feedback	I15.0	spare	I15.4	spare
I14.1	VFD boosting voltage feedback	I14.5	space heater power feedback	I15.1	spare	I15.5	spare
I14.2	VFD earth fault	I14.6	spare	I15.2	RE-TROQUE mode feedback	I15.6	spare
I14.3	VFD heater feedback	I14.7	Brake power supply Auxiliary contact	I15.3	PRELOAD mode feedback	I15.7	spare

NOTE:

1、The PLC module uses 0.5 mm^2 wire, and the rest of the electrical components uses 1.0 mm^2 wire.

2、The equipment in dotted box don't belong to Central Control Station.

设计	
校对	
审核	
工艺	
标准	
批准	

标记	数量	修改单号	签字	日期
设计				
校核				
审核				
标检				
审定				
批准				

1320T Electric Rack and Pinion Jacking System

Leg Control Unit Circuit Dwg.

所属装配图号	0422PTS28A-1-03-12100
图号	0422PTS28A-1-03-12101
标记 S	版本
重量	比例 1:1
共 18 页	第 9 页

WMMP 武汉船用机械有限责任公司

0422PTS27A-1-03-12101

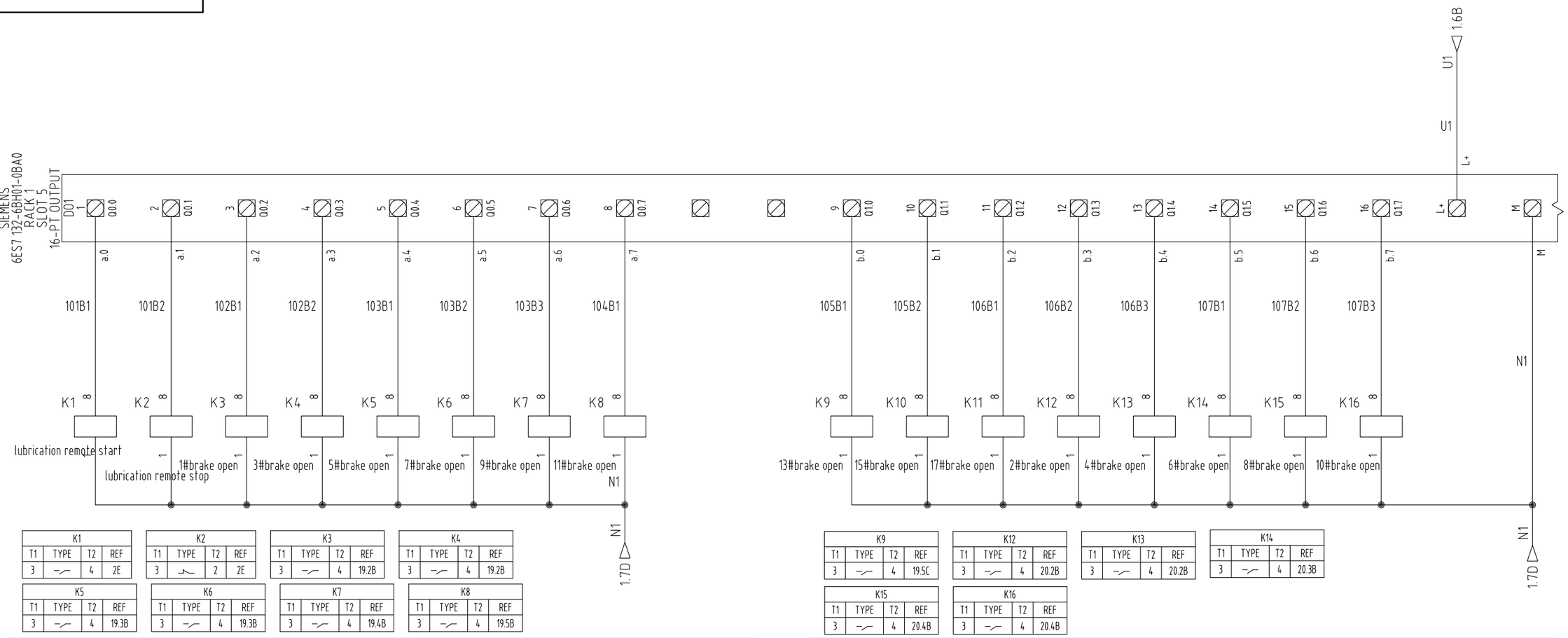

K1			
T1	TYPE	T2	REF
3	–/–	4	2E

K2			
T1	TYPE	T2	REF
3	–/–	2	2E

K3			
T1	TYPE	T2	REF
3	–/–	4	19.2B

K4			
T1	TYPE	T2	REF
3	–/–	4	19.2B

K5			
T1	TYPE	T2	REF
3	–/–	4	19.3B

K6			
T1	TYPE	T2	REF
3	–/–	4	19.3B

K7			
T1	TYPE	T2	REF
3	–/–	4	19.4B

K8			
T1	TYPE	T2	REF
3	–/–	4	19.5B

K9			
T1	TYPE	T2	REF
3	–/–	4	19.5C

K12			
T1	TYPE	T2	REF
3	–/–	4	20.2B

K13			
T1	TYPE	T2	REF
3	–/–	4	20.2B

K14			
T1	TYPE	T2	REF
3	–/–	4	20.3B

K15			
T1	TYPE	T2	REF
3	–/–	4	20.4B

K16			
T1	TYPE	T2	REF
3	–/–	4	20.4B

Q0.0	lubrication remote start	Q0.4	5#brake open
Q0.1	lubrication remote stop	Q0.5	7#brake open
Q0.2	1#brake open	Q0.6	9#brake open
Q0.3	3#brake open	Q0.7	11#brake open

Q1.0	spare(13#brake open)	Q1.4	4#brake open
Q1.1	spare(15#brake open)	Q1.5	6#brake open
Q1.2	spare(17#brake open)	Q1.6	8#brake open
Q1.3	2#brake open	Q1.7	10#brake open

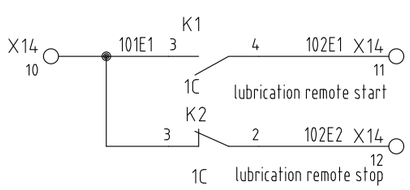

NOTE:

1、The PLC module uses 0.5 mm^2 wire, and the rest of the electrical components uses 1.0 mm^2 wire.

2、The equipment in dotted box don't belong to Central Control Station.

设计	
校对	
审核	
工艺	
标准	
批准	

标记	数量	修改单号	签字	日期
设计				
校核				
审核				
标检				
审定				
批准				

1320T Electric Rack and Pinion Jacking System

Leg Control Unit Circuit Dwg.

所属装配图号	0422PTS28A-1-03-12100
图号	0422PTS28A-1-03-12101
标记 S	版本
重量	比例 1:1
共 18 页	第 10 页

WMMP 武汉船用机械有限责任公司

0422PTS27A-1-03-12101

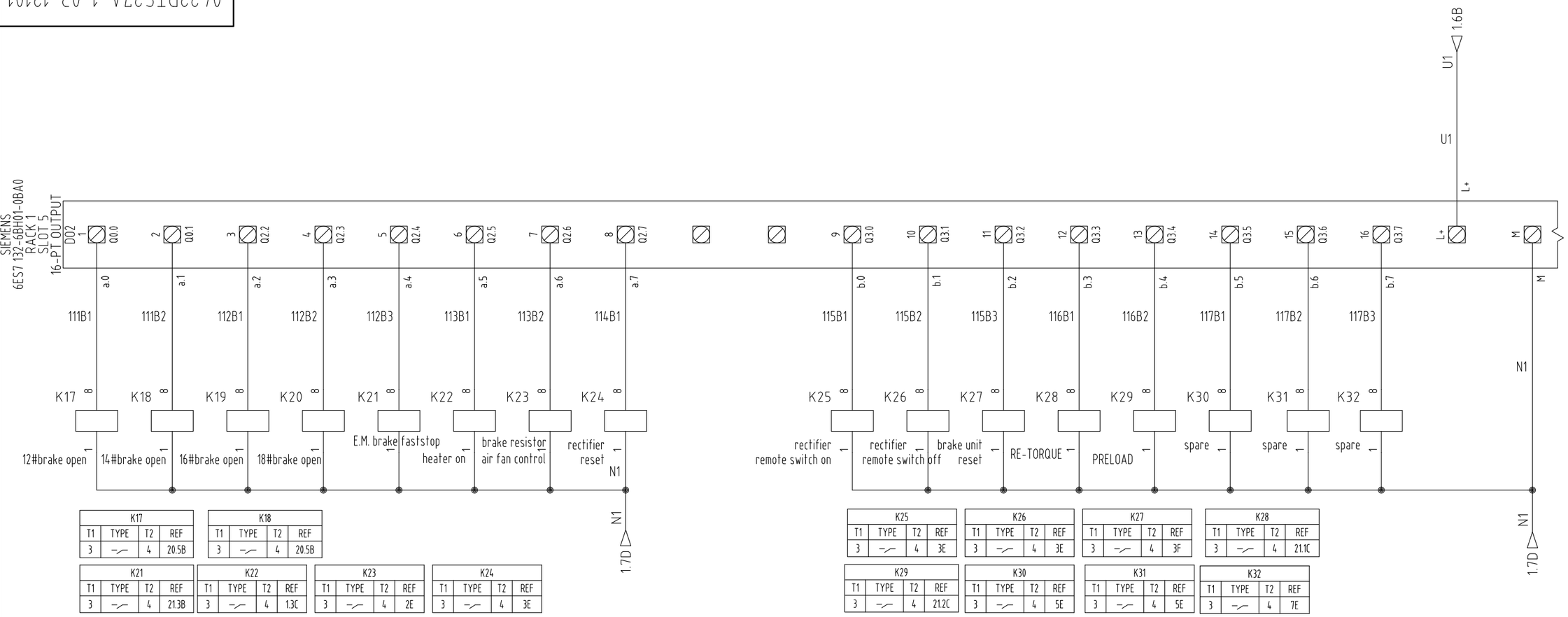

K17			
T1	TYPE	T2	REF
3		4	20.5B

K18			
T1	TYPE	T2	REF
3		4	20.5B

K21			
T1	TYPE	T2	REF
3		4	21.3B

K22			
T1	TYPE	T2	REF
3		4	1.3C

K23			
T1	TYPE	T2	REF
3		4	2E

K24			
T1	TYPE	T2	REF
3		4	3E

K25			
T1	TYPE	T2	REF
3		4	3E

K26			
T1	TYPE	T2	REF
3		4	3E

K27			
T1	TYPE	T2	REF
3		4	3F

K28			
T1	TYPE	T2	REF
3		4	21.1C

K29			
T1	TYPE	T2	REF
3		4	21.2C

K30			
T1	TYPE	T2	REF
3		4	5E

K31			
T1	TYPE	T2	REF
3		4	5E

K32			
T1	TYPE	T2	REF
3		4	7E

Q2.0	12#brake open	Q2.4	E.M. brake faststop
Q2.1	spare(14#brake open)	Q2.5	heater on
Q2.2	spare(16#brake open)	Q2.6	brake resistorair fan control(power box)
Q2.3	spare(18#brake open)	Q2.7	VFD Emergency stop reset

Q3.0	rectifier remote switch on	Q3.4	PRELOAD mode
Q3.1	rectifier remote switch off	Q3.5	spare
Q3.2	VFD fault reset	Q3.6	spare
Q3.3	RETORQUE mode	Q3.7	spare

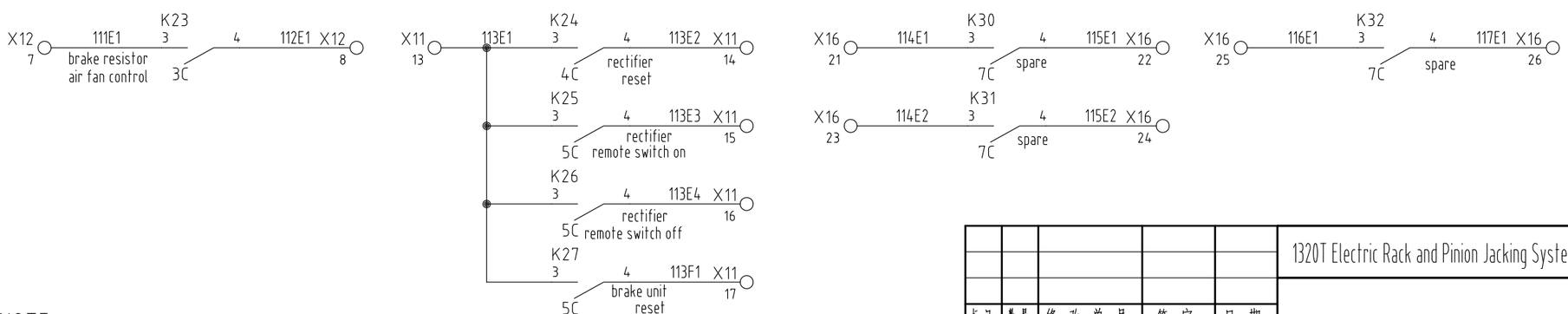

NOTE:

1、The PLC module uses 0.5 mm^2 wire, and the rest of the electrical components uses 1.0 mm^2 wire.

2、The equipment in dotted box don't belong to Central Control Station.

设计	
校对	
审核	
工艺	
标准	
批准	

标记	数量	修改单号	签字	日期
设计				
校核				
审核				
标检				
审定				
批准				

1320T Electric Rack and Pinion Jacking System

Leg Control Unit Circuit Dwg.

所属装配图号	0422PTS28A-1-03-12100
图号	0422PTS28A-1-03-12101
标记 S	版本
重量	
比例	1:1
共 18 页	第 11 页

WMMP 武汉船用机械有限责任公司

0422PTS27A-1-03-12101

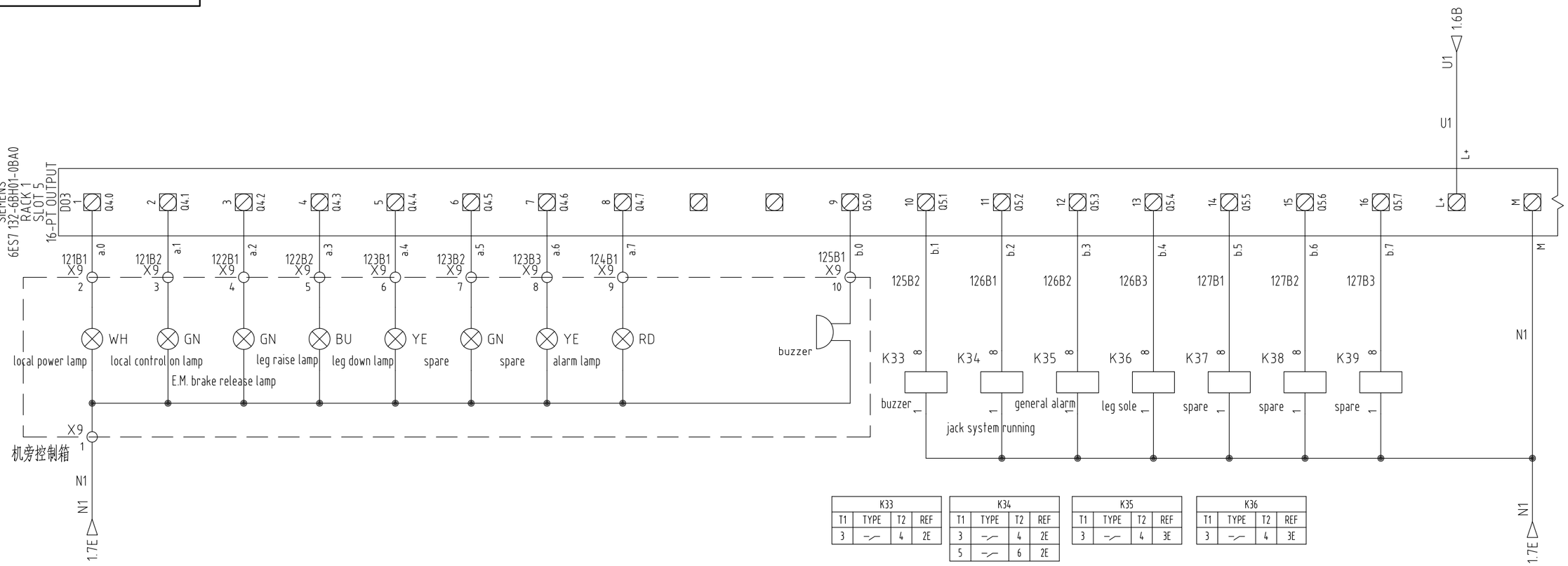

K33			
T1	TYPE	T2	REF
3	—/—	4	2E

K34			
T1	TYPE	T2	REF
3	—/—	4	2E
5	—/—	6	2E

K35			
T1	TYPE	T2	REF
3	—/—	4	3E

K36			
T1	TYPE	T2	REF
3	—/—	4	3E

Q4.0	local power lamp	Q4.4	leg down lamp
Q4.1	local control on lamp	Q4.5	spare
Q4.2	E.M. brake release lamp	Q4.6	spare
Q4.3	leg raise lamp	Q4.7	alarm lamp

Q5.0	buzzer	Q5.4	leg arrive seabed（DP）
Q5.1	buzzer（switch board）	Q5.5	spare
Q5.2	jack system running（switch board,crane）	Q5.6	spare
Q5.3	general alarm（SMS）	Q5.7	spare

K37			
T1	TYPE	T2	REF
3	—/—	4	2F

K38			
T1	TYPE	T2	REF
3	—/—	4	2F

K39			
T1	TYPE	T2	REF
3	—/—	4	3F

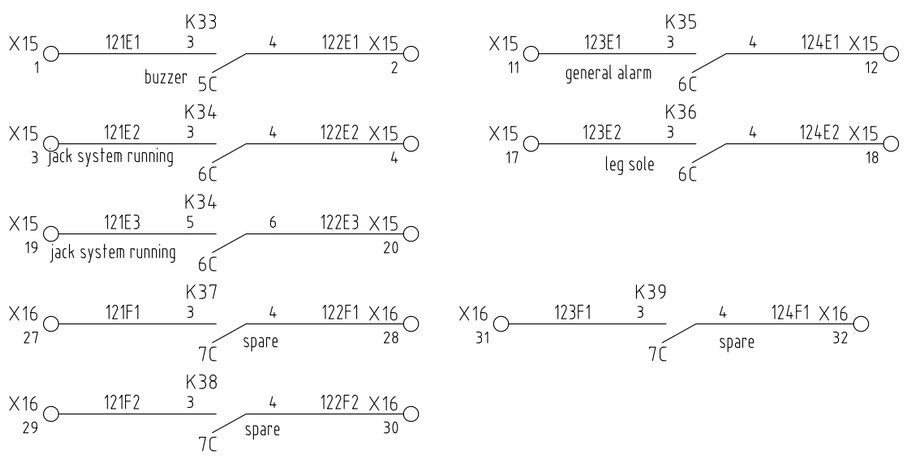

NOTE:

1、The PLC module uses 0.5 mm^2 wire, and the rest of the electrical components uses 1.0 mm^2 wire.

2、The equipment in dotted box don't belong to Central Control Station.

设计				
校对				
审核				
工艺				
标准				
批准				

标记	数量	修改单号	签字	日期
设计				
校核				
审核				
标检				
审定				
批准				

1320T Electric Rack and Pinion Jacking System

Leg Control Unit Circuit Dwg.

所属装配图号	0422PTS28A-1-03-12100
图号	0422PTS28A-1-03-12101
标记	S
版本	
重量	
比例	1:1
共 18 页	第 12 页

WMMP 武汉船用机械有限责任公司

0422PTS27A-1-03-12101

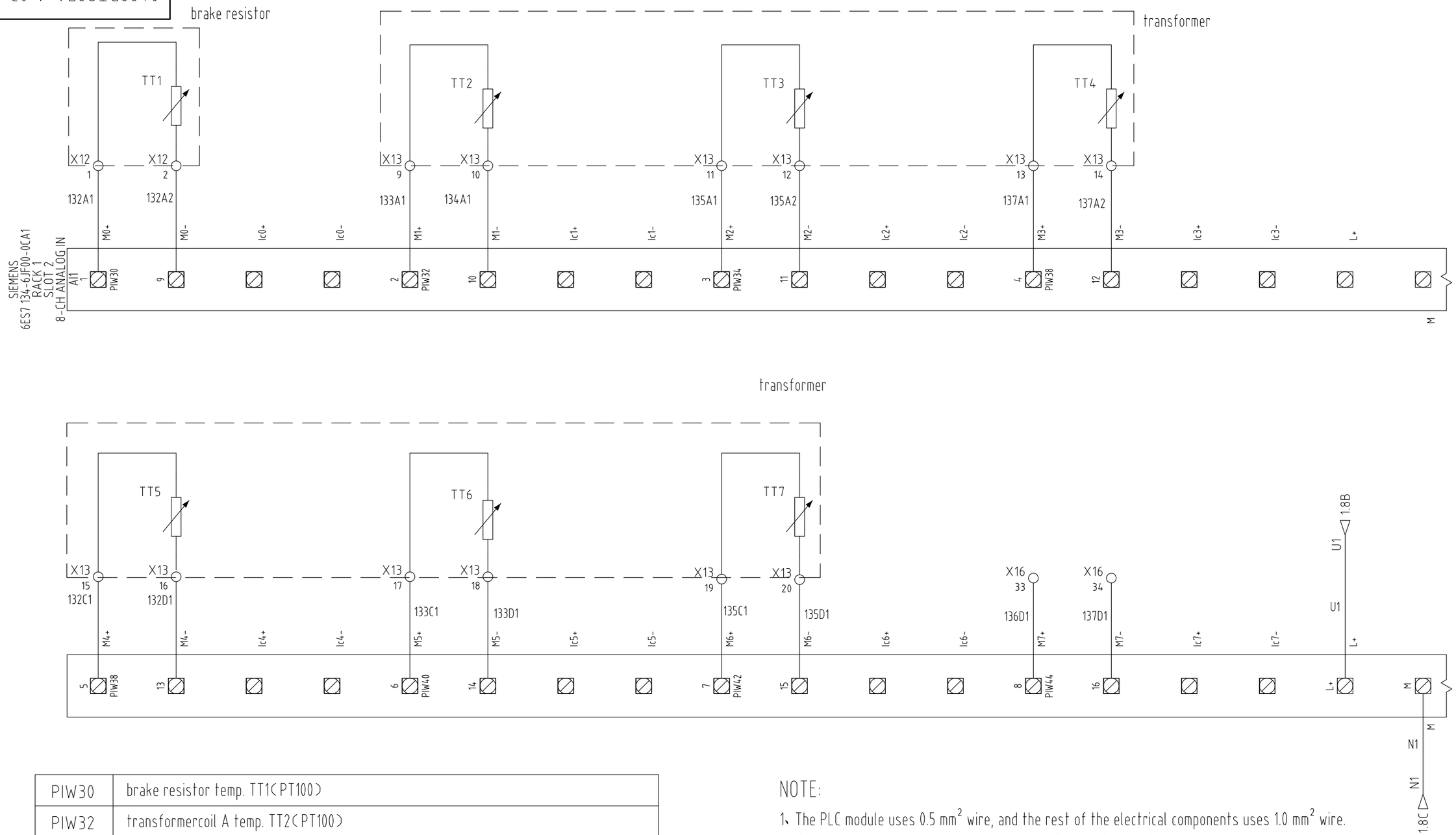

PIW30	brake resistor temp. TT1(PT100)
PIW32	transformercoil A temp. TT2(PT100)
PIW34	transformercoil B temp. TT3(PT100)
PIW36	transformercoil C temp. TT4(PT100)
PIW38	transformercoil X temp. TT5(PT100)
PIW40	transformercoil Y temp. TT6(PT100)
PIW42	transformercoil Z temp. TT7(PT100)
PIW44	spare

NOTE:

1、The PLC module uses 0.5 mm^2 wire, and the rest of the electrical components uses 1.0 mm^2 wire.

2、The equipment in dotted box don't belong to Central Control Station.

设计	
校对	
审核	
工艺	
标准	
批准	

标记	数量	修改单号	签字	日期
设计				
校核				
审核				
标检				
审定				
批准				

1320T Electric Rack and Pinion Jacking System

Leg Control Unit Circuit Dwg.

所属装配图号	0422PTS28A-1-03-12100
图号	0422PTS28A-1-03-12101
标记 S	版本
重量	
比例	1:1
共 18 页	第 13 页

WMMP 武汉船用机械有限责任公司

0422PTS27A-1-03-12101

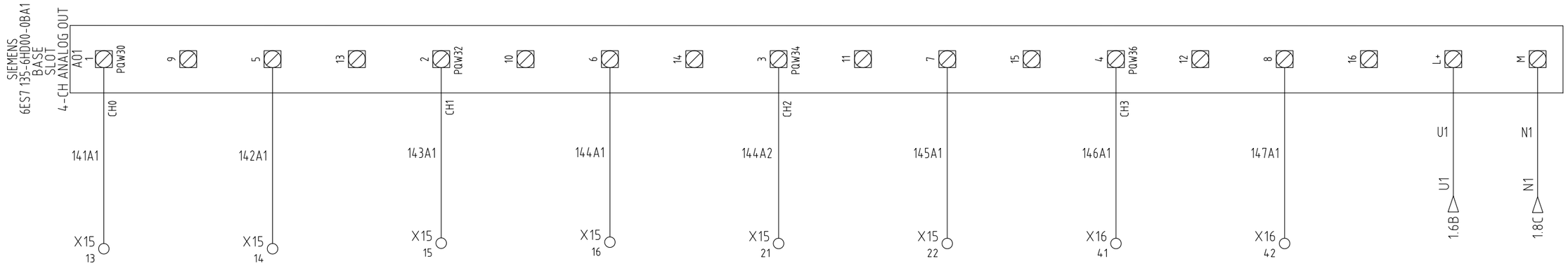

PQW30	leg load signal to DP(4~20mA)
PQW32	leg distance signal to DP(4~20mA)
PQW34	leg distance signal to Crane(4~20mA)
PQW36	spare

NOTE:

1、The PLC module uses 0.5 mm^2 wire, and the rest of the electrical components uses 1.0 mm^2 wire.

2、The equipment in dotted box don't belong to Central Control Station.

设计	
校对	
审核	
工艺	
标准	
批准	

标记	数量	修改单号	签字	日期
设计				
校核				
审核				
标检				
审定				
批准				

1320T Electric Rack and Pinion Jacking System

Leg Control Unit Circuit Dwg.

所属装配图号	0422PTS28A-1-03-12100
图号	0422PTS28A-1-03-12101
标记	S
版本	
重量	
比例	1:1
共 18 页	第 14 页

WMMP 武汉船用机械有限责任公司

0422PTS27A-1-03-12101

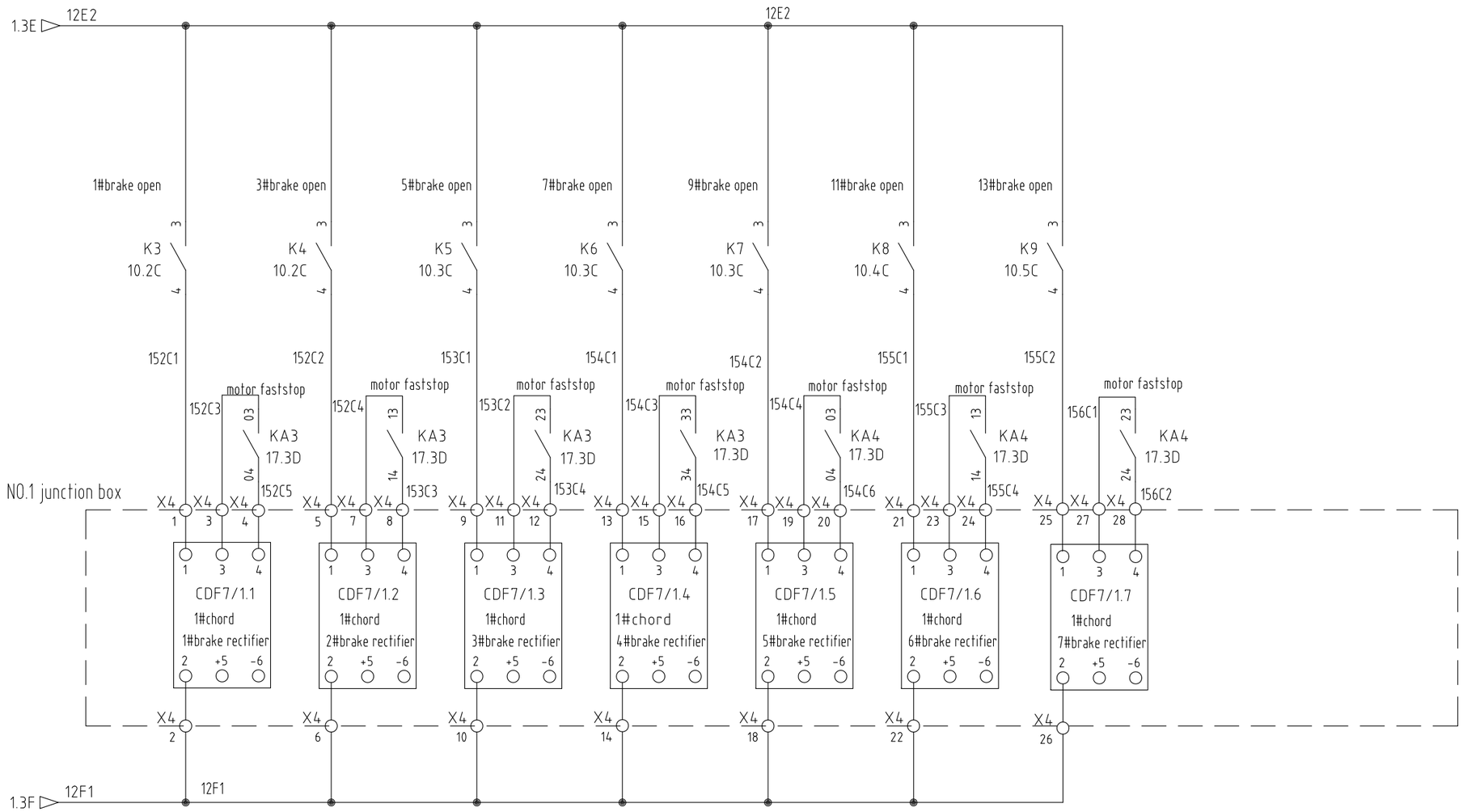

NOTE:

1、The PLC module uses 0.5 mm^2 wire, and the rest of the electrical components uses 1.0 mm^2 wire.

2、The equipment in dotted box don't belong to Central Control Station.

设计	
校对	
审核	
工艺	
标准	
批准	

标记	数量	修改单号	签字	日期
设计				
校核				
审核				
标检				
审定				
批准				

1320T Electric Rack and Pinion Jacking System

Leg Control Unit Circuit Dwg.

所属装配图号	0422PTS28A-1-03-12100
图号	0422PTS28A-1-03-12101
标记 S	版本
重量	比例 1:1
共 18 页	第 15 页

武汉船用机械有限责任公司

0422PTS27A-1-03-12101

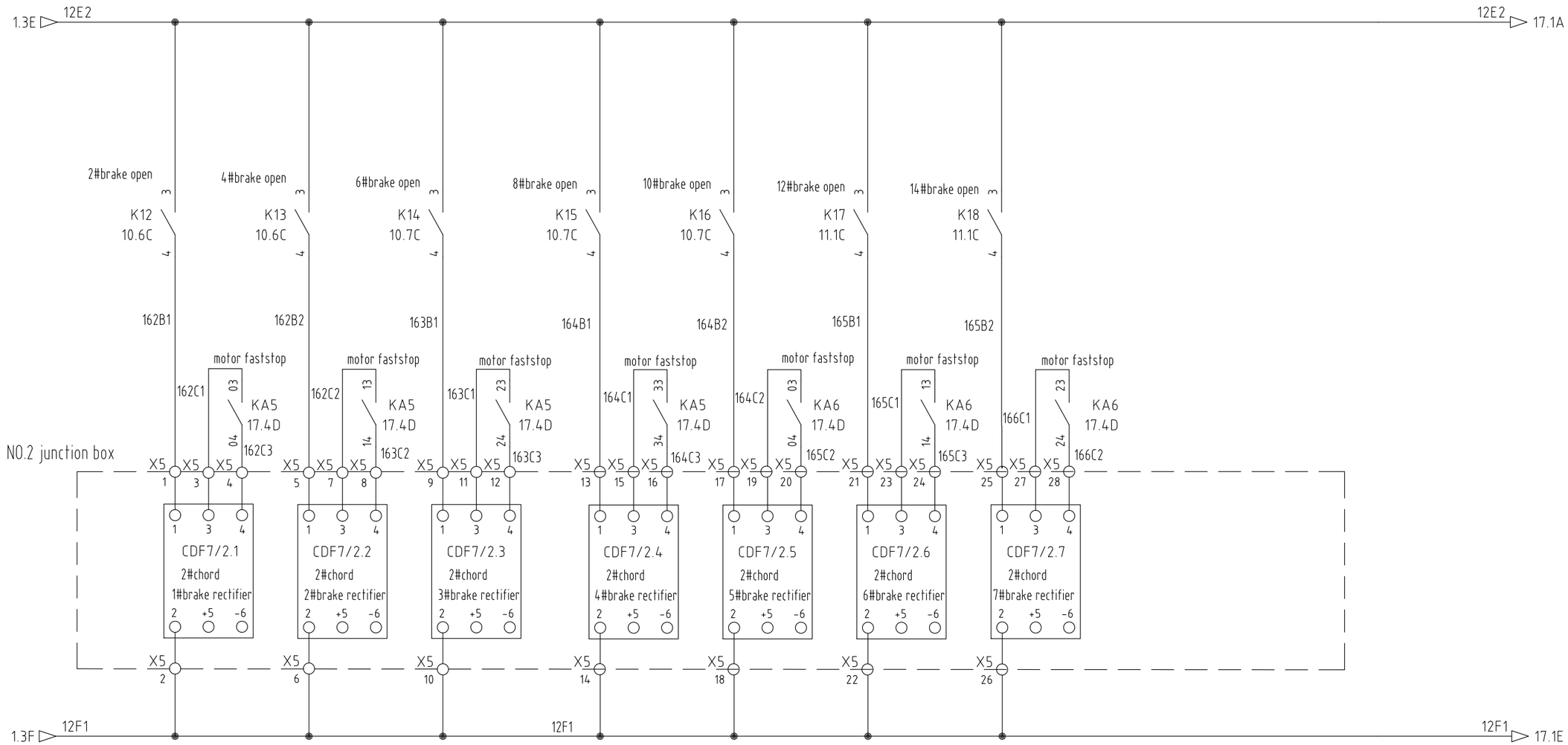

NOTE:

1、The PLC module uses 0.5 mm^2 wire, and the rest of the electrical components uses 1.0 mm^2 wire.

2、The equipment in dotted box don't belong to Central Control Station.

设计	
校对	
审核	
工艺	
标准	
批准	

标记	数量	修改单号	签字	日期
设计				
校核				
审核				
标检				
审定				
批准				

1320T Electric Rack and Pinion Jacking System

Leg Control Unit Circuit Dwg.

所属装配图号	0422PTS28A-1-03-12100
图号	0422PTS28A-1-03-12101
标记	S
版本	
重量	
比例	1:1
共 18 页	第 16 页

WMMP 武汉船用机械有限责任公司

0422PTS27A-1-03-12101

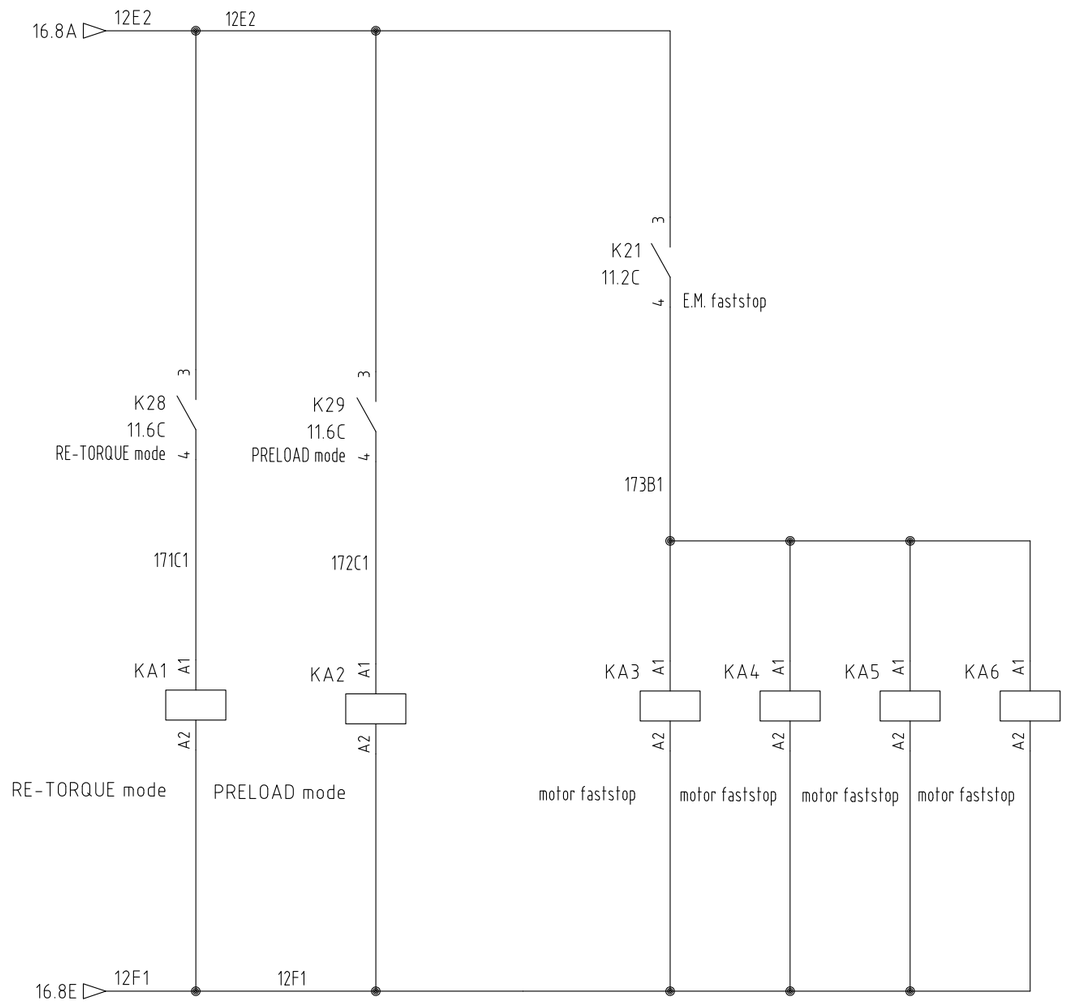

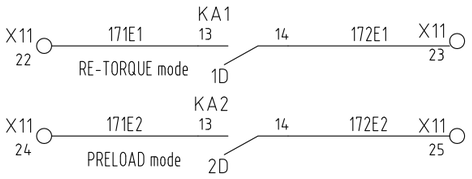

KA1			
T1	TYPE	T2	REF
03	—/—	04	9.5B
13	—/—	14	2E

KA2			
T1	TYPE	T2	REF
03	—/—	04	9.6B
13	—/—	14	2E

KA3			
T1	TYPE	T2	REF
03	—/—	04	15.2C
13	—/—	14	15.3C
23	—/—	24	15.3C
33	—/—	34	15.4C

KA4			
T1	TYPE	T2	REF
03	—/—	04	15.4C
13	—/—	14	15.5C
23	—/—	24	15.6C

KA5			
T1	TYPE	T2	REF
03	—/—	04	16.2C
13	—/—	14	16.3C
23	—/—	24	16.3C
33	—/—	34	16.4C

KA6			
T1	TYPE	T2	REF
03	—/—	04	16.5C
13	—/—	14	16.5C
23	—/—	24	16.6C

NOTE:

1、The PLC module uses 0.5 mm^2 wire, and the rest of the electrical components uses 1.0 mm^2 wire.

2、The equipment in dotted box don't belong to Central Control Station.

设计	
校对	
审核	
工艺	
标准	
批准	

标记	数量	修改单号	签字	日期
设计				
校核				
审核				
标检				
审定				
批准				

1320T Electric Rack and Pinion Jacking System

Leg Control Unit Circuit Dwg.

所属装配图号	0422PTS28A-1-03-12100
图号	0422PTS28A-1-03-12101
标记 S	版本
重量	
比例	1:1
共 18 页	第 17 页

武汉船用机械有限责任公司

0422PTS27A-1-03-12101

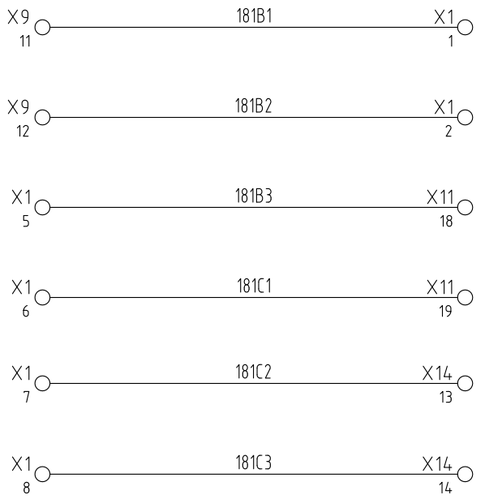

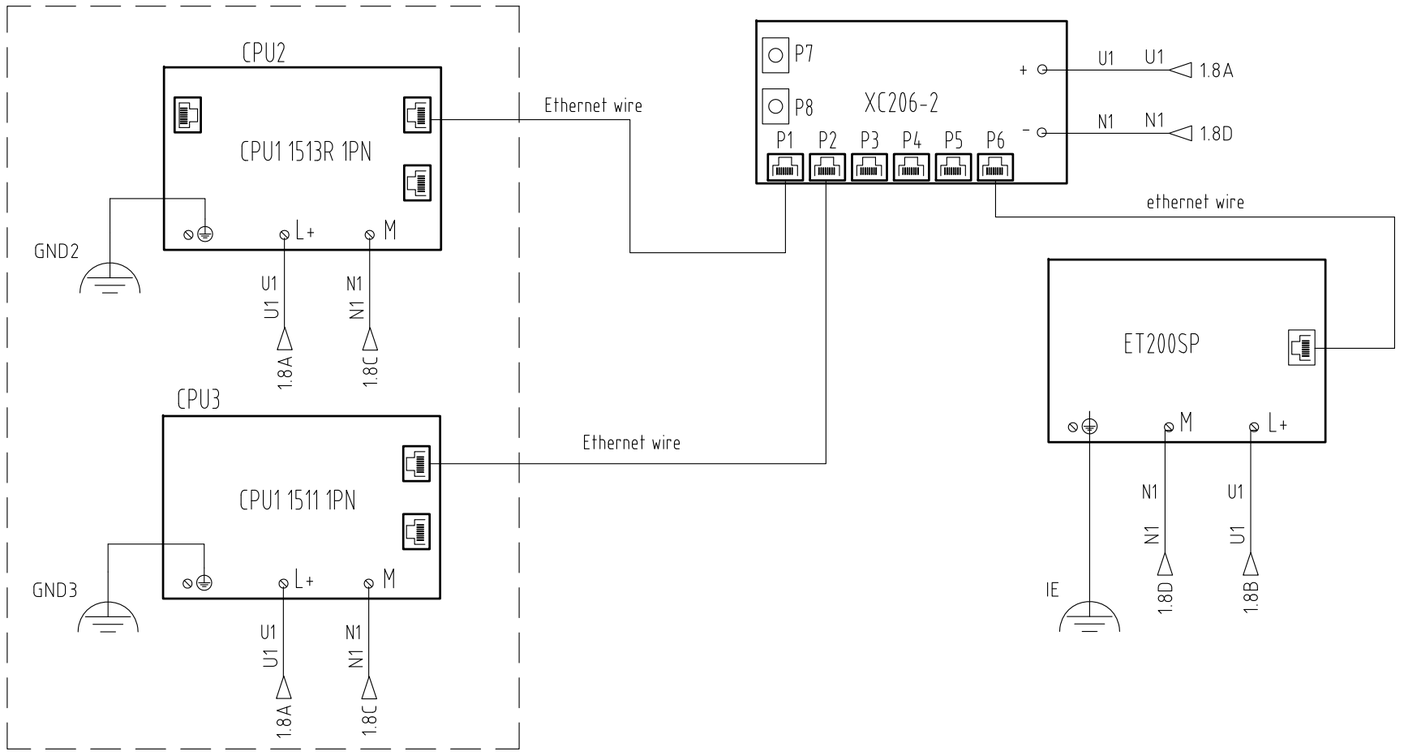

The above only in NO.1 leg control unit,
the other leg control unit do not have.

NOTE:

1、The PLC module uses 0.5 mm^2 wire, and the rest of the electrical components uses 1.0 mm^2 wire.

2、The equipment in dotted box don't belong to Central Control Station.

设计	
校对	
审核	
工艺	
标准	
批准	

标记	数量	修改单号	签字	日期
设计				
校核				
审核				
标检				
审定				
批准				

1320T Electric Rack and Pinion Jacking System

Leg Control Unit Circuit Dwg.

所属装配图号	0422PTS28A-1-03-12100
图号	0422PTS28A-1-03-12101
标记	S
版本	
重量	
比例	1:1
共 18 页	第 18 页

WMMP 武汉船用机械有限责任公司

0422PTS28A-1-03-12300

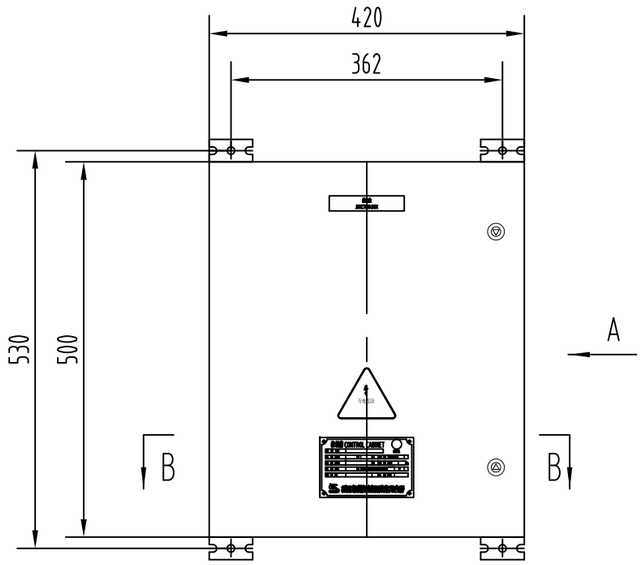

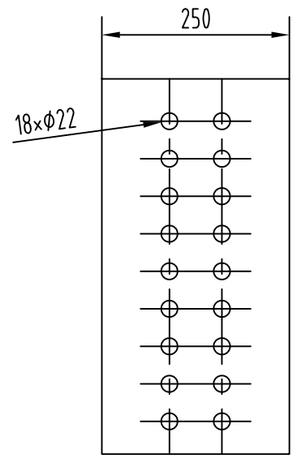

A view

Num.	nameplate content	Num.	nameplate content
1	NO.1 JUNCTION BOX OF NO.1 LEG	7	NO.1 JUNCTION BOX OF NO.3 LEG
2	NO.2 JUNCTION BOX OF NO.1 LEG	8	NO.2 JUNCTION BOX OF NO.3 LEG
3	NO.1 JUNCTION BOX OF NO.2 LEG	9	NO.1 JUNCTION BOX OF NO.4 LEG
4	NO.2 JUNCTION BOX OF NO.2 LEG	10	NO.2 JUNCTION BOX OF NO.4 LEG

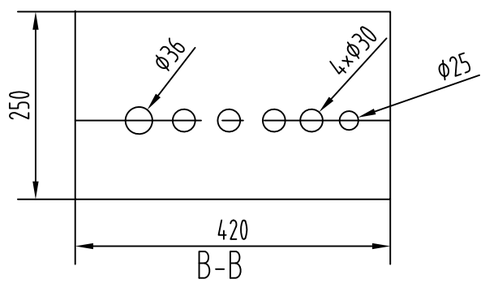

B-B

Material: stainless steel
Protection degree: IP56
Weight: 25KG
Cable enter method: From the gland

设计	
校对	
审核	
工艺	
标准	
批准	

标记	数量	修改单号	签字	日期
设计				
校核				
审核				
标检				
审定				
批准				

1320T Electric Rack and Pinion Jacking System

Leg Junction Box

assembly

所属装配图号	0422PTS28A-1-03-00
图号	0422PTS28A-1-03-12300
标记	S
版本	
重量	
比例	1:8
共 1 页	第 1 页

WMMP 武汉船用机械有限责任公司

0422PTS28A-1-03-31200

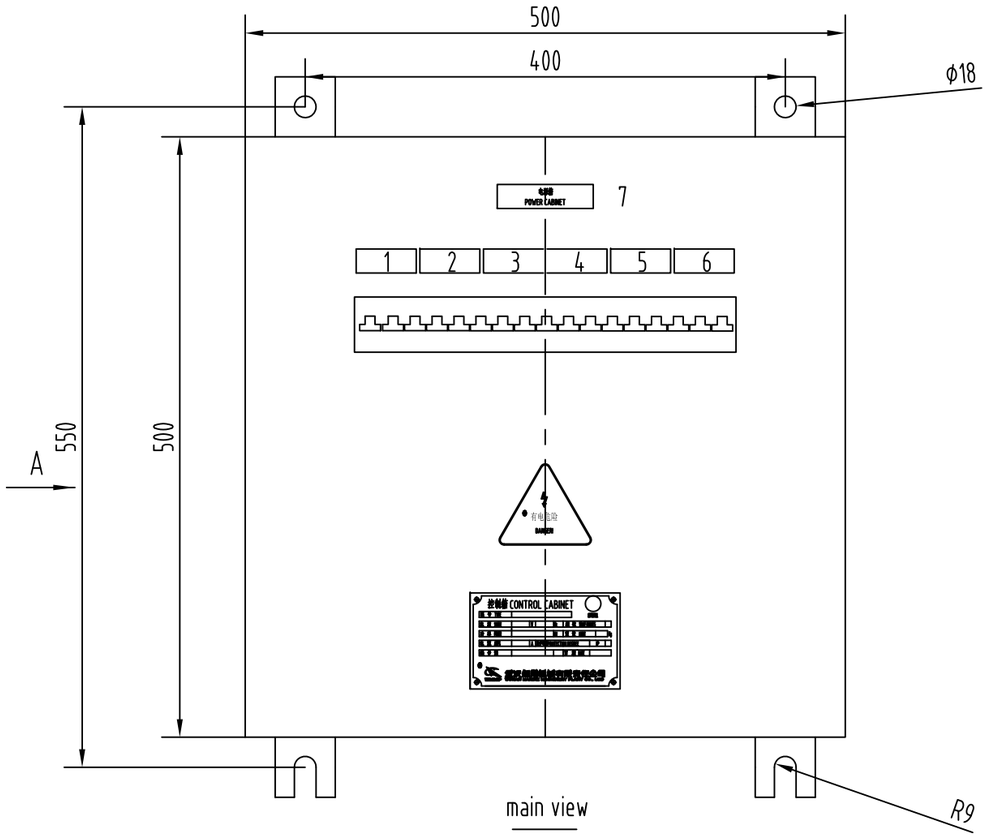

main view

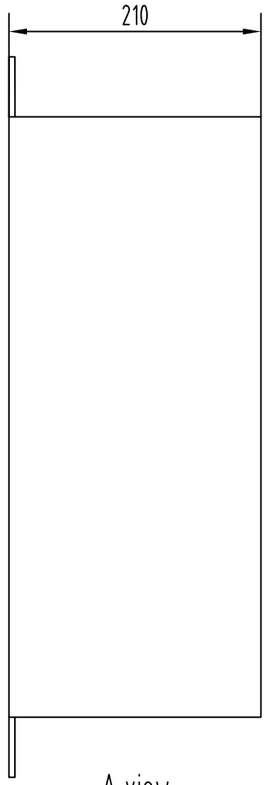

A view

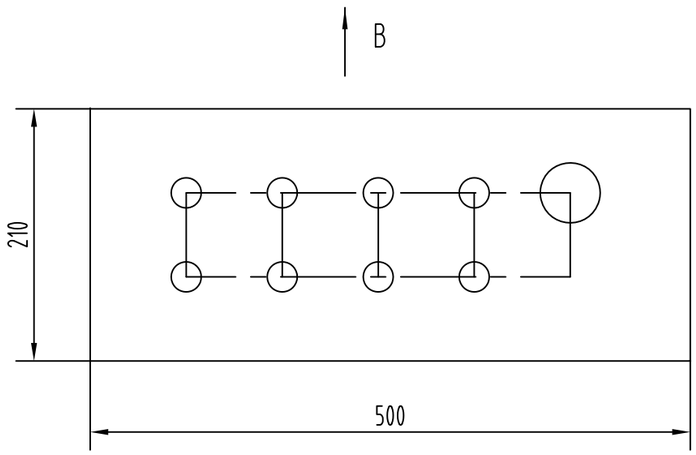

B view

NUM 1-6 content

power cabinet nameplate	
NUM.	nameplate content
1	COOLING FAN OF NO.1 TRANSFORMER
2	COOLING FAN OF NO.1 B.R
3	NO.1 LUBRICATION SYSTEM
4	SPARE
5	SPARE
6	NO.2 LUBRICATION SYSTEM
7	COOLING FAN OF NO.3 TRANSFORMER
8	COOLING FAN OF NO.2 B.R
9	NO.3 LUBRICATION SYSTEM
10	SPARE
11	SPARE
12	NO.4 LUBRICATION SYSTEM

Material：Q235
Protection degree：IP44
Weight：25KG
Cable enter method：From the gland

设计	
校对	
审核	
工艺	
标准	
批准	

标记	数量	修改单号	签字	日期
设计				
校核				
审核				
标检				
审定				
批准				

1320T Electric Rack and Pinion Jacking System

Power Cabinet

assembly

所属装配图号	0422PTS28A-1-03-00
图号	0422PTS28A-1-03-31200
标记	S
版本	
重量	
比例	1:5
共 1 页	第 1 页

WMMP 武汉船用机械有限责任公司

0422PTS28A-1-03-31101

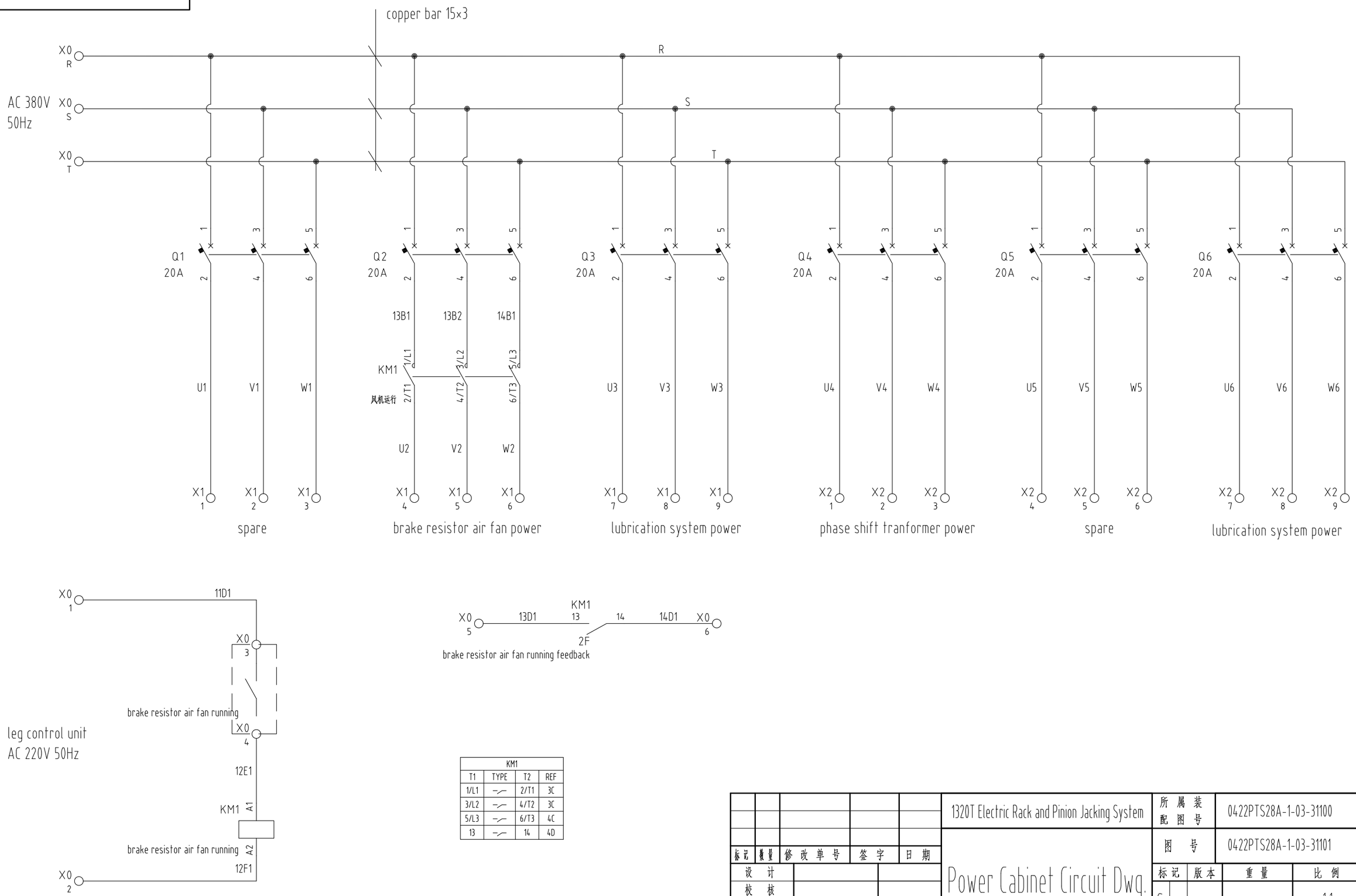

KM1			
T1	TYPE	T2	REF
1/L1	—⁄—	2/T1	3C
3/L2	—⁄—	4/T2	3C
5/L3	—⁄—	6/T3	4C
13	—⁄—	14	4D

设计	
校对	
审核	
工艺	
标准	
批准	

标记	数量	修改单号	签字	日期
设计				
校核				
审核				
标检				
审定				
批准				

1320T Electric Rack and Pinion Jacking System

Power Cabinet Circuit Dwg.

所属装配图号	0422PTS28A-1-03-31100
图号	0422PTS28A-1-03-31101
标记 S	版本
重量	比例 1:1
共 1 页	第 1 页

武汉船用机械有限责任公司

0422PTS28A-1-03-31500

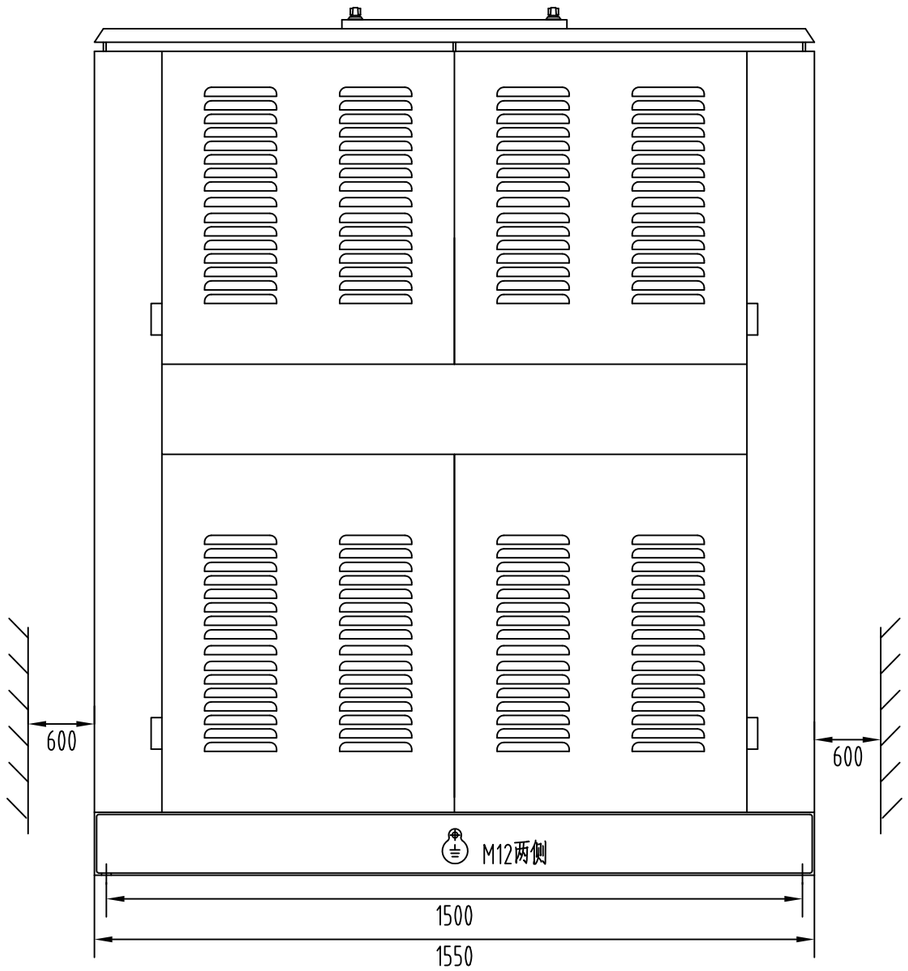

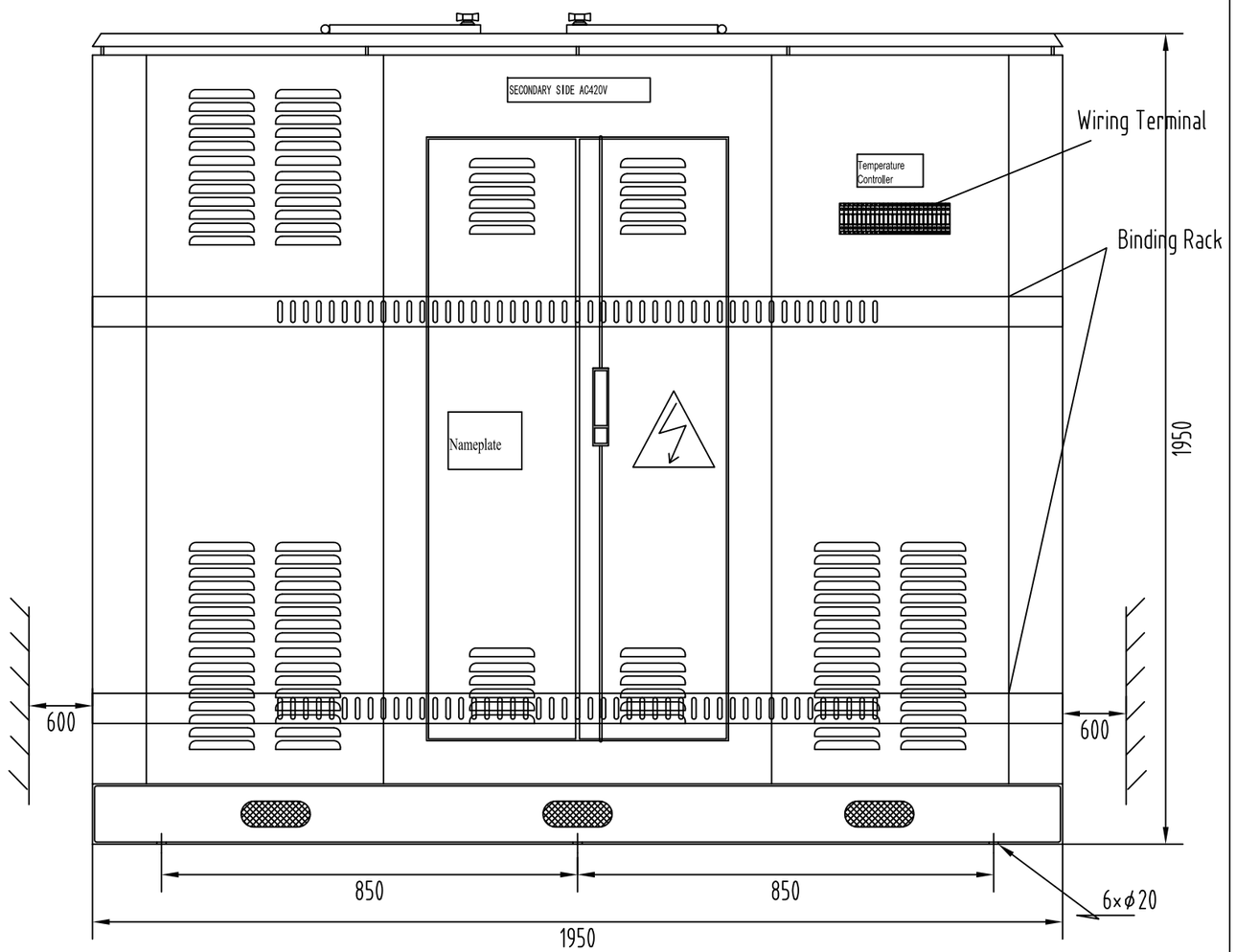

Primary: AC690V, Secondary: 2×AC 400V
Capacity: 600KVA
Protecing Degree: IP23
Colour: RAL7035
Wiring Connection Mode: Dyd (Two Primary Edges are Shifted ±7.5°)
Cooling Method: AF
Weight: About 2500KG
Insulation Class: F
Temperature Class: F

设计	
校对	
审核	
工艺	
标准	
批准	

标记	数量	修改单号	签字	日期
设计				
校核				
审核				
标检				
审定				
批准				

1320T Electric Rack and Pinion Jacking System

Phase-Shifting Transformer

所属装配图号	0422PTS28A-1-03-00
图号	0422PTS28A-1-03-31200
标记	S
版本	
重量	
比例	1:25
共 3 页	第 1 页

WMMP 武汉船用机械有限责任公司

0422PTS28A-1-03-31500

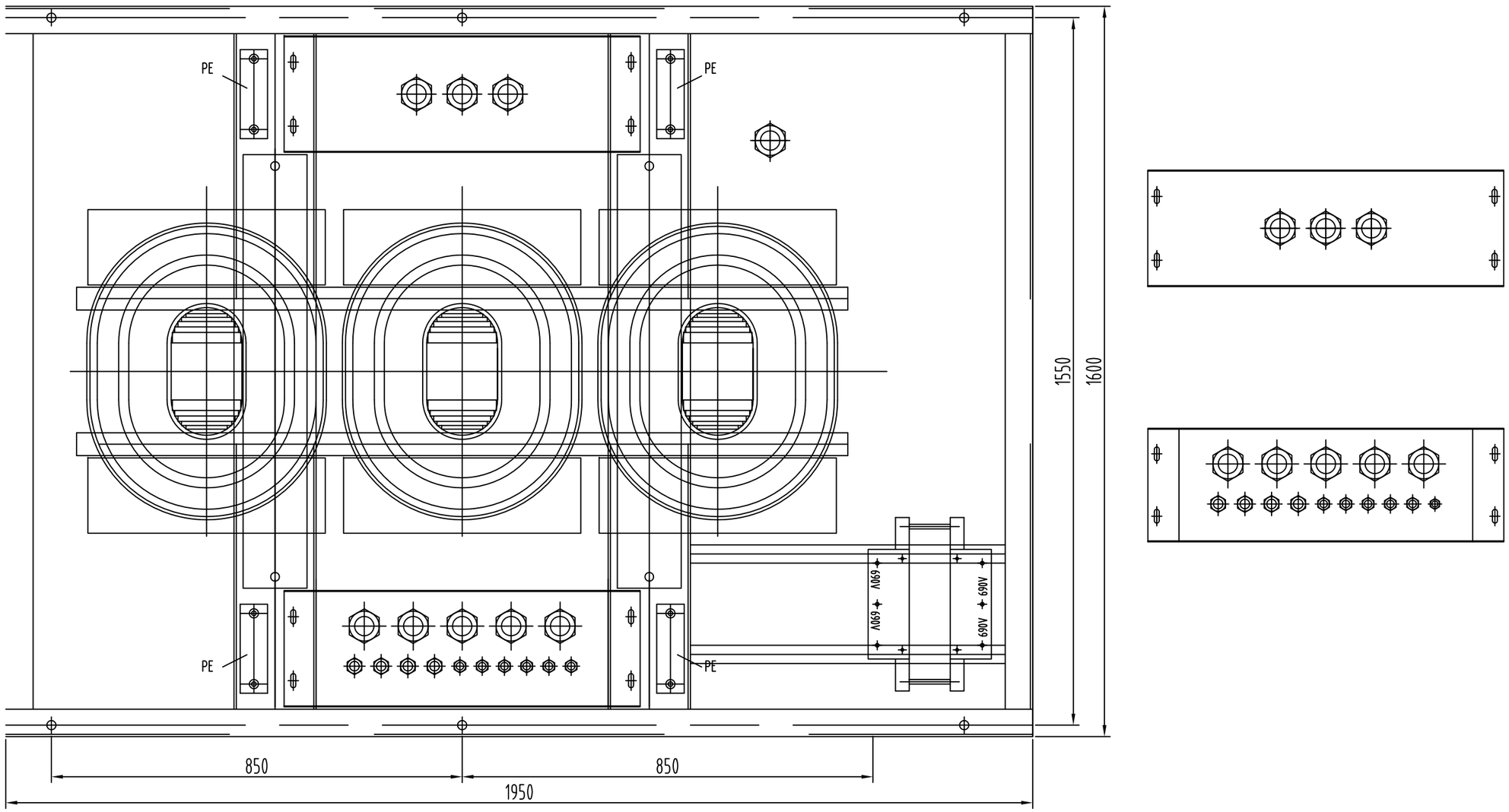

设计	
校对	
审核	
工艺	
标准	
批准	

标记	数量	修改单号	签字	日期
设计				
校核				
审核				
标检				
审定				
批准				

1320T Electric Rack and Pinion Jacking System

Phase-Shifting Transformer

所属装配图号	0422PTS28A-1-03-00
图号	0422PTS28A-1-03-31200

标记	版本	重量	比例
S			1:5

共 3 页 第 2 页

武汉船用机械有限责任公司

0422PTS28A-1-03-31200

1.电气接线图1
Electrical wiring diagram

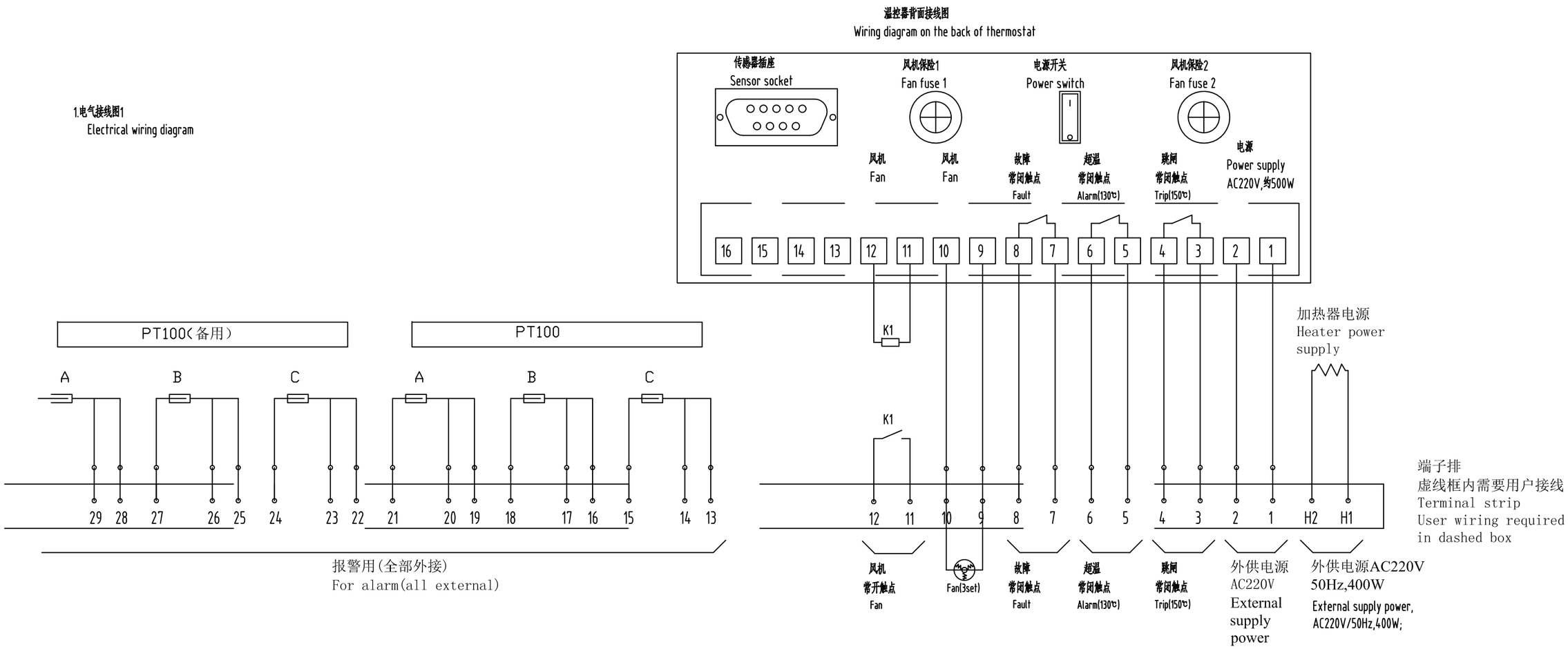

设计	
校对	
审核	
工艺	
标准	
批准	

标记	数量	修改单号	签字	日期
设计				
校核				
审核				
标检				
审定				
批准				

1320T Electric Rack and Pinion Jacking System

所属装配图号	0422PTS28A-1-03-00
图号	0422PTS28A-1-03-31200

标记	版本	重量	比例
S			1:1

共 3 页 第 3 页

武汉船用机械有限责任公司

0422PTS28A-1-03-31300

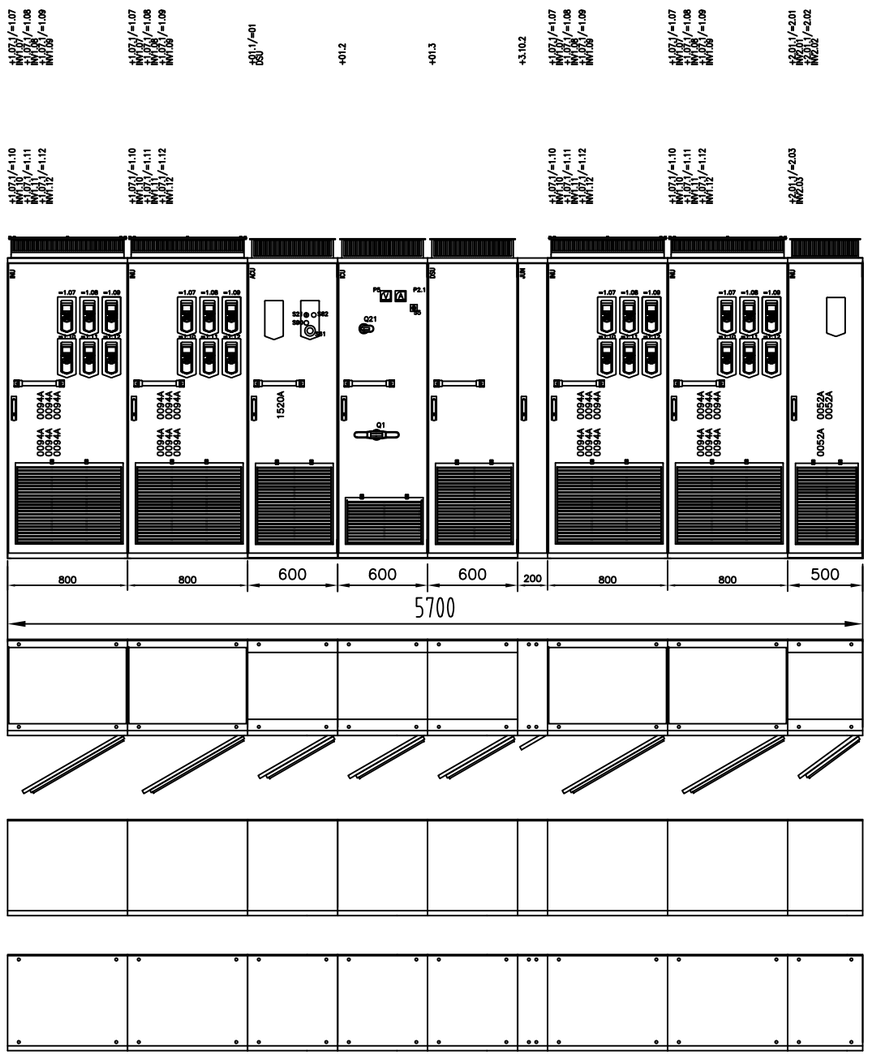

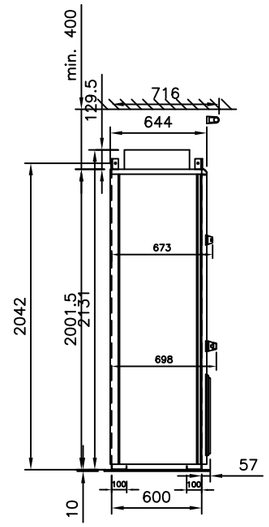

Degree of Protection：IP22
Color：RAL7035
Standards: EN/IEC
EMC Protection: 2nd Environment

设计	
校对	
审核	
工艺	
标准	
批准	

标记	数量	修改单号	签字	日期
设计				
校核				
审核				
标检				
审定				
批准				

1320T Electric Rack and Pinion Jacking System

Variable Frequency Drive Cabinet

所属装配图号	0422PTS28A-1-03-00
图号	0422PTS28A-1-03-31300
标记	S
版本	
重量	
比例	1:40
共 1 页	第 1 页

武汉船用机械有限责任公司

ACS 880 MultiDrive

Project name:Zhaka Jack-up Lift System

Customer:华西海工

ABB order ref: 503856681

Application Engineer : Sky-Xin Zhang

Project Manager : Chunyu Song

ABB Beijing Drive Systems Co., Ltd.

No.1,Block D, A-10

Jiuxianqiao Beilu, Chaoyang District,

Beijing 1000156, P.R.China

Tel.:(86-10)58217788

Fax:(86-10)58217618

1. Contents

2. Dimension Drawing
Connection Drawing

3. =01
DSU
ACS880-307-0910A-3

4. =1.01
INV1.01
ACS880-107-0078A-3

5. =1.02
INV1.02
ACS880-107-0078A-3

6. =1.03
INV1.03
ACS880-107-0078A-3

7. =1.04
INV1.04
ACS880-107-0078A-3

8. =1.05
INV1.05
ACS880-107-0078A-3

9. =1.06
INV1.06
ACS880-107-0078A-3

10. =1.07
INV1.07
ACS880-107-0078A-3

11. =1.08
INV1.08
ACS880-107-0078A-3

12. =1.09
INV1.09
ACS880-107-0078A-3

13. =1.10
INV1.10
ACS880-107-0078A-3

14. =1.11
INV1.11
ACS880-107-0078A-3

15. =1.12
INV1.12
ACS880-107-0078A-3

16. =2.01
INV2.01
ACS880-107-0078A-3

ACS 880 MultiDrive

ABB

ABB Beijing Drive Systems Co., Ltd.

No.1,Block D, A-10

Jiuxianqiao Beilu, Chaoyang District,

Beijing 1000156, P.R.China

Tel.:(86-10)58217788

Fax:(86-10)58217618

17. =2.02

INV2.02

ACS880-107-0078A-3

18. =2.03

INV2.03

ACS880-107-0078A-3

19. =2.04

INV2.04

ACS880-107-0078A-3

20. =2.05

INV2.05

ACS880-107-0078A-3

21. =2.06

INV2.06

ACS880-107-0078A-3

22. =2.07

INV2.07

ACS880-+C45:C46107-0078A-3

23. =2.08

INV2.08

ACS880-107-0078A-3

24. =2.09

INV2.09

ACS880-107-0078A-3

25. =2.10

INV2.10

ACS880-107-0078A-3

26. =2.11

INV2.11

ACS880-107-0078A-3

27. =2.12

INV2.12

ACS880-107-0078A-3

28. =60

Braking Unit

ACS880-607-0500-3

29.

30.

31.

32.

We reserve all rights in this document and in the information contained therein. Reproduction, use or disclosure to third parties without express authority is strictly forbidden. Copr. ABB Automation

Degree of protection	IP22
Standards	EN/IEC
EMC protection	2nd environment
Cable entry type	Standard
Colour	Special colour, RAL colours, RAL 7035
Additional information	

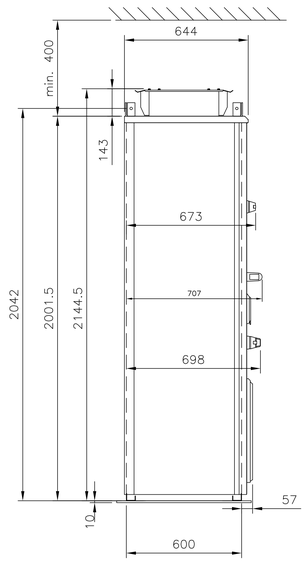

LEGEND	
Q1.1	SUPPLY UNIT MAIN SWITCH
Q21	CONTROL POWER SWITCH
A30	TIME COUNTER
P2.1	AC CURRENT L1
P2.2	AC CURRENT L1
P5.1-2	AC VOLTAGE
S5.1-2	AC VOLTAGE SWITCH
S21	SUPPLY UNIT MAIN CONTACTOR CTRL
S62	EMERGENCY STOP RESET
S90	EARTH FAULT RESET
S30	LOCAL/REMOTE

P340530 / 29711

Cust. Doc. No.	Prepared 2023/8/3 Sky-Xin Zhang	Title ACS880 Multidrives	Dimensional drawing EDA1 / Item des.
Customer WMMP	Approved 2023/8/3 Shuo Wang		Scale (A3) 30 / Rev.ind. B / Lang. EN
	Project Zhaka Jack-up Lift System	ABB Drives	Doc. No. 3ABDC230674-311 / Sheet 311
ABB Ref. No. _ Cust Ref. No.	Zhaka Jack-up Lift System-1		Cont. –

THIS PART END OF CABINETS,
IF CUSTOMER USE IT

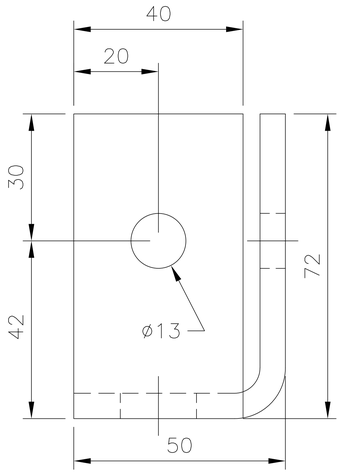

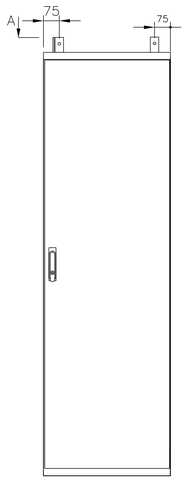

THIS PART BETWEEN OF CABINETS,
IF CUSTOMER USE IT

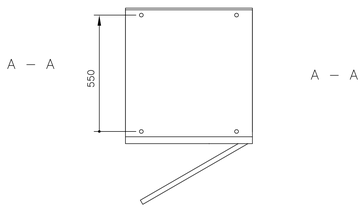

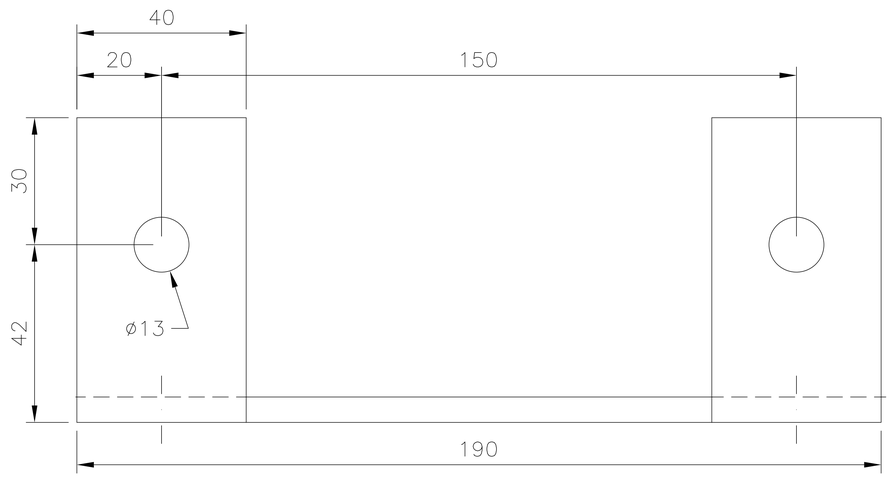

Cust. Doc. No.	Prepared	Title	Dimension drawing EDA1	Item des.	
Customer	Approved		Scale (A3)	Rev.ind.	Lang.
	Project	ABB ABB Drives	Doc. No.		Sheet
ABB Ref. No. Cust Ref. No.					Cont. —

524

We reserve all rights in this document and in the information contained therein. Reproduction, use or disclosure to third parties without express authority is strictly forbidden. Copr. ABB Automation

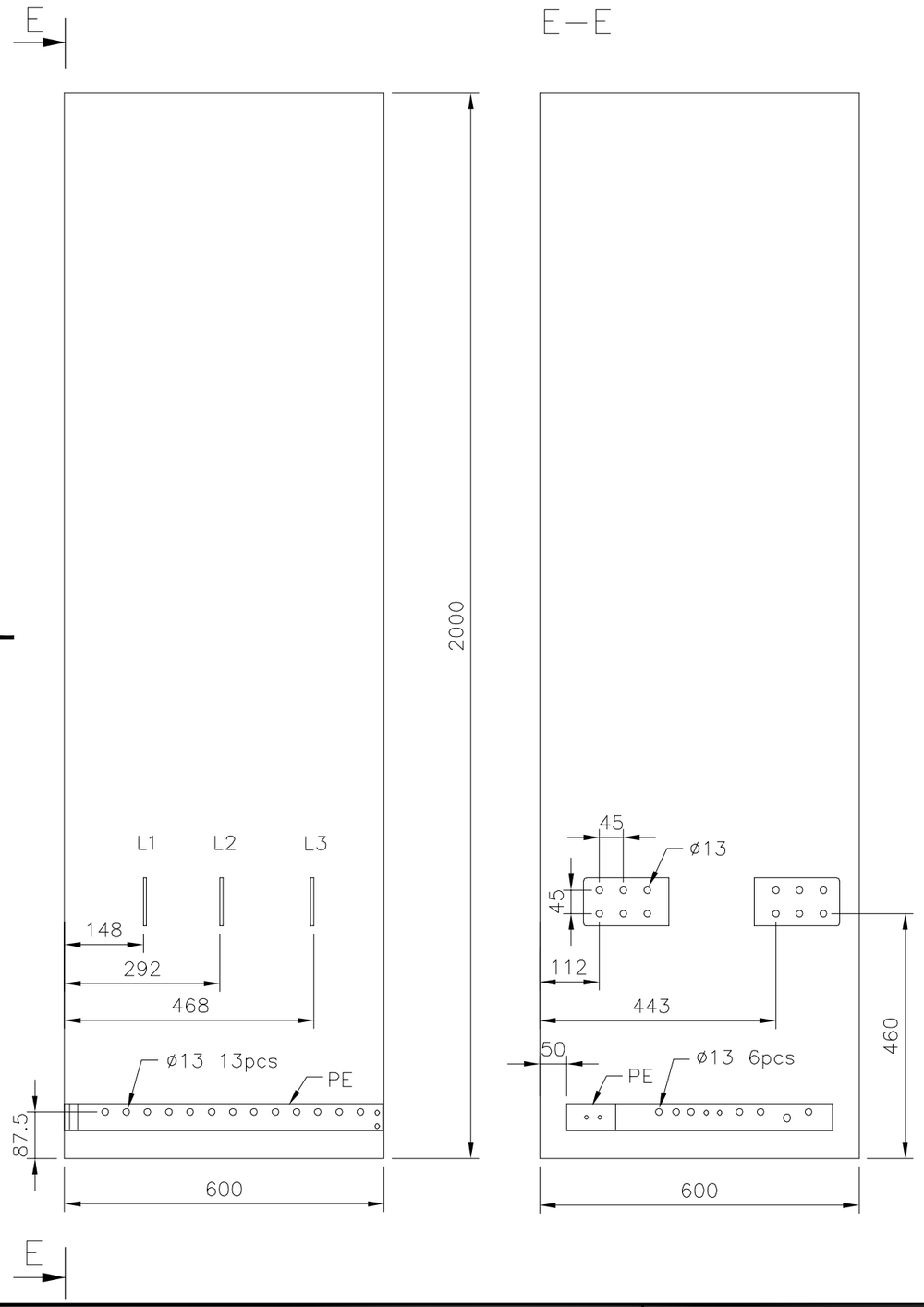

Used in	Location
DSU	+01.2

Cust. Doc. No.	Prepared 2.8.2023	Title	Dimensional drawing	Item des.	
Customer WMMP	Approved Generated by ADG2	ACS880 Multidrives	EDA1		
	Project Zhaka Jack–up Lift System		Scale (A3) 10	Rev.ind. .1	Lang. EN
		ABB Drives	Doc. No. –350		Sheet 350
ABB Ref. No. _ Cust Ref. No.	Zhaka Jack–up Lift System–1				Cont. 351

1525

We reserve all rights in this document and in the information contained therein. Reproduction, use or disclosure to third parties without express authority is strictly forbidden. Copr. ABB Automation

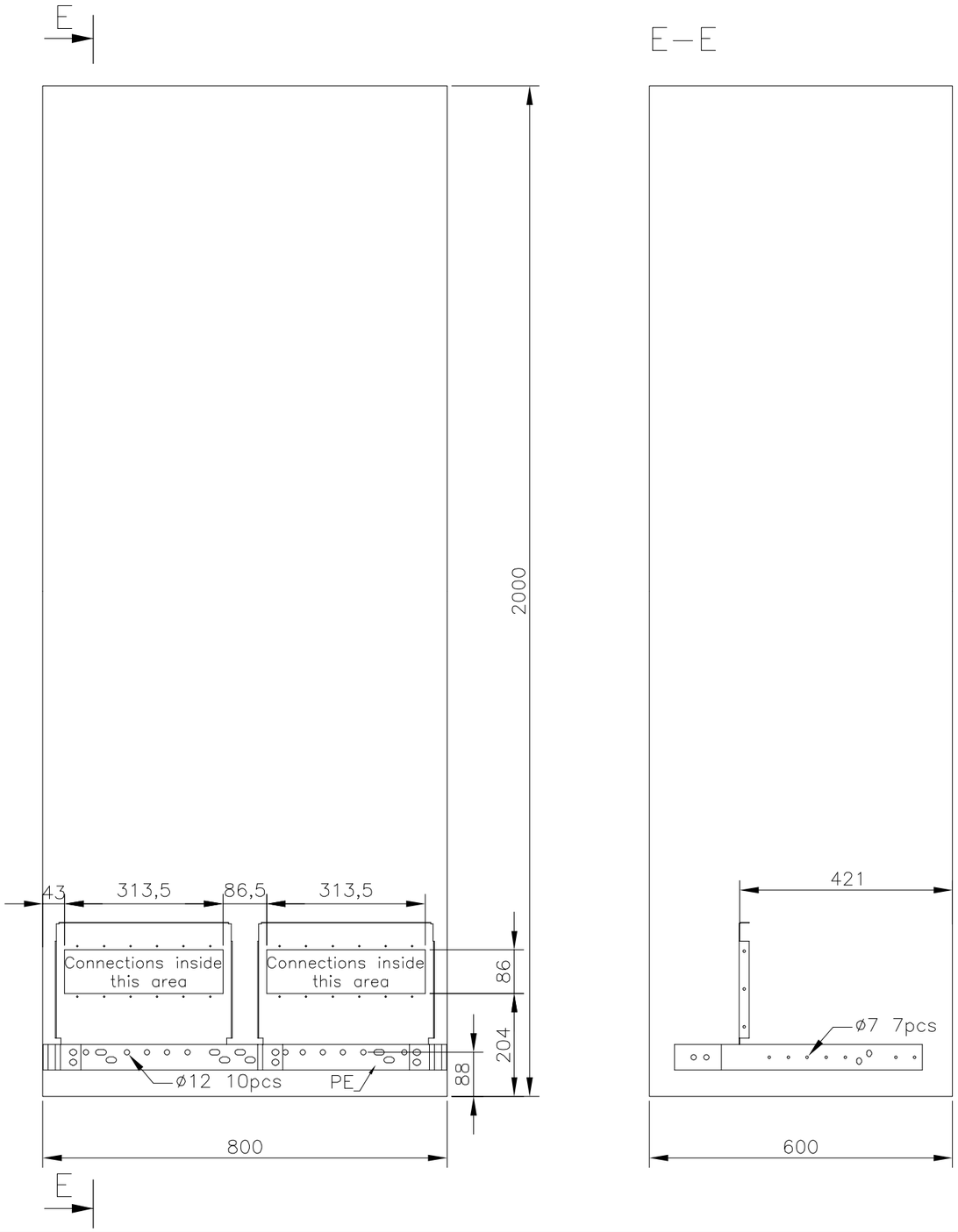

Used in	Location
INV1.01	+1.01.1
INV1.07	+1.07.1
INV2.01	+2.01.1
INV2.07	+2.07.1

Cust. Doc. No.	Prepared 2.8.2023	Title ACS880 Multidrives	Dimensional drawing EDA1	Item des.	
Customer WMMP	Approved Generated by ADG2		Scale (A3) 10	Rev.ind. .1	Lang. EN
	Project Zhaka Jack–up Lift System	ABB Drives	Doc. No. –351		Sheet 351
ABB Ref. No. _ Cust Ref. No.	Zhaka Jack–up Lift System–1				Cont. 352

We reserve all rights in this document and in the information contained therein. Reproduction, use or disclosure to third parties without express authority is strictly forbidden. Copr. ABB Automation

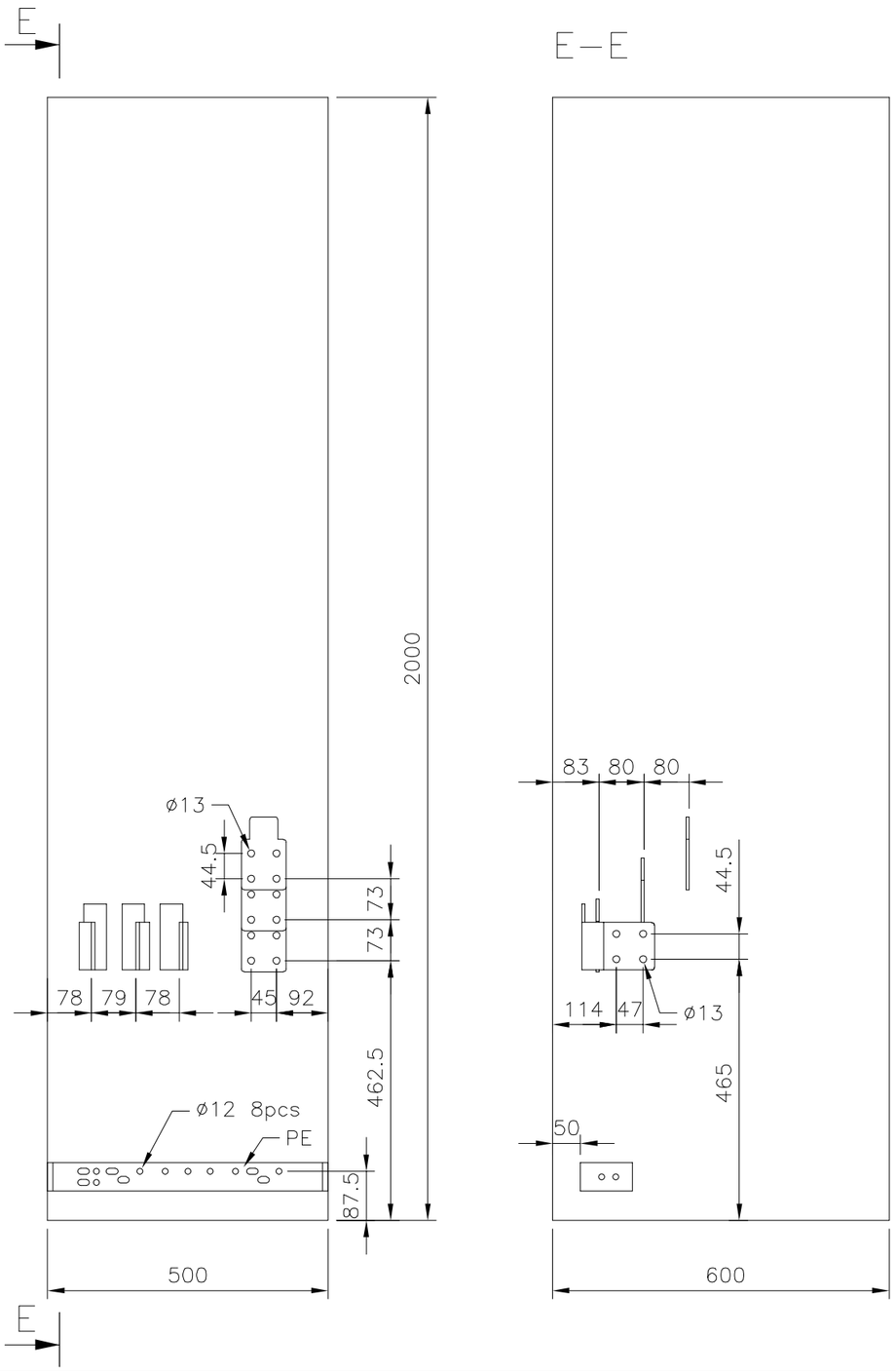

Used in	Location
DBU	+60.1

Cust. Doc. No.	Prepared 2.8.2023	Title	Dimensional drawing	Item des.	
Customer WMMP	Approved Generated by ADG2	ACS880 Multidrives	EDA1		
	Project Zhaka Jack–up Lift System		Scale (A3) 10	Rev.ind. .1	Lang. EN
ABB Ref. No. _ Cust Ref. No.	Zhaka Jack–up Lift System–1	ABB Drives	Doc. No. –352		Sheet 352
					Cont. –

ACS880 Multidrives Marine Plates

Project:
Producer order nr. **3ABDC230674**

Material: AOBCA 1,5 Background color:White Text color:Black Font:Arial
Connection by: self-adhesive tape and Screws

Models:

	size L	size H	Char Height	Char per line	Lines
1(A1) Switch board name sign	150	33	20	6	1
2(B1) Switch bay name sign	150	33	6	30	3
3(C1) Apparatur sign	62	13	3.5	17	2
4(D1) Device sing	68	18	3.5	17	2
5(E1) Grounding device sign	52	13	3.5	17	2
6 Drive Main status (cust.specific)	200	33	10*	25*	1*

* = example solution

Kaiverrettevien ruuvikiinnitteisten kilpien mallit

A1 KESKUKSEN TUNNUSKILPI 33 x150.
Kirjainkorkeus 20mm,kirjainleveys normaali
Merkkejä enintään 6kpl.Asennus ensimmäisen kentän tunnuskilpien linjaan.

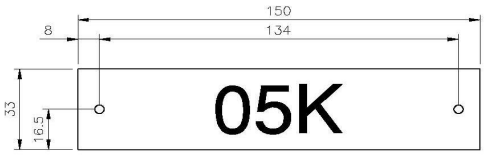

B1 KENTÄN TUNNUSKILPI 33 x150.
Kirjainkorkeus 6mm,kirjainleveys normaali.
Merkkejä enintään 30kpl/rivi x 3 riviä.

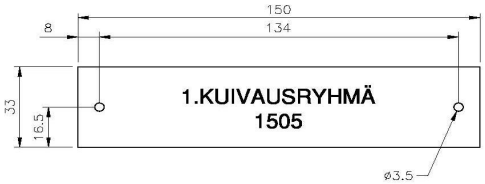

C1 KOJEEN KILPI 13 x 62mm. Kirjainkorkeus 3,5mm.Kirjainleveys normaali.
Merkkejä enintään 17kpl/rivi x 2riviä.

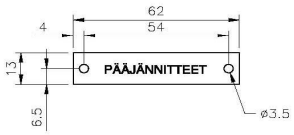

D1 MAADOITUKYTKIMEN LISÄKILPI 18 x 68mm.
Suomi VJ 3451 2183 . Englanti VJ 3451 2191.
Saksa VJ 3451 2205 . Ruotsi VJ 3451 2213.
Kaiverrusohjeen koodi VJ 3451 2132.

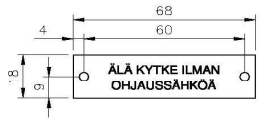

HUOM! Kilpien mittojen toleranssit:
--Ulottumamitat ±0,5mm.
--Reikien mitoitus ±0,2mm.
--Kilven ruuvinreikä Ø3.5mm ±0,2mm.

E1 VIRTA-ASETTELU KILVET
Kaiverrusohje koodi VJ 3451 3341.

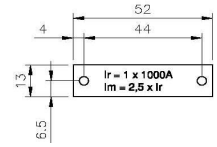

-Kaiverruslevy valkoinen-musta-valkoinen (AOBCA 1,5).
Kaiverretaan pintakerroksen läpi.

TL01	Line	Plate text	Qty	Location
Model 2	1	+01.1	1	+01.1
	2	=01		
	3	ACU		
Model 2	1	+01.2	1	+01.2
	2	=01		
	3	ICU		
Model 2	1	+01.3	1	+01.3
	2	=01		
	3	DSU		
Model 2	1	+1.01.1	1	+1.01.1
	2	=1.01		
	3	INV1.01		
Model 2	1	+1.01.1	1	+1.01.1
	2	=1.02		
	3	INV1.02		
Model 2	1	+1.01.1	1	+1.01.1
	2	=1.03		
	3	INV1.03		
Model 2	1	+1.01.1	1	+1.01.1
	2	=1.04		
	3	INV1.04		
Model 2	1	+1.01.1	1	+1.01.1
	2	=1.05		
	3	INV1.05		
Model 2	1	+1.01.1	1	+1.01.1
	2	=1.06		
	3	INV1.06		
Model 2	1	+1.07.1	1	+1.07.1
	2	=1.07		

TL01	Line	Plate text	Qty	Location
	3	INV1.07		
Model 2	1	+1.07.1	1	+1.07.1
	2	=1.08		
	3	INV1.08		
Model 2	1	+1.07.1	1	+1.07.1
	2	=1.09		
	3	INV1.09		
Model 2	1	+1.07.1	1	+1.07.1
	2	=1.10		
	3	INV1.10		
Model 2	1	+1.07.1	1	+1.07.1
	2	=1.11		
	3	INV1.11		
Model 2	1	+1.07.1	1	+1.07.1
	2	=1.12		
	3	INV1.12		
Model 2	1	+1.07.2	1	+1.07.2
	2	=1.07		
	3	INV1.07		
Model 3	1	CONTROL VOLTAGE	1	+01.2
	2	DISCONNECTION SWITCH		-Q21
Model 3	1	SUPPLY UNIT	1	+01.2
	2	MAIN SWITCH		-Q1.1
Model 3	1	AC VOLTAGE	2	+01.2
	2			-P5.1-2
Model 3	1	AC CURRENT L1	1	+01.2
	2			-P2.1

TL01	Line	Plate text	Qty	Location
Model 3	1	AC CURRENT L1	1	+01.2
	2			-P2.2
Model 3	1	AC VOLTAGE	2	+01.2
	2	SWITCH		-S5.1-2
Model 3	1	TIME COUNTER	1	+01.2
	2			-A30
Model 3	1	LOCAL / REMOTE	1	+01.1
	2			-S30
Model 3	1	SUPPLY UNIT	1	+01.1
	2	MAIN BREAKER CTRL		-S21
Model 3	1	EARTH FAULT	1	+01.1
	2	RESET		-S90
Model 3	1	EMERGENCY STOP RESET	1	+01.1
	2	SUPPLY TRIPPED		-S62
Model 3	1	SUPPLY UNIT	1	+01.1
	2	=01/CDP PANEL		-A59
Model 3	1	INVERTER UNIT	1	+1.01.1
	2	=1.01/CDP PANEL		-A49
Model 3	1	INVERTER UNIT	1	+1.01.1
	2	=1.02/CDP PANEL		-A49
Model 3	1	INVERTER UNIT	1	+1.01.1
	2	=1.03/CDP PANEL		-A49
Model 3	1	INVERTER UNIT	1	+1.01.1
	2	=1.04/CDP PANEL		-A49
Model 3	1	INVERTER UNIT	1	+1.01.1
	2	=1.05/CDP PANEL		-A49
Model 3	1	INVERTER UNIT	1	+1.01.1

TL01	Line	Plate text	Qty	Location
	2	=1.06/CDP PANEL		-A49
Model 3	1	INVERTER UNIT	1	+1.07.1
	2	=1.07/CDP PANEL		-A49
Model 3	1	INVERTER UNIT	1	+1.07.1
	2	=1.08/CDP PANEL		-A49
Model 3	1	INVERTER UNIT	1	+1.07.1
	2	=1.09/CDP PANEL		-A49
Model 3	1	INVERTER UNIT	1	+1.07.1
	2	=1.10/CDP PANEL		-A49
Model 3	1	INVERTER UNIT	1	+1.07.1
	2	=1.11/CDP PANEL		-A49
Model 3	1	INVERTER UNIT	1	+1.07.1
	2	=1.12/CDP PANEL		-A49

TL01	Line	Plate text	Qty	Location
Model 2	1	+2.01.1	1	+2.01.1
	2	=2.01		
	3	INV2.01		
Model 2	1	+2.01.1	1	+2.01.1
	2	=2.02		
	3	INV2.02		
Model 2	1	+2.01.1	1	+2.01.1
	2	=2.03		
	3	INV2.03		
Model 2	1	+2.01.1	1	+2.01.1
	2	=2.04		
	3	INV2.04		
Model 2	1	+2.01.1	1	+2.01.1
	2	=2.05		
	3	INV2.05		
Model 2	1	+2.01.1	1	+2.01.1
	2	=2.06		
	3	INV2.06		
Model 2	1	+2.07.1	1	+2.07.1
	2	=2.07		
	3	INV2.07		
Model 2	1	+2.07.1	1	+2.07.1
	2	=2.08		
	3	INV2.08		
Model 2	1	+2.07.1	1	+2.07.1
	2	=2.09		
	3	INV2.09		
Model 2	1	+2.07.1	1	+2.07.1
	2	=2.10		

TL01	Line	Plate text	Qty	Location
	3	INV2.10		
Model 2	1	+2.07.1	1	+2.07.1
	2	=2.11		
	3	INV2.11		
Model 2	1	+2.07.1	1	+2.07.1
	2	=2.12		
	3	INV2.12		
Model 2	1	+60.1	1	+60.1
	2	=60		
	3	DBU		
Model 3	1	INVERTER UNIT	1	+2.01.1
	2	=2.01/CDP PANEL		-A49
Model 3	1	INVERTER UNIT	1	+2.01.1
	2	=2.02/CDP PANEL		-A49
Model 3	1	INVERTER UNIT	1	+2.01.1
	2	=2.03/CDP PANEL		-A49
Model 3	1	INVERTER UNIT	1	+2.01.1
	2	=2.04/CDP PANEL		-A49
Model 3	1	INVERTER UNIT	1	+2.01.1
	2	=2.05/CDP PANEL		-A49
Model 3	1	INVERTER UNIT	1	+2.01.1
	2	=2.06/CDP PANEL		-A49
Model 3	1	INVERTER UNIT	1	+2.07.1
	2	=2.07/CDP PANEL		-A49
Model 3	1	INVERTER UNIT	1	+2.07.1
	2	=2.08/CDP PANEL		-A49

TL01	Line	Plate text	Qty	Location
Model 3	1	INVERTER UNIT	1	+2.07.1
	2	=2.09/CDP PANEL		-A49
Model 3	1	INVERTER UNIT	1	+2.07.1
	2	=2.10/CDP PANEL		-A49
Model 3	1	INVERTER UNIT	1	+2.07.1
	2	=2.11/CDP PANEL		-A49
Model 3	1	INVERTER UNIT	1	+2.07.1
	2	=2.12/CDP PANEL		-A49
Model 3	1	BRAKE UNIT	1	+60.1
	2	=60/CDP PANEL		-A49

Project: 3ABDC230674
Producer order nr.

注：503856681合同号下所有3ABDC项目只按此标牌表共加工1套

Material: AOBCA 1,5 Background color:White Text color:Black Font:Arial
Connection by: self-adhesive tape

Models: 21 Switch bay name sign 150 x 33 mm / char. height 6 mm / 35 char. per line / max 3 lines

	Line	Plate text	Qty	Location
Model 21	1 2 3	NO.1 VFD CABINET Of JACKING SYSTEM	1	+01.1 3ABDC230674 订单行号：600
Model 21	1 2 3	NO.2 VFD CABINET Of JACKING SYSTEM	1	+01.1 3ABDC230674 订单行号：700
Model 21	1 2 3	NO.1 VFD CABINET Of JACKING SYSTEM	1	+01.1 3ABDC230674 订单行号：800
Model 21	1 2 3	NO.2 VFD CABINET Of JACKING SYSTEM	1	+01.1 3ABDC230674 订单行号：900

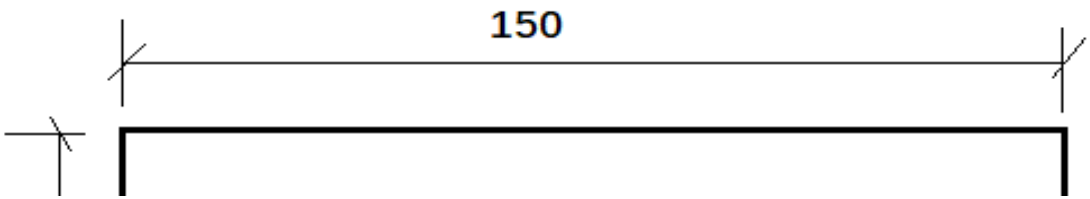

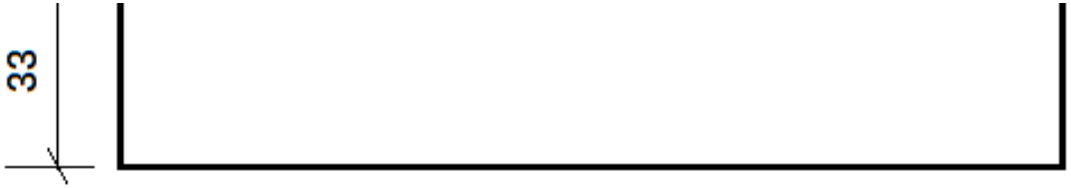
33

Project type	ACS880 Multidrives
Factory SAP order number	3ABDC230674
Project name	Zhaka Jack-up Lift System
Lineup name	Zhaka Jack-up Lift System-1
End customer	WMMP

P345812 / 29711 Used EPLAN version: P8 2023.0.3.19491

Cust. Doc. No.	Prep. Sky-Xin Zhang 02.08.2023	Title TITLE PAGE	Title page EAA	Item Des.	
Cust. Ref. No.	App.		SAP Doc. No.	= COMMON	
Customer WMMP	Project Zhaka Jack-up Lift System		EPLAN Doc. No. 3ABDC230674 - COMMON	+	
	Zhaka Jack-up Lift System-1		ABB Ref. No.	Rev. .1	Sheet 000A
			Resp. Dept.	Cont.	000C

Project interface

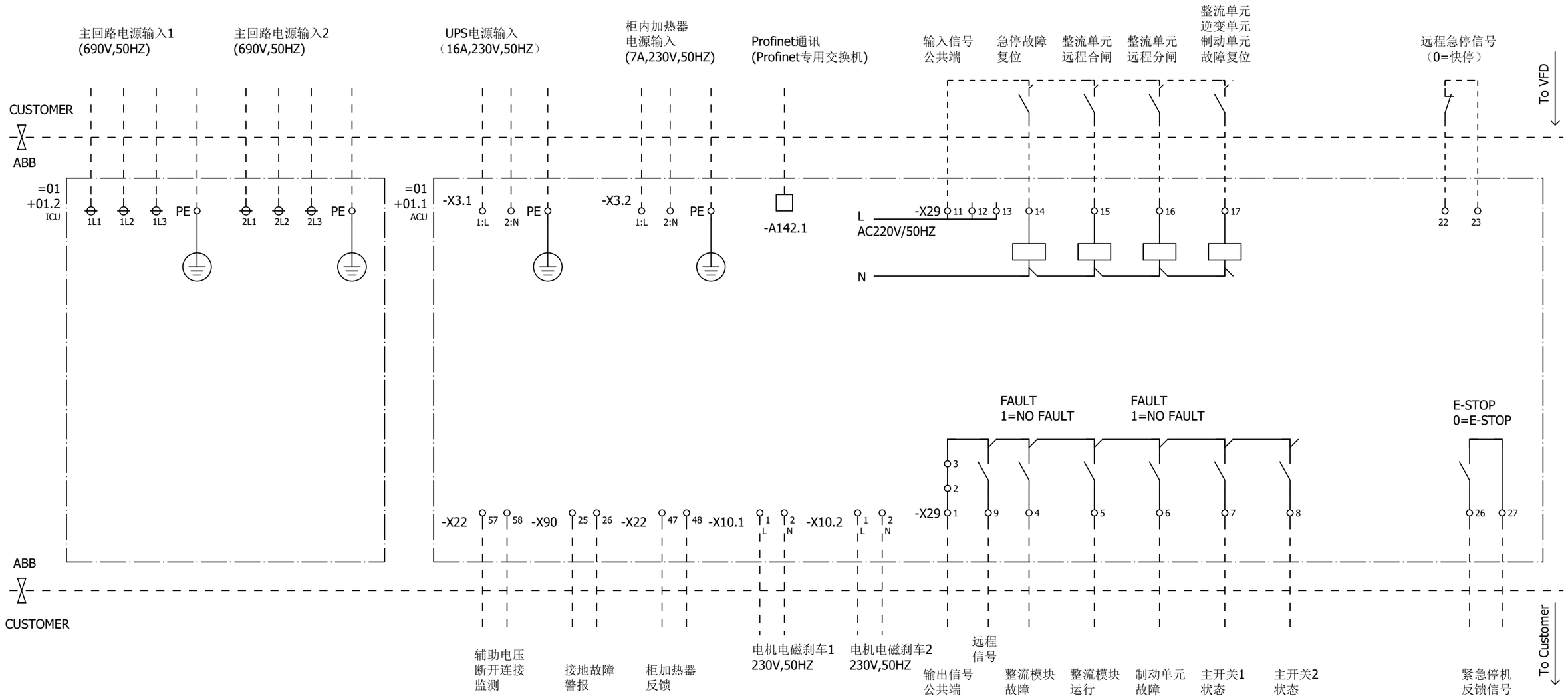

P345812 / 29711

Cust. Doc. No.	Prep. Sky-Xin Zhang 02.08.2023	Title INTERFACE	Circuit diagram EFS2	Item Des.
Cust. Ref. No.	App.		SAP Doc. No.	= COMMON
Customer WMMP	Project Zhaka Jack-up Lift System		EPLAN Doc. No. 3ABDC230674 - COMMON	+
	Zhaka Jack-up Lift System-1	ABB	ABB Ref. No.	Rev. .1 Sheet 100E
			Resp. Dept.	Cont. 100F

Project interface

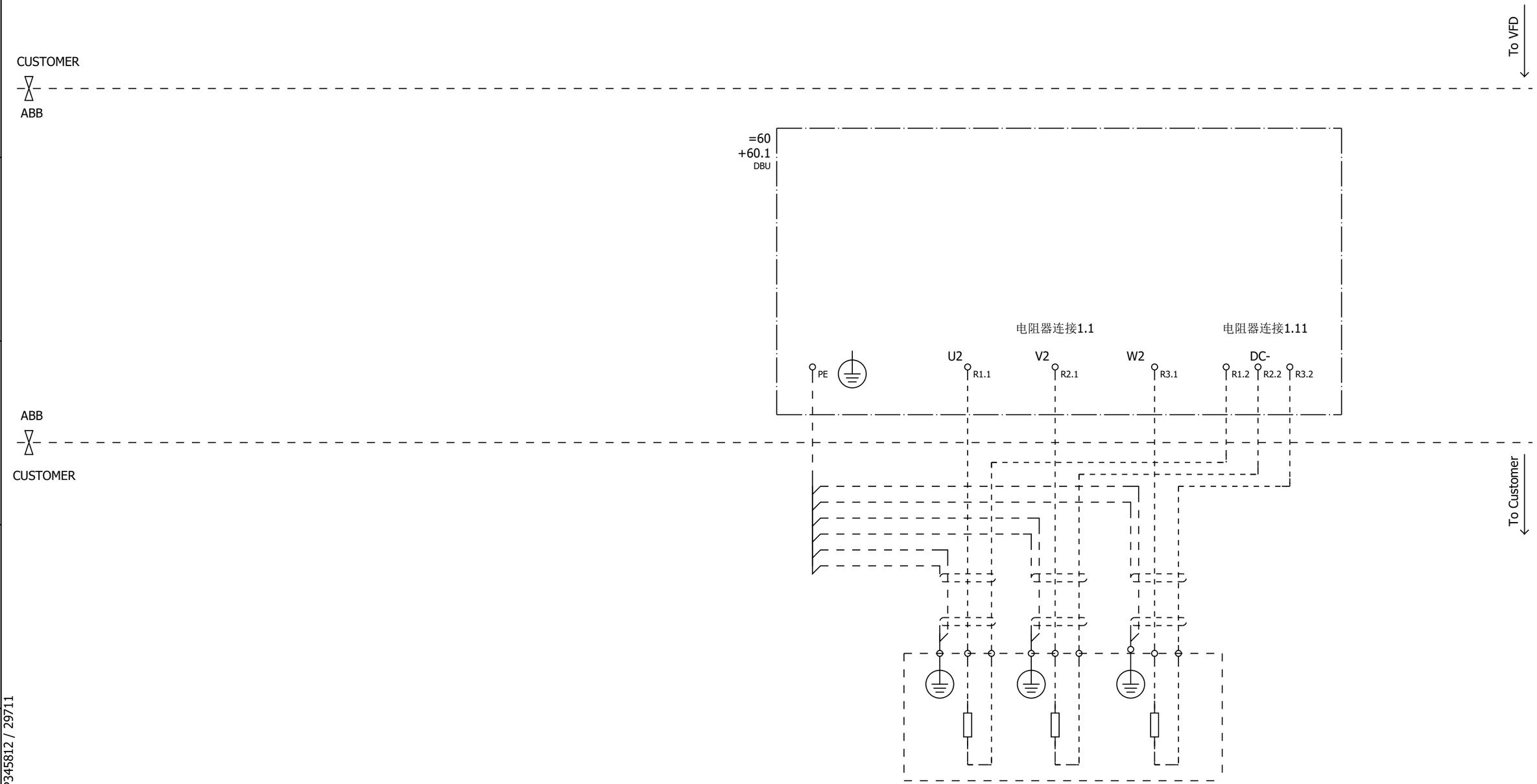

P345812 / 29711

Cust. Doc. No.	Prep. Sky-Xin Zhang 02.08.2023	Title INTERFACE	Circuit diagram EFS2	Item Des.
Cust. Ref. No.	App.		SAP Doc. No.	= COMMON
Customer WMMP	Project Zhaka Jack-up Lift System		EPLAN Doc. No. 3ABDC230674 - COMMON	+
	Zhaka Jack-up Lift System-1	ABB	ABB Ref. No.	Rev. .1 Sheet 100F
			Resp. Dept.	Cont. 100G

Project interface

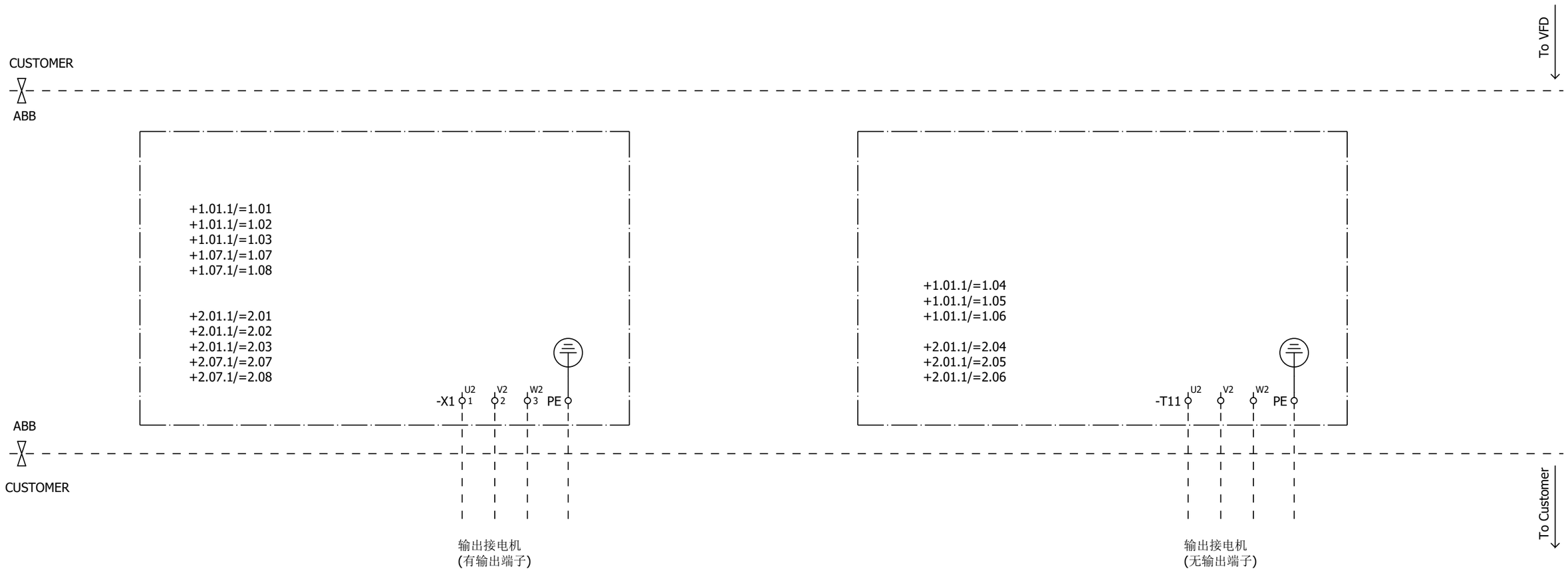

P345812 / 29711

Cust. Doc. No.	Prep. Sky-Xin Zhang 02.08.2023	Title INTERFACE	Circuit diagram EFS2	Item Des.	
Cust. Ref. No.	App.		SAP Doc. No.	= COMMON	
Customer WMMP	Project Zhaka Jack-up Lift System		EPLAN Doc. No. 3ABDC230674 - COMMON	+	
	Zhaka Jack-up Lift System-1	ABB	ABB Ref. No.	Rev. .1	Sheet 100G
			Resp. Dept.	Cont.	100H

Project interface

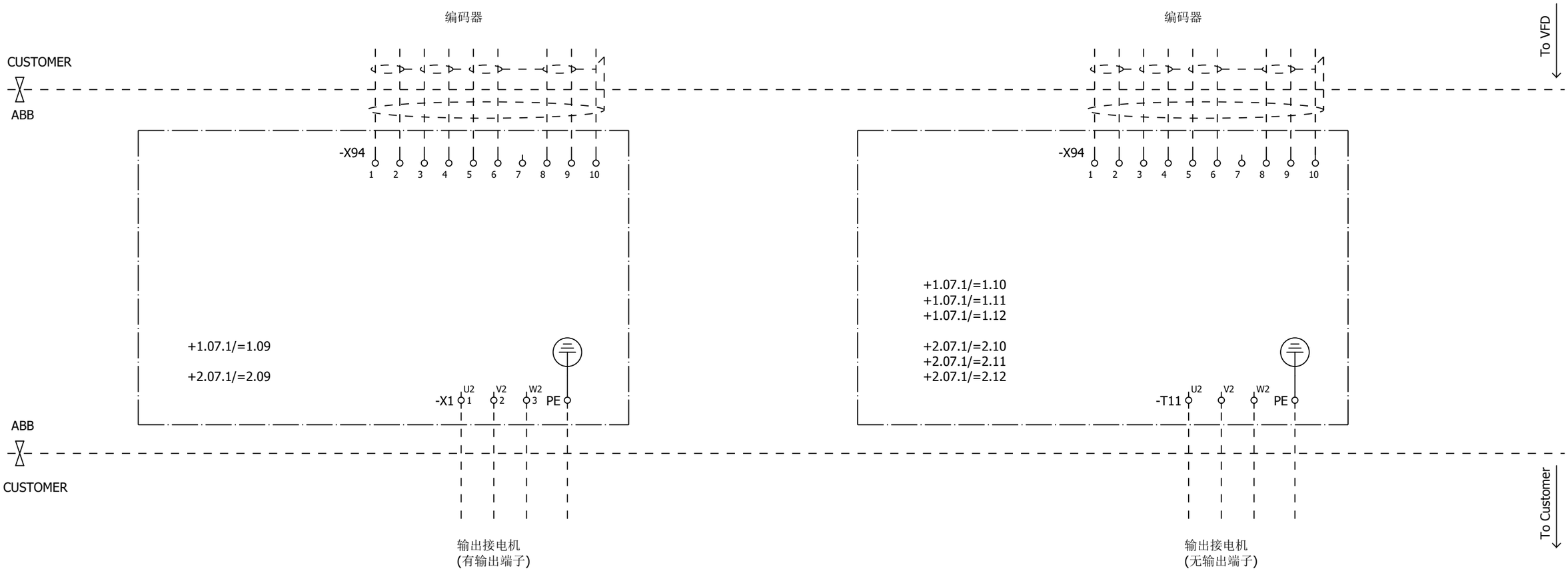

P345812 / 29711

Cust. Doc. No.	Prep. Sky-Xin Zhang 02.08.2023	Title INTERFACE	Circuit diagram EFS2	Item Des.	
Cust. Ref. No.	App.		SAP Doc. No.	= COMMON	
Customer WMMP	Project Zhaka Jack-up Lift System		EPLAN Doc. No. 3ABDC230674 - COMMON	+	
	Zhaka Jack-up Lift System-1	ABB	ABB Ref. No.	Rev. .1	Sheet 100H
			Resp. Dept.	Cont. 260a	

GENERAL/RELAY COIL, WITH PROTECTIVE CIRCUIT DIODE AND R+LED

GENERAL/RELAY COIL

COIL WITH PICK-UP DELAY

COIL WITH OFF-DELAY

NO CONTACT

NC CONTACT

CHANGE OVER CONTACT

NO CONTACT, WITH CLOSING DELAY

TWO NO CONTACTS ONE INPUT, TWO OUTPUTS

TWO CONNECTED CHANGE OVER CONTACTS

POWER NO CONTACT OF A CONTACTOR

PUSH BUTTON WITH NO CONTACT

PUSH BUTTON WITH NC CONTACT

NO SWITCH, OPERATED BY TURNING, 2 POSITIONS

LIMIT SWITCH NC CONTACT MECHANICALLY OPERATED

NC SWITCH, TEMPERATURE OPERATED

EMERGENCY STOP PUSH BUTTON

DISCONNECT SWITCH, THREE-POLE

SWITCH DISCONNECTOR WITH FUSES, THREE-POLE

FUSE

FUSE DISCONNECTOR

CIRCUIT BREAKER

MOTOR OVERLOAD SWITCH WITH SWITCH MECHANISM

COMMON MODE FILTER FOR HIGH FREQUENCY CURRENTS

PROTECTIVE EARTH CONNECTED TO FRAME

PROTECTIVE EARTH CONNECTED TO TERMINAL / PE BUSBAR

FUNCTIONAL EARTHING CONNECTED TO TERMINAL

FUNCTIONAL BONDING TO FRAME

LIGHT

INDUCTOR

CAPACITOR

RESISTOR

POWER RESISTOR WITH FUSE

PHASE SELECTING SWITCH

TRANSFORMER

EMC FILTER

TERMINAL, FOUR POLE

PLUG AND SOCKET TERMINAL BLOCK WITH 4 CONNECTION POINTS

FEMALE AND MALE PLUG

AMPERE METER

CURRENT TRANSFORMER

VOLTAGE METER

WIRE TERMINATION, INSULATED

SHIELDED CABLE

THERMAL OPERATION

DISCONNECT

DISCONNECT, CAN BE OPERATED WHILE NOMINAL CURRENT IS APPLIED

BREAKER, SHORTCIRCUIT BREAKING CAPABILITY

P345812 / 29711

Cust. Doc. No.	Prep. Sky-Xin Zhang 02.08.2023	Title Symbol Overview	Title page EAA
Cust. Ref. No.	App.		SAP Doc. No.
Customer WMMP	Project Zhaka Jack-up Lift System		EPLAN Doc. No. 3ABDC230674 - COMMON
	Zhaka Jack-up Lift System-1		ABB Ref. No. / Resp. Dept.

Item Des. = COMMON +

Rev. .1 Sheet 300A

Cont. 901

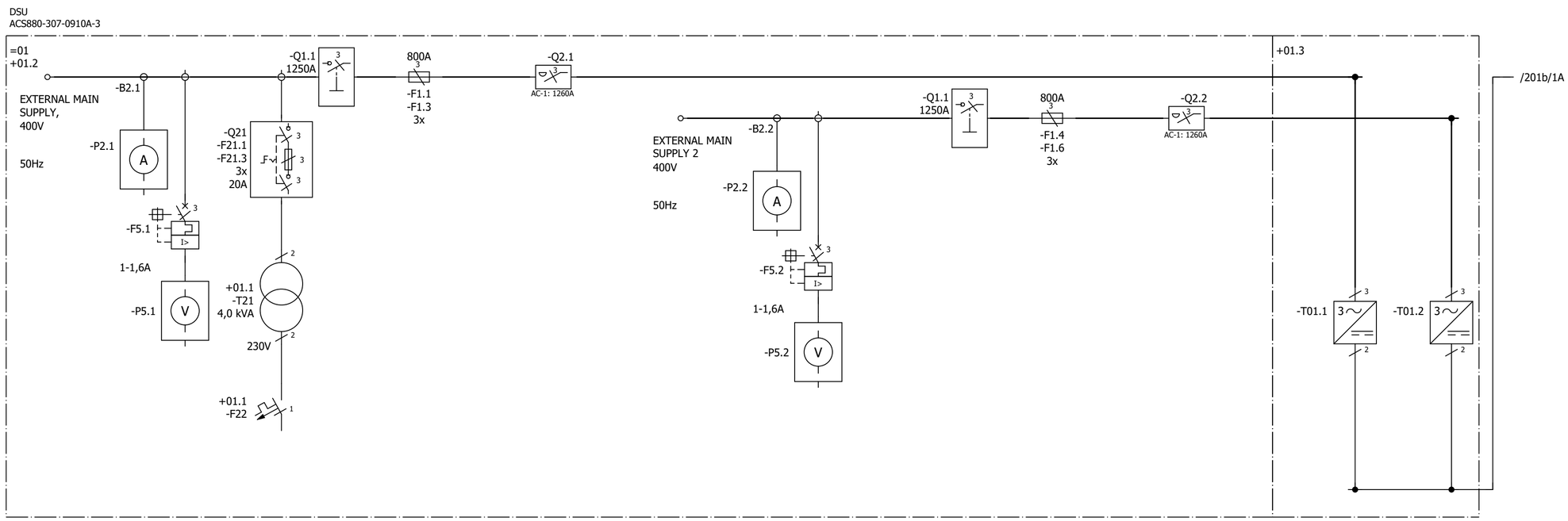

Cust. Doc. No.	Prep. Sky-Xin Zhang 02.08.2023	Title OVERVIEW DIAGRAM	Overview diagram EFA
Cust. Ref. No.	App.		SAP Doc. No.
Customer WMMP	Project Zhaka Jack-up Lift System		EPLAN Doc. No.
	Zhaka Jack-up Lift System-1	ABB	ABB Ref. No. 3ABDC230674
			Resp. Dept.

Item Des.
= COMMON
+

Rev. .1 Sheet 201a
No. of Sheets 5

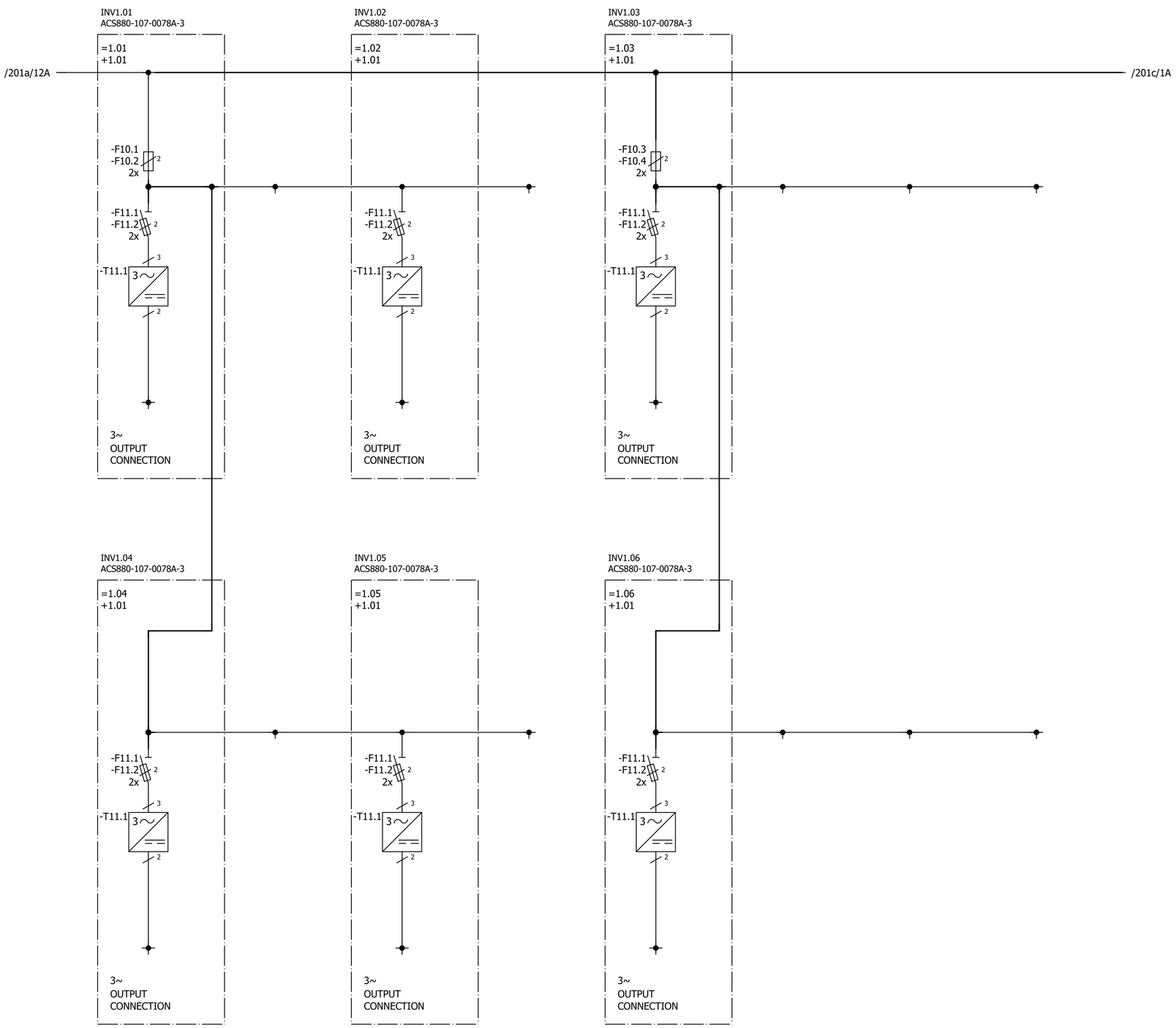

Cust. Doc. No.	Prep. Sky-Xin Zhang 02.08.2023	Title OVERVIEW DIAGRAM	Overview diagram EFA
Cust. Ref. No.	App.		SAP Doc. No.
Customer WMMP	Project Zhaka Jack-up Lift System Zhaka Jack-up Lift System-1		EPLAN Doc. No.
			ABB Ref. No. 3ABDC230674
			Resp. Dept.

Item Des.
= COMMON
+

Rev. .1 Sheet 201b
No. of Sheets 5

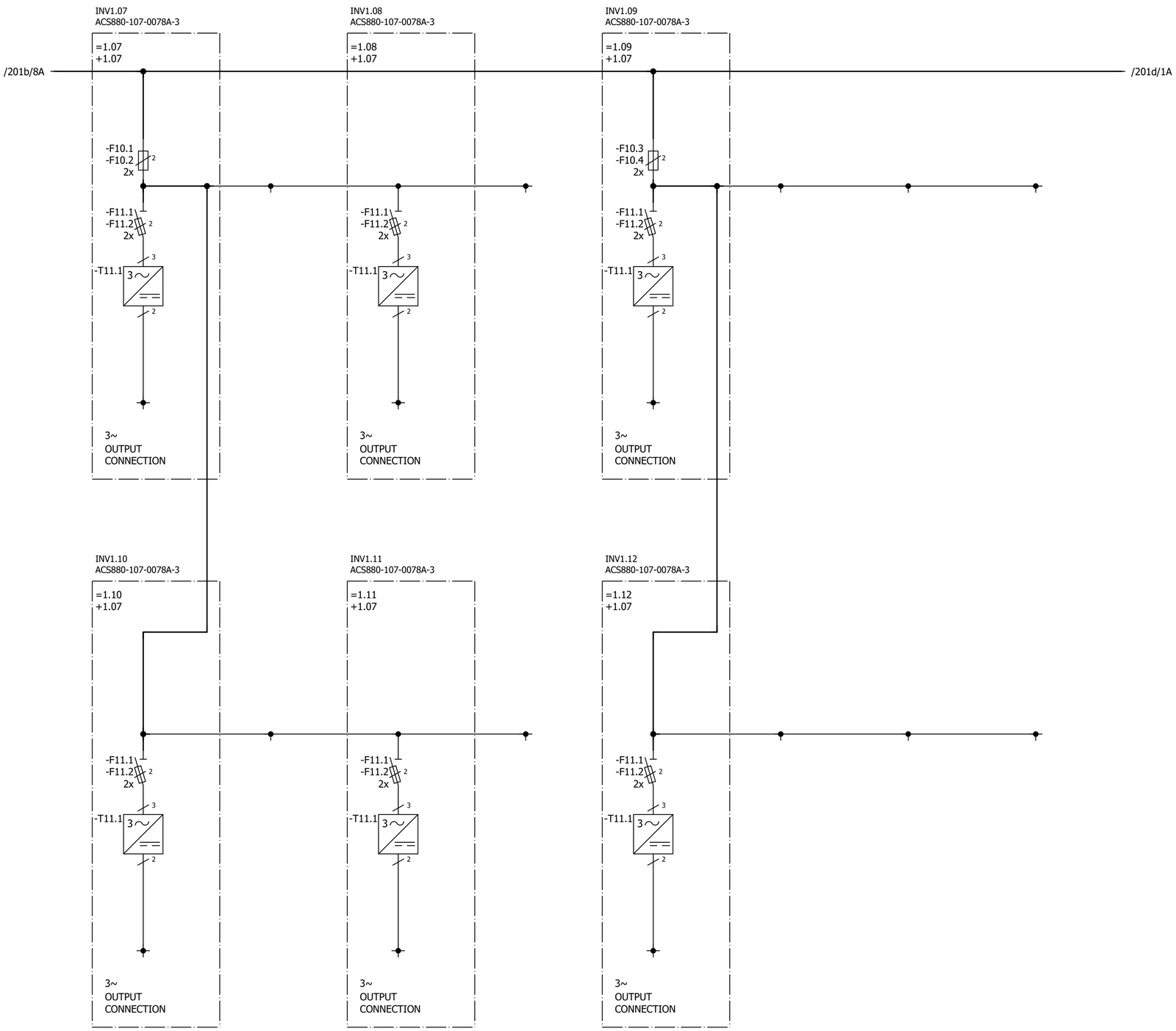

Cust. Doc. No.	Prep. Sky-Xin Zhang 02.08.2023	Title OVERVIEW DIAGRAM	Overview diagram EFA
Cust. Ref. No.	App.		SAP Doc. No.
Customer WMMP	Project Zhaka Jack-up Lift System Zhaka Jack-up Lift System-1		EPLAN Doc. No.
			ABB Ref. No. 3ABDC230674
			Resp. Dept.

Item Des.
= COMMON
+

Rev. .1 Sheet 201c
No. of Sheets 5

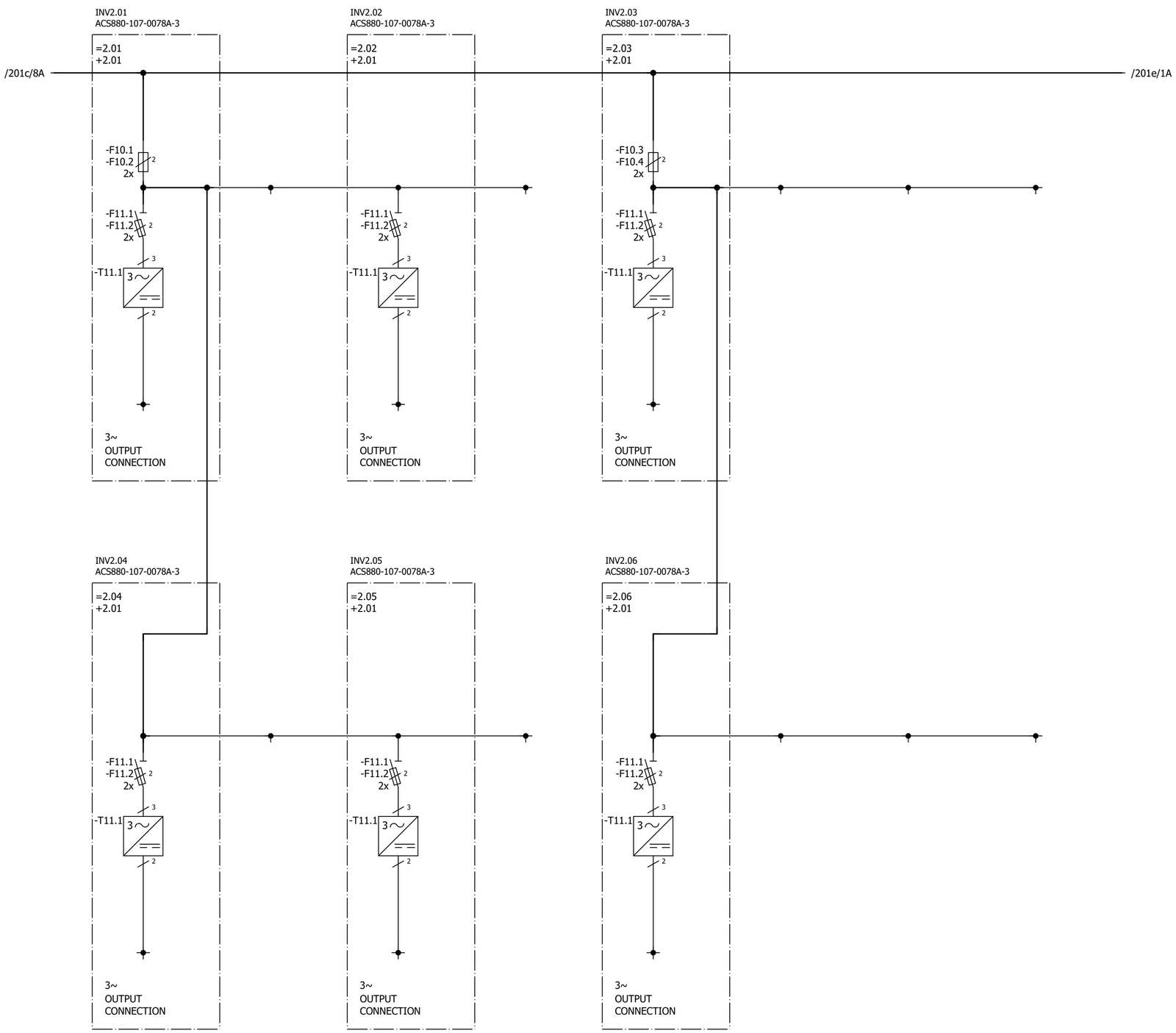

Cust. Doc. No.	Prep. Sky-Xin Zhang 02.08.2023	Title OVERVIEW DIAGRAM	Overview diagram EFA
Cust. Ref. No.	App.		SAP Doc. No.
Customer WMMP	Project Zhaka Jack-up Lift System Zhaka Jack-up Lift System-1		EPLAN Doc. No.
			ABB Ref. No. 3ABDC230674
			Resp. Dept.

Item Des.
= COMMON
+

Rev. .1 Sheet 201d
No. of Sheets 5

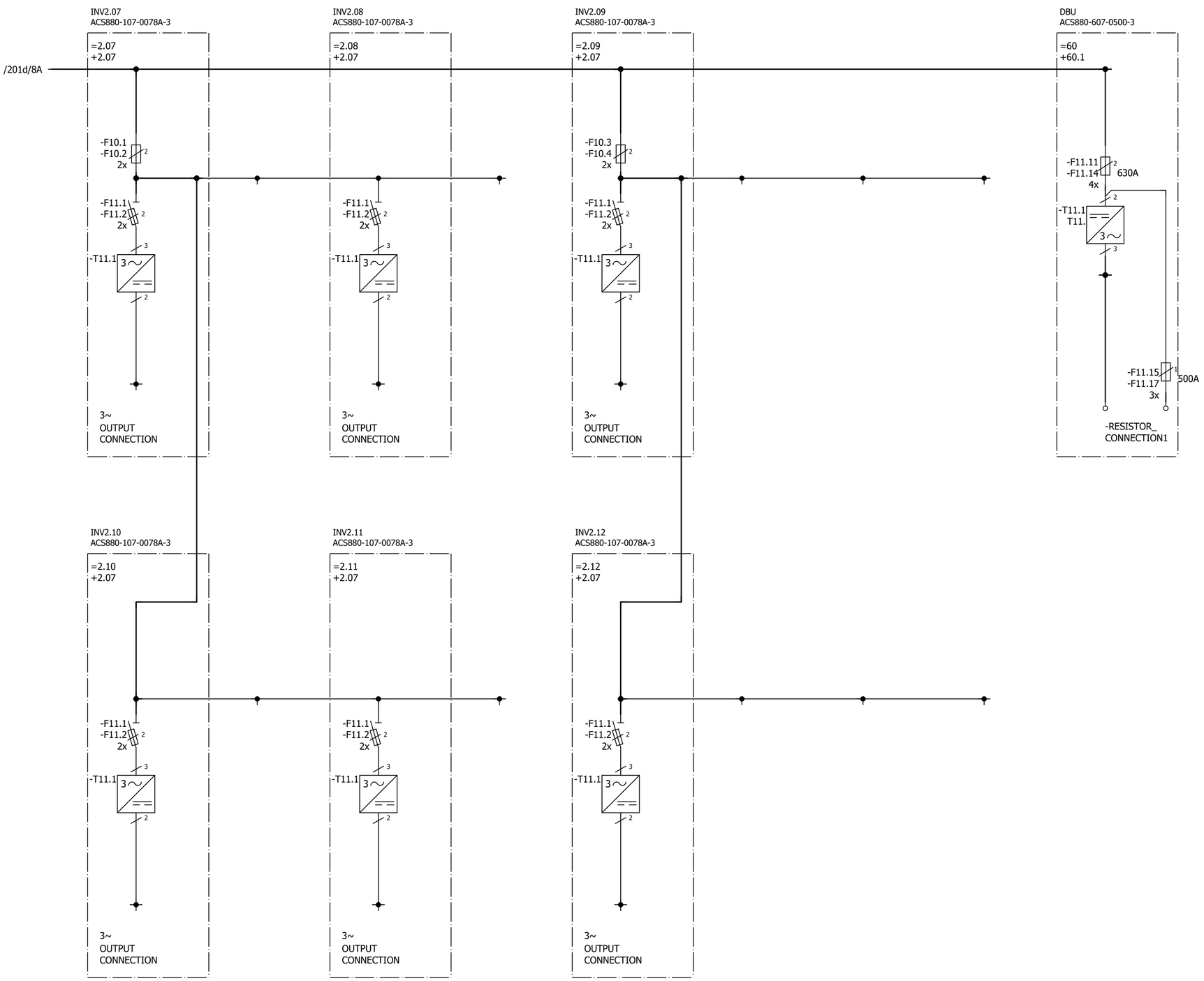

Cust. Doc. No.	Prep. Sky-Xin Zhang 02.08.2023	Title OVERVIEW DIAGRAM	Overview diagram EFA
Cust. Ref. No.	App.		SAP Doc. No.
Customer WMMP	Project Zhaka Jack-up Lift System Zhaka Jack-up Lift System-1		EPLAN Doc. No.
			ABB Ref. No. 3ABDC230674
			Resp. Dept.

Item Des.
= COMMON
+

Rev. .1 Sheet 201e
No. of Sheets 5

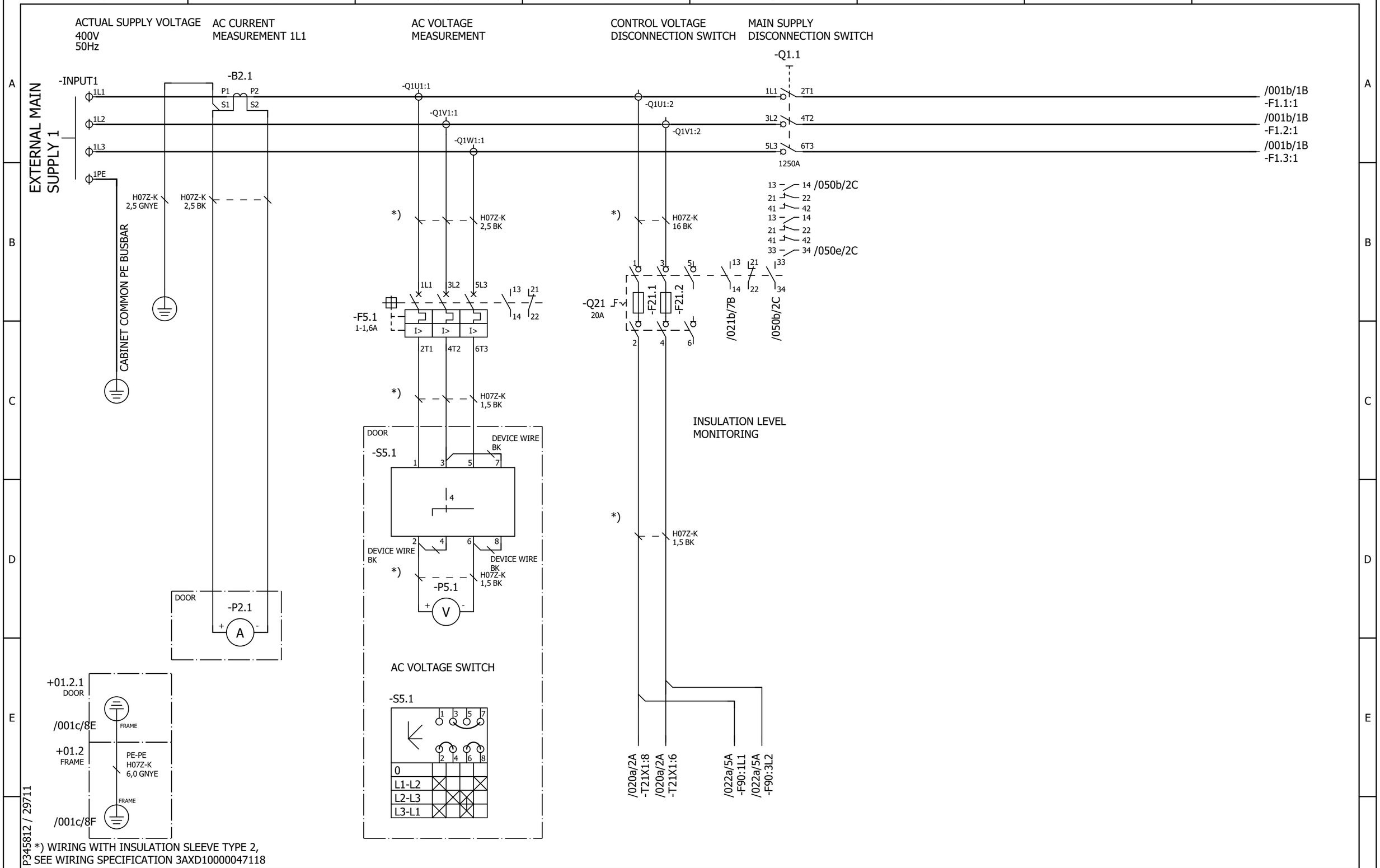

*) WIRING WITH INSULATION SLEEVE TYPE 2,
SEE WIRING SPECIFICATION 3AXD10000047118

Cust. Doc. No.	Prep. Sky-Xin Zhang 02.08.2023	Title MAIN CIRCUIT	Circuit diagram EFS2	Item Des.	
Cust. Ref. No.	App.	DSU	SAP Doc. No.	= 01	
Customer WMMP	Project Zhaka Jack-up Lift System	ACS880-307-0910A-3	EPLAN Doc. No. 3ABDC230674 - 01	+ 01.2	
	Zhaka Jack-up Lift System-1	400V 50 Hz IP22	ABB Ref. No.	Rev. .1	Sheet 001a
			Resp. Dept.	Cont.	001b

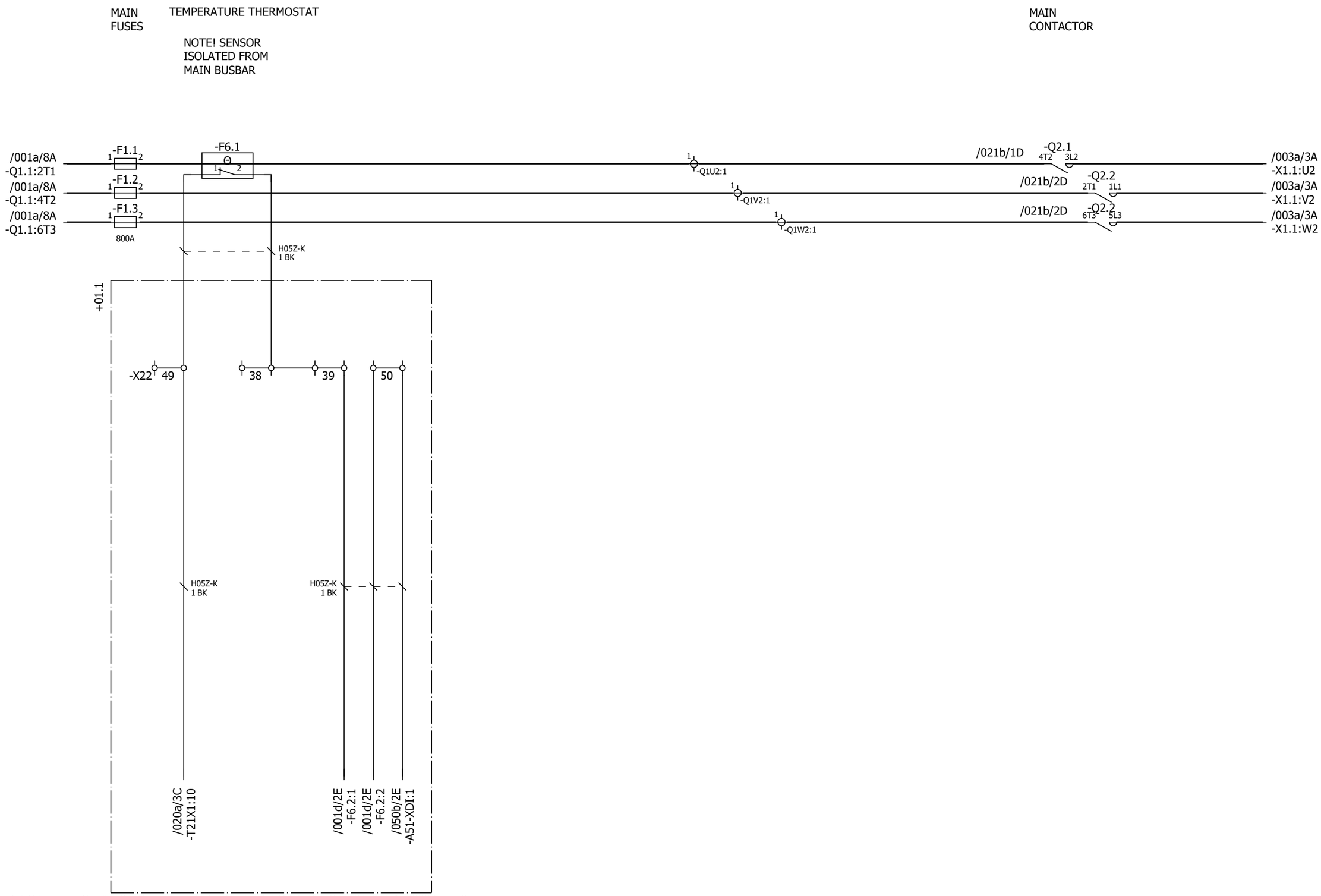

P345812 / 29711

*) WIRING WITH INSULATION SLEEVE TYPE 2, SEE WIRING SPECIFICATION 3AXD10000047118

Cust. Doc. No.	Prep. Sky-Xin Zhang 02.08.2023	Title MAIN CIRCUIT DSU ACS880-307-0910A-3 400V 50 Hz IP22	Circuit diagram EFS2
Cust. Ref. No.	App.		SAP Doc. No.
Customer WMMP	Project Zhaka Jack-up Lift System Zhaka Jack-up Lift System-1		EPLAN Doc. No. 3ABDC230674 - 01
			ABB Ref. No.
			Resp. Dept.

Item Des. = 01 + 01.2

Rev. .1 Sheet 001b

Cont. 001c

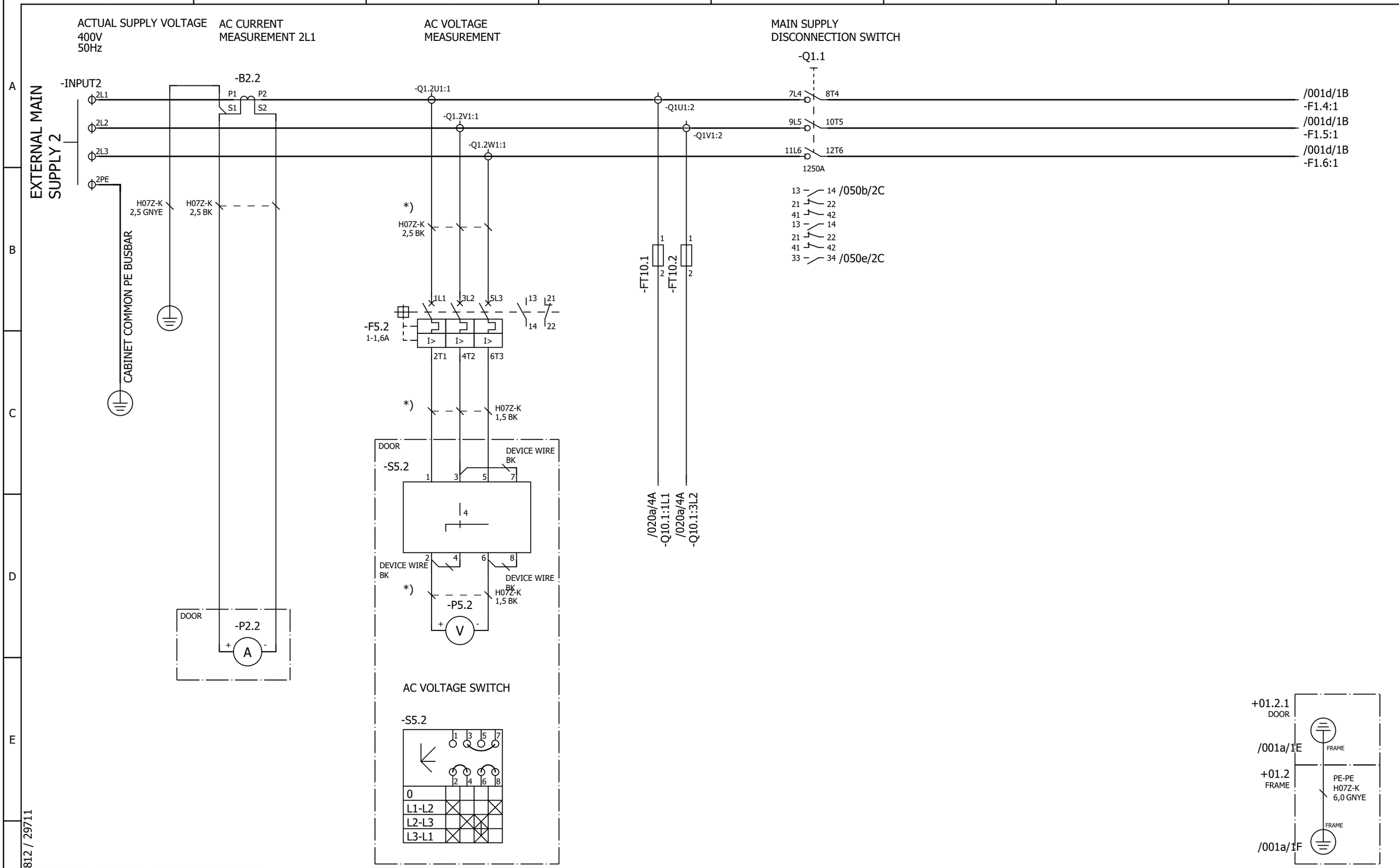

P345812 / 29711

*) WIRING WITH INSULATION SLEEVE TYPE 2,
SEE WIRING SPECIFICATION 3AXD10000047118

Cust. Doc. No.	Prep. Sky-Xin Zhang 02.08.2023	Title MAIN CIRCUIT	Circuit diagram EFS2	Item Des.	
Cust. Ref. No.	App.	DSU	SAP Doc. No.	= 01	
Customer WMMP	Project Zhaka Jack-up Lift System	ACS880-307-0910A-3	EPLAN Doc. No. 3ABDC230674 - 01	+ 01.2	
	Zhaka Jack-up Lift System-1	400V 50 Hz IP22	ABB Ref. No.	Rev. .1	Sheet 001c
			Resp. Dept.	Cont.	001d

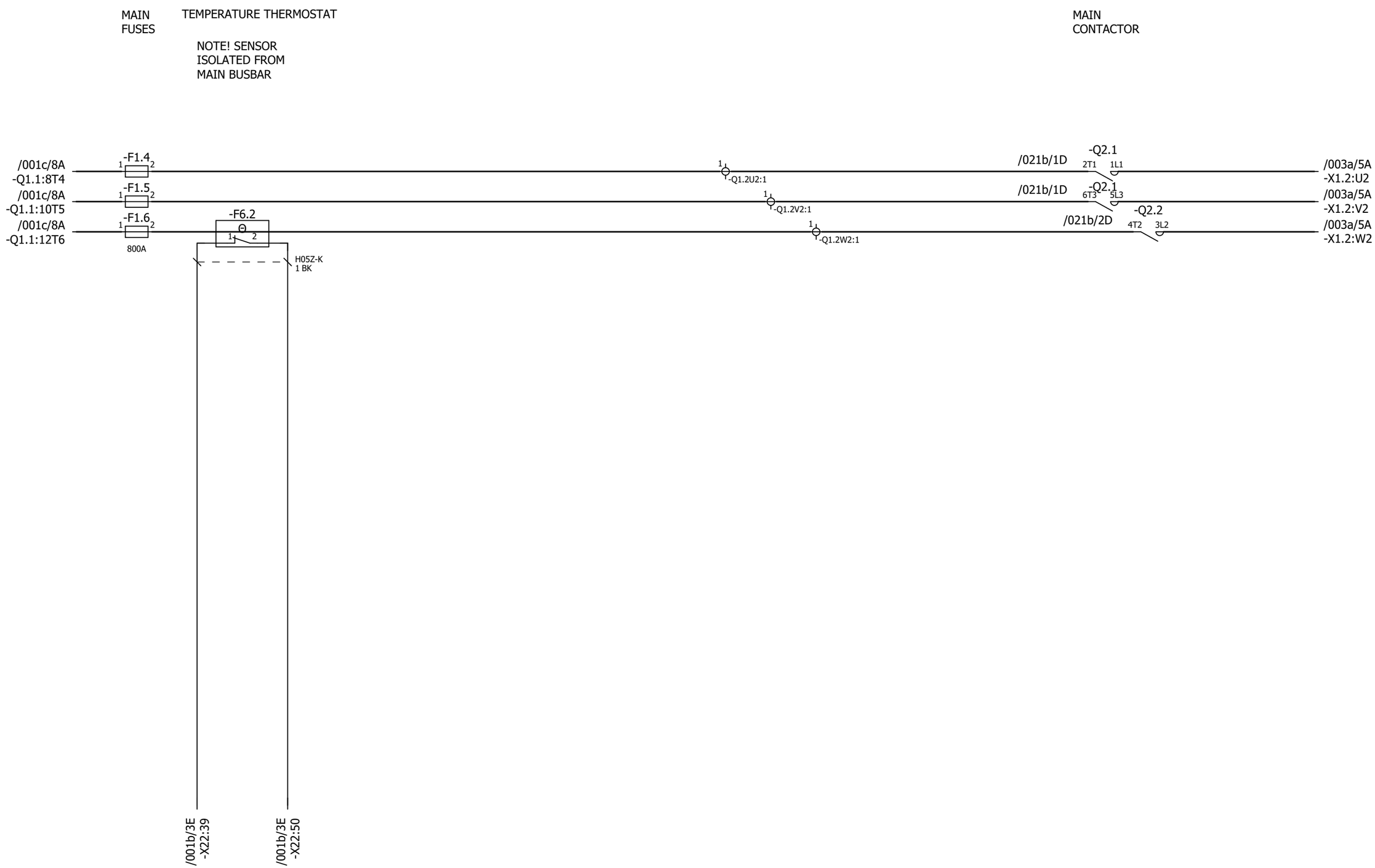

P345812 / 29711

*) WIRING WITH INSULATION SLEEVE TYPE 2, SEE WIRING SPECIFICATION 3AXD10000047118

Cust. Doc. No.	Prep. Sky-Xin Zhang 02.08.2023	Title MAIN CIRCUIT DSU ACS880-307-0910A-3 400V 50 Hz IP22	Circuit diagram EFS2
Cust. Ref. No.	App.		SAP Doc. No.
Customer WMMP	Project Zhaka Jack-up Lift System Zhaka Jack-up Lift System-1		EPLAN Doc. No. 3ABDC230674 - 01
			ABB Ref. No.
			Resp. Dept.

Item Des.
= 01
+ 01.2

Rev. .1 Sheet 001d
Cont. 003a

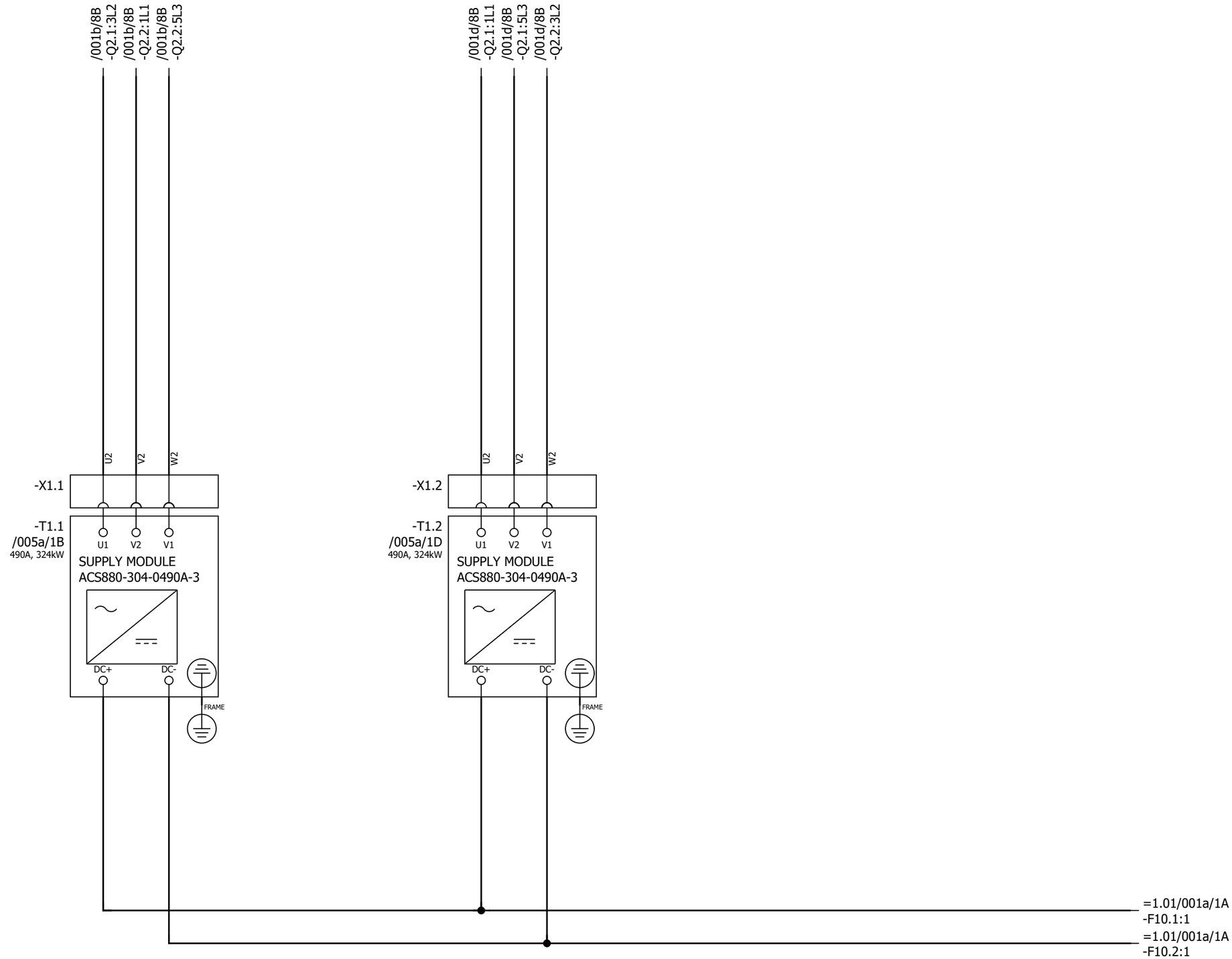

P345812 / 29711

Cust. Doc. No.	Prep. Sky-Xin Zhang 02.08.2023	Title MAIN CIRCUIT	Circuit diagram EFS2	Item Des.	
Cust. Ref. No.	App.	DSU	SAP Doc. No.	= 01	
Customer WMMP	Project Zhaka Jack-up Lift System	ACS880-307-0910A-3	EPLAN Doc. No. 3ABDC230674 - 01	+ 01.3	
	Zhaka Jack-up Lift System-1	400V 50 Hz IP22	ABB Ref. No.	Rev. .1	Sheet 003a
			Resp. Dept.	Cont.	005a

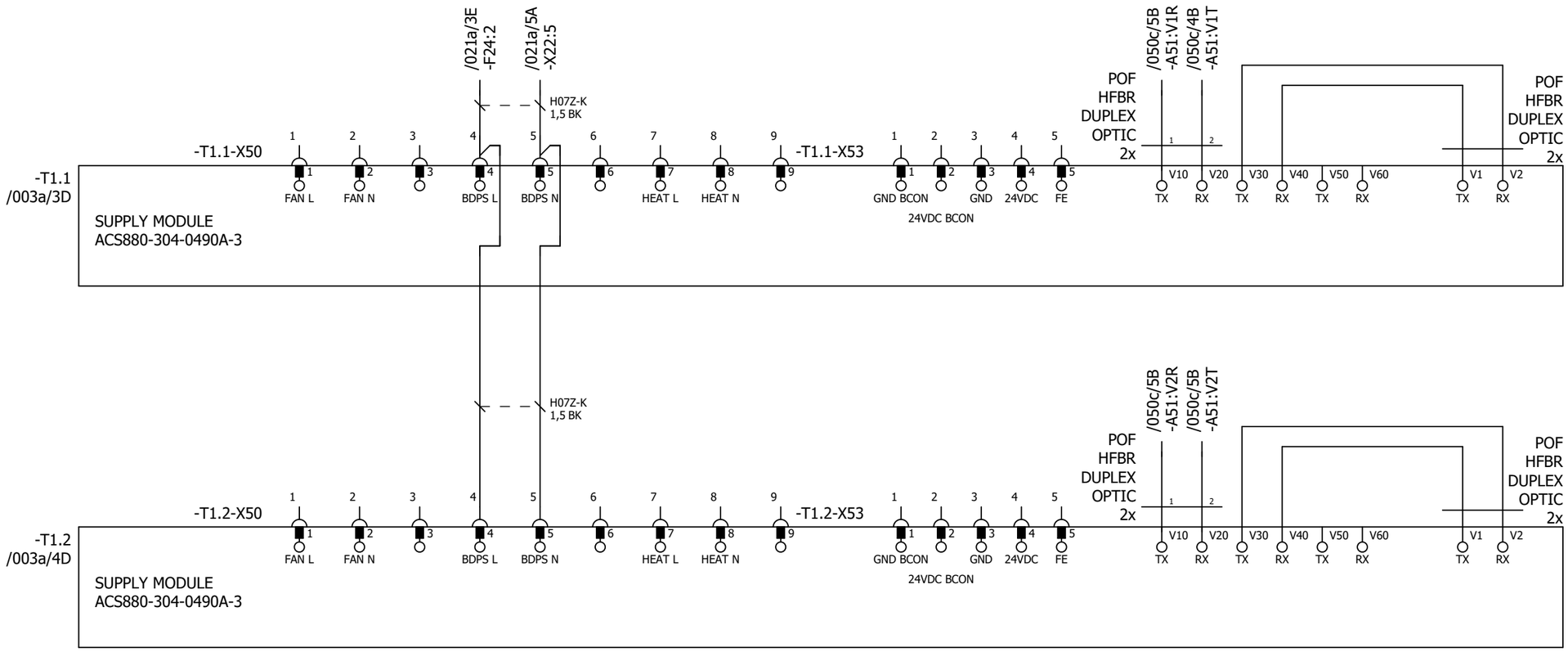

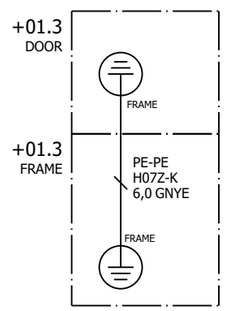

P345812 / 29711

Cust. Doc. No.	Prep. Sky-Xin Zhang 02.08.2023	Title MODULE CONTROL CONNECTIONS	Circuit diagram EFS2	Item Des.	
Cust. Ref. No.	App.	DSU	SAP Doc. No.	= 01	
Customer WMMP	Project Zhaka Jack-up Lift System	ACS880-307-0910A-3	EPLAN Doc. No. 3ABDC230674 - 01	+ 01.3	
	Zhaka Jack-up Lift System-1	400V 50 Hz IP22 ABB	ABB Ref. No.	Rev. .1	Sheet 005a
			Resp. Dept.	Cont.	020a

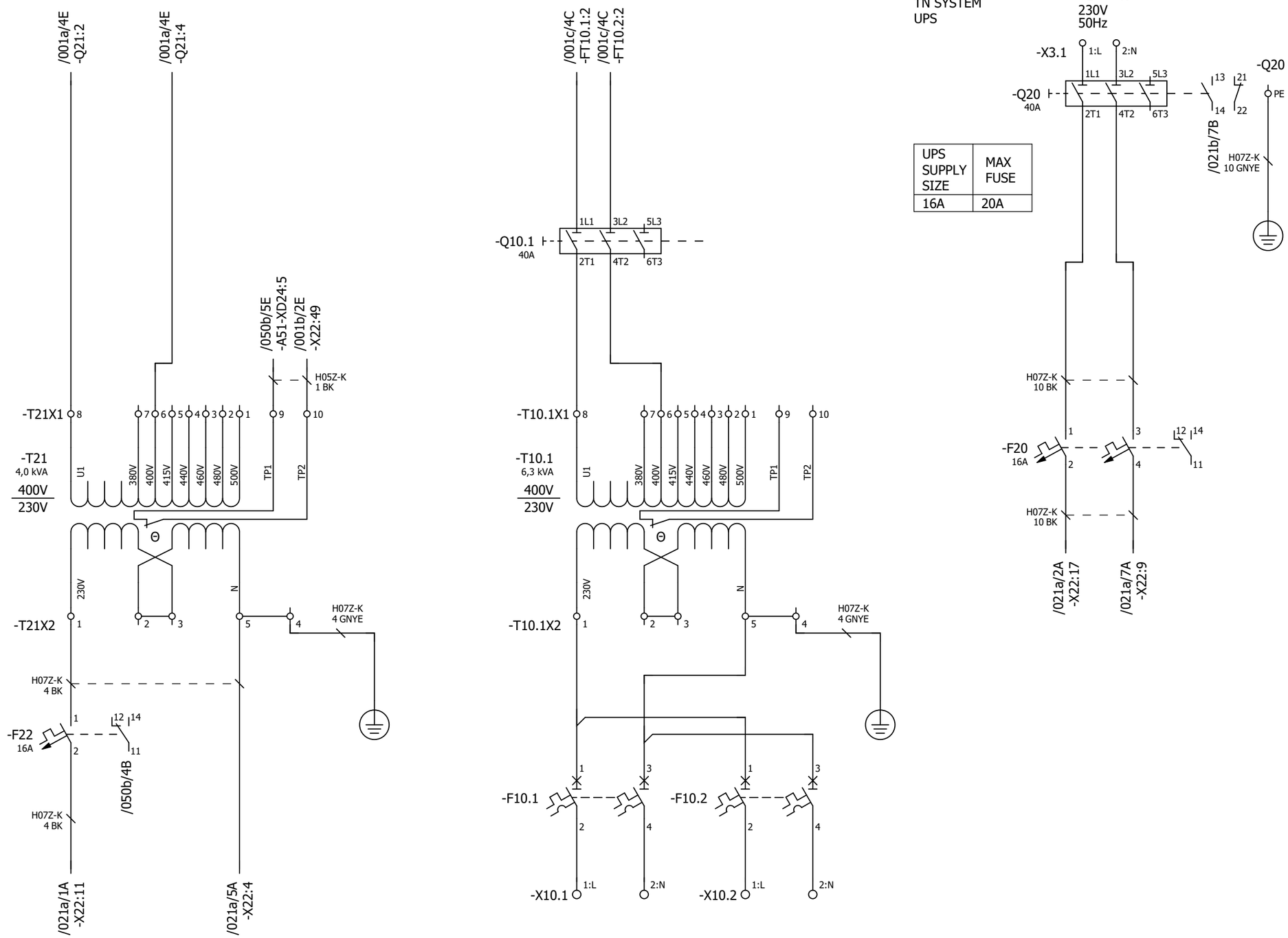

UPS SUPPLY SIZE	MAX FUSE
16A	20A

P345812 / 29711

*) WIRING WITH INSULATION SLEEVE (IS) SEE NOTE 1

1) NOTE TYPE 2 SEE WIRING SPECIFICATION 3AXD10000047118

Cust. Doc. No.	Prep. Sky-Xin Zhang 02.08.2023	Title AUXILIARY VOLTAGE DSU ACS880-307-0910A-3 400V 50 Hz IP22	Circuit diagram EFS2
Cust. Ref. No.	App.		SAP Doc. No.
Customer WMMP	Project Zhaka Jack-up Lift System Zhaka Jack-up Lift System-1		EPLAN Doc. No. 3ABDC230674 - 01
			ABB Ref. No.
			Resp. Dept.

Item Des.
= 01
+ 01.1

Rev. .1 Sheet 020a
Cont. 021a

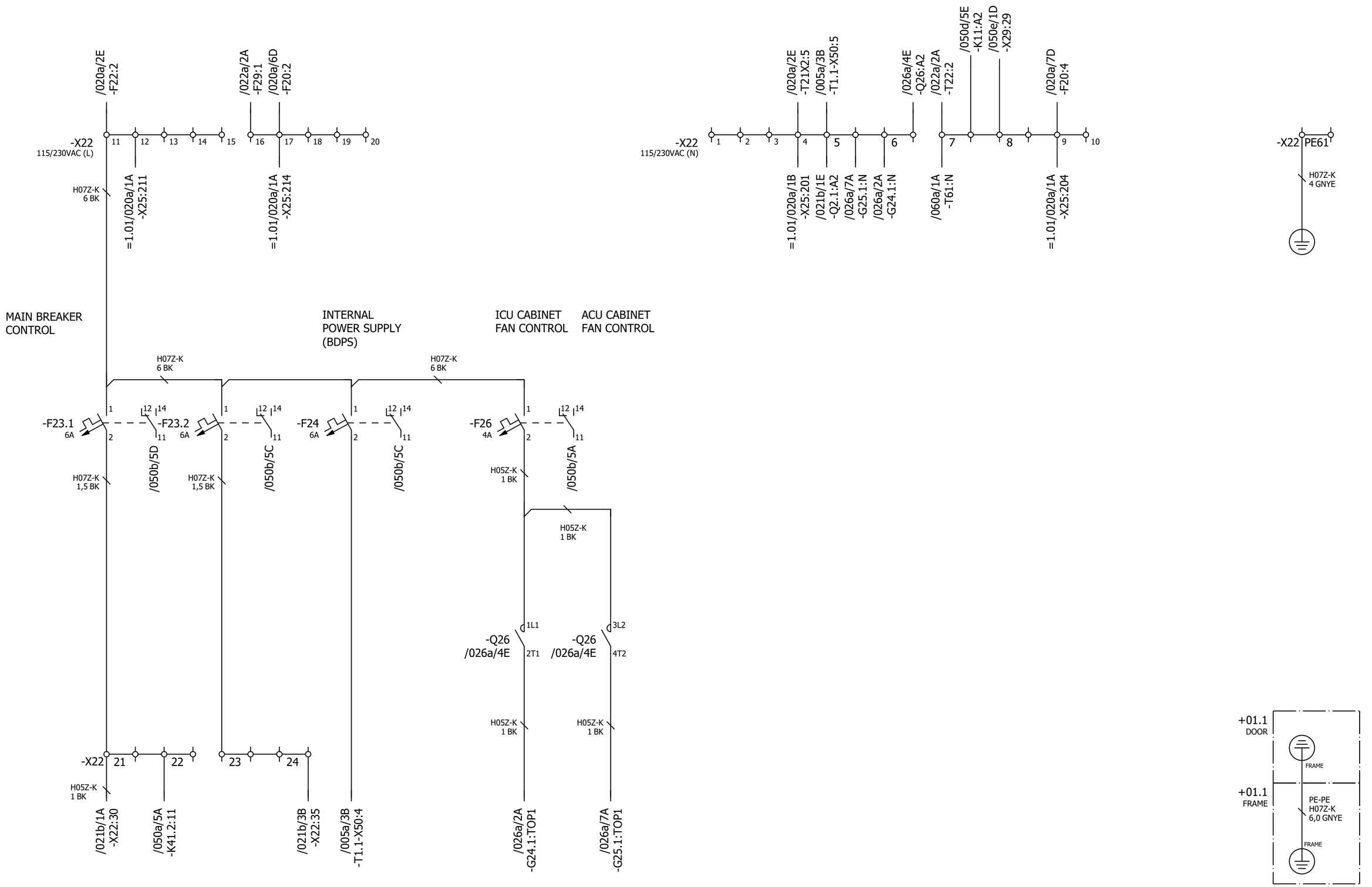

P345812 / 29711

Cust. Doc. No.	Prep. Sky-Xin Zhang 02.08.2023	Title AUXILIARY VOLTAGE	Circuit diagram EFS2	Item Des.	
Cust. Ref. No.	App.	DSU	SAP Doc. No.	= 01	
Customer WMMP	Project Zhaka Jack-up Lift System	ACS880-307-0910A-3	EPLAN Doc. No. 3ABDC230674 - 01	+ 01.1	
	Zhaka Jack-up Lift System-1	400V 50 Hz IP22	ABB Ref. No.	Rev. .1	Sheet 021a
			Resp. Dept.	Cont.	021b

AUXILIARY VOLTAGE
DISCONNECT
MONITORING

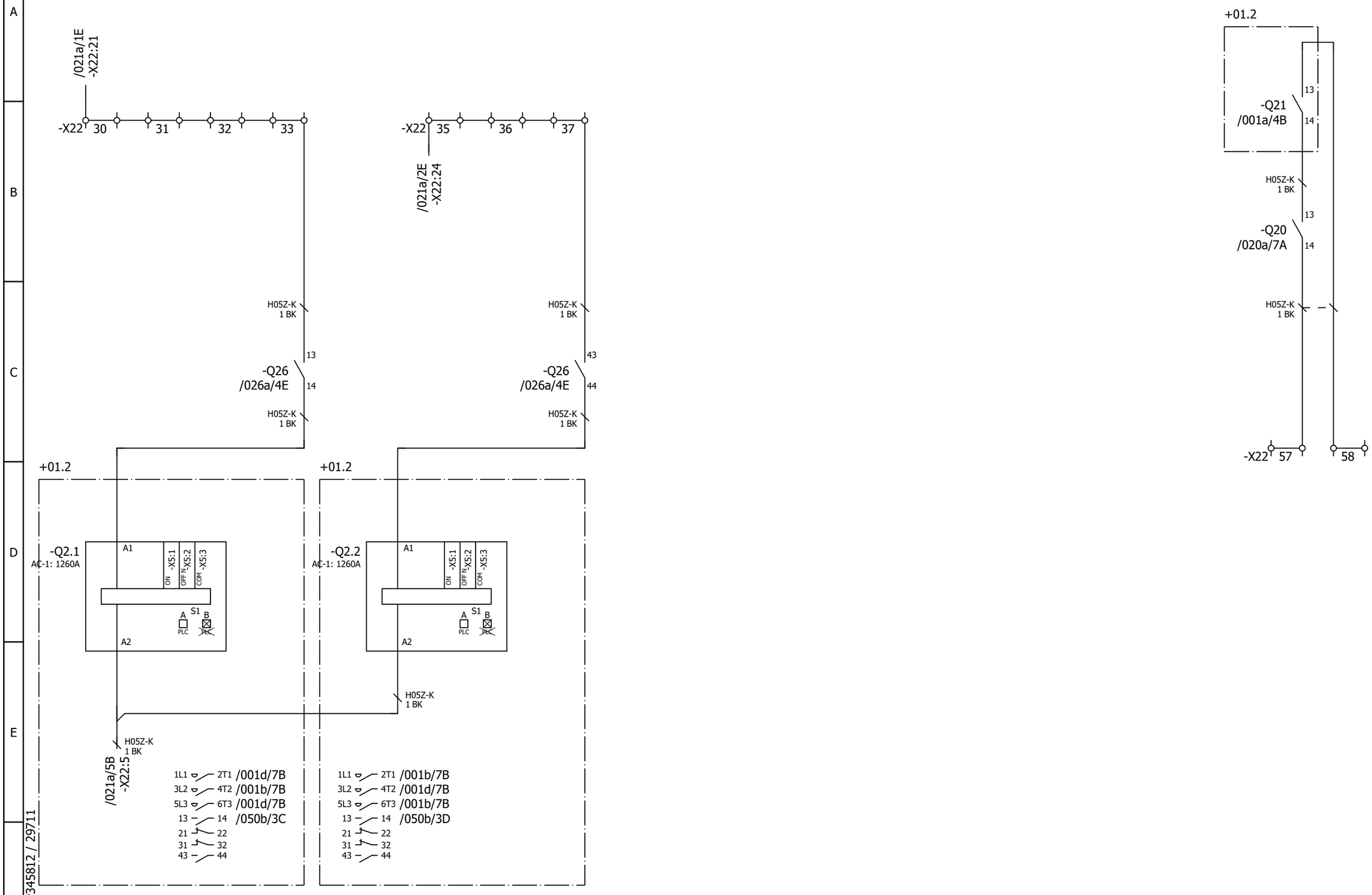

Cust. Doc. No.	Prep. Sky-Xin Zhang 02.08.2023	Title AUXILIARY VOLTAGE	Circuit diagram EFS2	Item Des.
Cust. Ref. No.	App.	DSU	SAP Doc. No.	= 01
Customer WMMP	Project Zhaka Jack-up Lift System	ACS880-307-0910A-3	EPLAN Doc. No. 3ABDC230674 - 01	+ 01.1
	Zhaka Jack-up Lift System-1	400V 50 Hz IP22	ABB Ref. No.	Rev. .1 Sheet 021b
			Resp. Dept.	Cont. 022a

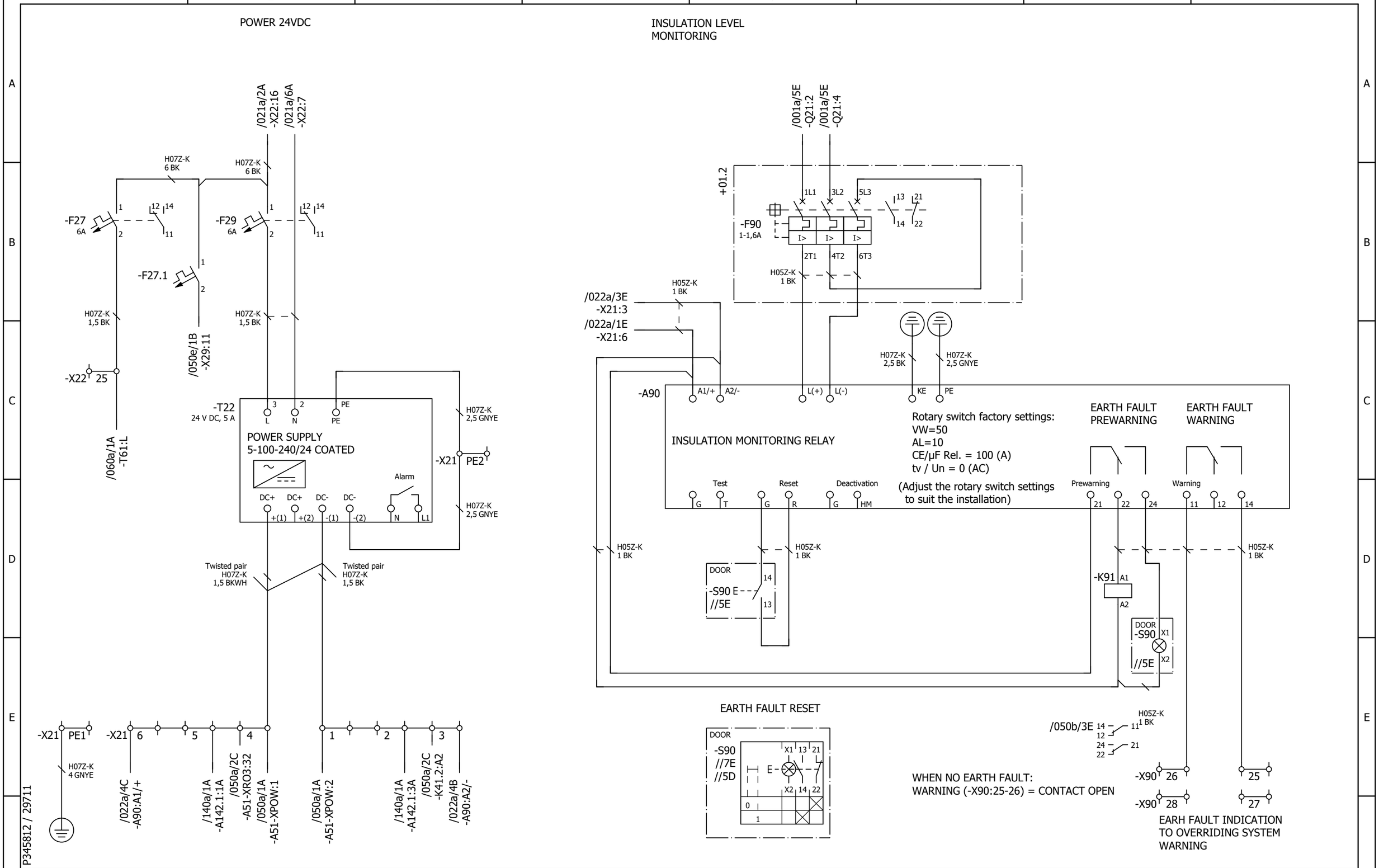

Cust. Doc. No.	Prep. Sky-Xin Zhang 02.08.2023	Title AUXILIARY VOLTAGE	Circuit diagram EFS2	Item Des.	
Cust. Ref. No.	App.	DSU	SAP Doc. No.	= 01	
Customer WMMP	Project Zhaka Jack-up Lift System	ACS880-307-0910A-3	EPLAN Doc. No. 3ABDC230674 - 01	+ 01.1	
	Zhaka Jack-up Lift System-1	400V 50 Hz IP22	ABB Ref. No.	Rev. .1	Sheet 022a
			Resp. Dept.	Cont.	026a

ICU
CABINET FANS

ACU & ICU CABINET FAN AND
MAIN BREAKER CONTROL

ACU
CABINET FAN

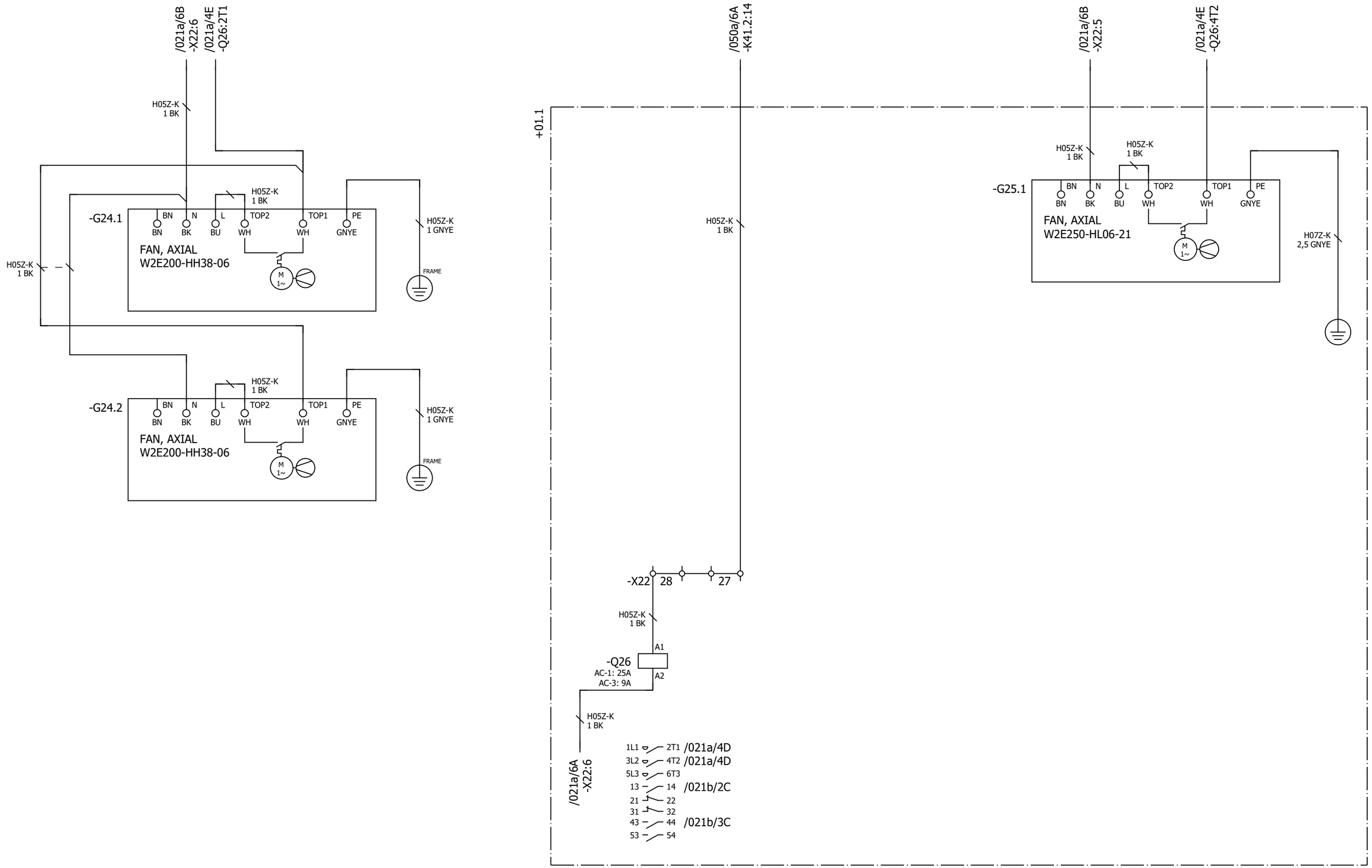

P345812 / 29711

Cust. Doc. No.	Prep. Sky-Xin Zhang 02.08.2023	Title FAN SUPPLY CONTROL DSU ACS880-307-0910A-3 400V 50 Hz IP22	Circuit diagram EFS2
Cust. Ref. No.	App.		SAP Doc. No.
Customer WMMP	Project Zhaka Jack-up Lift System Zhaka Jack-up Lift System-1		EPLAN Doc. No. 3ABDC230674 - 01
			ABB Ref. No.
			Resp. Dept.

Item Des.
= 01
+ 01.2

Rev. .1 Sheet 026a
Cont. 050a

Control and status signals	Terminal	Pin
-A51 CHARGING CONTACTOR CONTROL	-XRO1	12
-A51 FAULT (-1) 1 - NO FAULT	-XRO2	22
-A51 MAIN BREAKER CONTROL	-XRO3	32

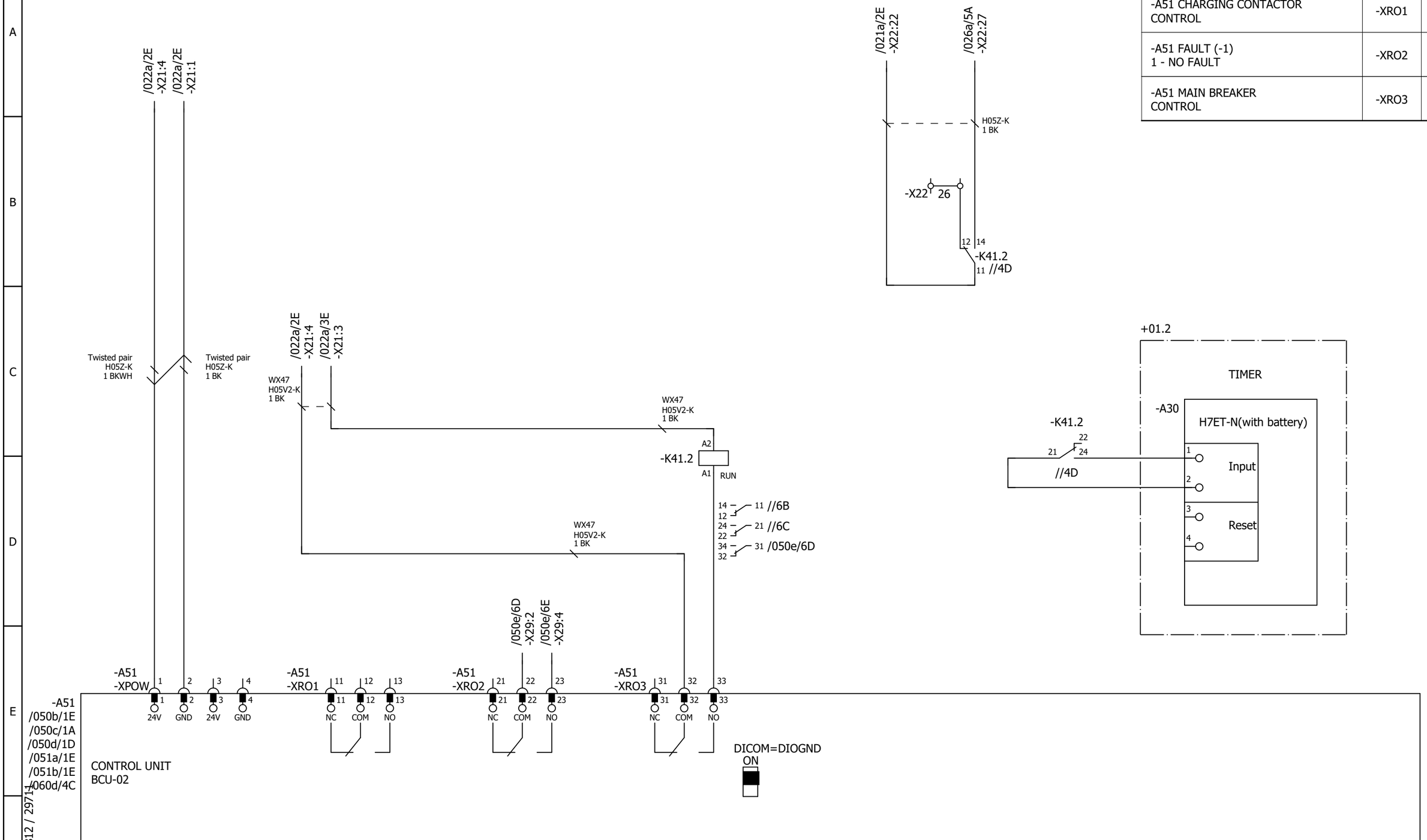

Cust. Doc. No.	Prep. Sky-Xin Zhang 02.08.2023	Title CONTROL BOARD DSU ACS880-307-0910A-3 400V 50 Hz IP22	Circuit diagram EFS2
Cust. Ref. No.	App.		SAP Doc. No.
Customer WMMP	Project Zhaka Jack-up Lift System		EPLAN Doc. No. 3ABDC230674 - 01
	Zhaka Jack-up Lift System-1		ABB Ref. No.
			Resp. Dept.

Item Des. = 01 + 01.1

Rev. .1 Sheet 050a

Cont. 050b

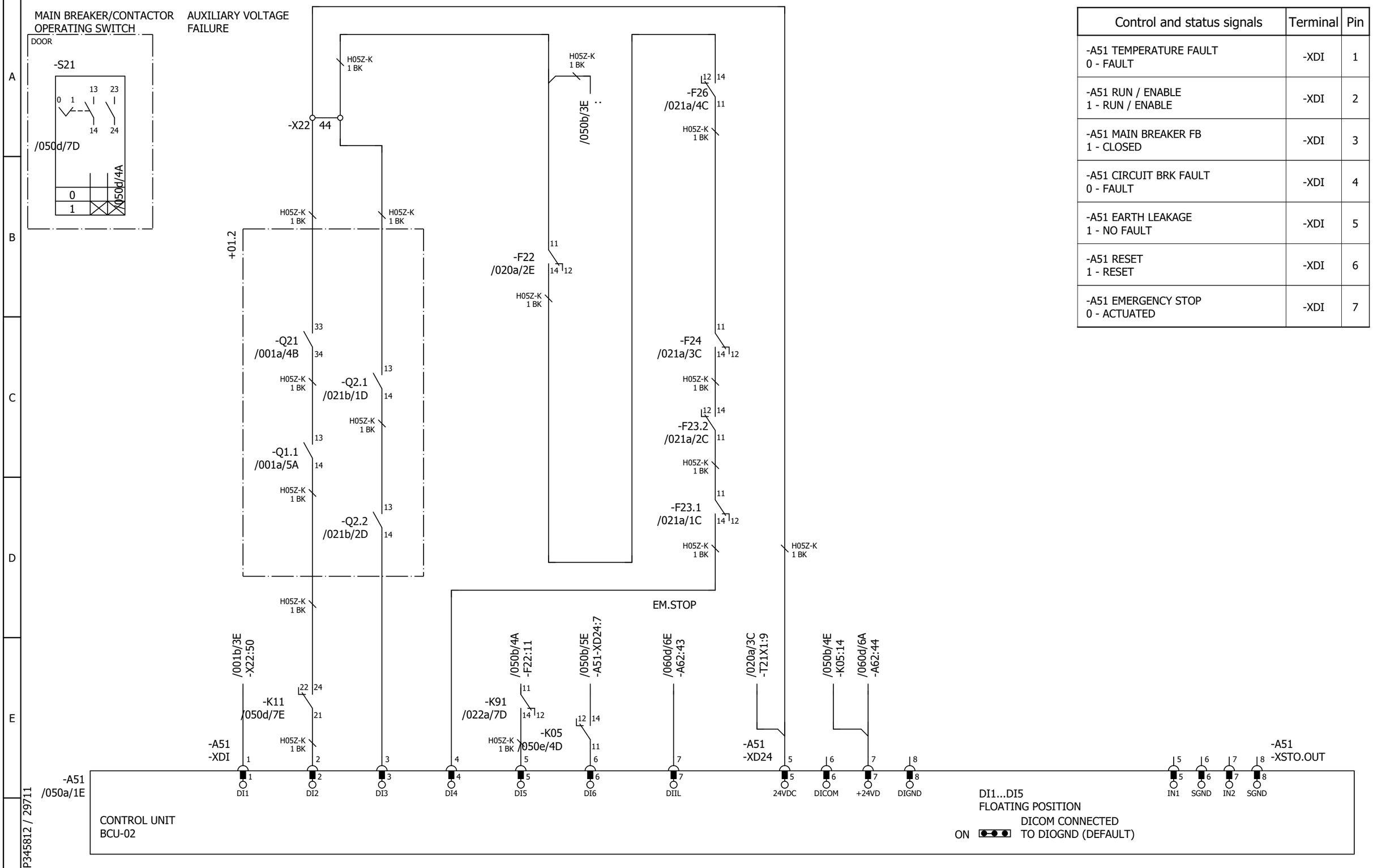

Control and status signals	Terminal	Pin
-A51 TEMPERATURE FAULT 0 - FAULT	-XDI	1
-A51 RUN / ENABLE 1 - RUN / ENABLE	-XDI	2
-A51 MAIN BREAKER FB 1 - CLOSED	-XDI	3
-A51 CIRCUIT BRK FAULT 0 - FAULT	-XDI	4
-A51 EARTH LEAKAGE 1 - NO FAULT	-XDI	5
-A51 RESET 1 - RESET	-XDI	6
-A51 EMERGENCY STOP 0 - ACTUATED	-XDI	7

Cust. Doc. No.	Prep. Sky-Xin Zhang 02.08.2023	Title CONTROL BOARD DSU ACS880-307-0910A-3 400V 50 Hz IP22	Circuit diagram EFS2
Cust. Ref. No.	App.		SAP Doc. No.
Customer WMMP	Project Zhaka Jack-up Lift System Zhaka Jack-up Lift System-1		EPLAN Doc. No. 3ABDC230674 - 01
			ABB Ref. No.
			Resp. Dept.

Item Des. = 01 + 01.1

Rev. .1 Sheet 050b

Cont. 050c

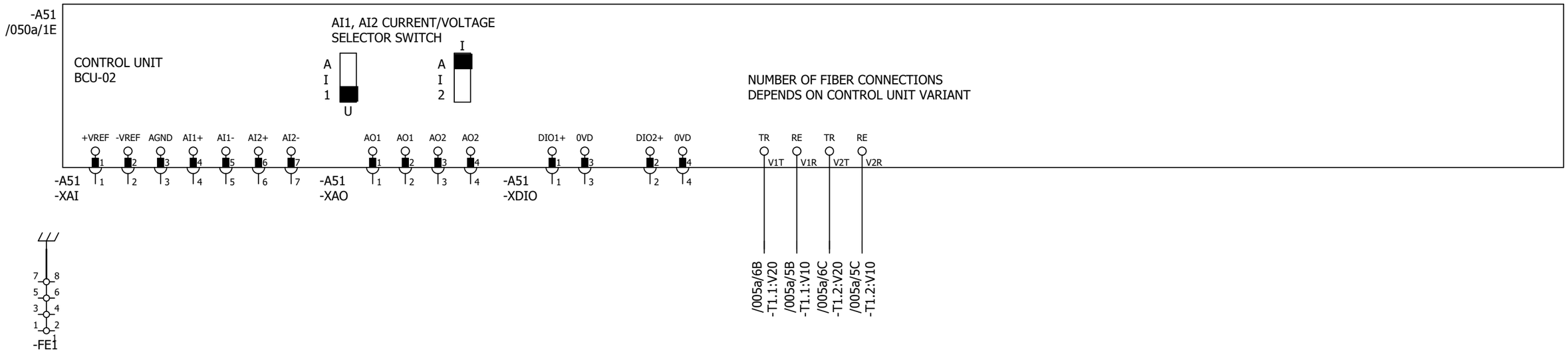

Control and status signals	Terminal	Pin
-A51 AI1 NOT SPECIFIED BY DEFAULT NOT IN USE, 0(2)...10V	-XAI	4
-A51 AI2 NOT SPECIFIED BY DEFAULT NOT IN USE, 0(4)...20mA	-XAI	6
-A51 AO1 NOT SPECIFIED BY DEFAULT NOT IN USE, 0(4)...20mA	-XAO	1
-A51 AO2 NOT SPECIFIED BY DEFAULT NOT IN USE, 0(4)...20mA	-XAO	3
-A51 DIO1 NOT SPECIFIED BY DEFAULT NOT IN USE, 0(4)...20mA	-XDIO	1
-A51 DIO2 NOT SPECIFIED BY DEFAULT NOT IN USE, 0(4)...20mA	-XDIO	2

P345812 / 29711

Cust. Doc. No.	Prep. Sky-Xin Zhang 02.08.2023	Title CONTROL BOARD DSU ACS880-307-0910A-3 400V 50 Hz IP22	Circuit diagram EFS2
Cust. Ref. No.	App.		SAP Doc. No.
Customer WMMP	Project Zhaka Jack-up Lift System Zhaka Jack-up Lift System-1		EPLAN Doc. No. 3ABDC230674 - 01
			ABB Ref. No.
			Resp. Dept.

Item Des.
= 01
+ 01.1

Rev. .1 Sheet 050c
Cont. 050d

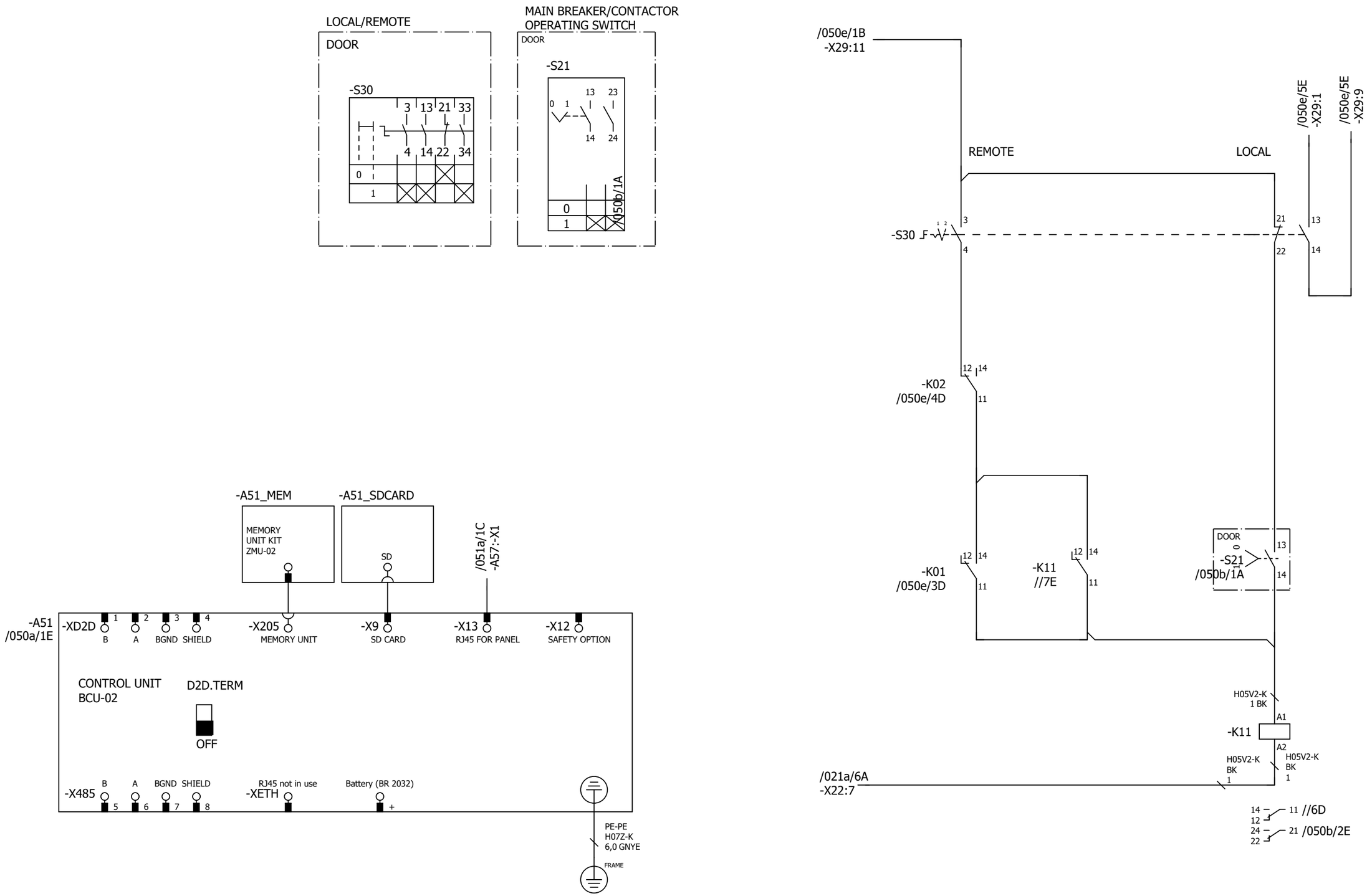

Cust. Doc. No.	Prep. Sky-Xin Zhang 02.08.2023	Title CONTROL BOARD DSU ACS880-307-0910A-3 400V 50 Hz IP22	Circuit diagram EFS2
Cust. Ref. No.	App.		SAP Doc. No.
Customer WMMP	Project Zhaka Jack-up Lift System Zhaka Jack-up Lift System-1		EPLAN Doc. No. 3ABDC230674 - 01
			ABB Ref. No.
			Resp. Dept.

Item Des.
= 01
+ 01.1

Rev. .1 Sheet 050d
Cont. 050e

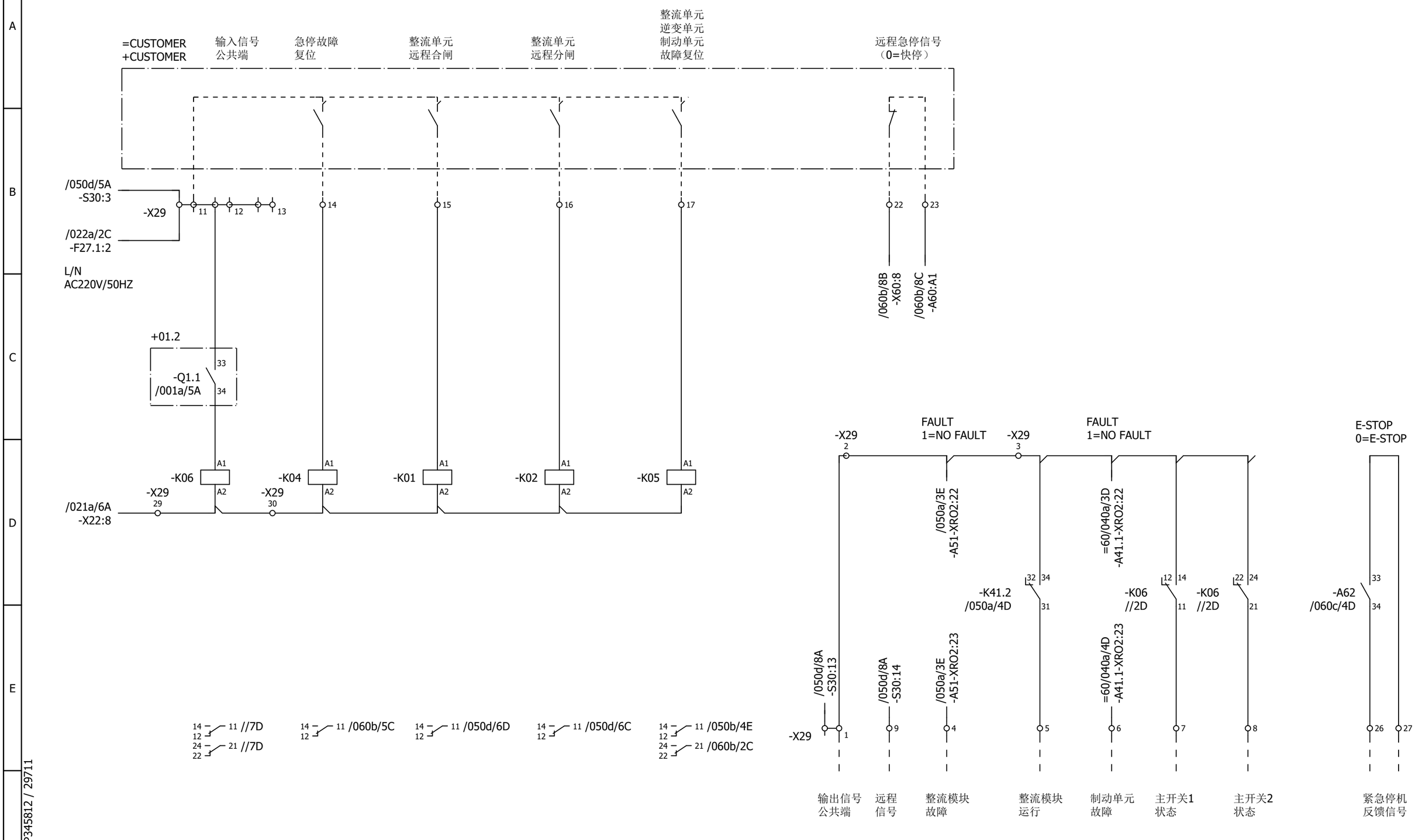

P345812 / 29711

Cust. Doc. No.	Prep. Sky-Xin Zhang 02.08.2023	Title CONTROL BOARD DSU ACS880-307-0910A-3 400V 50 Hz IP22	Circuit diagram EFS2	Item Des.	
Cust. Ref. No.	App.		SAP Doc. No.	= 01 + 01.1	
Customer WMMP	Project Zhaka Jack-up Lift System Zhaka Jack-up Lift System-1		EPLAN Doc. No. 3ABDC230674 - 01		
			ABB Ref. No.	Rev. .1	Sheet 050e
			Resp. Dept.	Cont.	051a

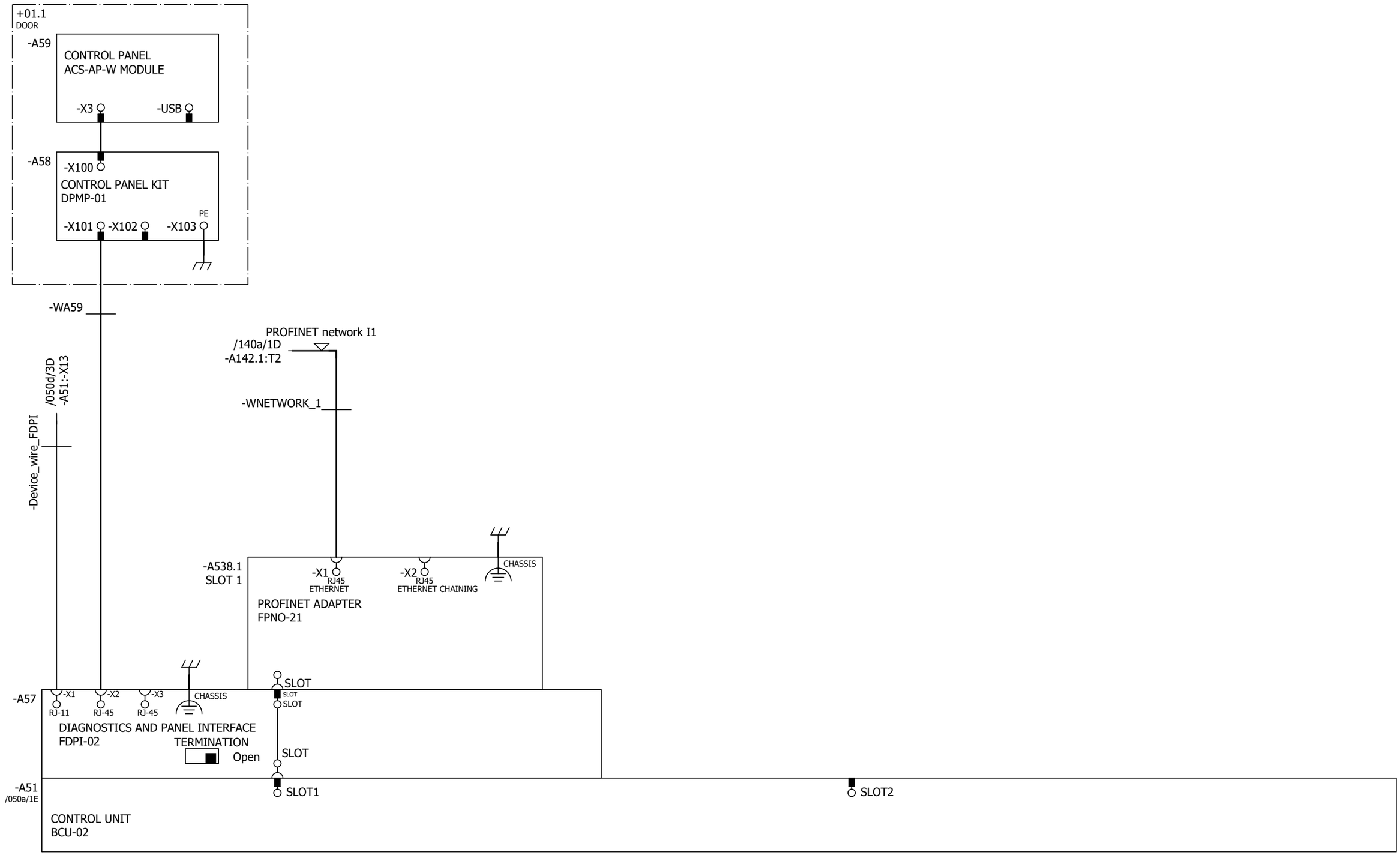

Cust. Doc. No.	Prep. Sky-Xin Zhang 02.08.2023	Title OPTION CARDS	Circuit diagram EFS2	Item Des.	
Cust. Ref. No.	App.	DSU	SAP Doc. No.	= 01	
Customer WMMP	Project Zhaka Jack-up Lift System	ACS880-307-0910A-3	EPLAN Doc. No. 3ABDC230674 - 01	+ 01.1	
	Zhaka Jack-up Lift System-1	400V 50 Hz IP22	ABB Ref. No.	Rev. .1	Sheet 051a
			Resp. Dept.	Cont.	051b

P345812 / 29711

-A51
/050a/1E

SLOT3

SLOT4

CONTROL UNIT
BCU-02

Cust. Doc. No.	Prep. Sky-Xin Zhang 02.08.2023	Title OPTION CARDS	Circuit diagram EFS2	Item Des.	
Cust. Ref. No.	App.	DSU	SAP Doc. No.	= 01	
Customer WMMP	Project Zhaka Jack-up Lift System	ACS880-307-0910A-3	EPLAN Doc. No. 3ABDC230674 - 01	+ 01.1	
	Zhaka Jack-up Lift System-1	400V 50 Hz IP22	ABB Ref. No.	Rev. .1	Sheet 051b
			Resp. Dept.	Cont.	060a

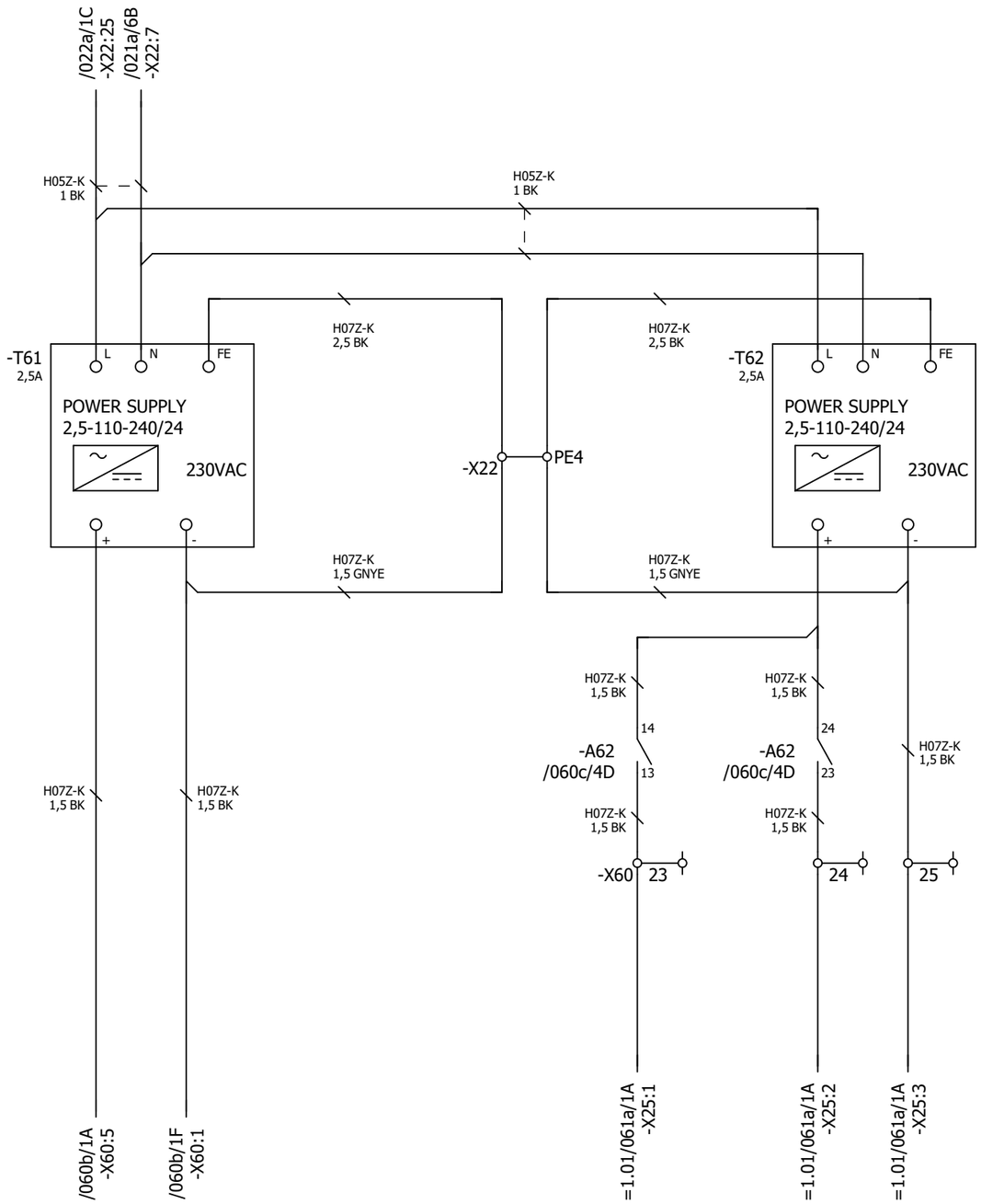

P345812 / 29711

SAFETY CIRCUIT
MACRO REVISION 1
RULES CONVERTED 9.6.2020

Cust. Doc. No.	Prep. Sky-Xin Zhang 02.08.2023	Title SAFETY CIRCUIT	Circuit diagram EFS2	Item Des.	
Cust. Ref. No.	App.	DSU	SAP Doc. No.	= 01	
Customer WMMP	Project Zhaka Jack-up Lift System	ACS880-307-0910A-3	EPLAN Doc. No. 3ABDC230674 - 01	+ 01.1	
	Zhaka Jack-up Lift System-1	400V 50 Hz IP22	ABB Ref. No.	Rev. .1	Sheet 060a
			Resp. Dept.	Cont.	060b

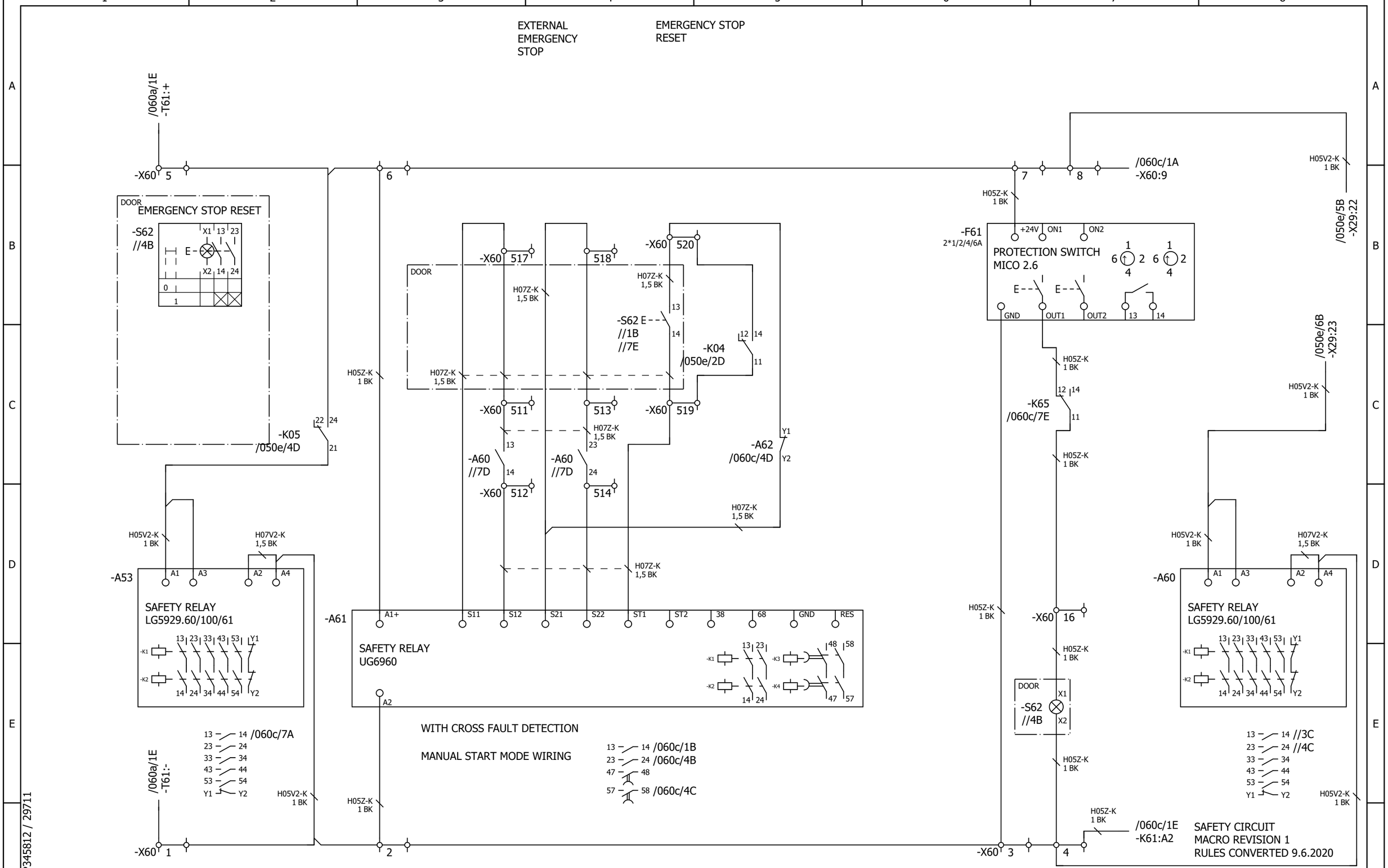

Cust. Doc. No.	Prep. Sky-Xin Zhang 02.08.2023	Title SAFETY CIRCUIT	Circuit diagram EFS2	Item Des.
Cust. Ref. No.	App.	DSU	SAP Doc. No.	= 01
Customer WMMP	Project Zhaka Jack-up Lift System	ACS880-307-0910A-3	EPLAN Doc. No. 3ABDC230674 - 01	+ 01.1
	Zhaka Jack-up Lift System-1	400V 50 Hz IP22	ABB Ref. No.	Rev. .1 Sheet 060b
			Resp. Dept.	Cont. 060c

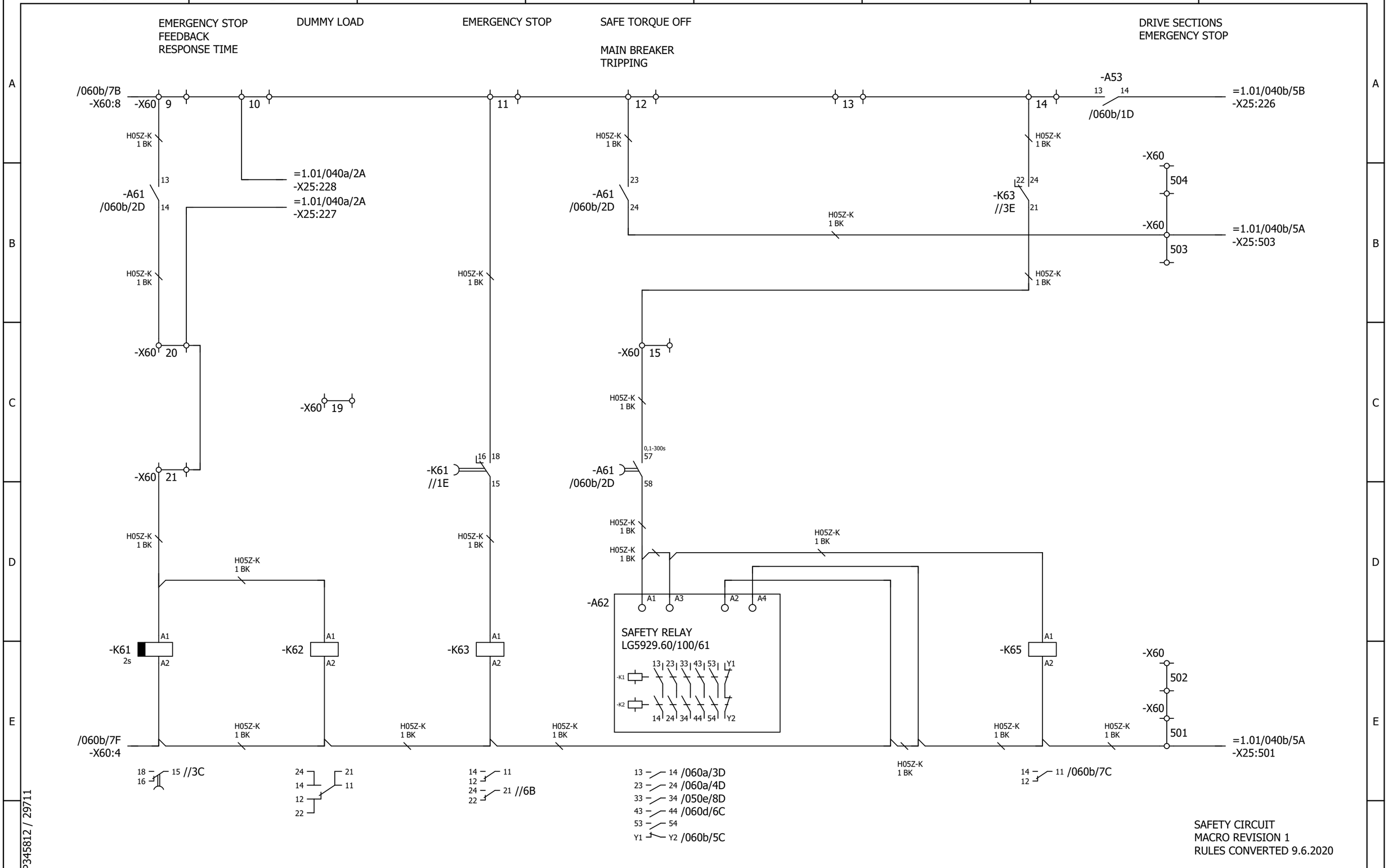

Cust. Doc. No.	Prep. Sky-Xin Zhang 02.08.2023	Title SAFETY CIRCUIT	Circuit diagram EFS2	Item Des.	
Cust. Ref. No.	App.	DSU	SAP Doc. No.	= 01	
Customer WMMP	Project Zhaka Jack-up Lift System	ACS880-307-0910A-3	EPLAN Doc. No. 3ABDC230674 - 01	+ 01.1	
	Zhaka Jack-up Lift System-1	400V 50 Hz IP22	ABB Ref. No.	Rev. .1	Sheet 060c
			Resp. Dept.	Cont.	060d

FEEDBACK TO
RESET CIRCUIT

EM STOP

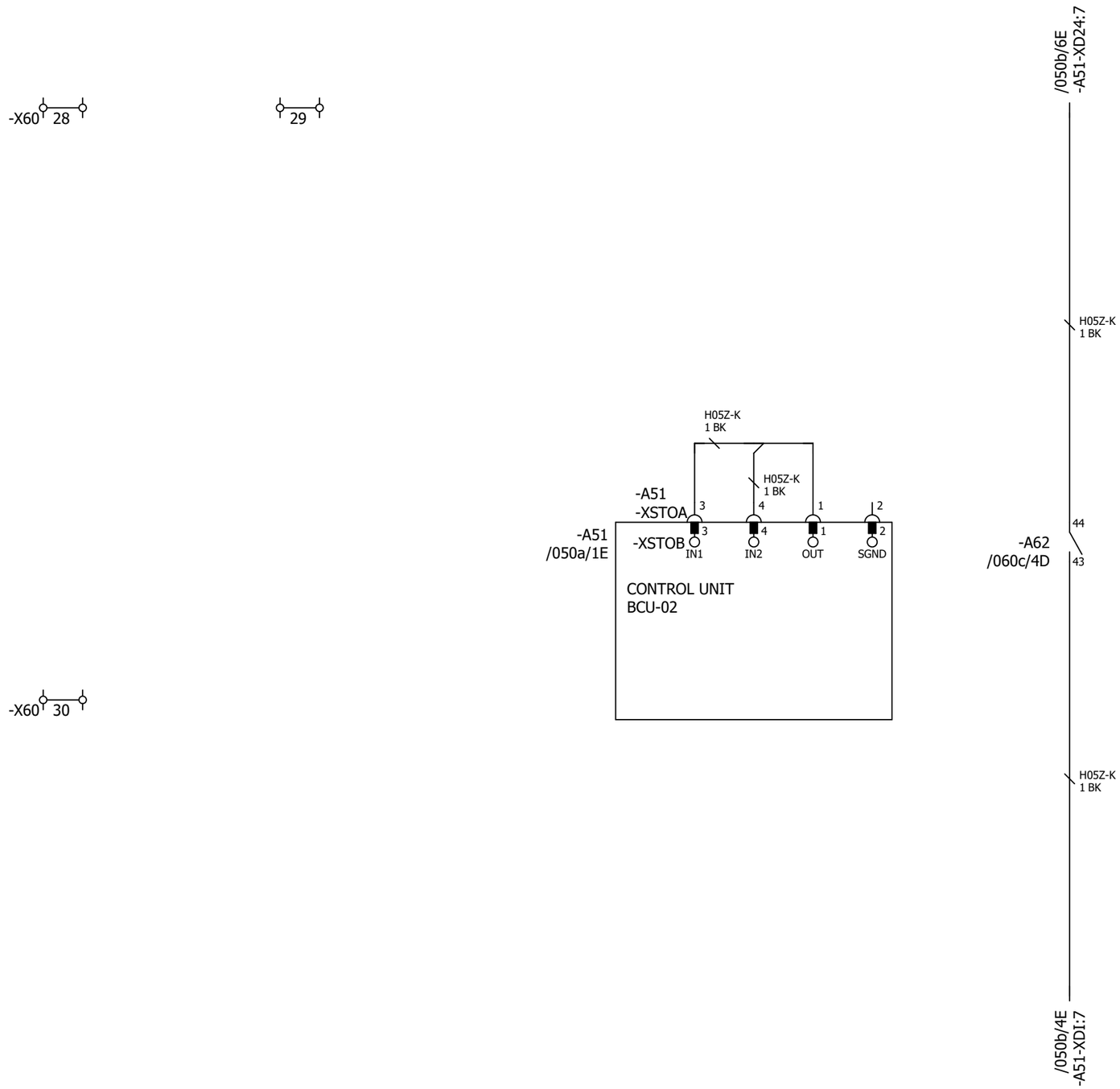

P345812 / 29711

SAFETY CIRCUIT
MACRO REVISION 1
RULES CONVERTED 9.6.2020

Cust. Doc. No.	Prep. Sky-Xin Zhang 02.08.2023	Title SAFETY CIRCUIT	Circuit diagram EFS2
Cust. Ref. No.	App.	DSU	SAP Doc. No.
Customer WMMP	Project Zhaka Jack-up Lift System	ACS880-307-0910A-3	EPLAN Doc. No. 3ABDC230674 - 01
	Zhaka Jack-up Lift System-1	400V 50 Hz IP22	ABB Ref. No.
			Resp. Dept.

Item Des.
= 01
+ 01.1

Rev. .1 Sheet 060d
Cont. 095a

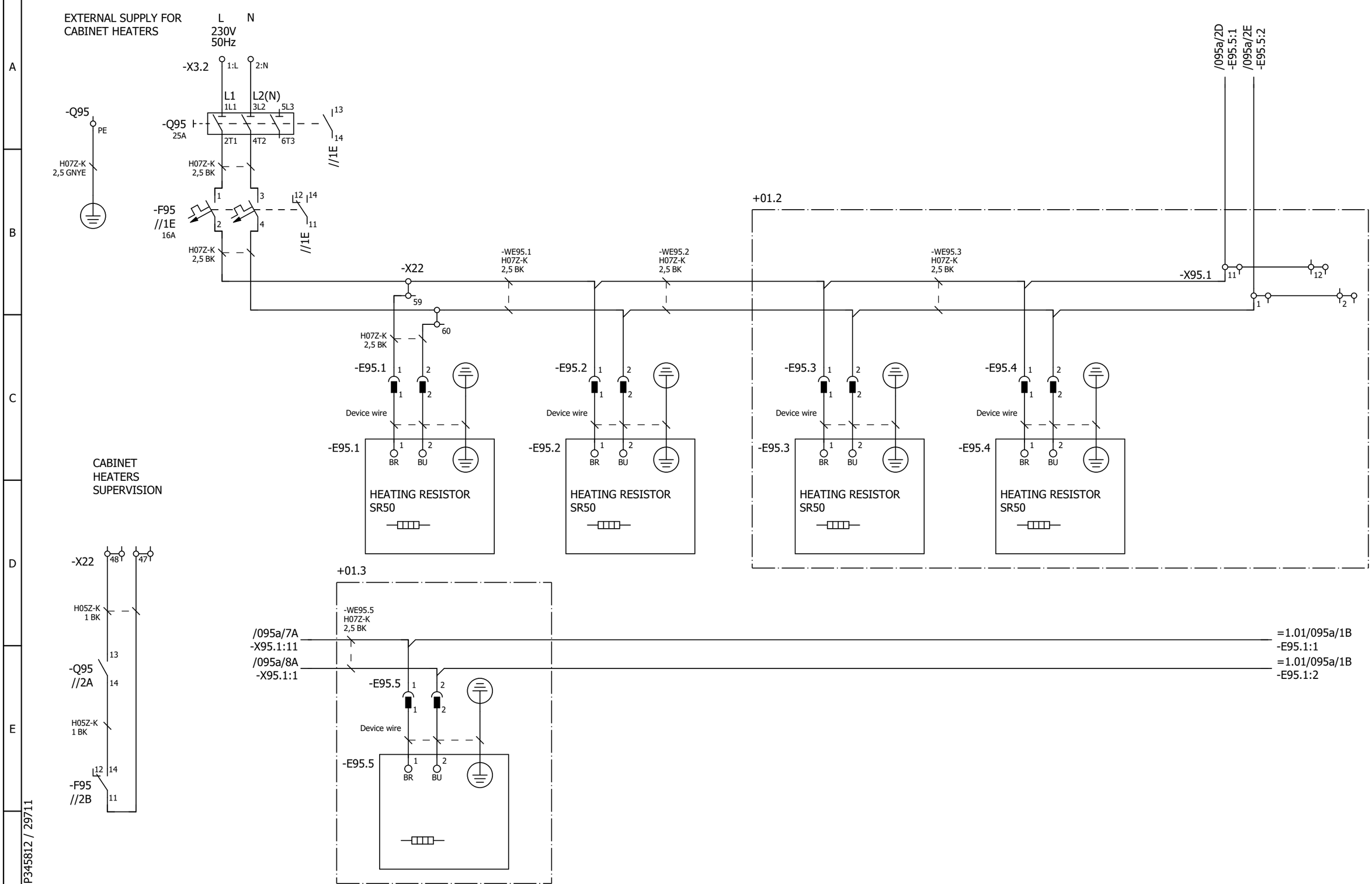

Cust. Doc. No.	Prep. Sky-Xin Zhang 02.08.2023	Title CABINET HEATER DSU ACS880-307-0910A-3 400V 50 Hz IP22	Circuit diagram EFS2	Item Des.	
Cust. Ref. No.	App.		SAP Doc. No.	= 01 + 01.1	
Customer WMMP	Project Zhaka Jack-up Lift System Zhaka Jack-up Lift System-1		EPLAN Doc. No. 3ABDC230674 - 01		
			ABB Ref. No.	Rev. .1	Sheet 095a
			Resp. Dept.	Cont.	140a

SWITCH FOR:
PROFINET network I2

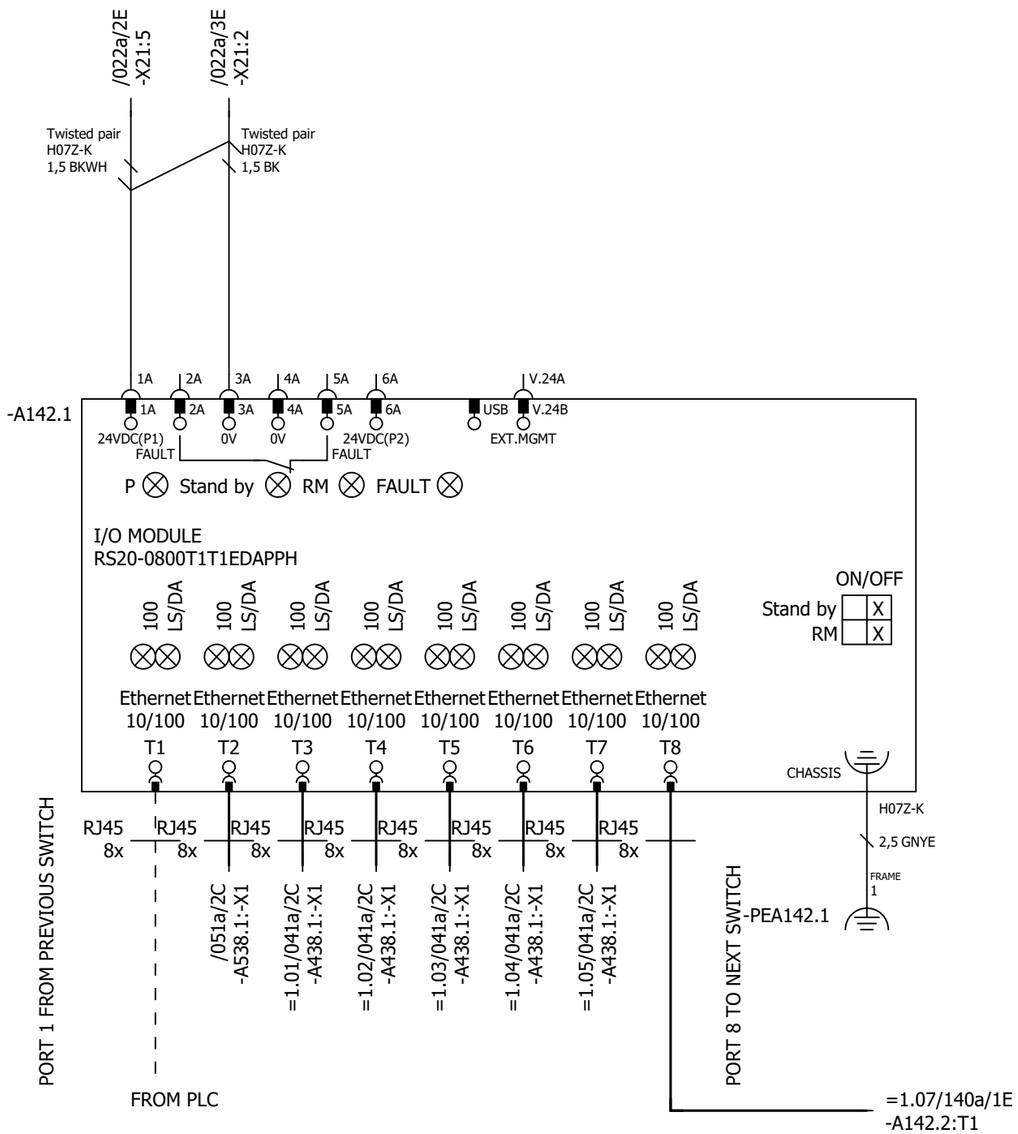

IF SWITCH IS NOT ALLOCATED TO FIRST UNIT IN NETWORK,
CHAIN AND RING TOPOLOGIES ARE NOT GENERATED OPTIMALLY
FROM WIRING PERSPECTIVE. PLEASE CHECK CONNECTIONS.

GENERATED WIRING ORDER, IF SWITCH IS ALLOCATED TO LAST UNIT IN NETWORK:
1) UNIT WITH SWITCH
2) FIRST UNIT IN NETWORK
3) SECOND UNIT IN NETWORK
....
n) UNIT BEFORE SWITCH

NOTE!
INSTALL GREEN PROFINET CABLES IN PROFINET/PROFIsafe NETWORK

P345812 / 29711

Cust. Doc. No.	Prep. Sky-Xin Zhang 02.08.2023	Title OPTION CARDS	Circuit diagram EFS2	Item Des.	
Cust. Ref. No.	App.	DSU	SAP Doc. No.	= 01	
Customer WMMP	Project Zhaka Jack-up Lift System	ACS880-307-0910A-3	EPLAN Doc. No. 3ABDC230674 - 01	+ 01.1	
	Zhaka Jack-up Lift System-1	400V 50 Hz IP22	ABB Ref. No.	Rev. .1	Sheet 140a
			Resp. Dept.	Cont.	&MPC/Part list_1

Part list: 3ABDC230674SU01001

Item	Sort String	Qty.Str	Unit	Component Number	Description and text	Technical data
0010		1.000	ST		ACS880-307-0910A-3+A004+A012+A018+B053+	
0020		1.000	ST		_C121+C132+C206+E210+F250+F253+G300+G307	
0030		1.000	ST		_+G315+G316+G320+G330+G334+G335+G344+H35	
0040		1.000	ST		_0+H367+J400+K492+L509+P913+Q954+Q964	
0050		1.000	ST		=01	
0060		1.000	ST		+01.1,ACU4	
0070		1.000	ST		SAFETYCIRCUIT	
0080	-A61	1.000	PC	3AXD50000011999	SAFETY RELAY UG 6960.04PS/100/61	24 V;DC;0,15 A;0,1-300s;2NO+2NO DELAYED
0090	-A62	1.000	PC	3AUA0000046678	SAFETY RELAY LG 5929.60/100/61	5NO+1NC AC/DC 24V 50/60HZ
0100	-F27	1.000	PC	3AFE68264766	PROTECTION SWITCH S 201-K6	S 201-K6
0110	(-F27)	1.000	PC	3AFE68265258	AUXILIARY CONTACT S2C-H6R	10A (ITH), AC14, 400V/1A, 230V/2A S2C
0120	-F61	1.000	PC	3AXD50000000391	PROTECTION SWITCH MICO2.6	18...30V, 1A, 2A, 4A, 6A
0130	-K61	1.000	PC	3AFE68782813	TIME RELAY CT-ARS.11 0.5S-10MIN	24-220VAC/DC 1CO 1SRV630120R3100
0140	-K62	1.000	PC	3AUA0000024426	RELAY RCL314024-24DC-DIODE	16 A;250 VAC;24VDC,1C/O,UL
0150	-K63	1.000	PC	3AUA0000102191	RELAY RCL425024-SOCKET-DIODE	8 A;24 V;24VDC, 2C/O
0160	-S62	1.000	PC	3AUA0000054384	PUSH BUTTON MP1-11L	BLUE PUSH BUTTON, D=22MM
0170	(-S62)	1.000	PC	3AUA0000054387	AUXILIARY CONTACT MCB-10	1 NO
0180	(-S62)	1.000	PC	3AUA0000054387	AUXILIARY CONTACT MCB-10	1 NO
0190	(-S62)	1.000	PC	3AUA0000054389	PLASTIC HOUSING MCBH-00	HOLDER
0200	(-S62)	1.000	PC	3AUA0000131773	ADHESIVE LABEL KA1-8120	FOR 3 POSITION SWITCH
0210	(-S62)	1.000	PC	3AXD50000000360	LAMP INDICATOR MLBL-01W	24 V, AC/DC, WHITE
0220	(-S62)	1.000	PC	3AXD50000000991	RATING PLATE (E-ST-RESET)MA6-1090-L	MA6-1090-L
0230	-T61	1.000	PC	3ABD00068117	POWER SUPPLY MDR-60-24	85 - 264 V;AC;OUTPUT 24 VDC +-1%, 2,5A
0240	-T62	1.000	PC	3ABD00068117	POWER SUPPLY MDR-60-24	85 - 264 V;AC;OUTPUT 24 VDC +-1%, 2,5A
0250	-X60	1.000	PC	3AXD50000002241	TERMINAL BLOCK AS X60 E-STOP STANDARD	12 AWG;2 mm2;20 A;600 V
0260		1.000	ST		AUXILIARYVOLTAGEDISTRIBUTION	
0270	-F20	1.000	PC	3AFE68264979	PROTECTION SWITCH S 202-K16	
0280	(-F20)	1.000	PC	3AFE68265258	AUXILIARY CONTACT S2C-H6R	10A (ITH), AC14, 400V/1A, 230V/2A S2C
0290	-F22	1.000	PC	3AFE68264791	PROTECTION SWITCH S 201-K10	ACS800 MD
0300	(-F22)	1.000	PC	3AFE68265258	AUXILIARY CONTACT S2C-H6R	10A (ITH), AC14, 400V/1A, 230V/2A S2C
0310	-F23.1-2	2.000	PC	3AFE68264766	PROTECTION SWITCH S 201-K6	S 201-K6
0320	(-F23.1-2)	2.000	PC	3AFE68265258	AUXILIARY CONTACT S2C-H6R	10A (ITH), AC14, 400V/1A, 230V/2A S2C
0330	-F24	1.000	PC	3AFE68264766	PROTECTION SWITCH S 201-K6	S 201-K6

P345812 / 29711

Cust. Doc. No.	Prep.	Title PART LIST DSU ACS880-307-0910A-3 400V 50 Hz IP22	Item Des. = 01 +
Cust. Ref. No.	App.		SAP Doc. No.
Customer WMMP	Project Zhaka Jack-up Lift System Zhaka Jack-up Lift System-1		EPLAN Doc. No. 3ABDC230674 - 01
			ABB Ref. No. / Rev. / Sheet Part list_1
			Resp. Dept. / Cont. Part list_2

Part list: 3ABDC230674SU01001

Item	Sort String	Qty.Str	Unit	Component Number	Description and text	Technical data
0340	(-F24)	1.000	PC	3AFE68265258	AUXILIARY CONTACT S2C-H6R	10A (ITH), AC14, 400V/1A, 230V/2A S2C
0350	-F29	1.000	PC	3AFE68264766	PROTECTION SWITCH S 201-K6	S 201-K6
0360	(-F29)	1.000	PC	3AFE68265258	AUXILIARY CONTACT S2C-H6R	10A (ITH), AC14, 400V/1A, 230V/2A S2C
0370	-Q20	1.000	PC	3AUA0000047420	DISCONNECTOR OT 40F3	40A 690V
0380	(-Q20)	1.000	PC	3AUA0000047421	ENCLOSURE TERMINAL SHROUD OTS40T	
0390	(-Q20)	1.000	PC	3AUA0000047423	AUXILIARY CONTACT OTPE 40FP	OT16...OT40F3
0400	(-Q20)	1.000	PC	3AUA0000047451	HANDLE OHBS 12/1	6X6
0410	(-Q20)	1.000	PC	3AFE59022911	AUXILIARY CONTACT OA 2G11	1NO+1NC,230V 6A AC15
0420	-T21	1.000	PC	3ABD00055509	TRANSFORMER M1V5/2-25D	380/400/415/440/460/480/500V;2,50 KVA
0430	-T22	1.000	PC	3ABD00010542	POWER SUPPLY NDR-120-24	24V 5A
0440	-X21	1.000	PC	3AXD50000004432	TERMINAL BLOCK AS X21	12 AWG;2,50 mm2;20 A;600 V
0450		1.000	ST		MAINCONTACTOR/BREAKERCONTROL	
0460	-S21	1.000	PC	3AUA0000095648	SELECTOR SWITCHES C2SS2-10B-20	1A@240VAC, 0,3A@24VDC
0470	(-S21)	1.000	PC	3AUA0000117867	PLASTIC HOUSING BLOCK SHEET FOR PANNEL	
0480	(-S21)	1.000	PC	3AUA0000117869	ASSEMBLY PLATE MOUNTING FOR BUTTON PL	MOUNTING FOR BUTTON PLATE
0490	(-S21)	1.000	PC	3AUA0000131773	ADHESIVE LABEL KA1-8120	FOR 3 POSITION SWITCH
0500	(-S21)	1.000	PC	3AUA0000139963	RATING PLATE INSERTS (0 - I)	MA6-1087
0510		1.000	ST		CONTROLBOARD	
0520	-A51	1.000	PC	3AUA0000110429	CONTROL UNIT BCU-02, MAIN ASSEMBLY	fiber optic links for 2 modules
0530	-A51_MEM	1.000	PC	3AXD50000006010	MEMORY UNIT KIT ZMU-02	
0540	-A58	1.000	PC	3AUA0000108878	CONTROL PANEL KIT DPMP-01	DPMP-01
0550	-A59	1.000	PC	3AXD50000025964	CONTROL PANEL ACS-AP-W MODULE	ASSISTANT PANEL WIRELESS CPU1
0560	SCREW	1.000	PC	3AFE68681481	SCREW K30X10 TORX	PT WN1452 ZN
0570	SOFTWARE	1.000	PC	3AUA0000124971	SOFTWARE ADIF2 FOR BCU-X2	ADIF2 FOR BCU-X2
0580		1.000	ST		PANELBUS	
0590	-A57	1.000	PC	3AUA0000108650	FIELDBUS KIT FDPI-02	PANEL BUS ADAPTER
0600		1.000	ST		EARTHFAULTMONITORING	
0610	-A90	1.000	PC	3ABD50000947577	INSUL MON DEVICE LK 5895.12/010/61 DC 2	MEAS. 0..1100VAC/0..1500VDC
0620	-K91	1.000	PC	3AUA0000102191	RELAY RCL425024-SOCKET-DIODE	8 A;24 V;24VDC, 2C/O
0630	-S90	1.000	PC	3AUA0000131070	PUSH BUTTON MP1-11Y	LIGHTED PUSHBUTTON, MOMENTARY , YELLOW
0640	(-S90)	1.000	PC	3AUA0000054387	AUXILIARY CONTACT MCB-10	1 NO
0650	(-S90)	1.000	PC	3AUA0000054388	AUXILIARY CONTACT MCB-01	1 NC
0660	(-S90)	1.000	PC	3AUA0000054389	PLASTIC HOUSING MCBH-00	HOLDER

P345812 / 29711

Cust. Doc. No.	Prep.	Title PART LIST DSU ACS880-307-0910A-3 400V 50 Hz IP22	Item Des. = 01 +
Cust. Ref. No.	App.	SAP Doc. No.	
Customer WMMP	Project Zhaka Jack-up Lift System Zhaka Jack-up Lift System-1	EPLAN Doc. No. 3ABDC230674 - 01	
		ABB Ref. No.	Rev. / Sheet Part list_2
		Resp. Dept.	Cont. Part list_3

Part list: 3ABDC230674SU01001

Item	Sort String	Qty.Str	Unit	Component Number	Description and text	Technical data
0670	(-S90)	1.000	PC	3AXD50000000360	LAMP INDICATOR MLBL-01W	24 V, AC/DC, WHITE
0680	-X90	1.000	PC	3AFE68486688	TERMINAL BLOCK AS ACS800MD	UNEARTHED NET MONITOR
0690		1.000	ST		ANTI-CONDENSATIONHEATING	
0700	-E95.1-2	2.000	PC	3AFE09827498	HEATING EQUIPMENT SR50	HEATER 50W/220V(110-270VACDC)
0710	(-E95.1-2)	2.000	PC	3AUA0000066694	CONNECTOR SSL2.5 3043815	LOCKING ELEMENTS FOR ST-COMBI CONNECTOR
0720	(-E95.1-2)	2.000	PC	3AXD50000007033	CONNECTOR SC 2,5/ 2	2,50 mm2;24 A;500 V;2-POS. MALE
0730	-F95	1.000	PC	3AFE68264979	PROTECTION SWITCH S 202-K16	
0740	(-F95)	1.000	PC	3AFE68265258	AUXILIARY CONTACT S2C-H6R	10A (ITH), AC14, 400V/1A, 230V/2A S2C
0750	-Q95	1.000	PC	3AUA0000047431	DISCONNECTOR OT 25F3	
0760	(-Q95)	1.000	PC	3AUA0000047421	ENCLOSURE TERMINAL SHROUD OTS40T	
0770	(-Q95)	1.000	PC	3AUA0000047423	AUXILIARY CONTACT OTPE 40FP	OT16...OT40F3
0780	(-Q95)	1.000	PC	3AUA0000047451	HANDLE OHBS 12/1	6X6
0790	(-Q95)	1.000	PC	3AFE64078488	AUXILIARY CONTACT OA1G10	1NO;6 A;230 V;AC15;4 A;400 V
0800	-WE95.1-2	2.000	PC	3AXD50000010441	WIRE HARNESS SET_HP_E95_FRAME_V2	__ - E95
0810	Assemblypa	2.000	PC	3AXD50000010133	ASSEMBLY PLATE HEATER	STEEL HDG 1,0;DEGREAS CLEAN
0820	Heaterunit	1.000	PC	3AXD50000010509	ASSEMBLY DRAWING HEATER 50 AND 100W	
0830		1.000	ST		COMMONTERMINALBLOCK	
0840	-X22	1.000	PC	3AXD50000004433	TERMINAL BLOCK AS X22	12 AWG;2,50 mm2;20 A;600 V
0850		1.000	ST		FANCONTROL	
0860	-Q26	1.000	PC	3AXD50000000403	CONTACTOR AF09-30-10-13 UL,IEC,	7A;690V;25A AC-1, COIL 100-250V CSA,IEC,
0870	(-Q26)	1.000	PC	3AUA0000091225	AUXILIARY CONTACT CA4-22M	16A, 50/60Hz, 690V, 2NO/2NC
0880		1.000	ST		DSUMODULEVENTILATION	
0890	-F26	1.000	PC	3AFE68264758	PROTECTION SWITCH S 201-K4	4A, 440VAC/60VDC
0900	(-F26)	1.000	PC	3AFE68265258	AUXILIARY CONTACT S2C-H6R	10A (ITH), AC14, 400V/1A, 230V/2A S2C
0910		1.000	ST		DDCSCOMMUNICATION	
0920		1.000	ST		ACCESSORIES	
0930	ACCESSORY	1.000	PC	3ABD00006287	HANDLE XK06-101-2522	1000V,FOR DIN 00,1,2,3
0940	ACCESSORY	1.000	PC	3AFE36628740	DOCUMENT POCKET DOCUMENT POCKET	For ACS880
0950		1.000	ST		ACUFAN	
0960	-G25.1	1.000	PC	3AUA0000125508	FAN W2E250-HL06-21	0,51 A;50 Hz;60 Hz;230 V;115/165W 3µF
0970		1.000	ST		FIELDBUS	
0980	-A538.1	1.000	PC	3AXD50000192779	OPTION MODULE FPNO-21	PROFINET IO
0990		1.000	ST		+01.2,ICU2	

P345812 / 29711

Cust. Doc. No.	Prep.	Title PART LIST DSU ACS880-307-0910A-3 400V 50 Hz IP22	Item Des. = 01 +
Cust. Ref. No.	App.	SAP Doc. No.	
Customer WMMP	Project Zhaka Jack-up Lift System Zhaka Jack-up Lift System-1	EPLAN Doc. No. 3ABDC230674 - 01	
		ABB Ref. No.	Rev. / Sheet Part list_3
		Resp. Dept.	Cont. Part list_4

Part list: 3ABDC230674SU01001

Item	Sort String	Qty.Str	Unit	Component Number	Description and text	Technical data
1000		1.000	ST		AUXILIARYVOLTAGEDISTRIBUTION	
1010	-Q21	1.000	PC	3AXD50000003362	FUSE SWITCH OS160GD12	160,00 A;1000,00 V;3 POLE, IP=17,5KA, HA
1020	(-Q21)	1.000	PC	3AUA0000051607	HANDLE FOR SWITCH OHB65J6	BLACK
1030	(-Q21)	3.000	PC	3AUA0000086961	SWITCH ACCESSORIE OSS 160GT 1S/3 COVER	Transparent short shroud
1040	(-Q21)	1.000	PC	3AXD50000000984	HANDLE OXP6X161 SHAFT	SHAFT
1050	(-Q21)	1.000	PC	3AFE64078488	AUXILIARY CONTACT OA1G10	1NO;6 A;230 V;AC15;4 A;400 V
1060	(-Q21)	1.000	PC	3AFE64078488	AUXILIARY CONTACT OA1G10	1NO;6 A;230 V;AC15;4 A;400 V
1070	(-Q21)	1.000	PC	3AFE64278797	AUXILIARY CONTACT OA3G 01	1NC
1080	(-Q21)	1.000	PC	3AFE68674841	SWITCH ACCESSORIE OHZX 10	
1090	-Q21-F21.1	2.000	PC	3ABD00017817	FUSE 16NHG000B-690	16A 690V
1100		1.000	ST		CURRENTMEASUREMENT	
1110	-B2.1	1.000	PC	3AFE68233232	CURR. TRANSFORMER HF5 600/1A 741E0030	600/1A
1120	-B2.2	1.000	PC	3AFE68233232	CURR. TRANSFORMER HF5 600/1A 741E0030	600/1A
1130	-P2.1-2	2.000	PC	3ABD00028058	A-METER KLY-T72 600A/1A.2-F-SC IP54	KLY-T72 600A/1A.2-F-SC IP54
1140		1.000	ST		VOLTAGEMEASUREMENT	
1150	-F5.1	1.000	PC	3AUA0000089111	PROTECTION SWITCH MS132-1.6	1.0…1.6A,400V/100kA without fuse
1160	-F5.1	1.000	PC	3AFE64693026	AUXILIARY CONTACT HKF1-11	230VAC 4A,1NC+1NO
1170	-F5.2	1.000	PC	3AUA0000089111	PROTECTION SWITCH MS132-1.6	1.0…1.6A,400V/100kA without fuse
1180	-F5.2	1.000	PC	3AFE64693026	AUXILIARY CONTACT HKF1-11	230VAC 4A,1NC+1NO
1190	-P5.1	1.000	PC	3ABD00025222	V-METER KLY-T72 600V IP54	0-600VAC IP54
1200	-P5.2	1.000	PC	3ABD00025222	V-METER KLY-T72 600V IP54	0-600VAC IP54
1210	-S5.1	1.000	PC	3AFE10032342	K1 D-024MC+ KBC 1T	12A(IE) 690V(UE)
1220	-S5.2	1.000	PC	3AFE10032342	K1 D-024MC+ KBC 1T	12A(IE) 690V(UE)
1230		1.000	ST		MAINSWITCH	
1240	(-Q1.1)_1	1.000	PC	3AFE64078488	AUXILIARY CONTACT OA1G10	1NO;6 A;230 V;AC15;4 A;400 V
1250	(-Q1.1)_2	1.000	PC	3AFE64278797	AUXILIARY CONTACT OA3G 01	1NC
1260	(-Q1.1)_4	1.000	PC	3AFE64278797	AUXILIARY CONTACT OA3G 01	1NC
1270	-Q1.1	1.000	PC	3AXD50000006326	DISCONNECTOR OT1250E12DD	1250 A;1000 V;6P,ISC=50/110KA,HANDLE 1L2
1280	-Q1.1	1.000	PC	3ABD00054645	LOCKING ELEMENTS OHZX19	OT accessory oack
1290	(-Q1.1)	1.000	PC	3AUA0000102085	SWITCH ACCESSORIE OXP12X250 SHAFT	12X250MM
1300	(-Q1.1)	1.000	PC	3AXD50000240449	HANDLE OHB200J12PTE08	T-OFF-ON-ON,OT1000-2500_DD
1310		1.000	ST		MAINFUSE	
1320	-F1.1-6	6.000	PC	3AFE68731640	HRC FUSE LINK 170M6412	800A 690V

P345812 / 29711

Cust. Doc. No.	Prep.	Title PART LIST DSU ACS880-307-0910A-3 400V 50 Hz IP22	Item Des. = 01 +
Cust. Ref. No.	App.	SAP Doc. No.	
Customer WMMP	Project Zhaka Jack-up Lift System Zhaka Jack-up Lift System-1	EPLAN Doc. No. 3ABDC230674 - 01	
		ABB Ref. No.	Rev. / Sheet Part list_4
		Resp. Dept.	Cont. Part list_5

Part list: 3ABDC230674SU01001

Item	Sort String	Qty.Str	Unit	Component Number	Description and text	Technical data
1330		1.000	ST		MAINCONTACTOR	
1340	-Q2.1-2	2.000	PC	3AFE68687284	CONTACTOR AF1250-30-22-70	
1350		1.000	ST		CABINETVENTILATION	
1360	-G24.1-2	2.000	PC	3AFE10012171	FAN W2E200-HH38-06	67 W;230 V;50/60Hz
1370	(-G24.1-2)	2.000	PC	3AFE10028850	BRACKET 78128-2-4039 FINGER SH	FOR W2E 200
1380		1.000	ST		EARTHFAULTMONITORING	
1390	-F90	1.000	PC	3AUA0000089111	PROTECTION SWITCH MS132-1.6	1.0…1.6A,400V/100kA without fuse
1400	-F90	1.000	PC	3AFE64693026	AUXILIARY CONTACT HKF1-11	230VAC 4A,1NC+1NO
1410		1.000	ST		ANTI-CONDENSATIONHEATING	
1420	-E95.3-4	2.000	PC	3AFE09827498	HEATING EQUIPMENT SR50	HEATER 50W/220V(110-270VACDC)
1430	(-E95.3-4)	2.000	PC	3AUA0000066694	CONNECTOR SSL2.5 3043815	LOCKING ELEMENTS FOR ST-COMBI CONNECTOR
1440	(-E95.3-4)	2.000	PC	3AXD50000007033	CONNECTOR SC 2,5/ 2	2,50 mm2;24 A;500 V;2-POS. MALE
1450	-WE95.3-4	2.000	PC	3AXD50000010441	WIRE HARNESS SET_HP_E95_FRAME_V2	__ - E95
1460	-X95.1	1.000	PC	3AXD50000019251	TERMINAL BLOCK AS 600 V;28 A;4 mm2;12 AW	X95._
1470	Assemblypa	2.000	PC	3AXD50000010133	ASSEMBLY PLATE HEATER	STEEL HDG 1,0;DEGREAS CLEAN
1480	Heaterunit	1.000	PC	3AXD50000010509	ASSEMBLY DRAWING HEATER 50 AND 100W	
1490		1.000	ST		THERMOSTATBUSBAR	
1500	-F6.1-2	2.000	PC	3AXD50000000921	THERMAL SWITCH KLIXON 1NT01L-3118	1NT01L-3118 L75-11 9638 M, AUTO RESET, S
1510		1.000	ST		+01.3,DSU9	
1520		1.000	ST		DSUModule	
1530	-T1.1-2	2.000	PC	3AUA0000137922	ACS880-304-0490A-3+A018	+A018+P922
1540		1.000	ST		ANTI-CONDENSATIONHEATING	
1550	(-E95.1-X)	1.000	PC	3AXD50000010509	ASSEMBLY DRAWING HEATER 50 AND 100W	
1560	-E95.X	1.000	PC	3AFE09827498	HEATING EQUIPMENT SR50	HEATER 50W/220V(110-270VACDC)
1570	(-E95.X)	1.000	PC	3AUA0000066694	CONNECTOR SSL2.5 3043815	LOCKING ELEMENTS FOR ST-COMBI CONNECTOR
1580	(-E95.X)	1.000	PC	3AXD50000007033	CONNECTOR SC 2,5/ 2	2,50 mm2;24 A;500 V;2-POS. MALE
1590	(-E95.X)	1.000	PC	3AXD50000010133	ASSEMBLY PLATE HEATER	STEEL HDG 1,0;DEGREAS CLEAN
1600	WIRESET	1.000	PC	3AXD50000010440	WIRE HARNESS SET_HP_E95_FRAME_V1	__ - E95
1610	WIRESET	1.000	PC	3AXD50000010441	WIRE HARNESS SET_HP_E95_FRAME_V2	__ - E95
1620		1.000	ST		DSUMODULETERMINAL	
1630	-T1.1-X50	1.000	PC	3AUA0000059813	CONNECTOR STV S 9 SB	9 POLES, 32A 500V 6KV/3 (FEMALE)
1640	-T1.2-X50	1.000	PC	3AUA0000059813	CONNECTOR STV S 9 SB	9 POLES, 32A 500V 6KV/3 (FEMALE)

P345812 / 29711

Cust. Doc. No.	Prep.	Title PART LIST DSU ACS880-307-0910A-3 400V 50 Hz IP22	Item Des. = 01 +
Cust. Ref. No.	App.	SAP Doc. No.	
Customer WMMP	Project Zhaka Jack-up Lift System Zhaka Jack-up Lift System-1	EPLAN Doc. No. 3ABDC230674 - 01	
		ABB Ref. No.	Rev. / Sheet Part list_5
		Resp. Dept.	Cont. &EMA/1

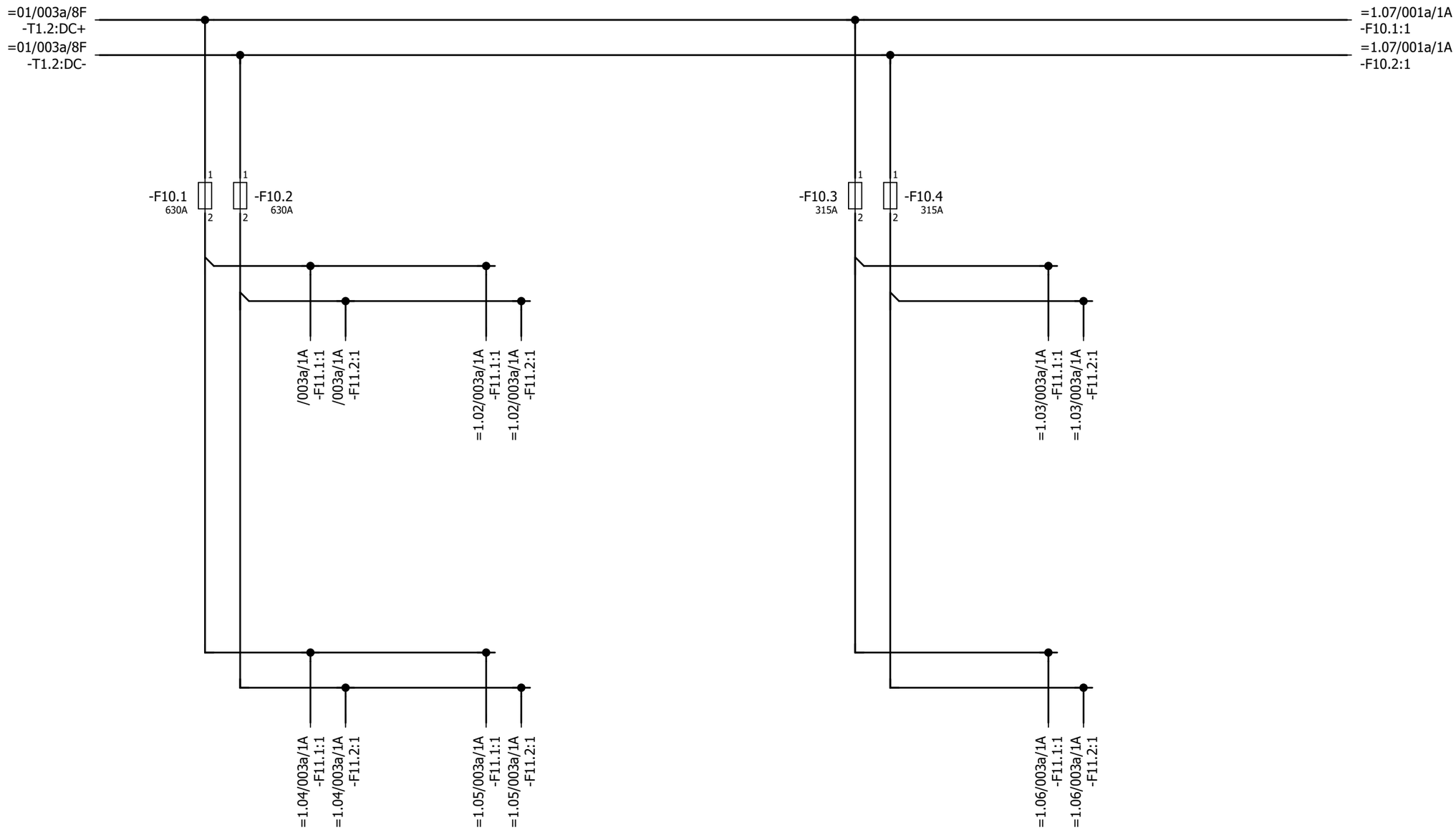

P345812 / 29711

Cust. Doc. No.	Prep. Sky-Xin Zhang 02.08.2023	Title MAIN CIRCUIT	Circuit diagram EFS2
Cust. Ref. No.	App.	INV1.01	SAP Doc. No.
Customer WMMP	Project Zhaka Jack-up Lift System	ACS880-107-0078A-3	EPLAN Doc. No. 3ABDC230674 - 1.01
	Zhaka Jack-up Lift System-1	400V	ABB Ref. No.
			Resp. Dept.

Item Des.
= 1.01
+ 1.01.1

Rev. .1 Sheet 001a
Cont. 003a

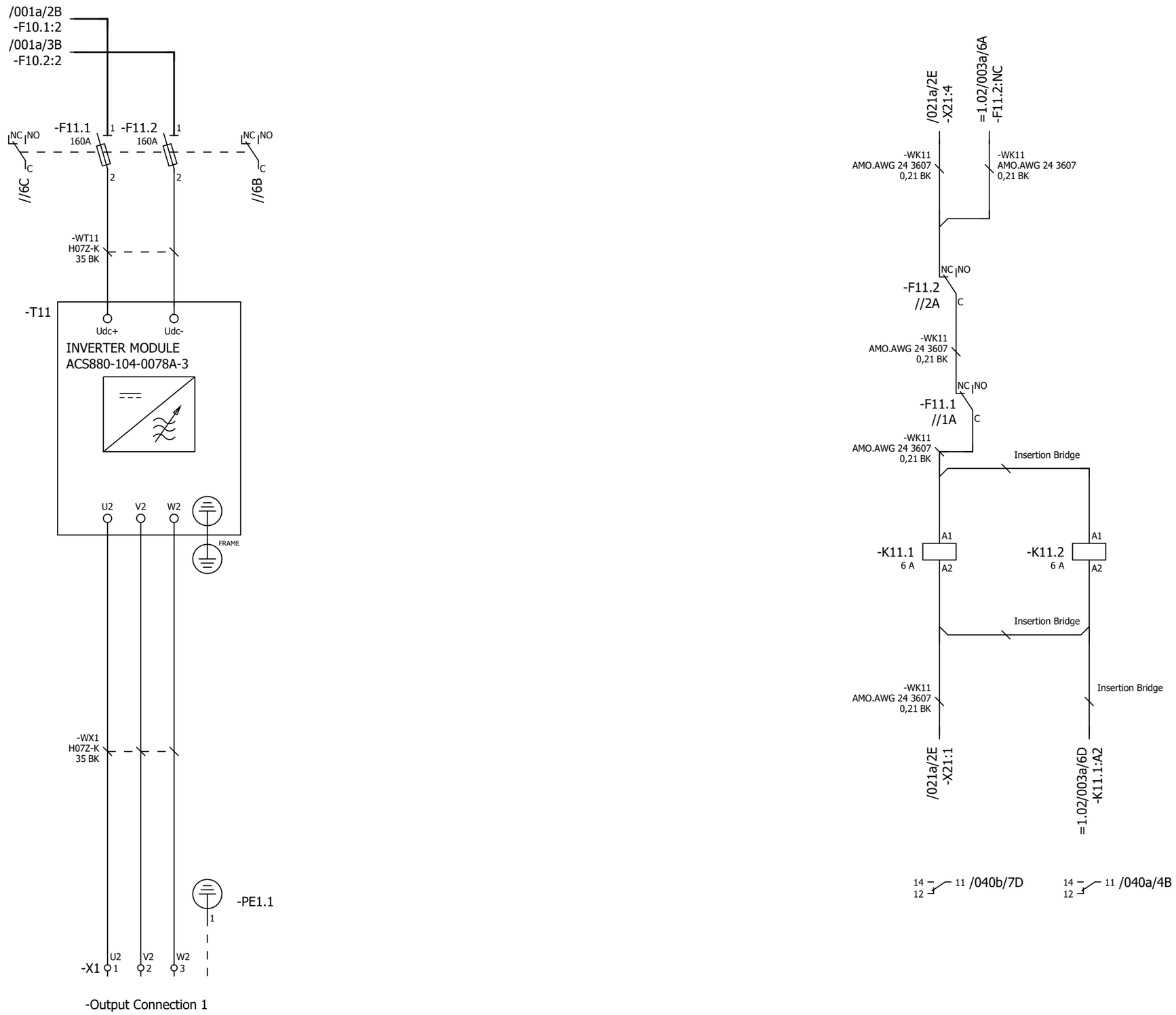

P345812 / 29711

Cust. Doc. No.	Prep. Sky-Xin Zhang 02.08.2023	Title MAIN CIRCUIT INV1.01 ACS880-107-0078A-3 400V	Circuit diagram EFS2
Cust. Ref. No.	App.		SAP Doc. No.
Customer WMMP	Project Zhaka Jack-up Lift System Zhaka Jack-up Lift System-1		EPLAN Doc. No. 3ABDC230674 - 1.01
			ABB Ref. No.
			Resp. Dept.

Item Des.
= 1.01
+ 1.01.1

Rev. .1 Sheet 003a
Cont. 020a

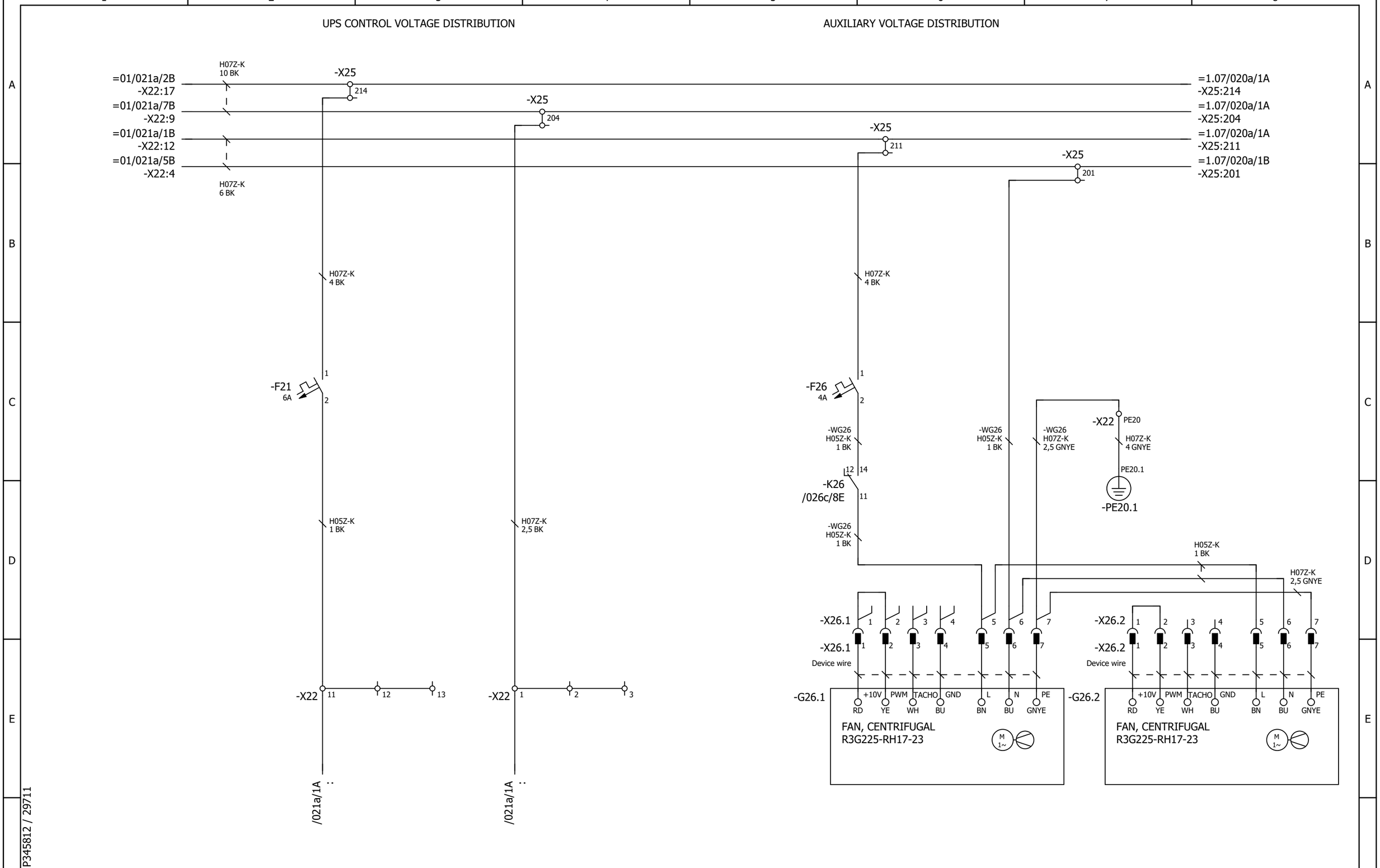

P345812 / 29711

Cust. Doc. No.	Prep. Sky-Xin Zhang 02.08.2023	Title AUXILIARY VOLTAGE DISTRIBUTION	Circuit diagram EFS2	Item Des.	
Cust. Ref. No.	App.	INV1.01	SAP Doc. No.	= 1.01	
Customer WMMP	Project Zhaka Jack-up Lift System	ACS880-107-0078A-3	EPLAN Doc. No. 3ABDC230674 - 1.01	+ 1.01.1	
	Zhaka Jack-up Lift System-1	400V	ABB Ref. No.	Rev. .1	Sheet 020a
			Resp. Dept.	Cont.	021a

24V CONTROL VOLTAGE DISTRIBUTION

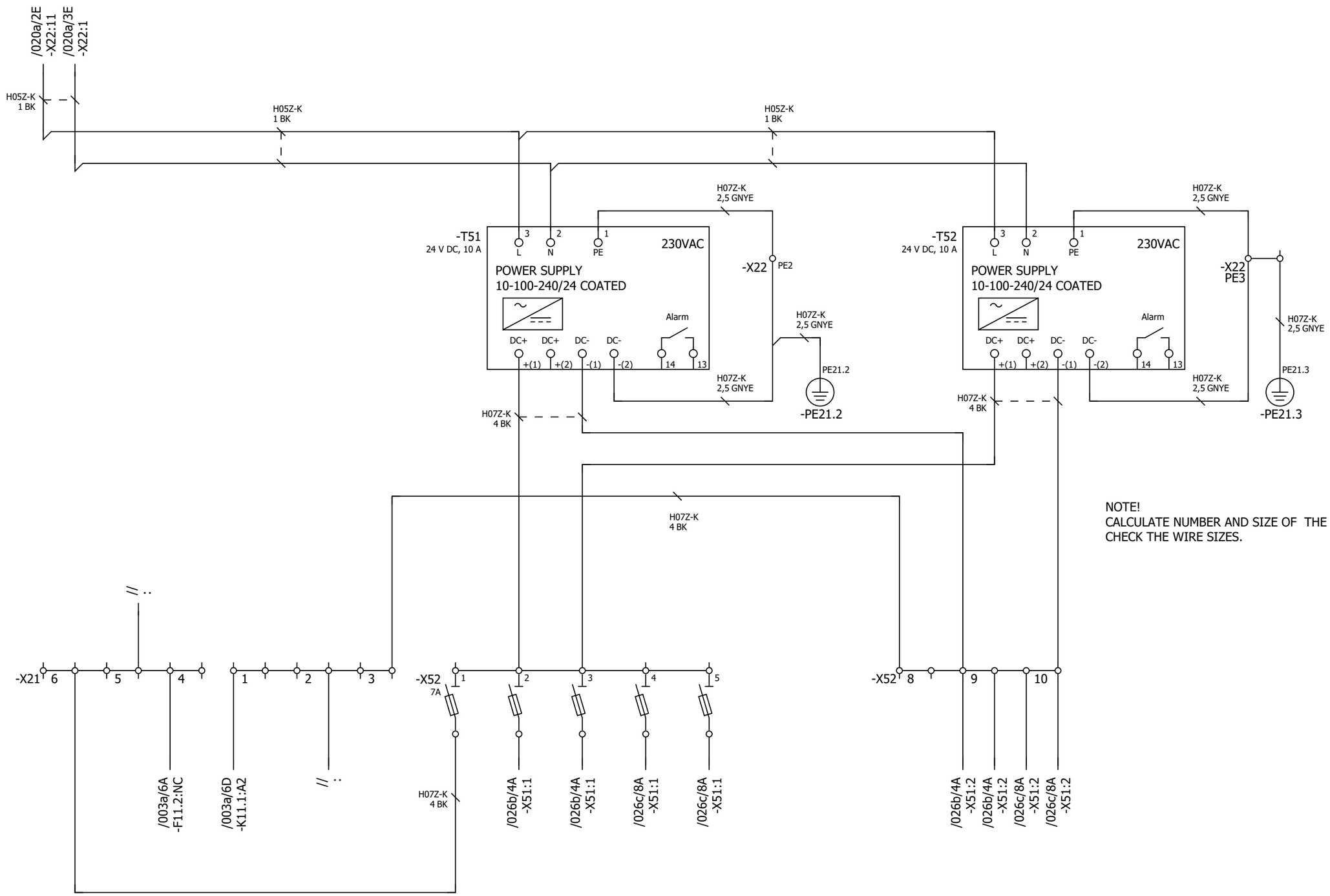

NOTE!
CALCULATE NUMBER AND SIZE OF THE POWER.
CHECK THE WIRE SIZES.

P345812 / 29711

Cust. Doc. No.	Prep. Sky-Xin Zhang 02.08.2023	Title AUXILIARY VOLTAGE DISTRIBUTION	Circuit diagram EFS2	Item Des.	
Cust. Ref. No.	App.	INV1.01	SAP Doc. No.	= 1.01	
Customer WMMP	Project Zhaka Jack-up Lift System	ACS880-107-0078A-3	EPLAN Doc. No. 3ABDC230674 - 1.01	+ 1.01.1	
	Zhaka Jack-up Lift System-1	400V	ABB Ref. No.	Rev. .1	Sheet 021a
			Resp. Dept.	Cont.	026a

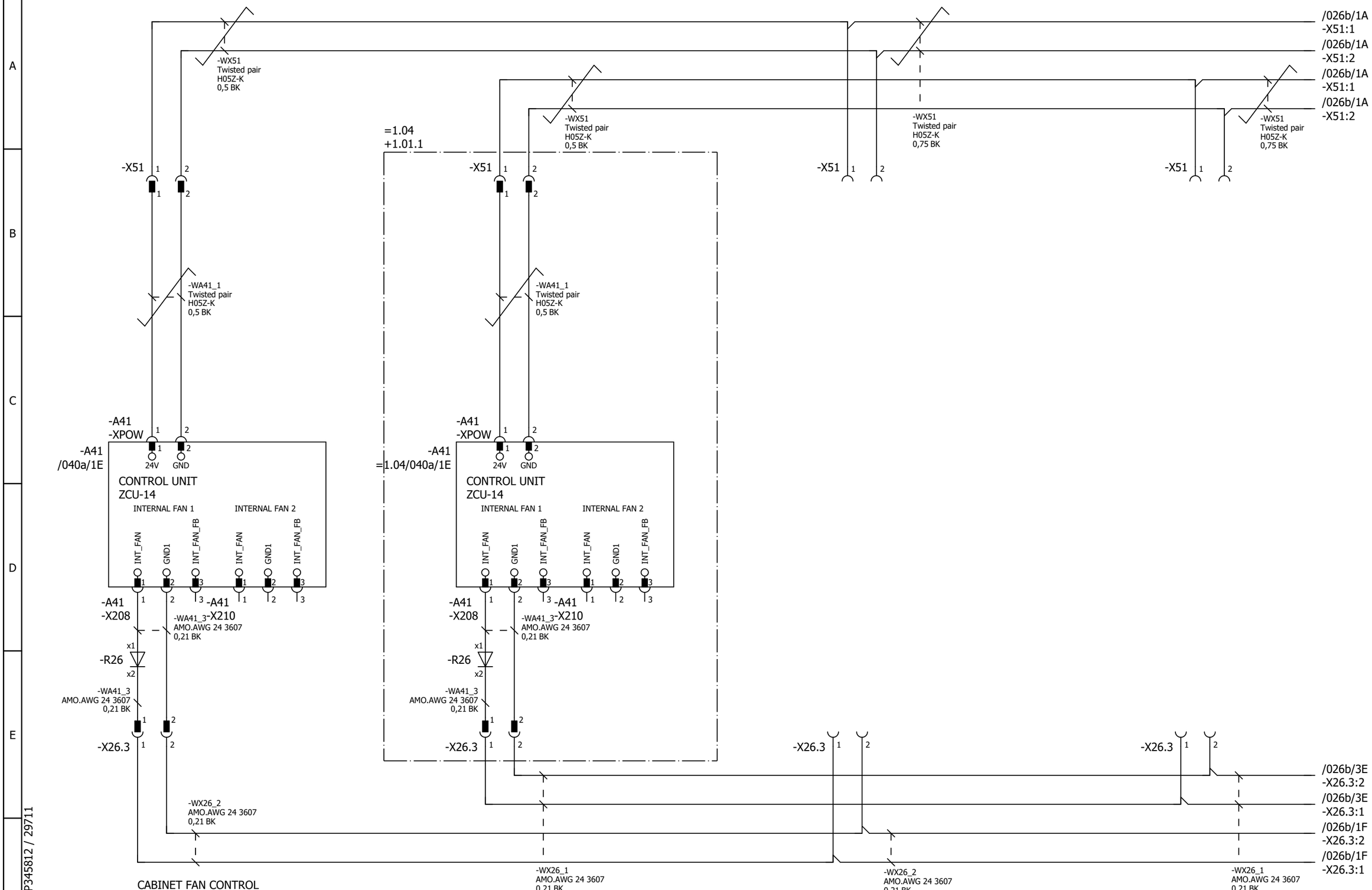

Cust. Doc. No.	Prep. Sky-Xin Zhang 02.08.2023	Title CABINET FAN CONTROL ZCU UPS, 24V FSO, FEA	Circuit diagram EFS2 / Item Des.
Cust. Ref. No.	App.	INV1.01	SAP Doc. No. / = 1.01
Customer WMMP	Project Zhaka Jack-up Lift System	ACS880-107-0078A-3	EPLAN Doc. No. 3ABDC230674 - 1.01 / + 1.01.1
	Zhaka Jack-up Lift System-1	400V	ABB Ref. No. / Rev. .1 / Sheet 026a
			Resp. Dept. / Cont. 026b

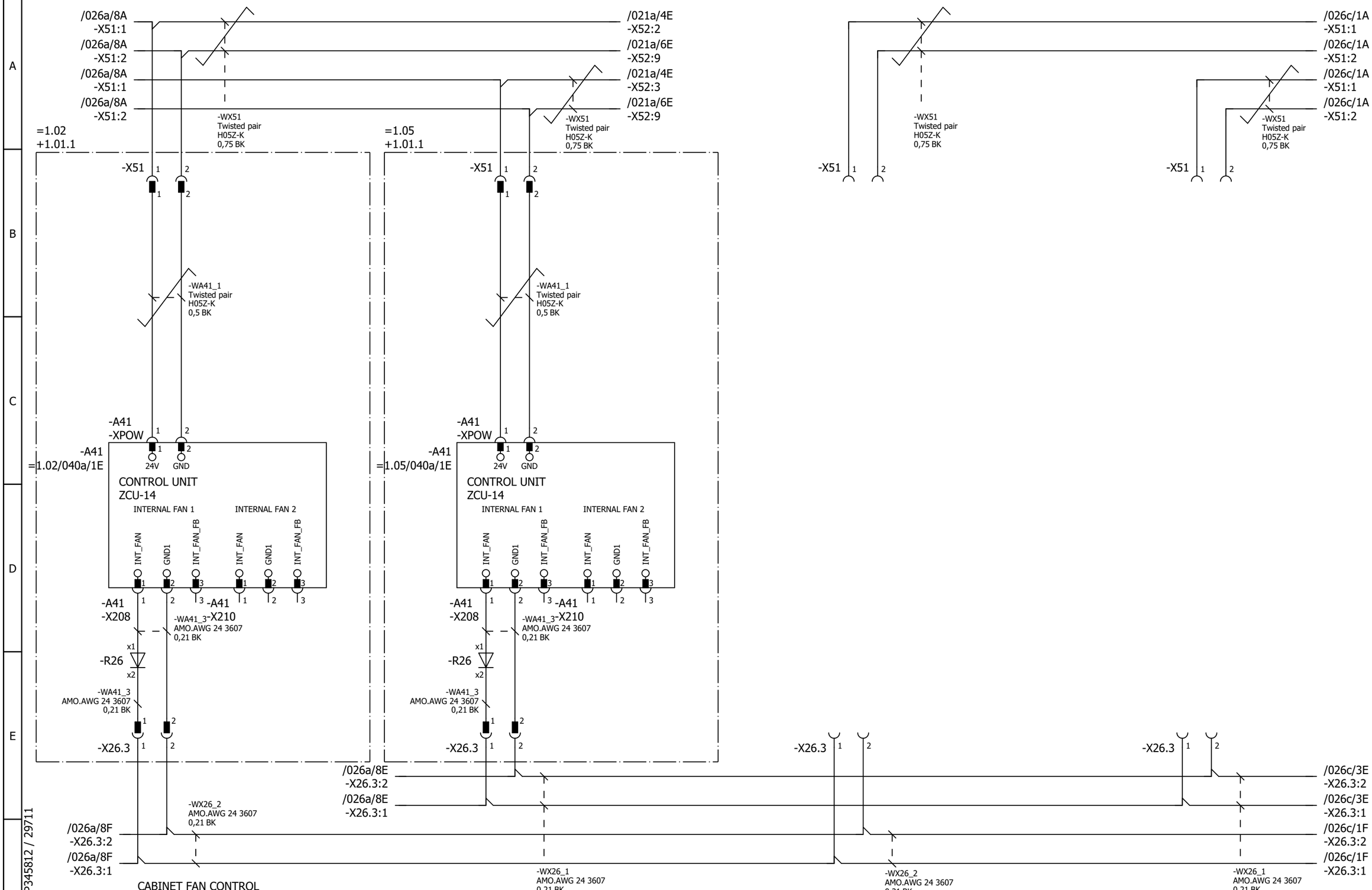

Cust. Doc. No.	Prep. Sky-Xin Zhang 02.08.2023	Title CABINET FAN CONTROL ZCU UPS, 24V FSO, FEA	Circuit diagram EFS2	Item Des.	
Cust. Ref. No.	App.	INV1.01	SAP Doc. No.	= 1.01	
Customer WMMP	Project Zhaka Jack-up Lift System	ACS880-107-0078A-3	EPLAN Doc. No. 3ABDC230674 - 1.01	+ 1.01.1	
		400V	ABB Ref. No.	Rev. .1	Sheet 026b
	Zhaka Jack-up Lift System-1		Resp. Dept.	Cont.	026c

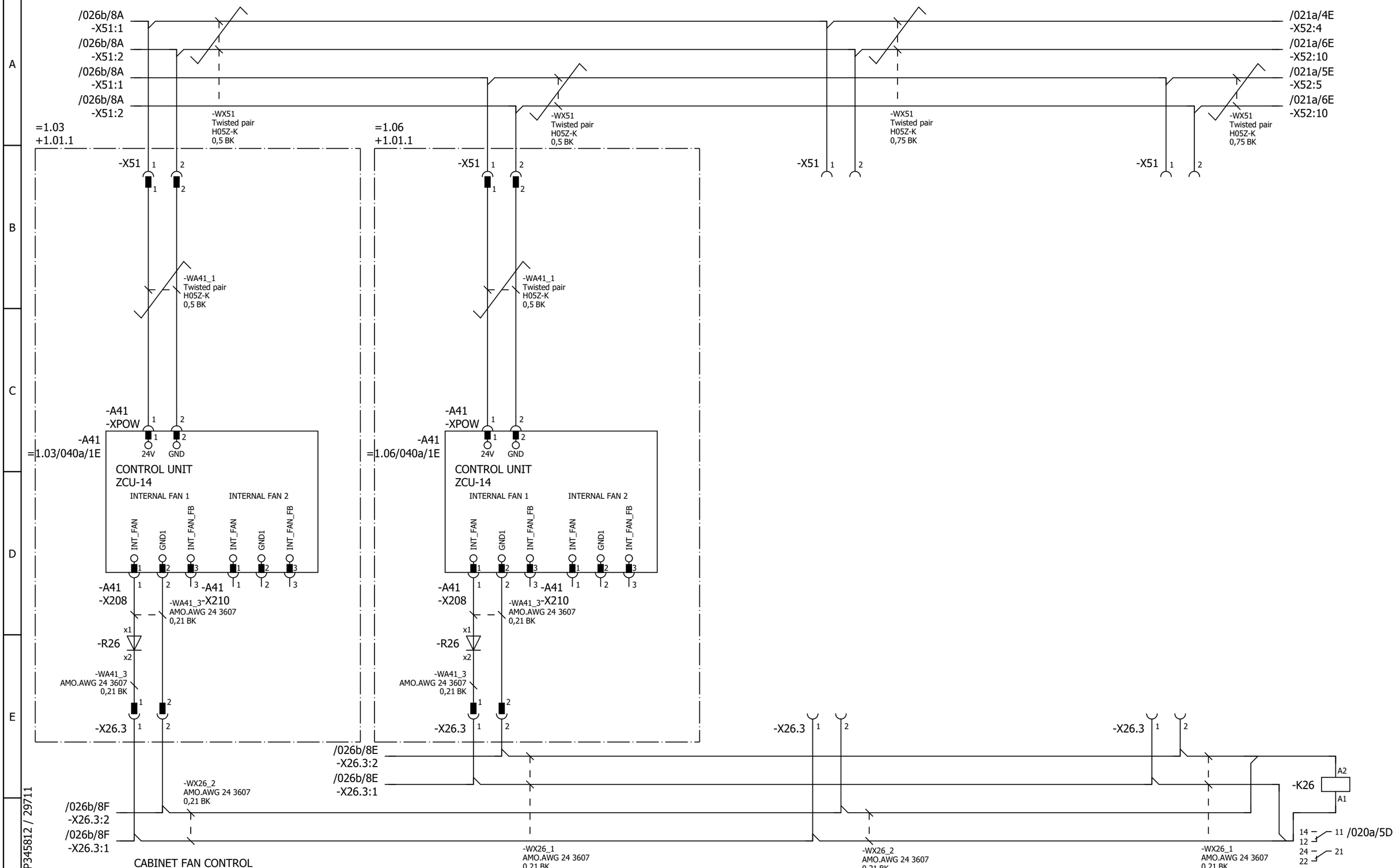

Cust. Doc. No.	Prep. Sky-Xin Zhang 02.08.2023	Title CABINET FAN CONTROL ZCU UPS, 24V FSO, FEA	Circuit diagram EFS2
Cust. Ref. No.	App.	INV1.01	SAP Doc. No.
Customer WMMP	Project Zhaka Jack-up Lift System	ACS880-107-0078A-3	EPLAN Doc. No. 3ABDC230674 - 1.01
	Zhaka Jack-up Lift System-1	400V	ABB Ref. No.
			Resp. Dept.

Item Des. = 1.01 + 1.01.1

Rev. .1 Sheet 026c

Cont. 040a

*) GEN.H05Z-K BK 1,0

Control and status signals	Terminal	Pin
E-STOP FEEDBACK 1 - ESTOP ACTIVE	-XRO1	12
RUNNING 1 - RUNNING	-XRO2	22
FAULT (-1) 1 - NO FAULT	-XRO3	32

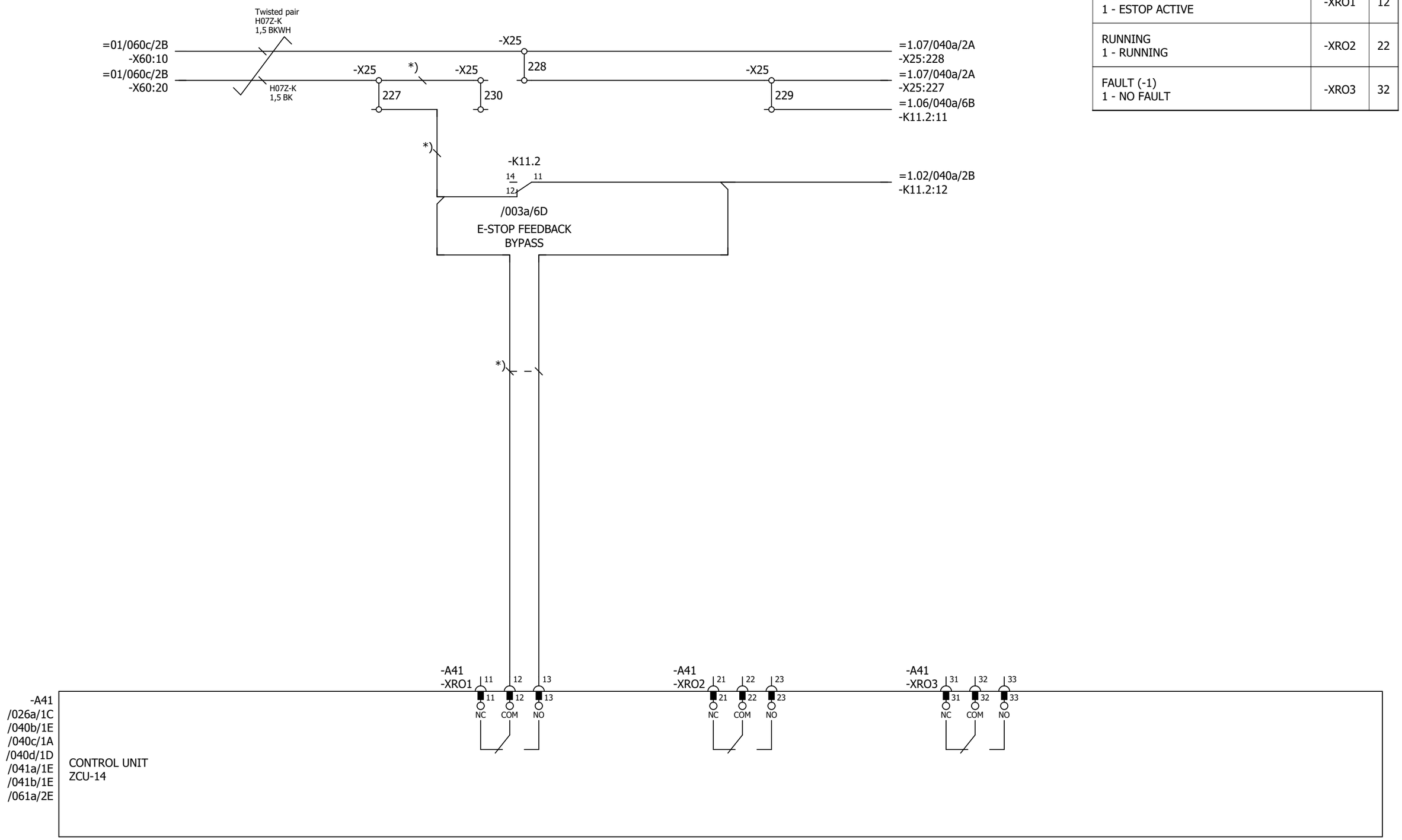

Cust. Doc. No.	Prep. Sky-Xin Zhang 02.08.2023	Title CONTROL BOARD INV1.01 ACS880-107-0078A-3 400V	Circuit diagram EFS2	Item Des. = 1.01 + 1.01.1
Cust. Ref. No.	App.		SAP Doc. No.	
Customer WMMP	Project Zhaka Jack-up Lift System Zhaka Jack-up Lift System-1		EPLAN Doc. No. 3ABDC230674 - 1.01	
			ABB Ref. No.	Rev. .1 Sheet 040a
			Resp. Dept.	Cont. 040b

Control and status signals	Terminal	Pin
DIGITAL INTERLOCK	-XD24	1
START/STOP 1 - START	-XDI	1
FORWARD/REVERSE 1 - REVERSE	-XDI	2
RESET	-XDI	3
EMERGENCY STOP 0 - ACTIVE	-XDI	4
NOT SPECIFIED	-XDI	5
DI6 NOT IN USE	-XDI	6
OUTPUT: READY	-XDIO	1
OUTPUT: RUNNING	-XDIO	2

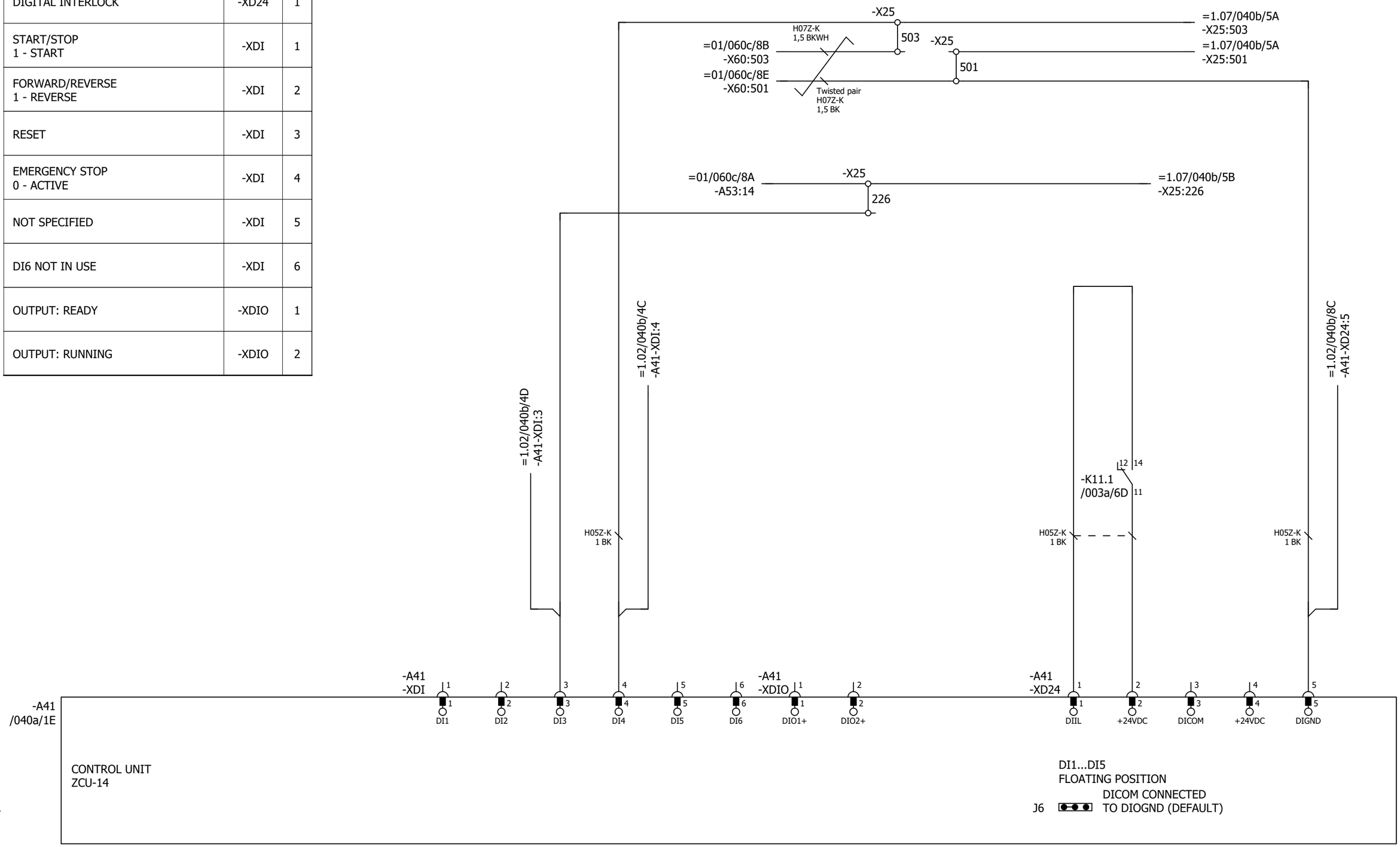

Cust. Doc. No.	Prep. Sky-Xin Zhang 02.08.2023	Title CONTROL BOARD INV1.01 ACS880-107-0078A-3 400V	Circuit diagram EFS2	Item Des.	
Cust. Ref. No.	App.		SAP Doc. No.	= 1.01 + 1.01.1	
Customer WMMP	Project Zhaka Jack-up Lift System Zhaka Jack-up Lift System-1		EPLAN Doc. No. 3ABDC230674 - 1.01		
			ABB Ref. No.	Rev. .1	Sheet 040b
			Resp. Dept.	Cont.	040c

Control and status signals	Terminal	Pin
MOTOR TEMP. MONITORING 0(2)…10V	-XAI	4
AI2 NOT SPECIFIED BY DEFAULT NOT IN USE 0(4)…20mA	-XAI	6
CURR SOU MOT TEMP MONIT 0(4)...20mA	-XAO	1
CURRENT 0(4)…20mA ↔ 0(4)…MOTOR CURRENT	-XAO	3

P345812 / 29711

Cust. Doc. No.	Prep. Sky-Xin Zhang 02.08.2023	Title CONTROL BOARD INV1.01 ACS880-107-0078A-3 400V	Circuit diagram EFS2
Cust. Ref. No.	App.		SAP Doc. No.
Customer WMMP	Project Zhaka Jack-up Lift System Zhaka Jack-up Lift System-1		EPLAN Doc. No. 3ABDC230674 - 1.01
			ABB Ref. No.
			Resp. Dept.

Item Des.
= 1.01
+ 1.01.1

Rev. .1 Sheet 040c
Cont. 040d

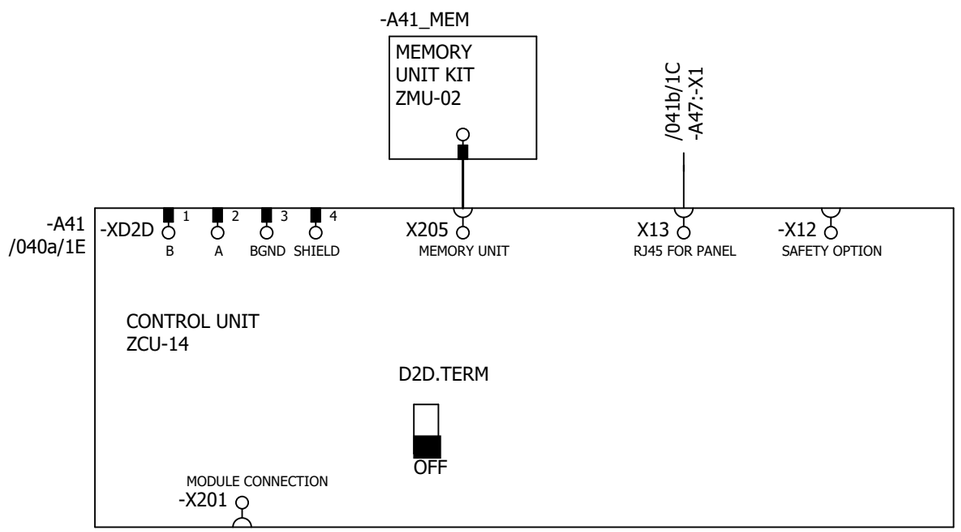

P345812 / 29711

Cust. Doc. No.	Prep. Sky-Xin Zhang 02.08.2023	Title CONTROL BOARD INV1.01 ACS880-107-0078A-3 400V	Circuit diagram EFS2
Cust. Ref. No.	App.		SAP Doc. No.
Customer WMMP	Project Zhaka Jack-up Lift System Zhaka Jack-up Lift System-1		EPLAN Doc. No. 3ABDC230674 - 1.01
			ABB Ref. No.
			Resp. Dept.

Item Des.
= 1.01
+ 1.01.1

Rev. .1 Sheet 040d
Cont. 041a

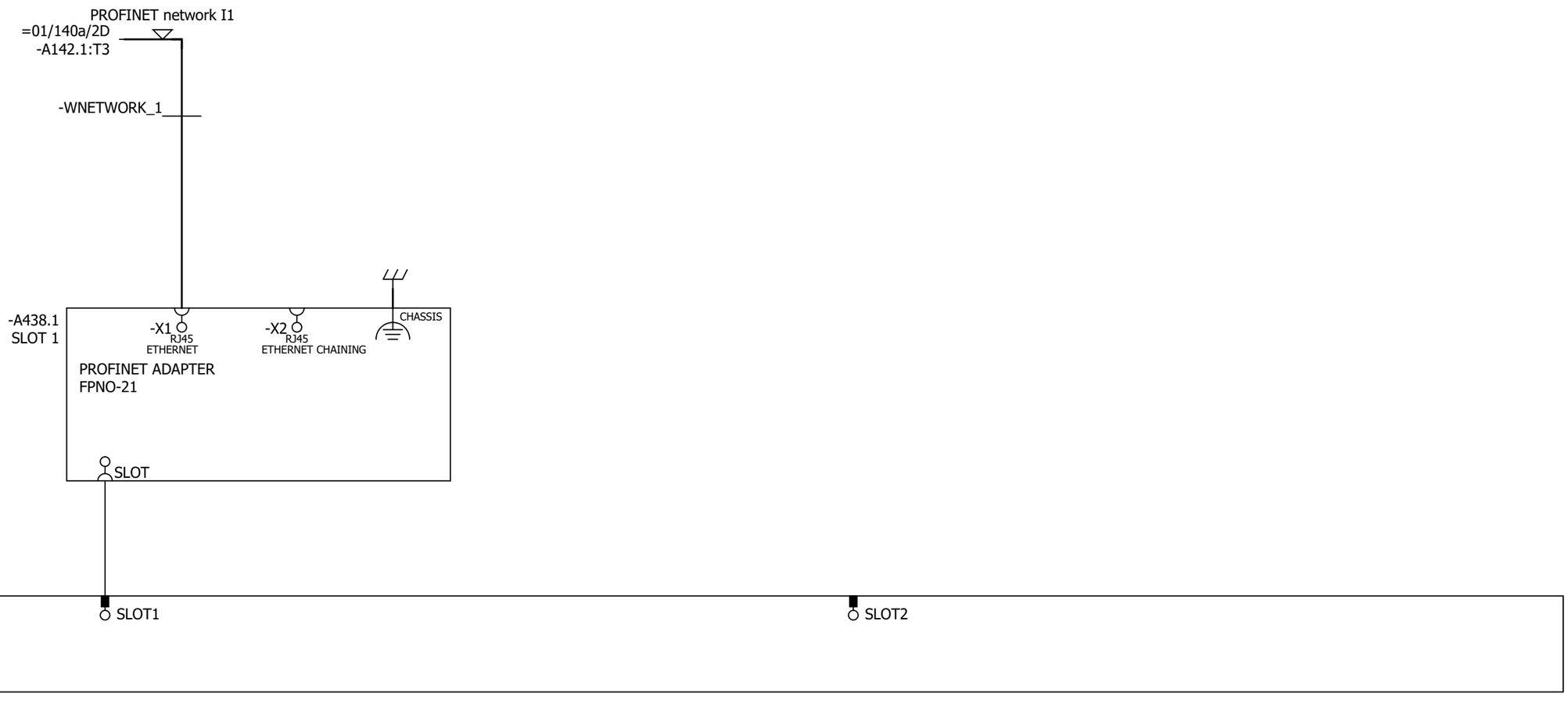

Cust. Doc. No.	Prep. Sky-Xin Zhang 02.08.2023	Title OPTION CARDS	Circuit diagram EFS2	Item Des.	
Cust. Ref. No.	App.	INV1.01	SAP Doc. No.	= 1.01	
Customer WMMP	Project Zhaka Jack-up Lift System	ACS880-107-0078A-3	EPLAN Doc. No. 3ABDC230674 - 1.01	+ 1.01.1	
	Zhaka Jack-up Lift System-1	400V	ABB Ref. No.	Rev. .1	Sheet 041a
			Resp. Dept.	Cont.	041b

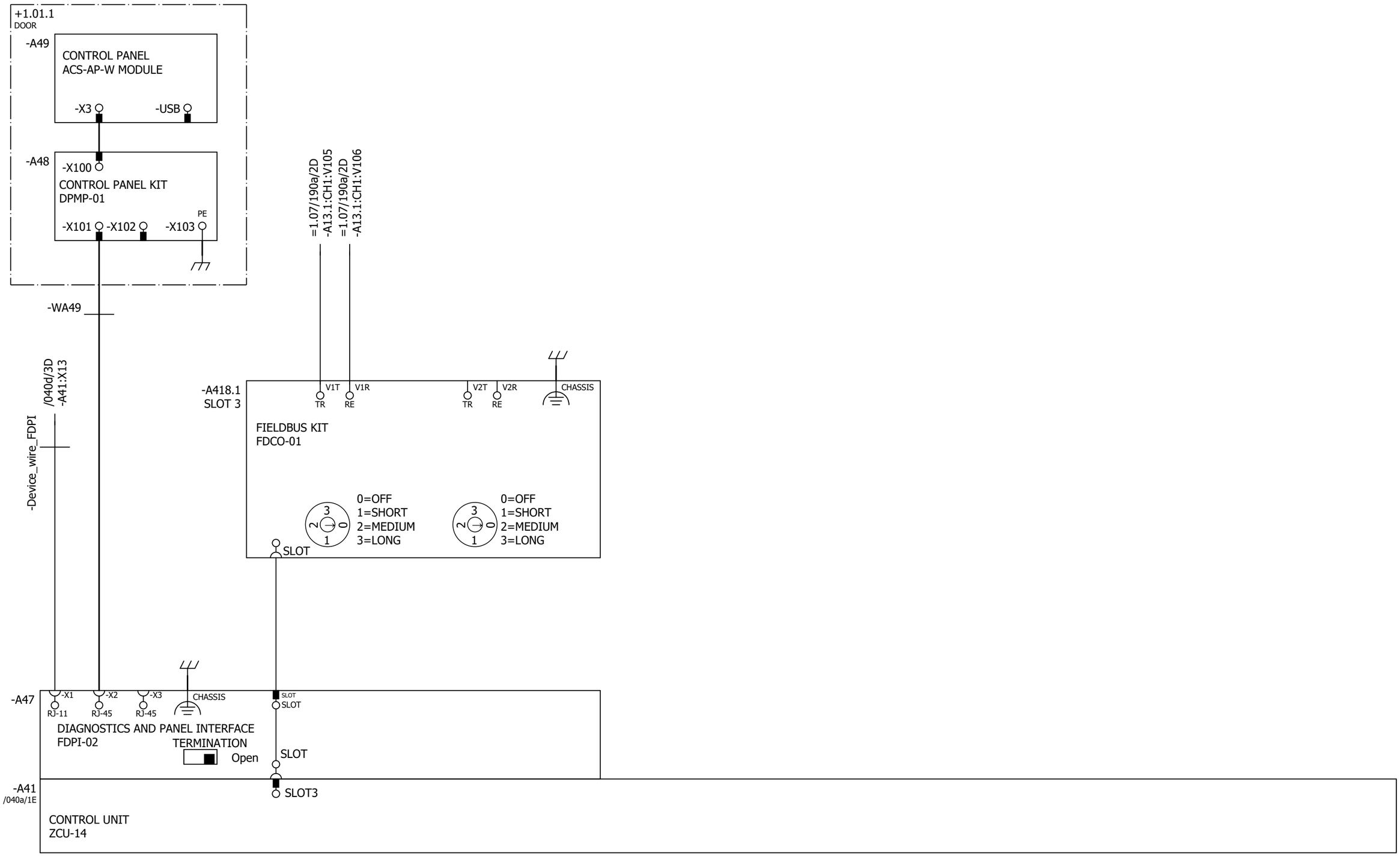

Cust. Doc. No.	Prep. Sky-Xin Zhang 02.08.2023	Title OPTION CARDS	Circuit diagram EFS2	Item Des.
Cust. Ref. No.	App.	INV1.01	SAP Doc. No.	= 1.01
Customer WMMP	Project Zhaka Jack-up Lift System	ACS880-107-0078A-3	EPLAN Doc. No. 3ABDC230674 - 1.01	+ 1.01.1
	Zhaka Jack-up Lift System-1	400V	ABB Ref. No.	Rev. .1 Sheet 041b
			Resp. Dept.	Cont. 061a

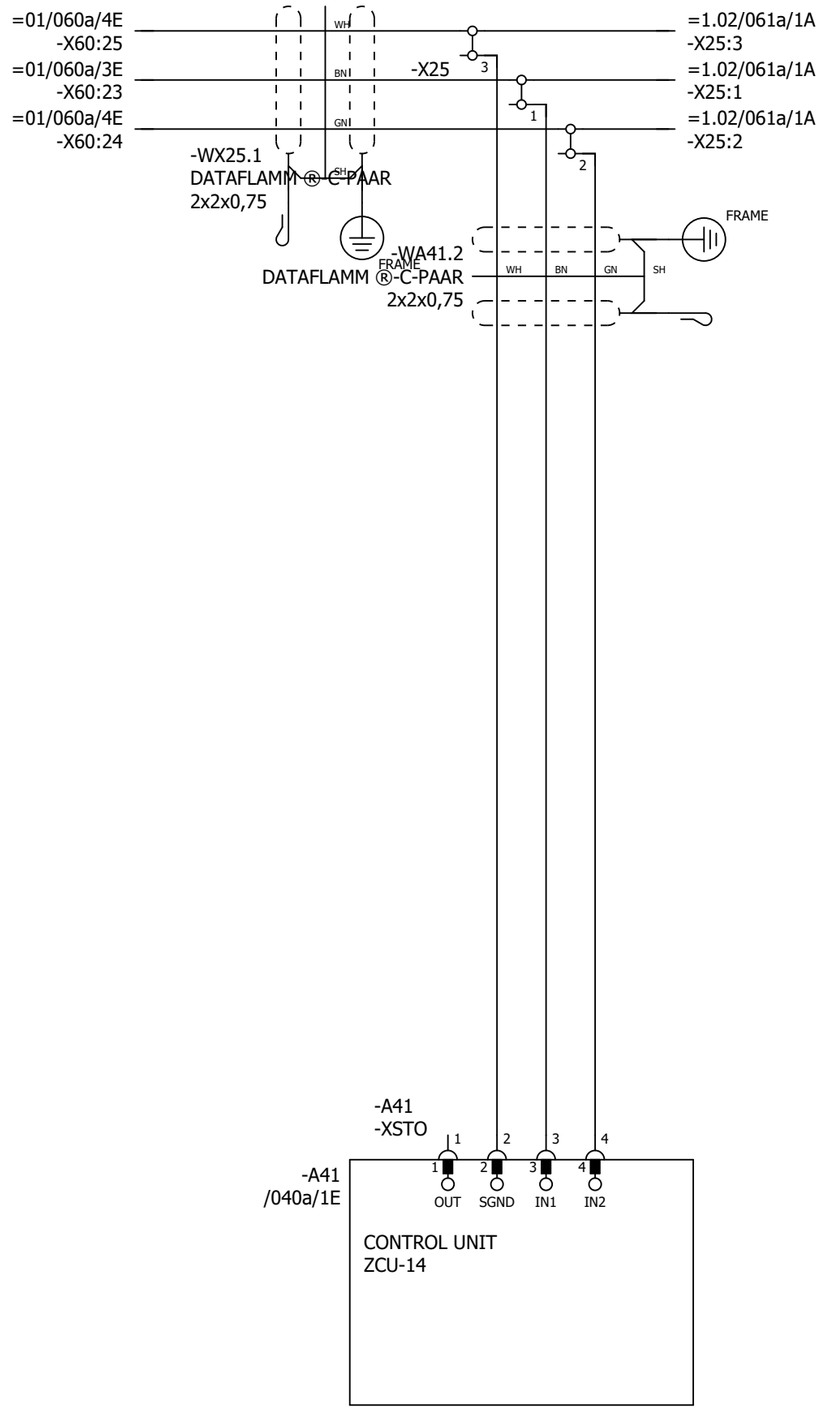

P345812 / 29711

SAFETY CIRCUIT
MACRO REVISION 6
RULES CONVERTED 19.7.2023

Cust. Doc. No.	Prep. Sky-Xin Zhang 02.08.2023	Title SAFETY CIRCUIT	Circuit diagram EFS2
Cust. Ref. No.	App.	INV1.01	SAP Doc. No.
Customer WMMP	Project Zhaka Jack-up Lift System	ACS880-107-0078A-3	EPLAN Doc. No. 3ABDC230674 - 1.01
	Zhaka Jack-up Lift System-1	400V	ABB Ref. No. / Resp. Dept.

Item Des.
= 1.01
+ 1.01.1

Rev. .1 Sheet 061a
Cont. 095a

CABINET
HEATING

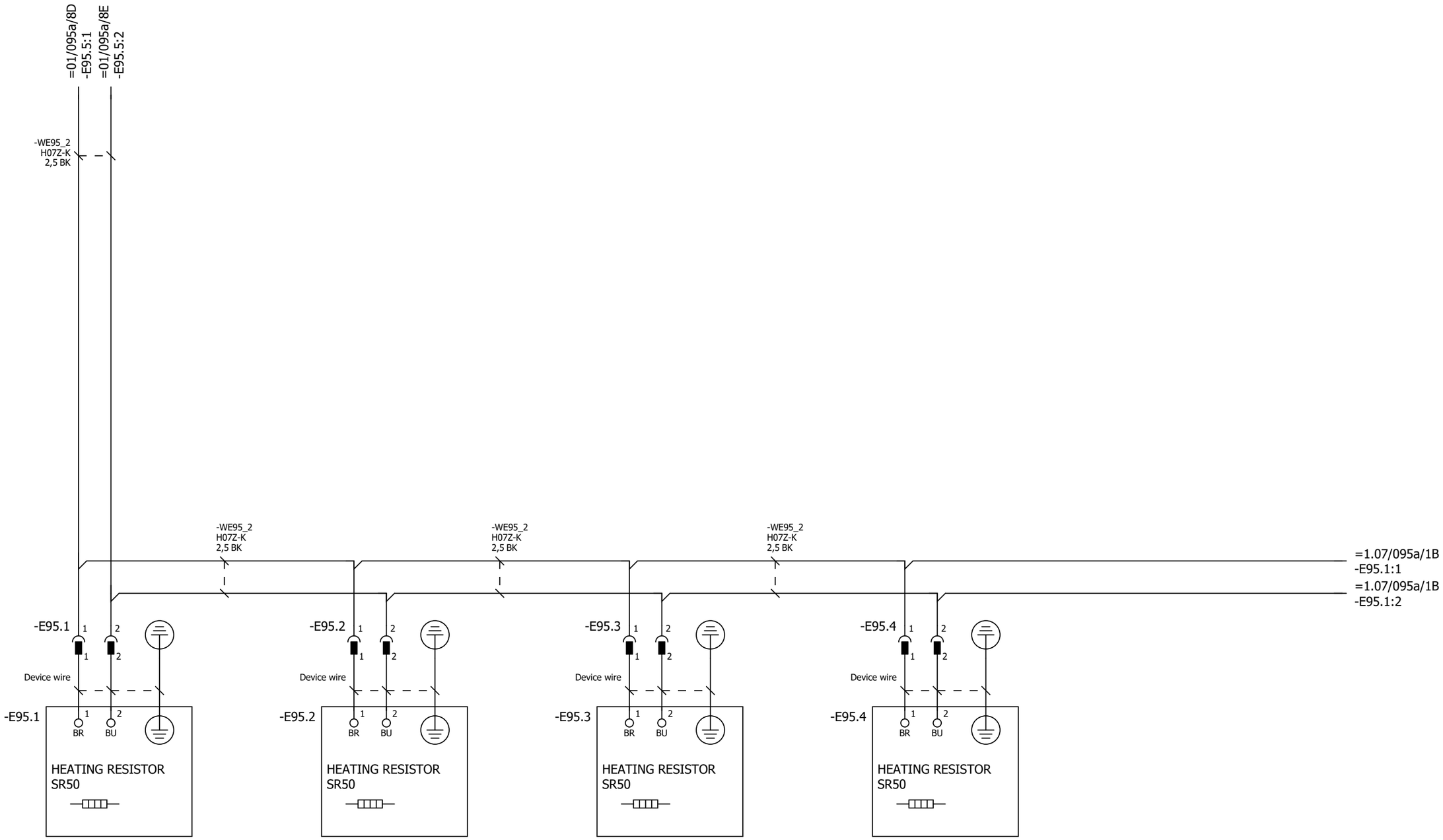

P345812 / 29711

Cust. Doc. No.	Prep. Sky-Xin Zhang 02.08.2023	Title CABINET HEATING	Circuit diagram EFS2	Item Des.	
Cust. Ref. No.	App.	INV1.01	SAP Doc. No.	= 1.01	
Customer WMMP	Project Zhaka Jack-up Lift System	ACS880-107-0078A-3	EPLAN Doc. No. 3ABDC230674 - 1.01	+ 1.01.1	
	Zhaka Jack-up Lift System-1	400V	ABB Ref. No.	Rev. .1	Sheet 095a
			Resp. Dept.	Cont.	&MPC/Part list_1

Part list: 3ABDC230674DU01001

Item	Sort String	Qty.Str	Unit	Component Number	Description and text	Technical data
0010		1.000	ST		ACS880-107-0078A-3+A012+B053+C121+C132+	
0020		1.000	ST		_C206+E210+F272+F287+F288+G300+G307+G315	
0030		1.000	ST		_+G320+G330+G344+H352+H367+J400+K492+K49	
0040		1.000	ST		_3+L503+P913+Q964	
0050		1.000	ST		=1.01	
0060		1.000	ST		+1.01.1,INU3	
0070		1.000	ST		Powerconversionequipment	
0080	-A41_MEM	1.000	PC	3AXD50000006010	MEMORY UNIT KIT ZMU-02	
0090	-T11	1.000	PC	3AUA0000120009-M	ACS880-104-0078A-3+P922	+P922
0100	SCREW	1.000	PC	3AFE68681481	SCREW K30X10 TORX	PT WN1452 ZN
0110	SOFTWARE	1.000	PC	3AUA0000153462	SOFTWARE PRIMARY CONTROL PROGRA	AINF6 FOR ZCU-12/14
0120		1.000	ST		R4imoduleDCfuse	
0130	-F11.1-2	2.000	PC	3AXD50000000219	FUSE FR27UQ69V160T/160A	6.921 CP URQ 27X60MM FERRULE;AR
0140		1.000	ST		R3i-R4imoduleDCfusebase	
0150	(-F11.1-2)	2.000	PC	3AUA0000089227	FUSE HOLDER FUSE BASE US271MI 150A	FUSE BASE US271MI 150A 800V
0160		1.000	ST		motorterminalR4i,coppercable	
0170	-X1	1.000	PC	3ABD50000000270	CONNECTOR PPAC-50	50 MM2;150 A;800V
0180	-X1	1.000	PC	3ABD50000000270	CONNECTOR PPAC-50	50 MM2;150 A;800V
0190	-X1	1.000	PC	3ABD50000000270	CONNECTOR PPAC-50	50 MM2;150 A;800V
0200		1.000	ST		24VDCsupplyZCU	
0210	-WA41_1	1.000	PC	3AXD50000005218	WIRE HARNESS 24VDC SUPPLY X51 ZCU V	HALOGEN FREE;X51_A51
0220		1.000	ST		Rooffancontrol	
0230	-WA41_3	1.000	PC	3AXD50000002688	WIRE HARNESS FAN CONTROL MAIN WIRE	HALOGEN FREE;X208_X26.3
0240		1.000	ST		Toprowmodulewireharness	
0250	-WT11	1.000	PC	3AXD50000002256	WIRE HARNESS R4I FUSE_MODULE V2	HALOGEN FREE;MAIN CIRCUIT WIRE SET
0260	-WX1	1.000	PC	3AXD50000002258	WIRE HARNESS R4I MODULE_OUTPUT TR V	HALOGEN FREE;MAIN CIRCUIT WIRE SET
0270		1.000	ST		Optionmodule	
0280	-A418.1	1.000	PC	3AUA0000107392	COMMUNIC. ADAPTER FDCO-01	
0290		1.000	ST		Controlpanel	
0300	-A47	1.000	PC	3AUA0000108650	FIELDBUS KIT FDPI-02	PANEL BUS ADAPTER
0310	-A48	1.000	PC	3AUA0000108878	CONTROL PANEL KIT DPMP-01	DPMP-01
0320	-A49	1.000	PC	3AXD50000025964	CONTROL PANEL ACS-AP-W MODULE	ASSISTANT PANEL WIRELESS CPU1
0330		1.000	ST		DCfusesupervision	

P345812 / 29711

Cust. Doc. No.	Prep.	Title PART LIST INV1.01 ACS880-107-0078A-3 400V	Item Des. = 1.01 +
Cust. Ref. No.	App.		SAP Doc. No.
Customer WMMP	Project Zhaka Jack-up Lift System Zhaka Jack-up Lift System-1		EPLAN Doc. No. 3ABDC230674 - 1.01
			ABB Ref. No. / Rev. / Sheet Part list_1
			Resp. Dept. / Cont. Part list_2

Part list: 3ABDC230674DU01001

Item	Sort String	Qty.Str	Unit	Component Number	Description and text	Technical data
0340	-K11.1-2	2.000	PC	3AXD50000021313	RELAY DEK_REL_G24/21	250 V;6 A;COIL 24VDC
0350	-WK11	1.000	PC	3AXD50000003220	WIRE HARNESS 6 MODULE 800MM CABINET	HALOGEN FREE;DC FUSE SUPERVISION
0360	-WK11	1.000	PC	3AXD50000003227	WIRE HARNESS 1ST MODULE SUPERV 800M	HALOGEN FREE;DC FUSE SUPERVISION
0370	-WK11	1.000	PC	3AXD50000003228	WIRE HARNESS 2ND MODULE SUPERV 800M	HALOGEN FREE;DC FUSE SUPERVISION
0380	-WK11	1.000	PC	3AXD50000003229	WIRE HARNESS 3RD MODULE SUPERV 800M	HALOGEN FREE;DC FUSE SUPERVISION
0390	-WK11	1.000	PC	3AXD50000003230	WIRE HARNESS 4TH MODULE SUPERV 800M	HALOGEN FREE;DC FUSE SUPERVISION
0400	-WK11	1.000	PC	3AXD50000003231	WIRE HARNESS 5TH MODULE SUPERV 800M	HALOGEN FREE;DC FUSE SUPERVISION
0410	-WK11	1.000	PC	3AXD50000003232	WIRE HARNESS 6TH MODULE SUPERV 800M	HALOGEN FREE;DC FUSE SUPERVISION
0420		1.000	ST		Profinetswitch	
0430		1.000	ST		FieldBus	
0440	-A438.1	1.000	PC	3AXD50000192779	OPTION MODULE FPNO-21	PROFINET IO
0450		1.000	ST		Supplementtorelay	
0460	(-K11.1)	1.000	PC	3AXD50000021312	TERMINAL BLOCK ST EB2_DIK_RD 2716693	2POLE, 6,15 MM PITCH;FOR DEK RELAYS
0470		1.000	ST		CommonDCfuse	
0480	-F10.1-2	2.000	PC	3AXD50000000246	FUSE 170M4416	630 A;690 V;DIN1 FLUSH END;AR;200KA
0490	-F10.3-4	2.000	PC	3AXD50000000234	FUSE 170M4410	315 A;690 V;DIN1 FLUSH END;AR;200KA
0500		1.000	ST		Cabinetfan	
0510	-F26	1.000	PC	3AFE68264758	PROTECTION SWITCH S 201-K4	4A, 440VAC/60VDC
0520	-G26.1	1.000	PC	3AXD50000000592	FAN R3G225-RH17-23	230V;96W;50HZ;60HZ;0,77A;1080M3S CCC,UL
0530	-G26.2	1.000	PC	3AXD50000000592	FAN R3G225-RH17-23	230V;96W;50HZ;60HZ;0,77A;1080M3S CCC,UL
0540	-K26	1.000	PC	3AUA0000102191	RELAY RCL425024-SOCKET-DIODE	8 A;24 V;24VDC, 2C/O
0550	-X26.1	1.000	PC	3AXD50000000723	TERMINAL BLOCK AS X26 FAN SUPPLY PLUG	12,00 AWG;2,50 mm2;24,00 A;500,00 V
0560	(-X26.1)	1.000	PC	3AXD50000000724	TERMINAL BLOCK AS X26 FAN SUPPLY SOCKET	12,00 AWG;2,50 mm2;24,00 A;500,00 V
0570	-X26.2	1.000	PC	3AXD50000000723	TERMINAL BLOCK AS X26 FAN SUPPLY PLUG	12,00 AWG;2,50 mm2;24,00 A;500,00 V
0580	(-X26.2)	1.000	PC	3AXD50000000724	TERMINAL BLOCK AS X26 FAN SUPPLY SOCKET	12,00 AWG;2,50 mm2;24,00 A;500,00 V
0590		1.000	ST		Auxvoltagedistribution	
0600	-X22	1.000	PC	3AXD50000001632	TERMINAL BLOCK AS X22	12 AWG;2 mm2;24 A;800 V
0610	-X25	1.000	PC	3AXD50000001609	TERMINAL BLOCK AS X25 (1)	6 AWG;10 mm2;57 A;800 V
0620	-X25	1.000	PC	3ABD00609550	ASSEMBLY PLATE FOR X25 TERMINAL	acs880
0630		1.000	ST		EMSTOPterminalblock	
0640	-X25	1.000	PC	3AXD50000001610	TERMINAL BLOCK AS X25 (2)	12 AWG;2 mm2;24 A;500 V
0650		1.000	ST		STOterminalblock	
0660	-X25	1.000	PC	3AXD50000001631	TERMINAL BLOCK AS X60	12 AWG;2 mm2;24 A;500 V

P345812 / 29711

Cust. Doc. No.	Prep.	Title PART LIST INV1.01 ACS880-107-0078A-3 400V	Item Des. = 1.01 +
Cust. Ref. No.	App.		SAP Doc. No.
Customer WMMP	Project Zhaka Jack-up Lift System Zhaka Jack-up Lift System-1		EPLAN Doc. No. 3ABDC230674 - 1.01
			ABB Ref. No. / Rev. / Sheet Part list_2
			Resp. Dept. / Cont. Part list_3

Part list: 3ABDC230674DU01001

Item	Sort String	Qty.Str	Unit	Component Number	Description and text	Technical data
0670		1.000	ST		24vDCdistributionwithUPS	
0680	-F21	1.000	PC	3AFE68264766	PROTECTION SWITCH S 201-K6	S 201-K6
0690		1.000	ST		24VDCsupply	
0700	-WX51	1.000	PC	3AXD50000005214	WIRE HARNESS 24VDC SUPPLY 800MM V2	HALOGEN FREE;X52_X51
0710		1.000	ST		Cabinetrooffansupply	
0720	-WG26	1.000	PC	3AXD50000036922	WIRE HARNESS CABINET ROOF FAN SUPPL	R1I-R4I 800/1000MM
0730		1.000	ST		Cabinetrooffancontrol	
0740	-WX26_1	1.000	PC	3AXD50000005080	WIRE HARNESS 800MM CABINET LOWER RO	HALOGEN FREE;X26.3_X26.4
0750	-WX26_2	1.000	PC	3AXD50000005078	WIRE HARNESS 800MM CABINET UPPER RO	HALOGEN FREE;X26.3_K26
0760		1.000	ST		24VDCdistribution	
0770	-F52.1-5	5.000	PC	3AXD50000005465	FUSE MDL-7-R	7 A;250 V;¼" x 1¼";GLASS TUBE;TIME-DELAY
0780	-T22	1.000	PC	3ABD00010542	POWER SUPPLY NDR-120-24	24V 5A
0790	-X21	1.000	PC	3AXD50000001633	TERMINAL BLOCK AS X21	12 AWG;2 mm2;24 A;800 V
0800	-X52	1.000	PC	3AXD50000005221	TERMINAL BLOCK AS 24VDC X52 TERM BLOCK 5	10 AWG;4 mm2;10 A;500 V;fuse size 6,3x32
0810		1.000	ST		24vDCdistribution	
0820	-T51	1.000	PC	3ABD00010602	POWER SUPPLY NDR-240-24	24V 10A
0830	-T52	1.000	PC	3ABD00010602	POWER SUPPLY NDR-240-24	24V 10A
0840		1.000	ST		Cabinetheaters	
0850	-E95.1-4	4.000	PC	3AFE09827498	HEATING EQUIPMENT SR50	HEATER 50W/220V(110-270VACDC)
0860	(-E95.1-4)	4.000	PC	3AXD50000010133	ASSEMBLY PLATE HEATER	STEEL HDG 1,0;DEGREAS CLEAN
0870	(-E95.1-4)	1.000	PC	3AXD50000010509	ASSEMBLY DRAWING HEATER 50 AND 100W	
0880	X95.1A-4A	4.000	PC	3AXD50000007033	CONNECTOR SC 2,5/ 2	2,50 mm2;24 A;500 V;2-POS. MALE
0890	X95.1B-4B	4.000	PC	3AUA0000066694	CONNECTOR SSL2.5 3043815	LOCKING ELEMENTS FOR ST-COMBI CONNECTOR
0900		1.000	ST		Supplementforrelay	
0910	(-K11)	2.000	PC	3AXD50000021311	CONNECTOR EB 10-DIK RD 2716774	10POLE, 6,15 MM PITCH;FOR DEK RELAYS
0920	(-K11)	1.000	PC	3AXD50000021314	RELAY D-DEK_1,5_GN	end plate

P345812 / 29711

Cust. Doc. No.	Prep.	Title PART LIST INV1.01 ACS880-107-0078A-3 400V	Item Des. = 1.01 +
Cust. Ref. No.	App.		SAP Doc. No.
Customer WMMP	Project Zhaka Jack-up Lift System Zhaka Jack-up Lift System-1		EPLAN Doc. No. 3ABDC230674 - 1.01
			ABB Ref. No. / Rev. / Sheet Part list_3
			Resp. Dept. / Cont. &EMA/1

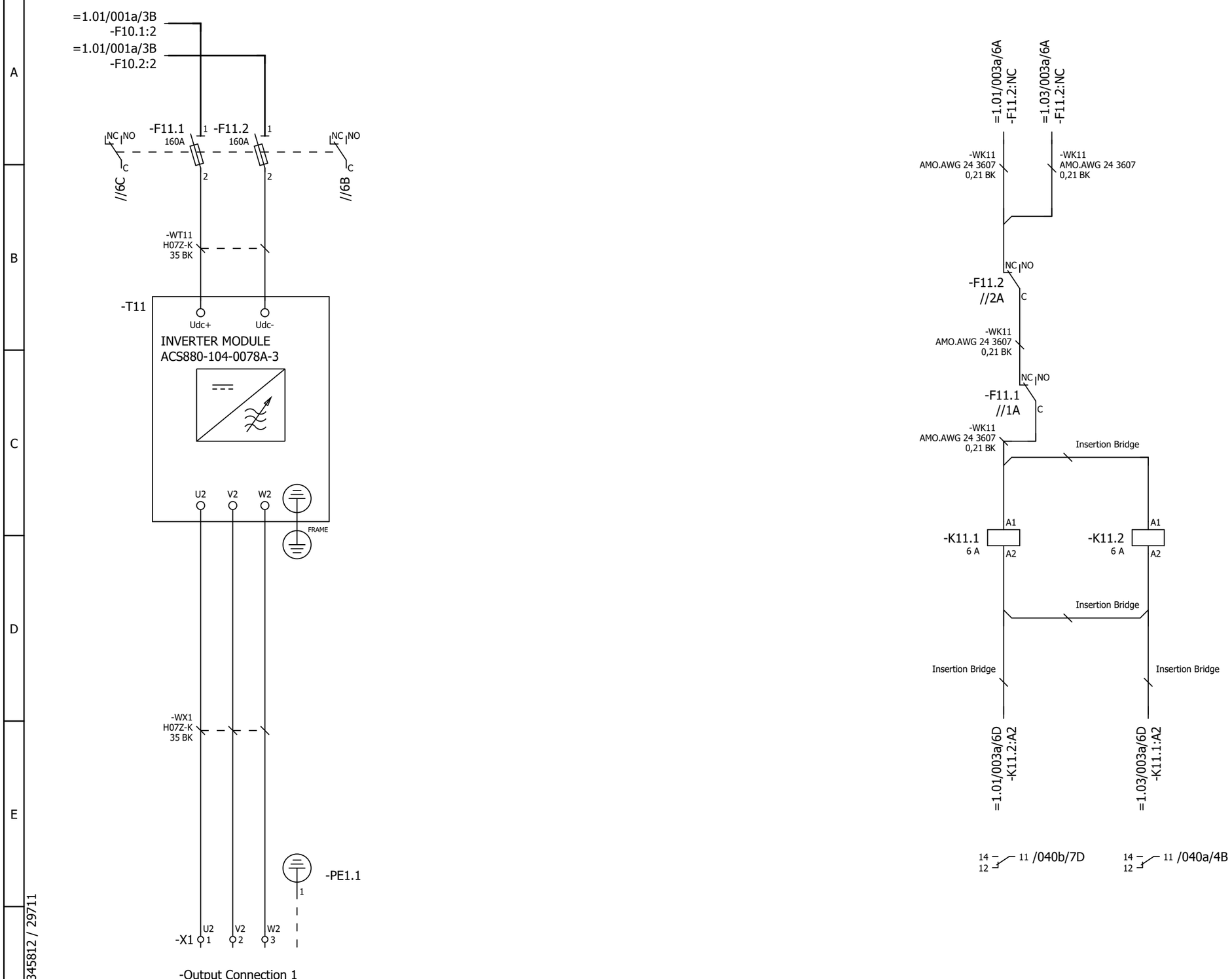

P345812 / 29711

Cust. Doc. No.	Prep. Sky-Xin Zhang 02.08.2023	Title MAIN CIRCUIT	Circuit diagram EFS2
Cust. Ref. No.	App.	INV1.02	SAP Doc. No.
Customer WMMP	Project Zhaka Jack-up Lift System	ACS880-107-0078A-3	EPLAN Doc. No. 3ABDC230674 - 1.02
	Zhaka Jack-up Lift System-1	400V	ABB Ref. No.
			Resp. Dept.

Item Des.
= 1.02
+ 1.01.1

Rev. .1 Sheet 003a
Cont. 013a

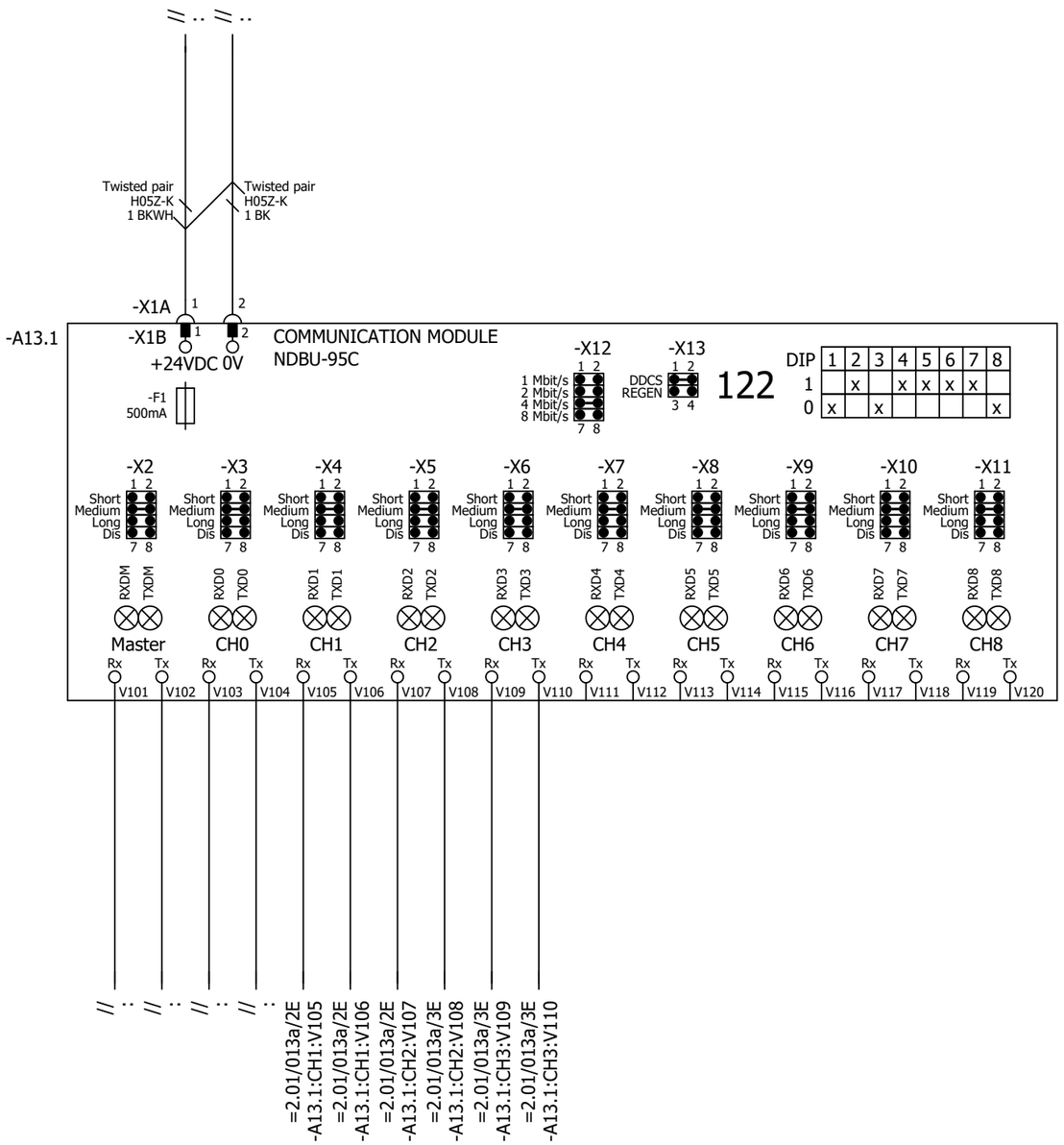

P345812 / 29711

Cust. Doc. No.	Prep. Sky-Xin Zhang 02.08.2023	Title DDCS BRANCHING UNIT	Circuit diagram EFS2
Cust. Ref. No.	App.	INV1.02	SAP Doc. No.
Customer WMMP	Project Zhaka Jack-up Lift System	ACS880-107-0078A-3	EPLAN Doc. No. 3ABDC230674 - 1.02
	Zhaka Jack-up Lift System-1	400V	ABB Ref. No.
			Resp. Dept.

Item Des. = 1.02 + 1.01.1

Rev. .1 Sheet 013a

Cont. 040a

Control and status signals	Terminal	Pin
E-STOP FEEDBACK 1 - ESTOP ACTIVE	-XRO1	12
RUNNING 1 - RUNNING	-XRO2	22
FAULT (-1) 1 - NO FAULT	-XRO3	32

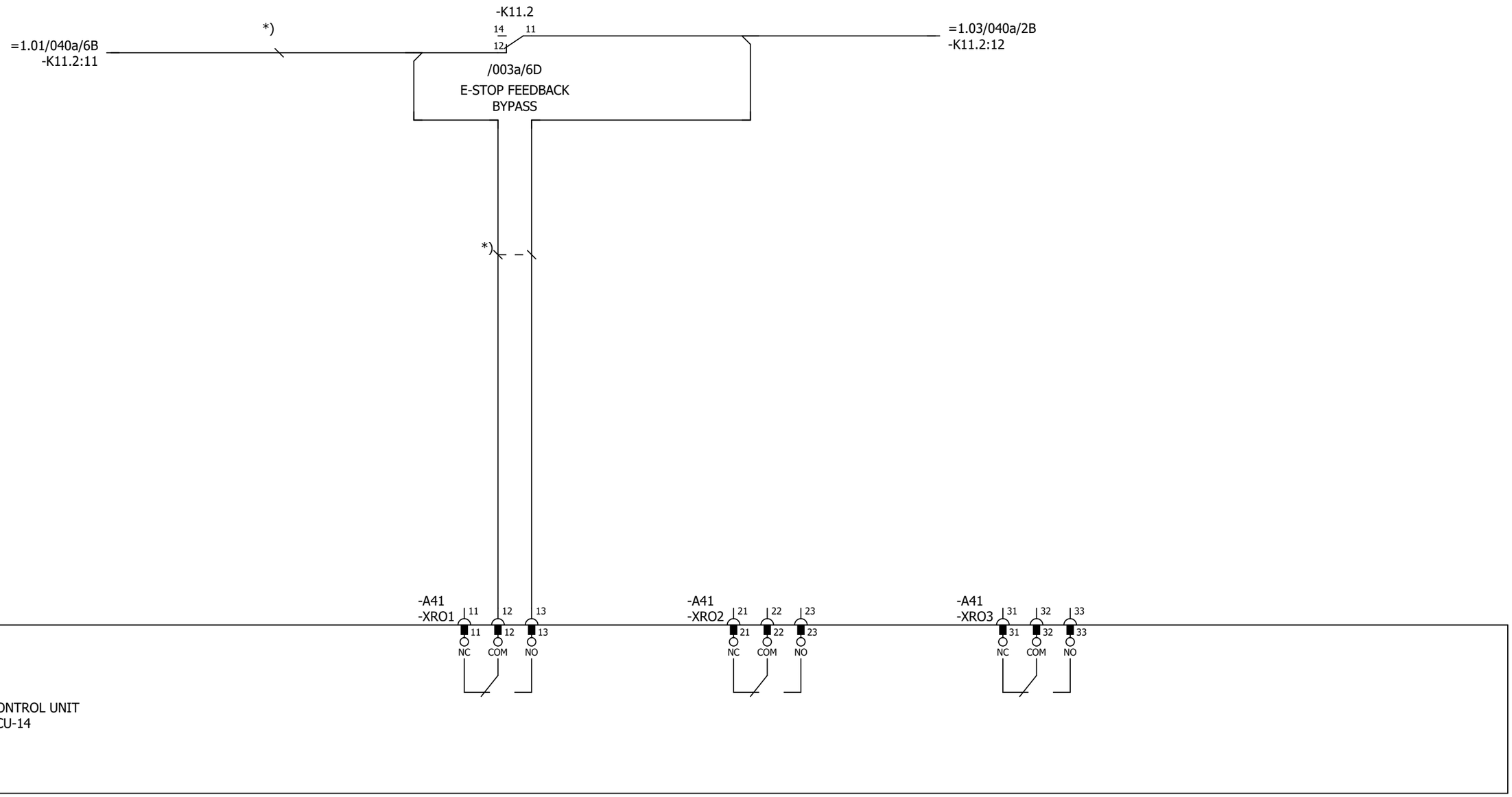

Cust. Doc. No.	Prep. Sky-Xin Zhang 02.08.2023	Title CONTROL BOARD INV1.02 ACS880-107-0078A-3 400V	Circuit diagram EFS2	Item Des.	
Cust. Ref. No.	App.		SAP Doc. No.	= 1.02 + 1.01.1	
Customer WMMP	Project Zhaka Jack-up Lift System Zhaka Jack-up Lift System-1	ABB	EPLAN Doc. No. 3ABDC230674 - 1.02		
			ABB Ref. No.	Rev. .1	Sheet 040a
			Resp. Dept.	Cont.	040b

Control and status signals	Terminal	Pin
DIGITAL INTERLOCK	-XD24	1
START/STOP 1 - START	-XDI	1
FORWARD/REVERSE 1 - REVERSE	-XDI	2
RESET	-XDI	3
EMERGENCY STOP 0 - ACTIVE	-XDI	4
NOT SPECIFIED	-XDI	5
DI6 NOT IN USE	-XDI	6
OUTPUT: READY	-XDIO	1
OUTPUT: RUNNING	-XDIO	2

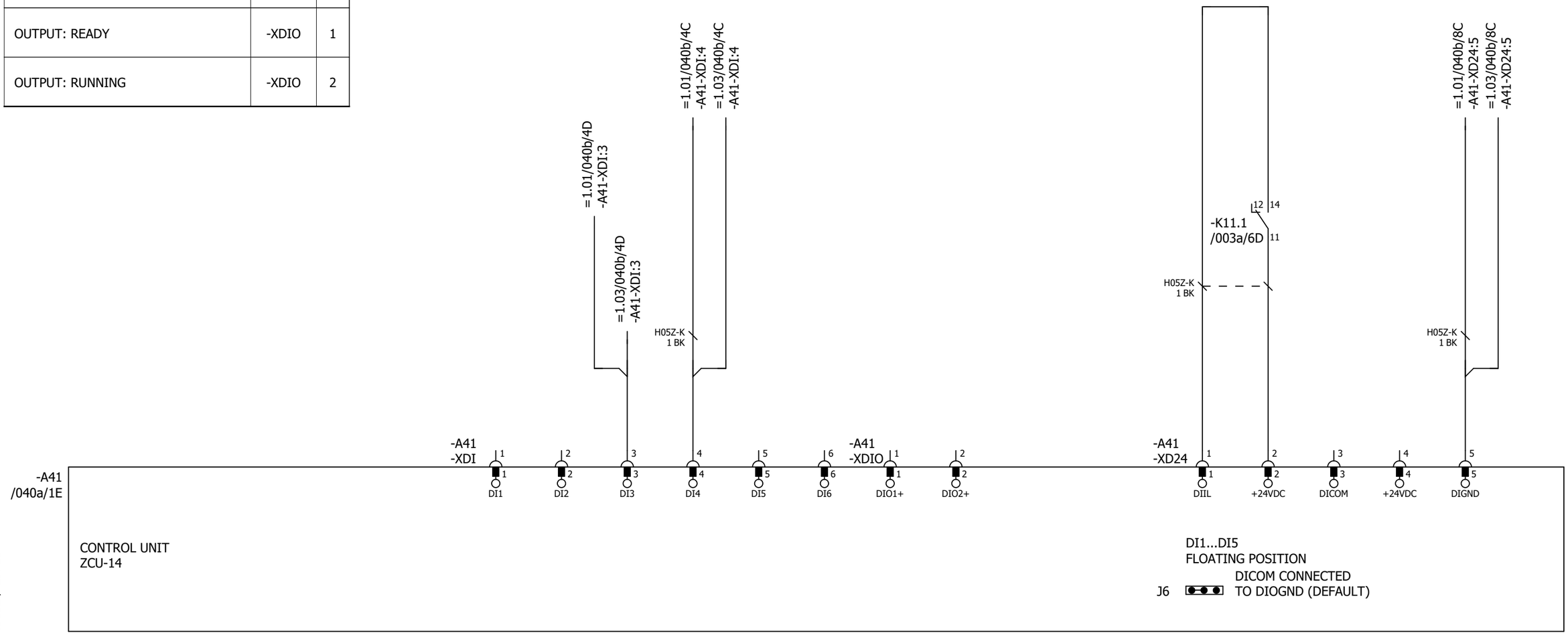

P345812 / 29711

Cust. Doc. No.	Prep. Sky-Xin Zhang 02.08.2023	Title CONTROL BOARD INV1.02 ACS880-107-0078A-3 400V	Circuit diagram EFS2
Cust. Ref. No.	App.		SAP Doc. No.
Customer WMMP	Project Zhaka Jack-up Lift System Zhaka Jack-up Lift System-1		EPLAN Doc. No. 3ABDC230674 - 1.02
			ABB Ref. No.
			Resp. Dept.

Item Des.
= 1.02
+ 1.01.1

Rev. .1 Sheet 040b
Cont. 040c

Control and status signals	Terminal	Pin
MOTOR TEMP. MONITORING 0(2)…10V	-XAI	4
AI2 NOT SPECIFIED BY DEFAULT NOT IN USE 0(4)…20mA	-XAI	6
CURR SOU MOT TEMP MONIT 0(4)...20mA	-XAO	1
CURRENT 0(4)…20mA ↔ 0(4)…MOTOR CURRENT	-XAO	3

P345812 / 29711

Cust. Doc. No.	Prep. Sky-Xin Zhang 02.08.2023	Title CONTROL BOARD INV1.02 ACS880-107-0078A-3 400V	Circuit diagram EFS2
Cust. Ref. No.	App.		SAP Doc. No.
Customer WMMP	Project Zhaka Jack-up Lift System Zhaka Jack-up Lift System-1		EPLAN Doc. No. 3ABDC230674 - 1.02
			ABB Ref. No.
			Resp. Dept.

Item Des.
= 1.02
+ 1.01.1

Rev. .1 Sheet 040c
Cont. 040d

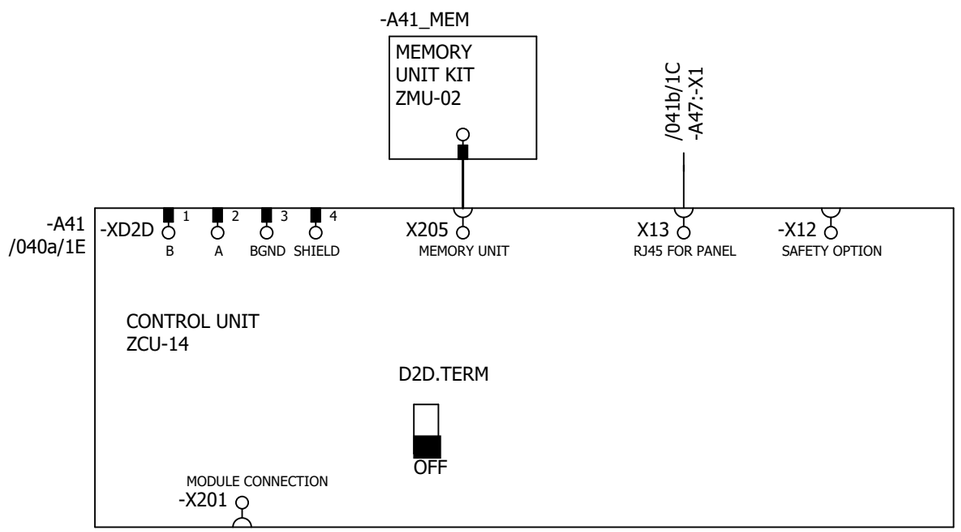

P345812 / 29711

Cust. Doc. No.	Prep. Sky-Xin Zhang 02.08.2023	Title CONTROL BOARD INV1.02 ACS880-107-0078A-3 400V	Circuit diagram EFS2
Cust. Ref. No.	App.		SAP Doc. No.
Customer WMMP	Project Zhaka Jack-up Lift System Zhaka Jack-up Lift System-1		EPLAN Doc. No. 3ABDC230674 - 1.02
			ABB Ref. No.
			Resp. Dept.

Item Des.
= 1.02
+ 1.01.1

Rev. .1 Sheet 040d
Cont. 041a

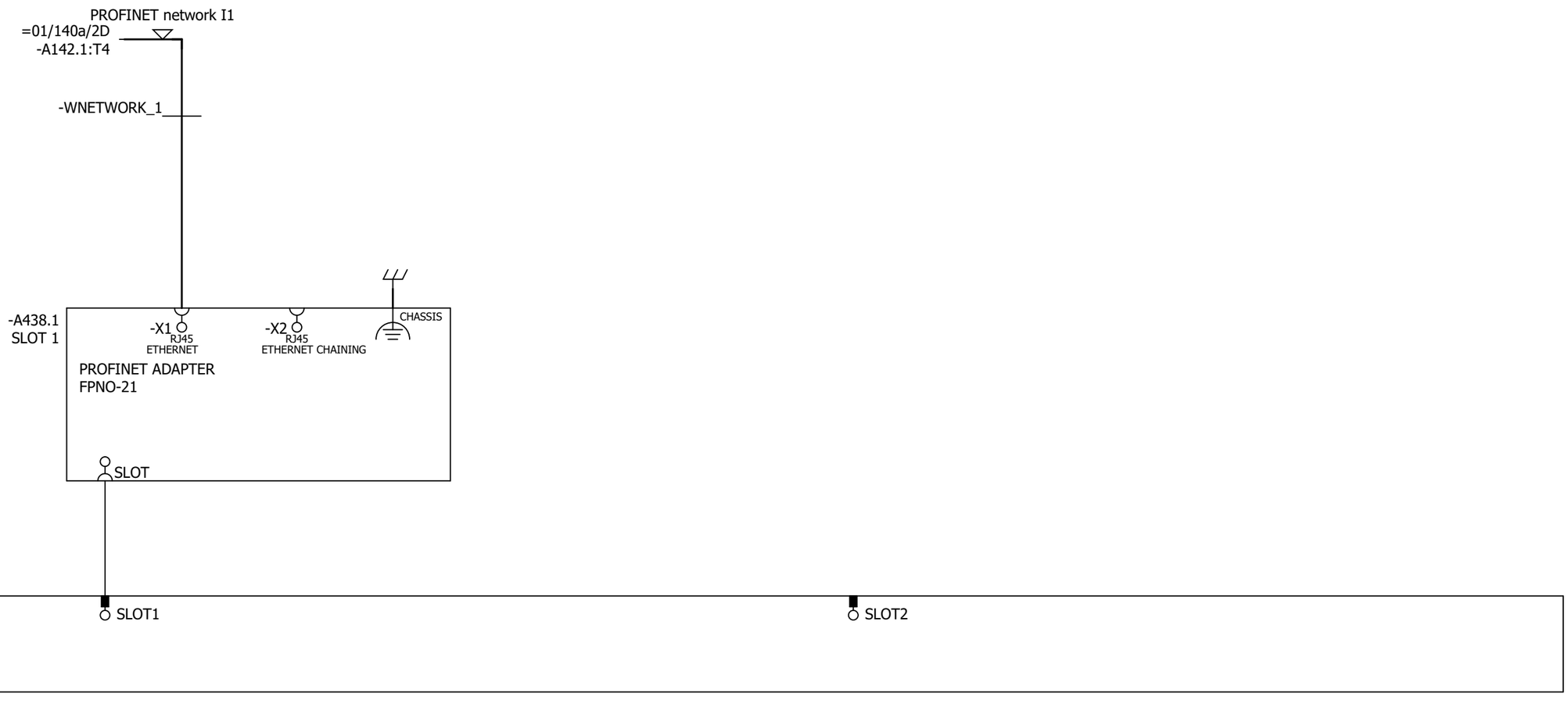

Cust. Doc. No.	Prep. Sky-Xin Zhang 02.08.2023	Title OPTION CARDS INV1.02 ACS880-107-0078A-3 400V	Circuit diagram EFS2
Cust. Ref. No.	App.		SAP Doc. No.
Customer WMMP	Project Zhaka Jack-up Lift System Zhaka Jack-up Lift System-1		EPLAN Doc. No. 3ABDC230674 - 1.02
			ABB Ref. No.
			Resp. Dept.

Item Des.
= 1.02
+ 1.01.1

Rev. .1 Sheet 041a
Cont. 041b

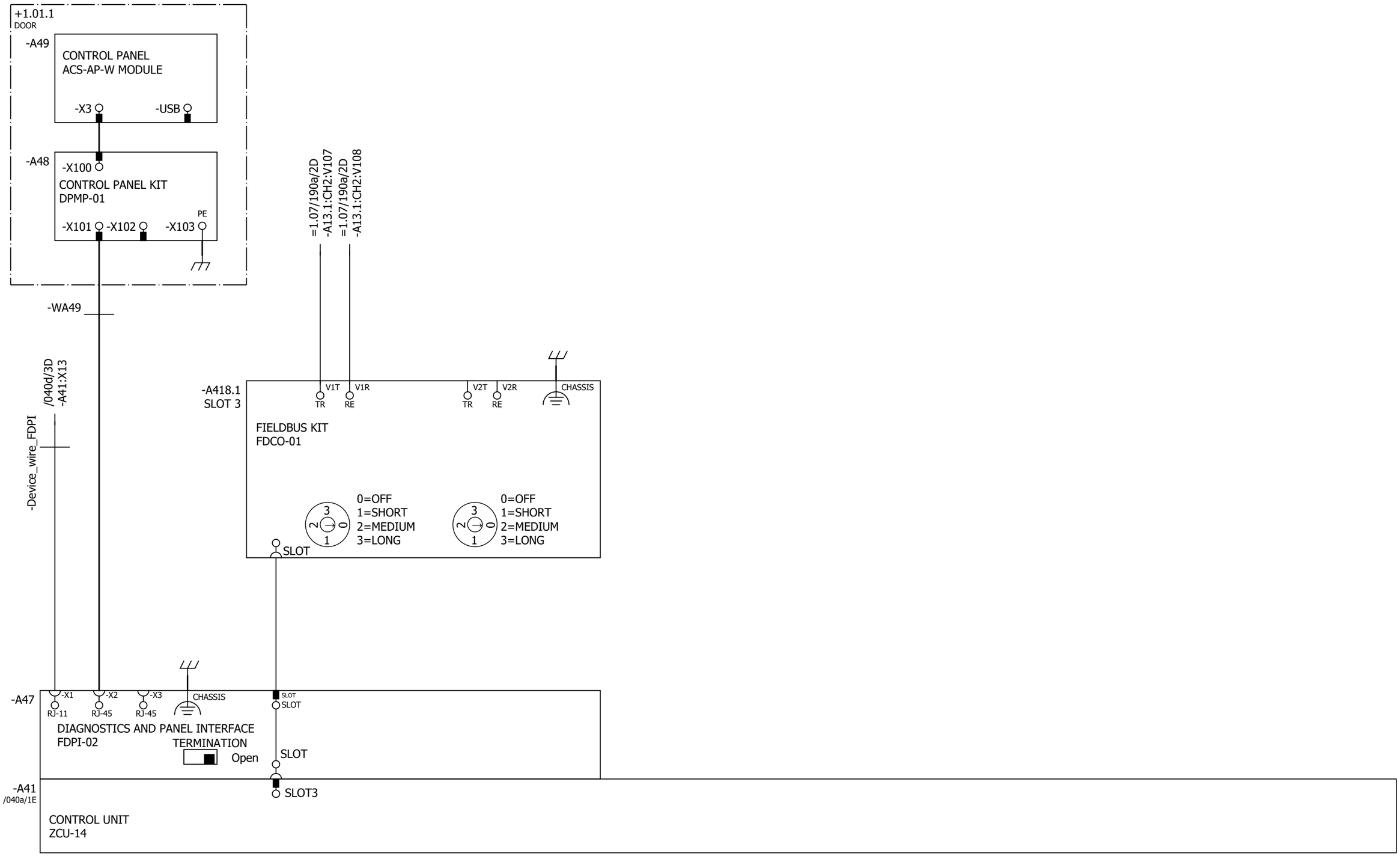

Cust. Doc. No.	Prep. Sky-Xin Zhang 02.08.2023	Title OPTION CARDS INV1.02 ACS880-107-0078A-3 400V	Circuit diagram EFS2
Cust. Ref. No.	App.		SAP Doc. No.
Customer WMMP	Project Zhaka Jack-up Lift System Zhaka Jack-up Lift System-1		EPLAN Doc. No. 3ABDC230674 - 1.02
			ABB Ref. No.
			Resp. Dept.

Item Des.
= 1.02
+ 1.01.1

Rev. .1 Sheet 041b
Cont. 061a

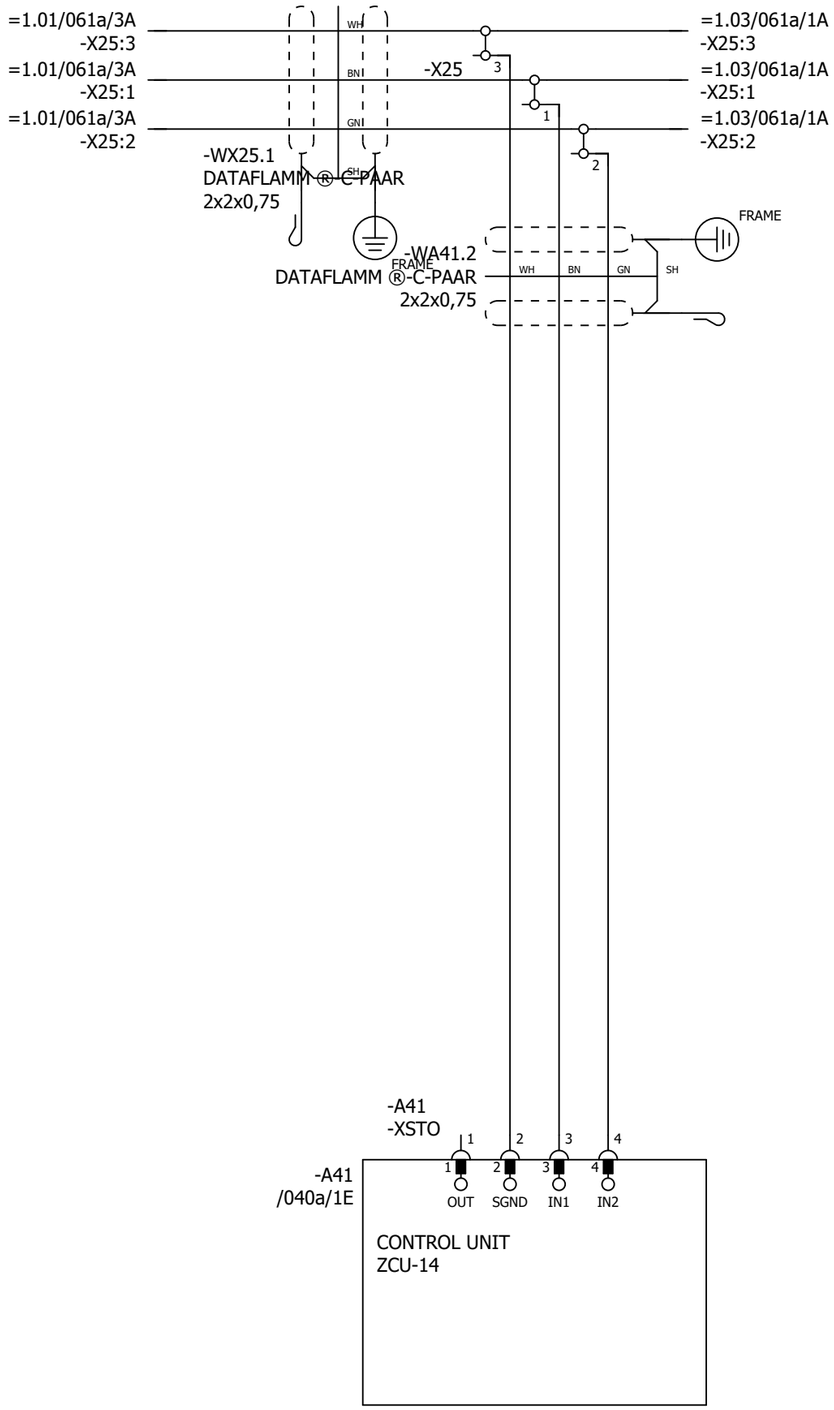

P345812 / 29711

SAFETY CIRCUIT
MACRO REVISION 6
RULES CONVERTED 19.7.2023

Cust. Doc. No.	Prep. Sky-Xin Zhang 02.08.2023	Title SAFETY CIRCUIT INV1.02 ACS880-107-0078A-3 400V	Circuit diagram EFS2
Cust. Ref. No.	App.		SAP Doc. No.
Customer WMMP	Project Zhaka Jack-up Lift System Zhaka Jack-up Lift System-1		EPLAN Doc. No. 3ABDC230674 - 1.02
			ABB Ref. No.
			Resp. Dept.

Item Des.
= 1.02
+ 1.01.1

Rev. .1 Sheet 061a

Cont. &MPC/Part list_1

Part list: 3ABDC230674DU01002

Item	Sort String	Qty.Str	Unit	Component Number	Description and text	Technical data
0010		1.000	ST		ACS880-107-0078A-3+A012+B053+C121+C132+	
0020		1.000	ST		_C206+E210+F272+F287+F288+G300+G307+G315	
0030		1.000	ST		_+G320+G330+G344+H352+H367+J400+K492+L50	
0040		1.000	ST		_3+P913+Q964	
0050		1.000	ST		=1.02	
0060		1.000	ST		+1.01.1,INU3	
0070		1.000	ST		Powerconversionequipment	
0080	-A41_MEM	1.000	PC	3AXD50000006010	MEMORY UNIT KIT ZMU-02	
0090	-T11	1.000	PC	3AUA0000120009-M	ACS880-104-0078A-3+P922	+P922
0100	SCREW	1.000	PC	3AFE68681481	SCREW K30X10 TORX	PT WN1452 ZN
0110	SOFTWARE	1.000	PC	3AUA0000153462	SOFTWARE PRIMARY CONTROL PROGRA	AINF6 FOR ZCU-12/14
0120		1.000	ST		R4imoduleDCfuse	
0130	-F11.1-2	2.000	PC	3AXD50000000219	FUSE FR27UQ69V160T/160A	6.921 CP URQ 27X60MM FERRULE;AR
0140		1.000	ST		R3i-R4imoduleDCfusebase	
0150	(-F11.1-2)	2.000	PC	3AUA0000089227	FUSE HOLDER FUSE BASE US271MI 150A	FUSE BASE US271MI 150A 800V
0160		1.000	ST		motorterminalR4i,coppercable	
0170	-X1	1.000	PC	3ABD50000000270	CONNECTOR PPAC-50	50 MM2;150 A;800V
0180	-X1	1.000	PC	3ABD50000000270	CONNECTOR PPAC-50	50 MM2;150 A;800V
0190	-X1	1.000	PC	3ABD50000000270	CONNECTOR PPAC-50	50 MM2;150 A;800V
0200		1.000	ST		24VDCsupplyZCU	
0210	-WA41_1	1.000	PC	3AXD50000005218	WIRE HARNESS 24VDC SUPPLY X51 ZCU V	HALOGEN FREE;X51_A51
0220		1.000	ST		Rooffancontrol	
0230	-WA41_3	1.000	PC	3AXD50000002688	WIRE HARNESS FAN CONTROL MAIN WIRE	HALOGEN FREE;X208_X26.3
0240		1.000	ST		Toprowmodulewireharness	
0250	-WT11	1.000	PC	3AXD50000002256	WIRE HARNESS R4I FUSE_MODULE V2	HALOGEN FREE;MAIN CIRCUIT WIRE SET
0260	-WX1	1.000	PC	3AXD50000002258	WIRE HARNESS R4I MODULE_OUTPUT TR V	HALOGEN FREE;MAIN CIRCUIT WIRE SET
0270		1.000	ST		Optionmodule	
0280	-A418.1	1.000	PC	3AUA0000107392	COMMUNIC. ADAPTER FDCO-01	
0290		1.000	ST		Controlpanel	
0300	-A47	1.000	PC	3AUA0000108650	FIELDBUS KIT FDPI-02	PANEL BUS ADAPTER
0310	-A48	1.000	PC	3AUA0000108878	CONTROL PANEL KIT DPMP-01	DPMP-01
0320	-A49	1.000	PC	3AXD50000025964	CONTROL PANEL ACS-AP-W MODULE	ASSISTANT PANEL WIRELESS CPU1
0330		1.000	ST		DCfusesupervision	

P345812 / 29711

Cust. Doc. No.	Prep.	Title PART LIST INV1.02 ACS880-107-0078A-3 400V	Item Des. = 1.02 +
Cust. Ref. No.	App.		SAP Doc. No.
Customer WMMP	Project Zhaka Jack-up Lift System Zhaka Jack-up Lift System-1		EPLAN Doc. No. 3ABDC230674 - 1.02
			ABB Ref. No. / Rev. / Sheet Part list_1
			Resp. Dept. / Cont. Part list_2

Part list: 3ABDC230674DU01002

Item	Sort String	Qty.Str	Unit	Component Number	Description and text	Technical data
0340	-K11.1-2	2.000	PC	3AXD50000021313	RELAY DEK_REL_G24/21	250 V;6 A;COIL 24VDC
0350		1.000	ST		FieldBus	
0360	-A438.1	1.000	PC	3AXD50000192779	OPTION MODULE FPNO-21	PROFINET IO
0370		1.000	ST		Supplementtorelay	
0380	(-K11.1)	1.000	PC	3AXD50000021312	TERMINAL BLOCK ST EB2_DIK_RD 2716693	2POLE, 6,15 MM PITCH;FOR DEK RELAYS

P345812 / 29711

Cust. Doc. No.	Prep.	Title PART LIST INV1.02 ACS880-107-0078A-3 400V	Item Des. = 1.02 +
Cust. Ref. No.	App.		SAP Doc. No.
Customer WMMP	Project Zhaka Jack-up Lift System Zhaka Jack-up Lift System-1		EPLAN Doc. No. 3ABDC230674 - 1.02
			ABB Ref. No. / Rev. / Sheet Part list_2
			Resp. Dept. / Cont. &EMA/1

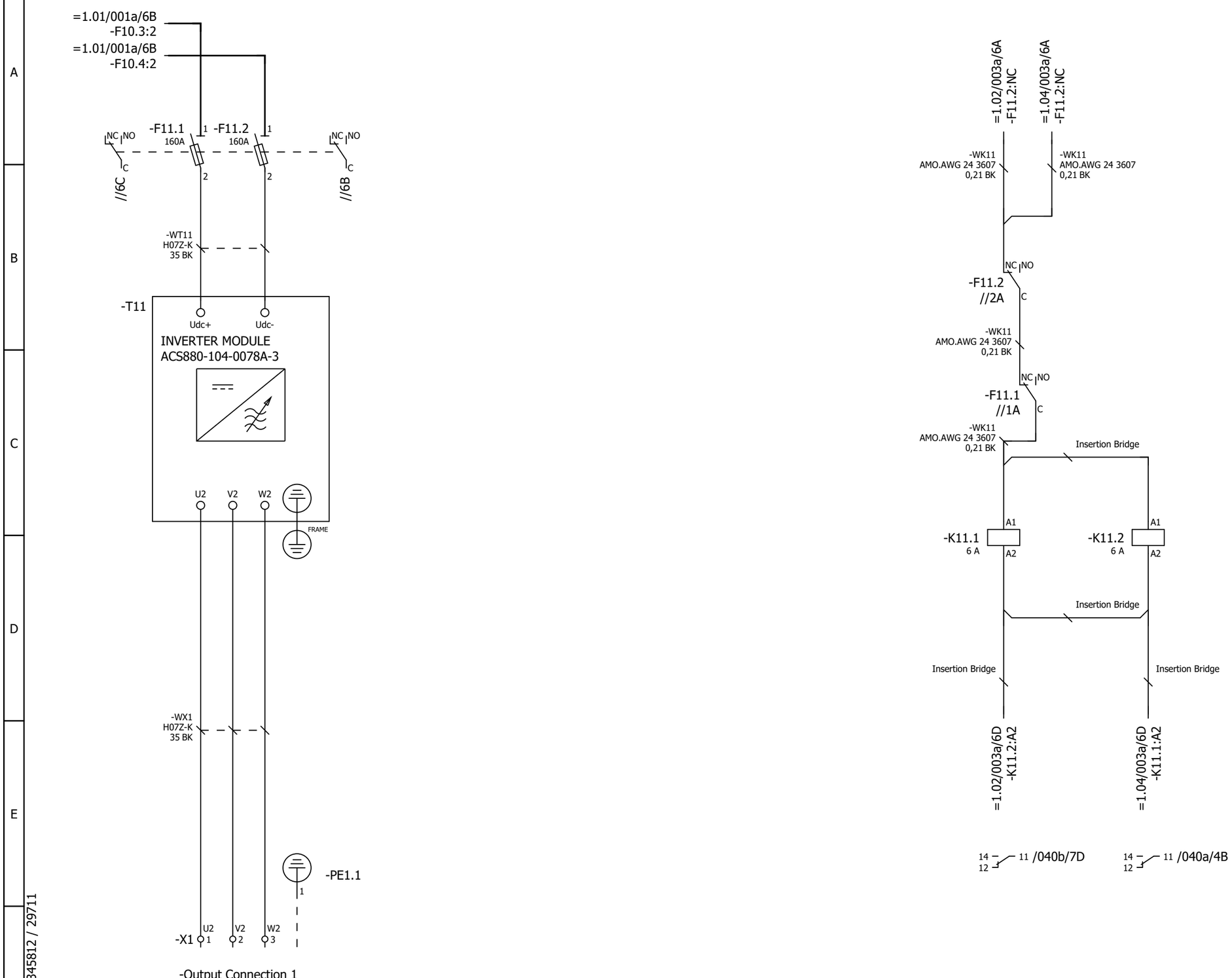

P345812 / 29711

Cust. Doc. No.	Prep. Sky-Xin Zhang 02.08.2023	Title MAIN CIRCUIT	Circuit diagram EFS2
Cust. Ref. No.	App.	INV1.03	SAP Doc. No.
Customer WMMP	Project Zhaka Jack-up Lift System	ACS880-107-0078A-3	EPLAN Doc. No. 3ABDC230674 - 1.03
	Zhaka Jack-up Lift System-1	400V	ABB Ref. No.
			Resp. Dept.

Item Des.
= 1.03
+ 1.01.1

Rev. .1 Sheet 003a
Cont. 040a

Control and status signals	Terminal	Pin
E-STOP FEEDBACK 1 - ESTOP ACTIVE	-XRO1	12
RUNNING 1 - RUNNING	-XRO2	22
FAULT (-1) 1 - NO FAULT	-XRO3	32

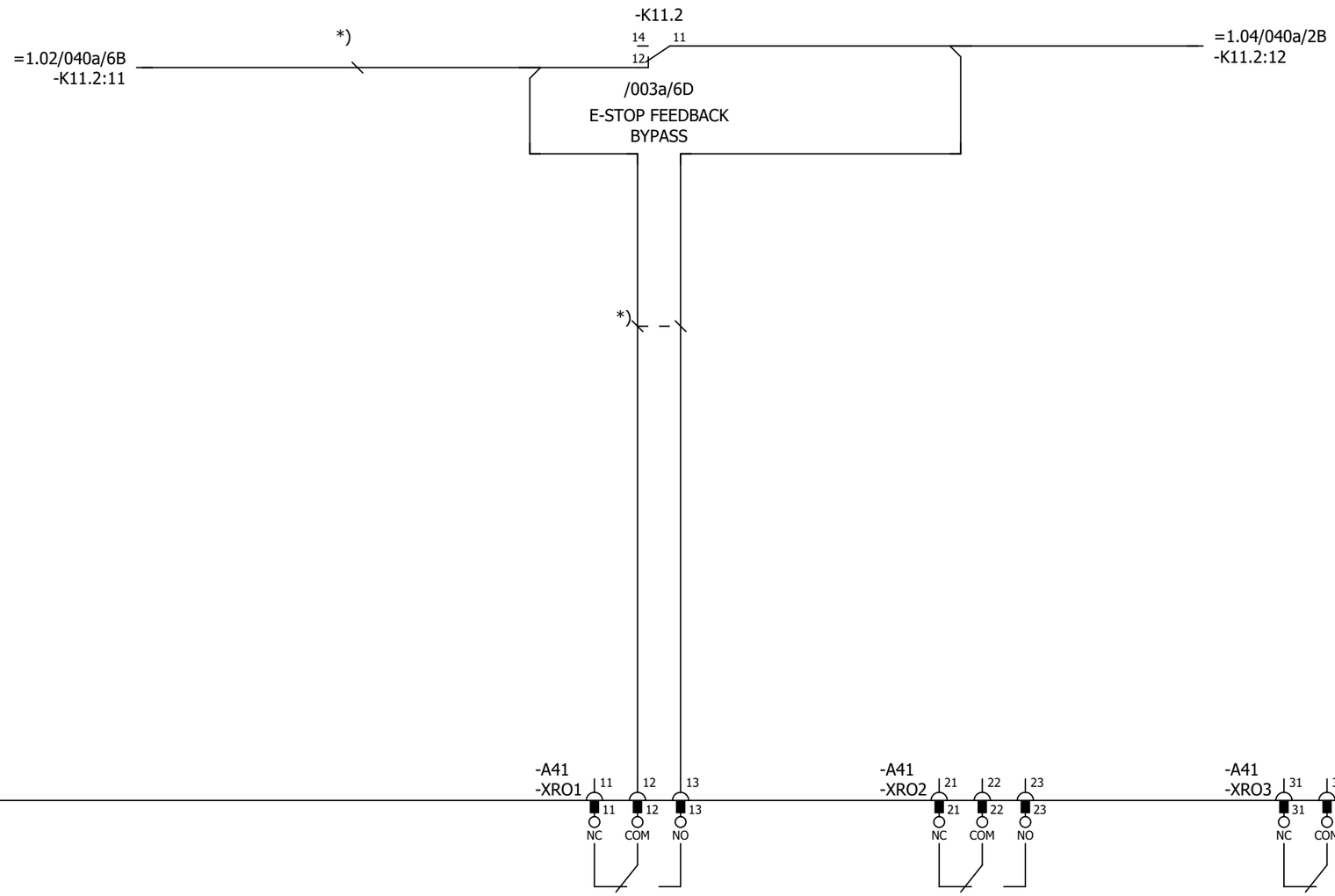

P345812 / 29711

Cust. Doc. No.	Prep. Sky-Xin Zhang 02.08.2023	Title CONTROL BOARD INV1.03 ACS880-107-0078A-3 400V	Circuit diagram EFS2
Cust. Ref. No.	App.		SAP Doc. No.
Customer WMMP	Project Zhaka Jack-up Lift System Zhaka Jack-up Lift System-1		EPLAN Doc. No. 3ABDC230674 - 1.03
			ABB Ref. No.
			Resp. Dept.

Item Des.
= 1.03
+ 1.01.1

Rev. .1 Sheet 040a
Cont. 040b

Control and status signals	Terminal	Pin
DIGITAL INTERLOCK	-XD24	1
START/STOP 1 - START	-XDI	1
FORWARD/REVERSE 1 - REVERSE	-XDI	2
RESET	-XDI	3
EMERGENCY STOP 0 - ACTIVE	-XDI	4
NOT SPECIFIED	-XDI	5
DI6 NOT IN USE	-XDI	6
OUTPUT: READY	-XDIO	1
OUTPUT: RUNNING	-XDIO	2

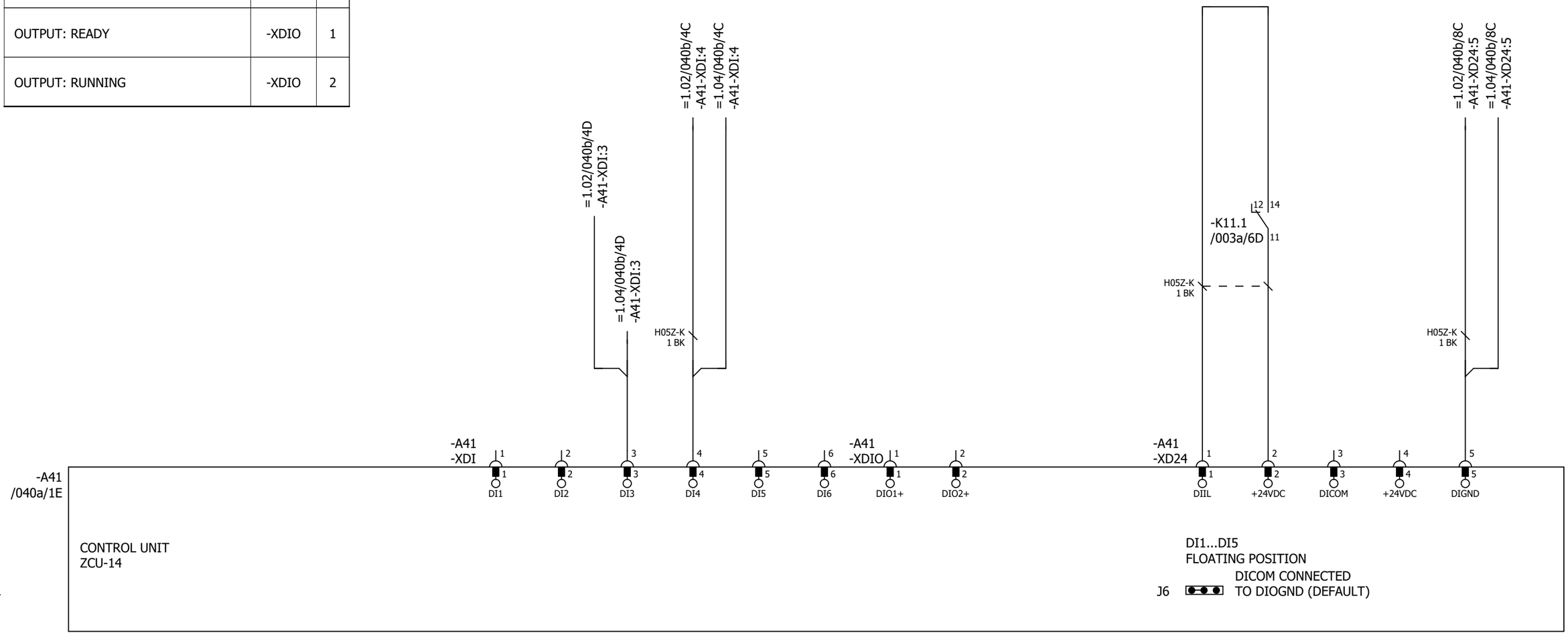

Cust. Doc. No.	Prep. Sky-Xin Zhang 02.08.2023	Title CONTROL BOARD	Circuit diagram EFS2	Item Des.	
Cust. Ref. No.	App.	INV1.03	SAP Doc. No.	= 1.03	
Customer WMMP	Project Zhaka Jack-up Lift System	ACS880-107-0078A-3	EPLAN Doc. No. 3ABDC230674 - 1.03	+ 1.01.1	
	Zhaka Jack-up Lift System-1	400V	ABB Ref. No.	Rev. .1	Sheet 040b
			Resp. Dept.	Cont.	040c

Control and status signals	Terminal	Pin
MOTOR TEMP. MONITORING 0(2)…10V	-XAI	4
AI2 NOT SPECIFIED BY DEFAULT NOT IN USE 0(4)…20mA	-XAI	6
CURR SOU MOT TEMP MONIT 0(4)...20mA	-XAO	1
CURRENT 0(4)…20mA ↔ 0(4)…MOTOR CURRENT	-XAO	3

P345812 / 29711

Cust. Doc. No.	Prep. Sky-Xin Zhang 02.08.2023	Title CONTROL BOARD INV1.03 ACS880-107-0078A-3 400V	Circuit diagram EFS2
Cust. Ref. No.	App.		SAP Doc. No.
Customer WMMP	Project Zhaka Jack-up Lift System Zhaka Jack-up Lift System-1		EPLAN Doc. No. 3ABDC230674 - 1.03
			ABB Ref. No.
			Resp. Dept.

Item Des.
= 1.03
+ 1.01.1

Rev. .1 Sheet 040c
Cont. 040d

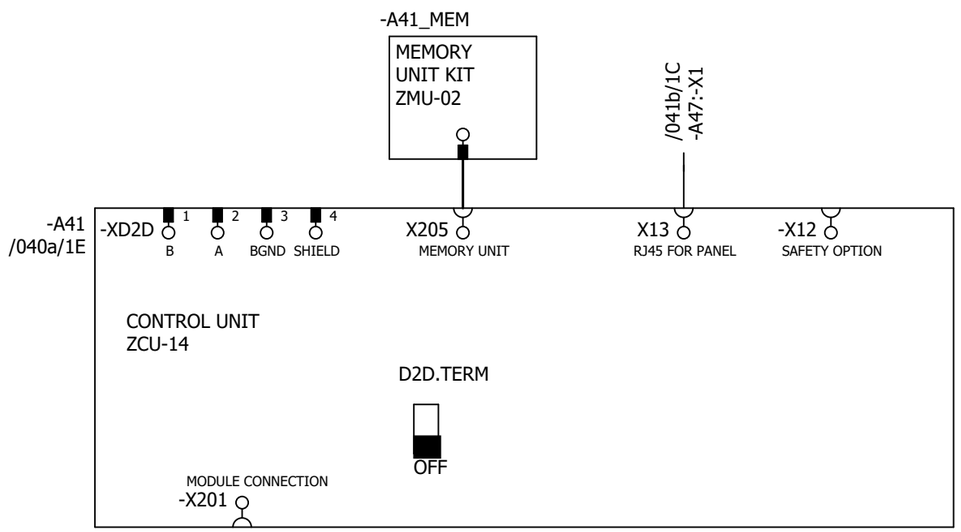

P345812 / 29711

Cust. Doc. No.	Prep. Sky-Xin Zhang 02.08.2023	Title CONTROL BOARD	Circuit diagram EFS2	Item Des.	
Cust. Ref. No.	App.	INV1.03	SAP Doc. No.	= 1.03	
Customer WMMP	Project Zhaka Jack-up Lift System	ACS880-107-0078A-3	EPLAN Doc. No. 3ABDC230674 - 1.03	+ 1.01.1	
	Zhaka Jack-up Lift System-1	400V	ABB Ref. No.	Rev. .1	Sheet 040d
			Resp. Dept.	Cont.	041a

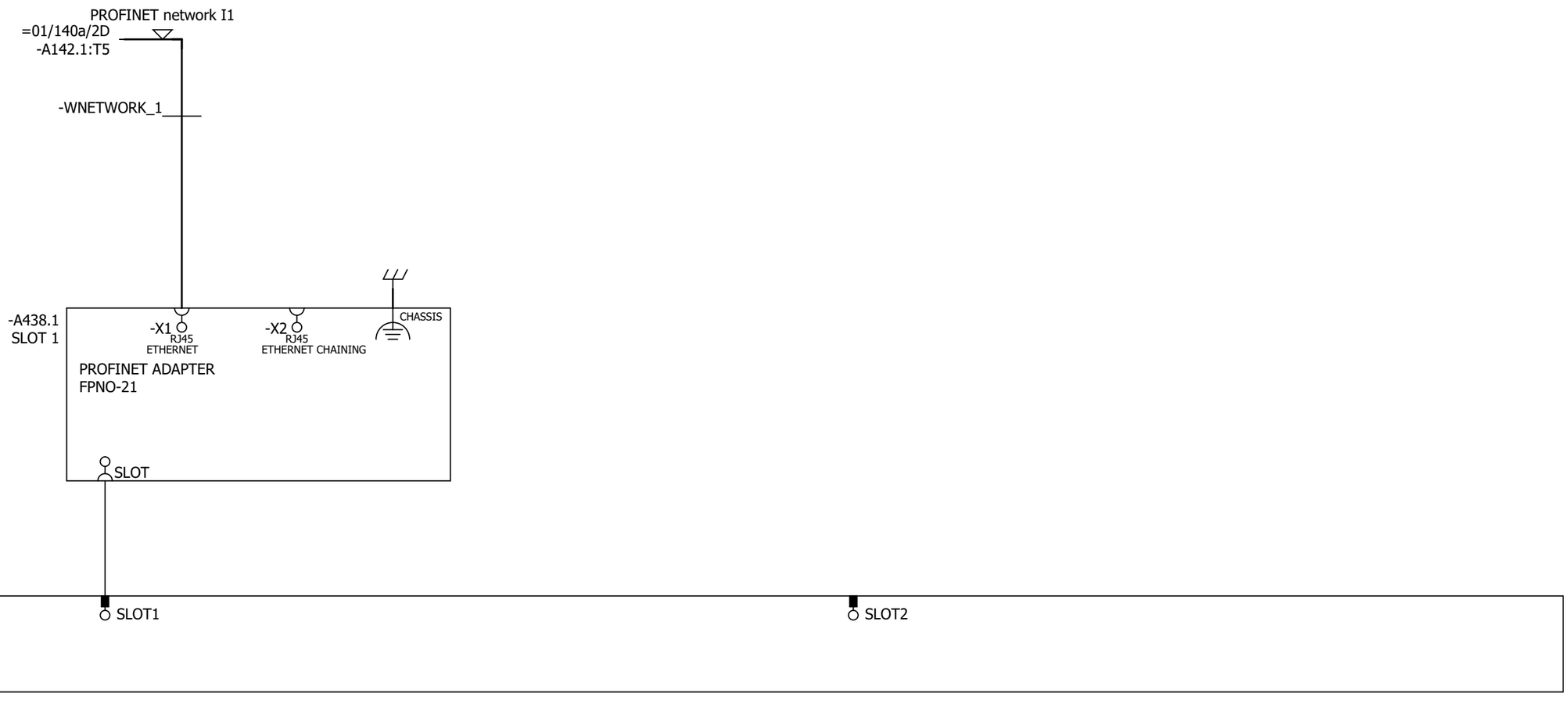

Cust. Doc. No.	Prep. Sky-Xin Zhang 02.08.2023	Title OPTION CARDS INV1.03 ACS880-107-0078A-3 400V	Circuit diagram EFS2
Cust. Ref. No.	App.		SAP Doc. No.
Customer WMMP	Project Zhaka Jack-up Lift System Zhaka Jack-up Lift System-1		EPLAN Doc. No. 3ABDC230674 - 1.03
			ABB Ref. No.
			Resp. Dept.

Item Des.
= 1.03
+ 1.01.1

Rev. .1 Sheet 041a
Cont. 041b

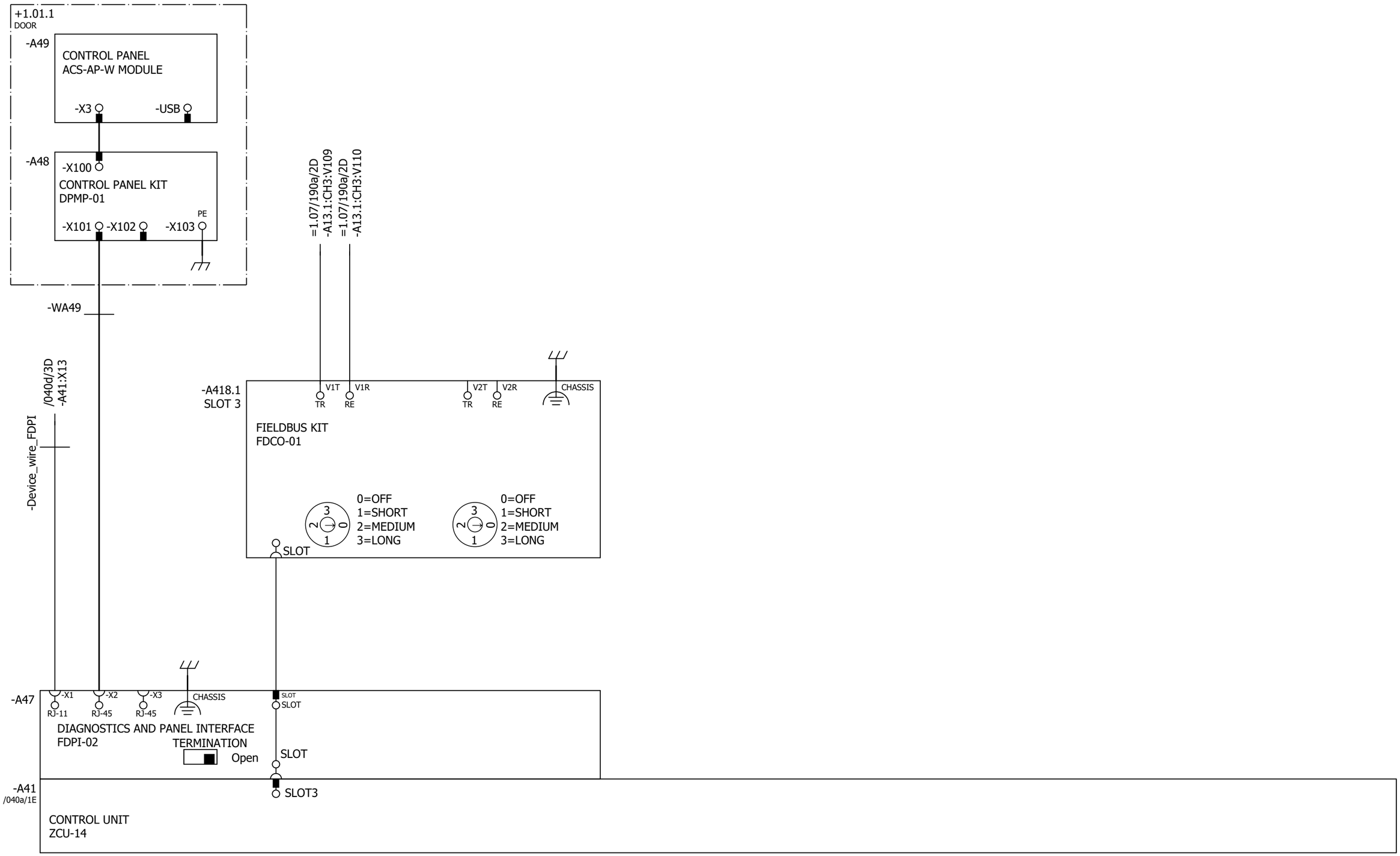

Cust. Doc. No.	Prep. Sky-Xin Zhang 02.08.2023	Title OPTION CARDS	Circuit diagram EFS2
Cust. Ref. No.	App.	INV1.03	SAP Doc. No.
Customer WMMP	Project Zhaka Jack-up Lift System	ACS880-107-0078A-3	EPLAN Doc. No. 3ABDC230674 - 1.03
	Zhaka Jack-up Lift System-1	400V	ABB Ref. No.
			Resp. Dept.

Item Des. = 1.03 + 1.01.1

Rev. .1 Sheet 041b

Cont. 061a

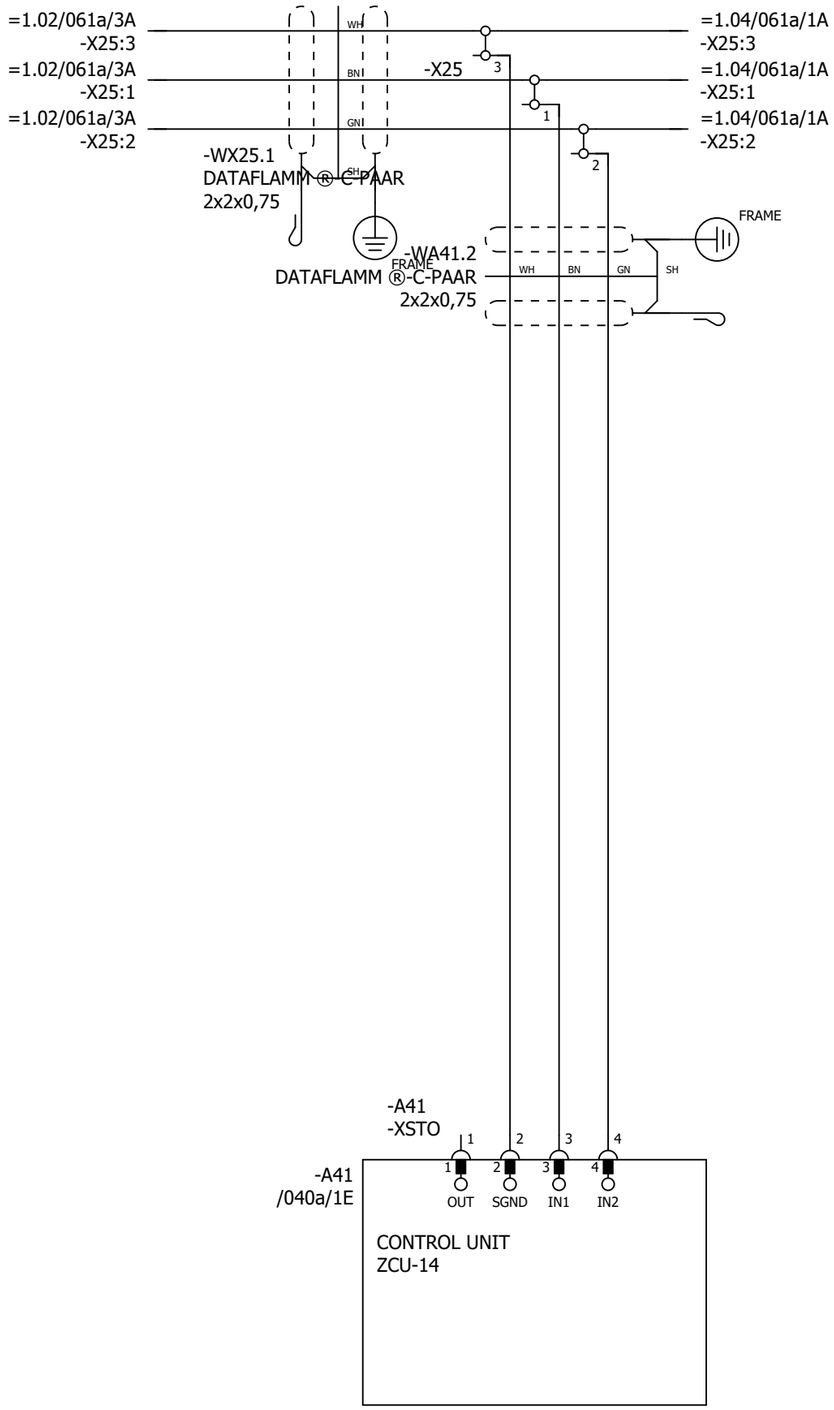

P345812 / 29711

SAFETY CIRCUIT
MACRO REVISION 6
RULES CONVERTED 19.7.2023

Cust. Doc. No.	Prep. Sky-Xin Zhang 02.08.2023	Title SAFETY CIRCUIT	Circuit diagram EFS2
Cust. Ref. No.	App.	INV1.03	SAP Doc. No.
Customer WMMP	Project Zhaka Jack-up Lift System	ACS880-107-0078A-3	EPLAN Doc. No. 3ABDC230674 - 1.03
	Zhaka Jack-up Lift System-1	400V	ABB Ref. No. / Resp. Dept.

Item Des. = 1.03 + 1.01.1

Rev. .1 Sheet 061a

Cont. &MPC/Part list_1

Part list: 3ABDC230674DU01003

Item	Sort String	Qty.Str	Unit	Component Number	Description and text	Technical data
0010		1.000	ST		ACS880-107-0078A-3+A012+B053+C121+C132+	
0020		1.000	ST		_C206+E210+F272+F287+F288+G300+G307+G315	
0030		1.000	ST		_+G320+G330+G344+H352+H367+J400+K492+L50	
0040		1.000	ST		_3+P913+Q964	
0050		1.000	ST		=1.03	
0060		1.000	ST		+1.01.1,INU3	
0070		1.000	ST		Powerconversionequipment	
0080	-A41_MEM	1.000	PC	3AXD50000006010	MEMORY UNIT KIT ZMU-02	
0090	-T11	1.000	PC	3AUA0000120009-M	ACS880-104-0078A-3+P922	+P922
0100	SCREW	1.000	PC	3AFE68681481	SCREW K30X10 TORX	PT WN1452 ZN
0110	SOFTWARE	1.000	PC	3AUA0000153462	SOFTWARE PRIMARY CONTROL PROGRA	AINF6 FOR ZCU-12/14
0120		1.000	ST		R4imoduleDCfuse	
0130	-F11.1-2	2.000	PC	3AXD50000000219	FUSE FR27UQ69V160T/160A	6.921 CP URQ 27X60MM FERRULE;AR
0140		1.000	ST		R3i-R4imoduleDCfusebase	
0150	(-F11.1-2)	2.000	PC	3AUA0000089227	FUSE HOLDER FUSE BASE US271MI 150A	FUSE BASE US271MI 150A 800V
0160		1.000	ST		motorterminalR4i,coppercable	
0170	-X1	1.000	PC	3ABD50000000270	CONNECTOR PPAC-50	50 MM2;150 A;800V
0180	-X1	1.000	PC	3ABD50000000270	CONNECTOR PPAC-50	50 MM2;150 A;800V
0190	-X1	1.000	PC	3ABD50000000270	CONNECTOR PPAC-50	50 MM2;150 A;800V
0200		1.000	ST		24VDCsupplyZCU	
0210	-WA41_1	1.000	PC	3AXD50000005218	WIRE HARNESS 24VDC SUPPLY X51 ZCU V	HALOGEN FREE;X51_A51
0220		1.000	ST		Rooffancontrol	
0230	-WA41_3	1.000	PC	3AXD50000002688	WIRE HARNESS FAN CONTROL MAIN WIRE	HALOGEN FREE;X208_X26.3
0240		1.000	ST		Toprowmodulewireharness	
0250	-WT11	1.000	PC	3AXD50000002256	WIRE HARNESS R4I FUSE_MODULE V2	HALOGEN FREE;MAIN CIRCUIT WIRE SET
0260	-WX1	1.000	PC	3AXD50000002258	WIRE HARNESS R4I MODULE_OUTPUT TR V	HALOGEN FREE;MAIN CIRCUIT WIRE SET
0270		1.000	ST		Optionmodule	
0280	-A418.1	1.000	PC	3AUA0000107392	COMMUNIC. ADAPTER FDCO-01	
0290		1.000	ST		Controlpanel	
0300	-A47	1.000	PC	3AUA0000108650	FIELDBUS KIT FDPI-02	PANEL BUS ADAPTER
0310	-A48	1.000	PC	3AUA0000108878	CONTROL PANEL KIT DPMP-01	DPMP-01
0320	-A49	1.000	PC	3AXD50000025964	CONTROL PANEL ACS-AP-W MODULE	ASSISTANT PANEL WIRELESS CPU1
0330		1.000	ST		DCfusesupervision	

P345812 / 29711

Cust. Doc. No.	Prep.	Title PART LIST INV1.03 ACS880-107-0078A-3 400V	Item Des. = 1.03 +
Cust. Ref. No.	App.		SAP Doc. No.
Customer WMMP	Project Zhaka Jack-up Lift System Zhaka Jack-up Lift System-1		EPLAN Doc. No. 3ABDC230674 - 1.03
			ABB Ref. No. / Rev. / Sheet Part list_1
			Resp. Dept. / Cont. Part list_2

Part list: 3ABDC230674DU01003

Item	Sort String	Qty.Str	Unit	Component Number	Description and text	Technical data
0340	-K11.1-2	2.000	PC	3AXD50000021313	RELAY DEK_REL_G24/21	250 V;6 A;COIL 24VDC
0350		1.000	ST		FieldBus	
0360	-A438.1	1.000	PC	3AXD50000192779	OPTION MODULE FPNO-21	PROFINET IO
0370		1.000	ST		Supplementtorelay	
0380	(-K11.1)	1.000	PC	3AXD50000021312	TERMINAL BLOCK ST EB2_DIK_RD 2716693	2POLE, 6,15 MM PITCH;FOR DEK RELAYS

P345812 / 29711

Cust. Doc. No.	Prep.	Title PART LIST INV1.03 ACS880-107-0078A-3 400V	Item Des. = 1.03 +
Cust. Ref. No.	App.		SAP Doc. No.
Customer WMMP	Project Zhaka Jack-up Lift System Zhaka Jack-up Lift System-1		EPLAN Doc. No. 3ABDC230674 - 1.03
			ABB Ref. No. / Rev. / Sheet Part list_2
			Resp. Dept. / Cont. &EMA/1

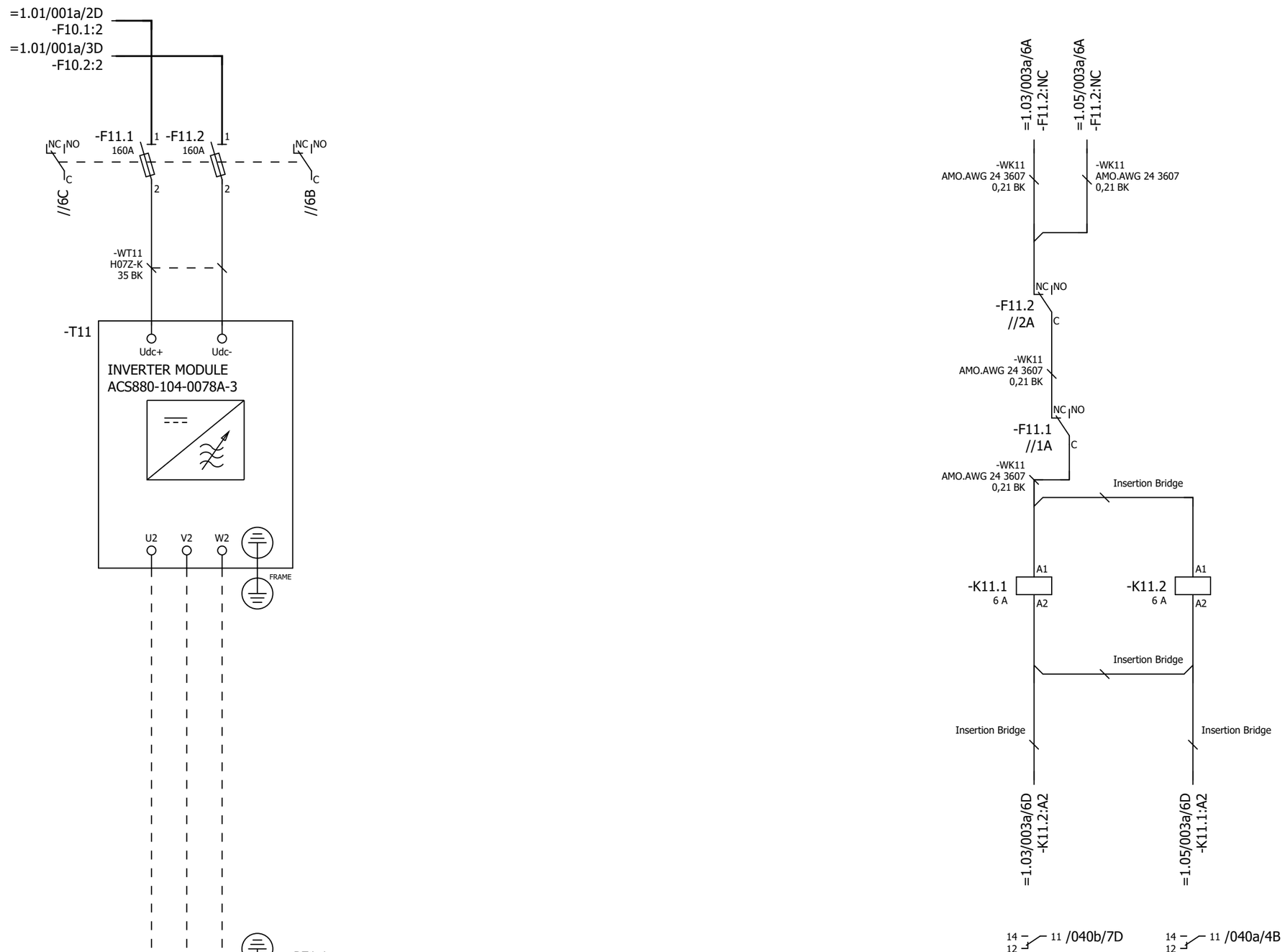

P345812 / 29711

Cust. Doc. No.	Prep. Sky-Xin Zhang 02.08.2023	Title MAIN CIRCUIT	Circuit diagram EFS2
Cust. Ref. No.	App.	INV1.04	SAP Doc. No.
Customer WMMP	Project Zhaka Jack-up Lift System	ACS880-107-0078A-3	EPLAN Doc. No. 3ABDC230674 - 1.04
	Zhaka Jack-up Lift System-1	400V	ABB Ref. No.
			Resp. Dept.

Item Des.
= 1.04
+ 1.01.1

Rev. .1 Sheet 003a
Cont. 040a

Control and status signals	Terminal	Pin
E-STOP FEEDBACK 1 - ESTOP ACTIVE	-XRO1	12
RUNNING 1 - RUNNING	-XRO2	22
FAULT (-1) 1 - NO FAULT	-XRO3	32

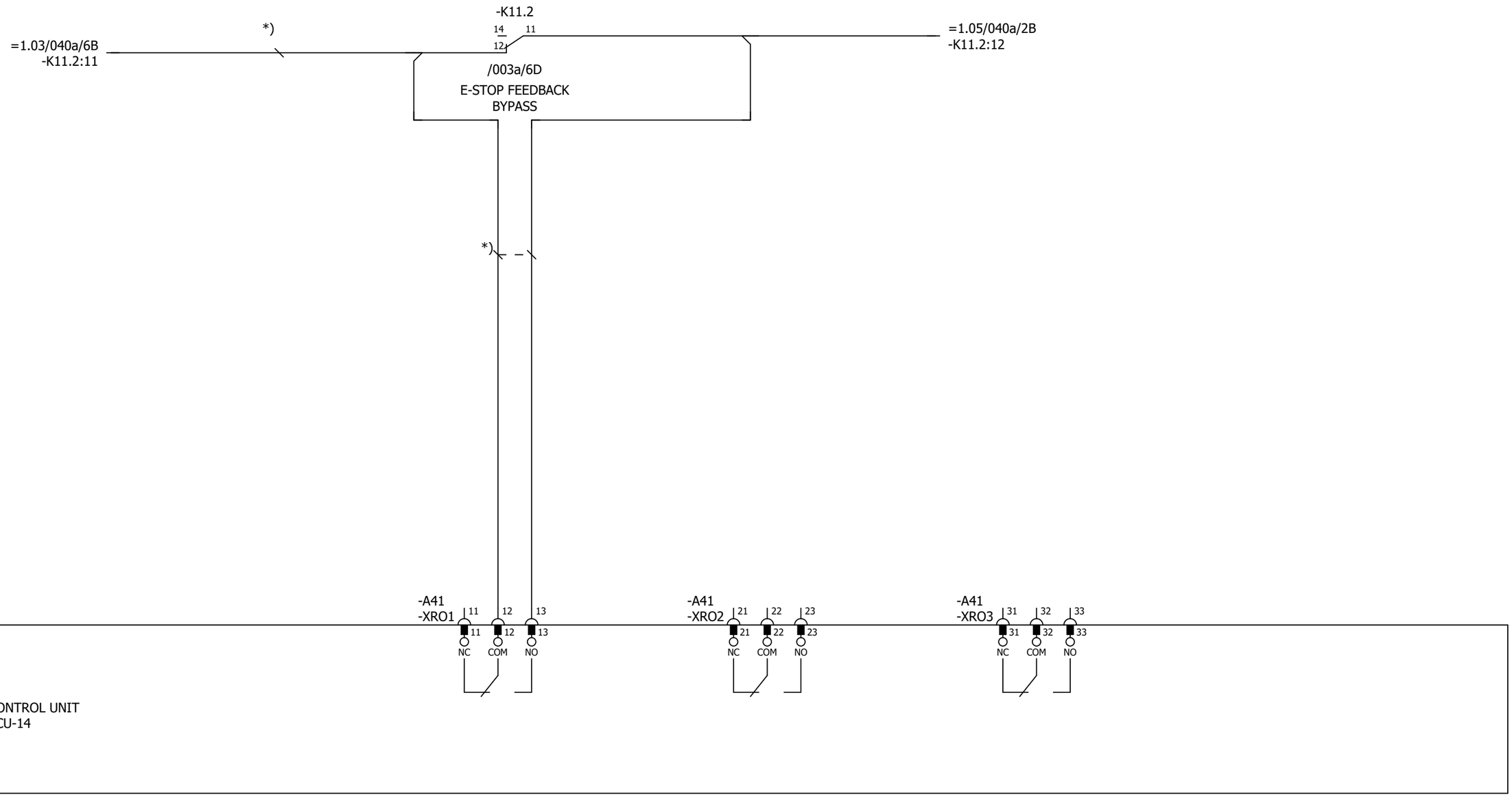

Cust. Doc. No.	Prep. Sky-Xin Zhang 02.08.2023	Title CONTROL BOARD INV1.04 ACS880-107-0078A-3 400V	Circuit diagram EFS2
Cust. Ref. No.	App.		SAP Doc. No.
Customer WMMP	Project Zhaka Jack-up Lift System Zhaka Jack-up Lift System-1		EPLAN Doc. No. 3ABDC230674 - 1.04
			ABB Ref. No.
			Resp. Dept.

Item Des.
= 1.04
+ 1.01.1

Rev. .1 Sheet 040a
Cont. 040b

Control and status signals	Terminal	Pin
DIGITAL INTERLOCK	-XD24	1
START/STOP 1 - START	-XDI	1
FORWARD/REVERSE 1 - REVERSE	-XDI	2
RESET	-XDI	3
EMERGENCY STOP 0 - ACTIVE	-XDI	4
NOT SPECIFIED	-XDI	5
DI6 NOT IN USE	-XDI	6
OUTPUT: READY	-XDIO	1
OUTPUT: RUNNING	-XDIO	2

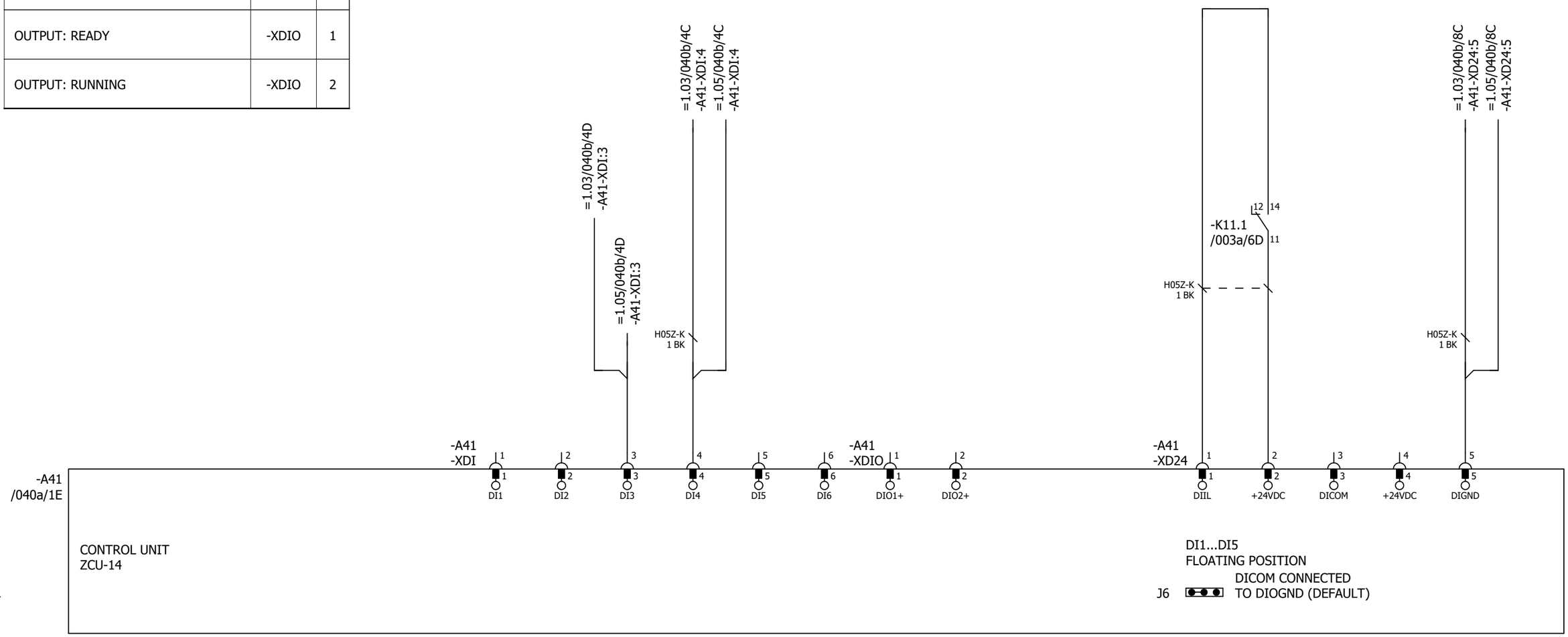

P345812 / 29711

Cust. Doc. No.	Prep. Sky-Xin Zhang 02.08.2023	Title CONTROL BOARD INV1.04 ACS880-107-0078A-3 400V	Circuit diagram EFS2
Cust. Ref. No.	App.		SAP Doc. No.
Customer WMMP	Project Zhaka Jack-up Lift System Zhaka Jack-up Lift System-1		EPLAN Doc. No. 3ABDC230674 - 1.04
			ABB Ref. No.
			Resp. Dept.

Item Des.
= 1.04
+ 1.01.1

Rev. .1 Sheet 040b
Cont. 040c

Control and status signals	Terminal	Pin
MOTOR TEMP. MONITORING 0(2)…10V	-XAI	4
AI2 NOT SPECIFIED BY DEFAULT NOT IN USE 0(4)…20mA	-XAI	6
CURR SOU MOT TEMP MONIT 0(4)...20mA	-XAO	1
CURRENT 0(4)…20mA ↔ 0(4)…MOTOR CURRENT	-XAO	3

P345812 / 29711

Cust. Doc. No.	Prep. Sky-Xin Zhang 02.08.2023	Title CONTROL BOARD INV1.04 ACS880-107-0078A-3 400V	Circuit diagram EFS2
Cust. Ref. No.	App.		SAP Doc. No.
Customer WMMP	Project Zhaka Jack-up Lift System Zhaka Jack-up Lift System-1		EPLAN Doc. No. 3ABDC230674 - 1.04
			ABB Ref. No.
			Resp. Dept.

Item Des.
= 1.04
+ 1.01.1

Rev. .1 Sheet 040c
Cont. 040d

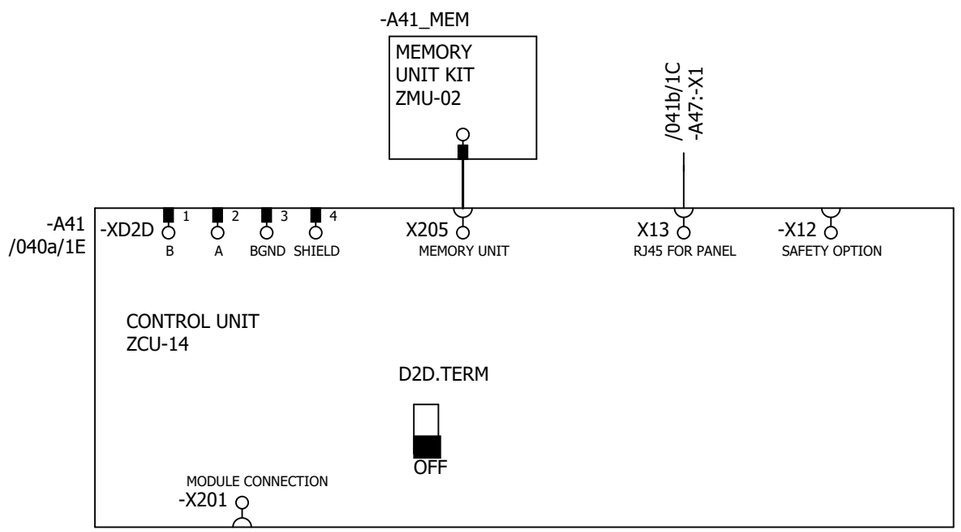

P345812 / 29711

Cust. Doc. No.	Prep. Sky-Xin Zhang 02.08.2023	Title CONTROL BOARD INV1.04 ACS880-107-0078A-3 400V	Circuit diagram EFS2
Cust. Ref. No.	App.		SAP Doc. No.
Customer WMMP	Project Zhaka Jack-up Lift System Zhaka Jack-up Lift System-1		EPLAN Doc. No. 3ABDC230674 - 1.04
			ABB Ref. No.
			Resp. Dept.

Item Des.
= 1.04
+ 1.01.1

Rev. .1 Sheet 040d
Cont. 041a

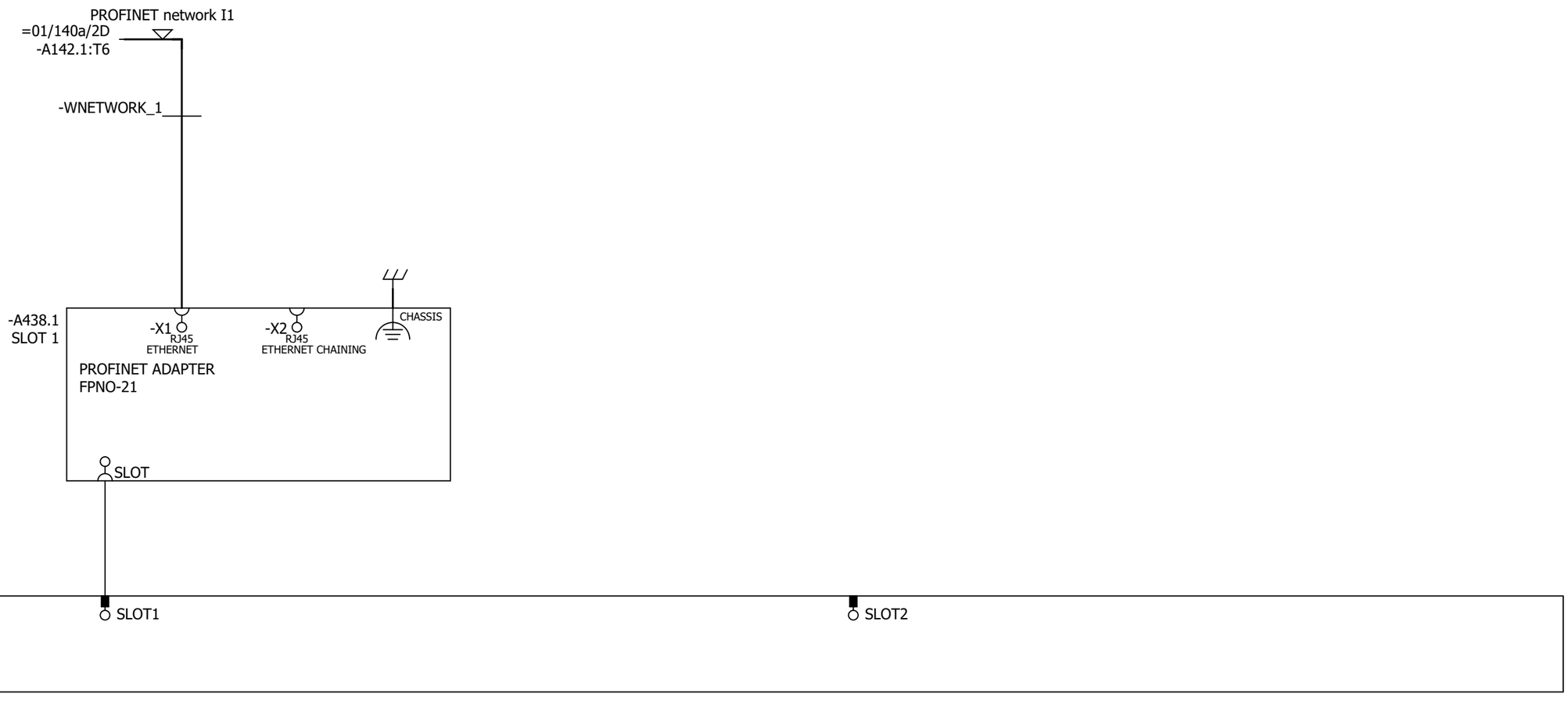

Cust. Doc. No.	Prep. Sky-Xin Zhang 02.08.2023	Title OPTION CARDS	Circuit diagram EFS2
Cust. Ref. No.	App.	INV1.04	SAP Doc. No.
Customer WMMP	Project Zhaka Jack-up Lift System	ACS880-107-0078A-3	EPLAN Doc. No. 3ABDC230674 - 1.04
	Zhaka Jack-up Lift System-1	400V	ABB Ref. No.
			Resp. Dept.

Item Des.
= 1.04
+ 1.01.1

Rev. .1 Sheet 041a
Cont. 041b

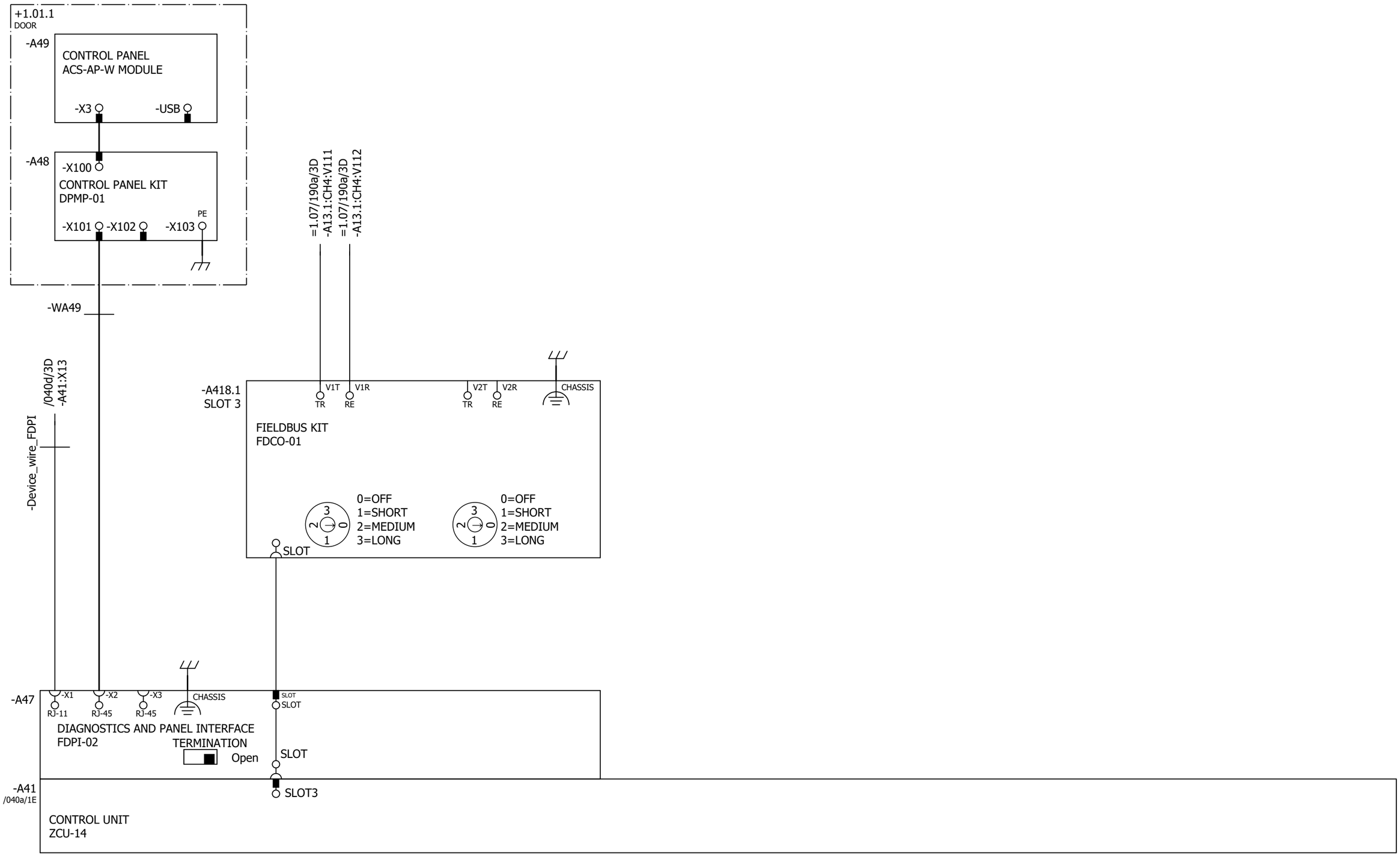

Cust. Doc. No.	Prep. Sky-Xin Zhang 02.08.2023	Title OPTION CARDS	Circuit diagram EFS2	Item Des.
Cust. Ref. No.	App.	INV1.04	SAP Doc. No.	= 1.04
Customer WMMP	Project Zhaka Jack-up Lift System	ACS880-107-0078A-3	EPLAN Doc. No. 3ABDC230674 - 1.04	+ 1.01.1
	Zhaka Jack-up Lift System-1	400V	ABB Ref. No.	Rev. .1 Sheet 041b
			Resp. Dept.	Cont. 061a

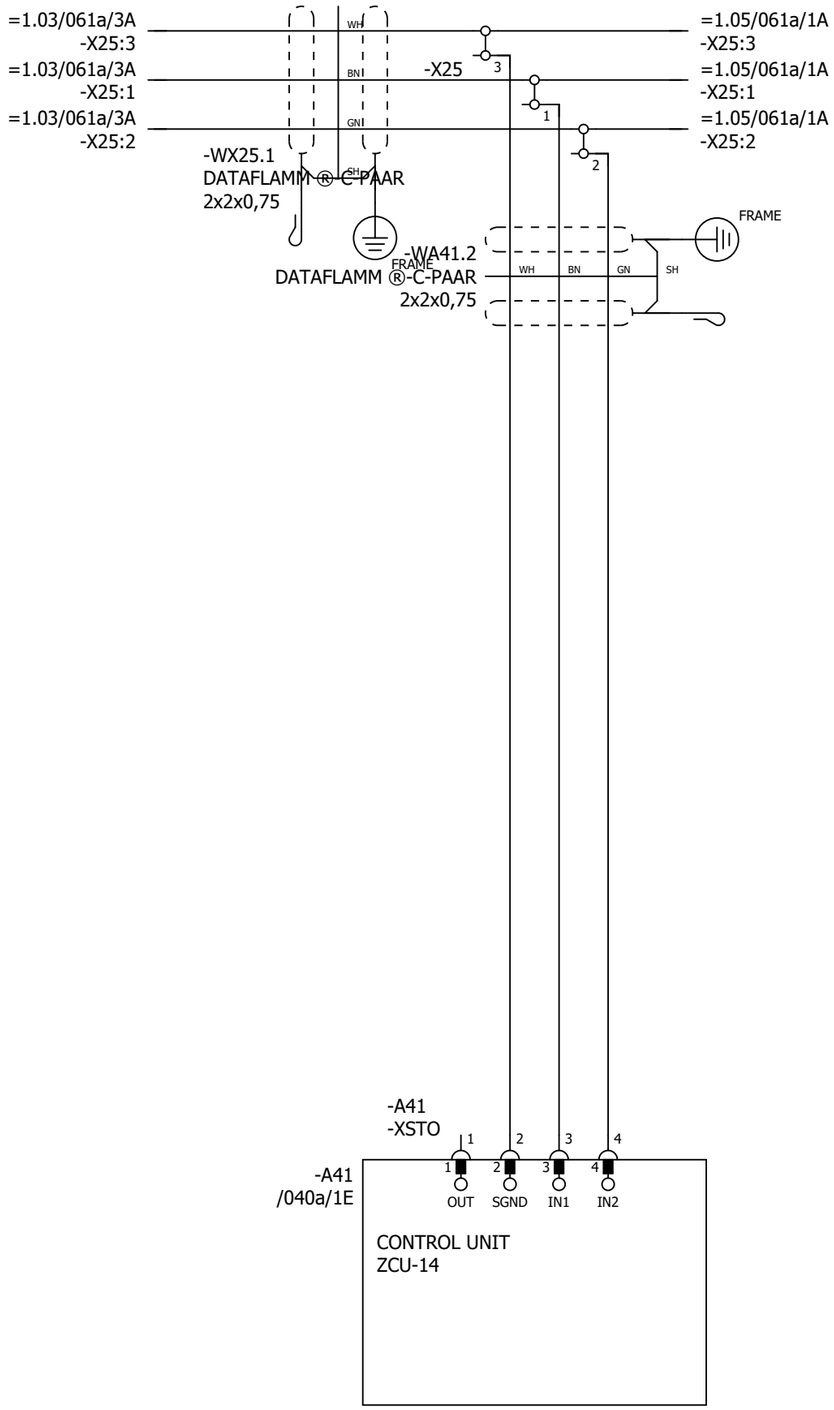

P345812 / 29711

SAFETY CIRCUIT
MACRO REVISION 6
RULES CONVERTED 19.7.2023

Cust. Doc. No.	Prep. Sky-Xin Zhang 02.08.2023	Title SAFETY CIRCUIT	Circuit diagram EFS2	Item Des.	
Cust. Ref. No.	App.	INV1.04	SAP Doc. No.	= 1.04	
Customer WMMP	Project Zhaka Jack-up Lift System	ACS880-107-0078A-3	EPLAN Doc. No. 3ABDC230674 - 1.04	+ 1.01.1	
	Zhaka Jack-up Lift System-1	400V	ABB Ref. No.	Rev. .1	Sheet 061a
			Resp. Dept.	Cont.	&MPC/Part list_1

Part list: 3ABDC230674DU01004

Item	Sort String	Qty.Str	Unit	Component Number	Description and text	Technical data
0010		1.000	ST		ACS880-107-0078A-3+A012+B053+C121+C132+	
0020		1.000	ST		_C206+E210+F272+F287+F288+G300+G307+G315	
0030		1.000	ST		_+G320+G330+G344+H352+H367+J400+K492+L50	
0040		1.000	ST		_3+P913+Q964	
0050		1.000	ST		=1.04	
0060		1.000	ST		+1.01.1,INU3	
0070		1.000	ST		Powerconversionequipment	
0080	-A41_MEM	1.000	PC	3AXD50000006010	MEMORY UNIT KIT ZMU-02	
0090	-T11	1.000	PC	3AUA0000120009-M	ACS880-104-0078A-3+P922	+P922
0100	SCREW	1.000	PC	3AFE68681481	SCREW K30X10 TORX	PT WN1452 ZN
0110	SOFTWARE	1.000	PC	3AUA0000153462	SOFTWARE PRIMARY CONTROL PROGRA	AINF6 FOR ZCU-12/14
0120		1.000	ST		R4imoduleDCfuse	
0130	-F11.1-2	2.000	PC	3AXD50000000219	FUSE FR27UQ69V160T/160A	6.921 CP URQ 27X60MM FERRULE;AR
0140		1.000	ST		R3i-R4imoduleDCfusebase	
0150	(-F11.1-2)	2.000	PC	3AUA0000089227	FUSE HOLDER FUSE BASE US271MI 150A	FUSE BASE US271MI 150A 800V
0160		1.000	ST		24VDCsupplyZCU	
0170	-WA41_1	1.000	PC	3AXD50000005218	WIRE HARNESS 24VDC SUPPLY X51 ZCU V	HALOGEN FREE;X51_A51
0180		1.000	ST		Rooffancontrol	
0190	-WA41_3	1.000	PC	3AXD50000002688	WIRE HARNESS FAN CONTROL MAIN WIRE	HALOGEN FREE;X208_X26.3
0200		1.000	ST		Bottomrowmodulewireharness	
0210	-WT11	1.000	PC	3AXD50000002418	WIRE HARNESS R4I FUSE_MODULE BR V2	HALOGEN FREE;MAIN CIRCUIT WIRE SET
0220		1.000	ST		Optionmodule	
0230	-A418.1	1.000	PC	3AUA0000107392	COMMUNIC. ADAPTER FDCO-01	
0240		1.000	ST		Controlpanel	
0250	-A47	1.000	PC	3AUA0000108650	FIELDBUS KIT FDPI-02	PANEL BUS ADAPTER
0260	-A48	1.000	PC	3AUA0000108878	CONTROL PANEL KIT DPMP-01	DPMP-01
0270	-A49	1.000	PC	3AXD50000025964	CONTROL PANEL ACS-AP-W MODULE	ASSISTANT PANEL WIRELESS CPU1
0280		1.000	ST		DCfusesupervision	
0290	-K11.1-2	2.000	PC	3AXD50000021313	RELAY DEK_REL_G24/21	250 V;6 A;COIL 24VDC
0300		1.000	ST		FieldBus	
0310	-A438.1	1.000	PC	3AXD50000192779	OPTION MODULE FPNO-21	PROFINET IO
0320		1.000	ST		Supplementtorelay	
0330	(-K11.1)	1.000	PC	3AXD50000021312	TERMINAL BLOCK ST EB2_DIK_RD 2716693	2POLE, 6,15 MM PITCH;FOR DEK RELAYS

P345812 / 29711

Cust. Doc. No.	Prep.	Title PART LIST INV1.04 ACS880-107-0078A-3 400V	Item Des. = 1.04 +
Cust. Ref. No.	App.		SAP Doc. No.
Customer WMMP	Project Zhaka Jack-up Lift System Zhaka Jack-up Lift System-1		EPLAN Doc. No. 3ABDC230674 - 1.04
			ABB Ref. No. / Rev. / Sheet Part list_1
			Resp. Dept. / Cont. &EMA/1

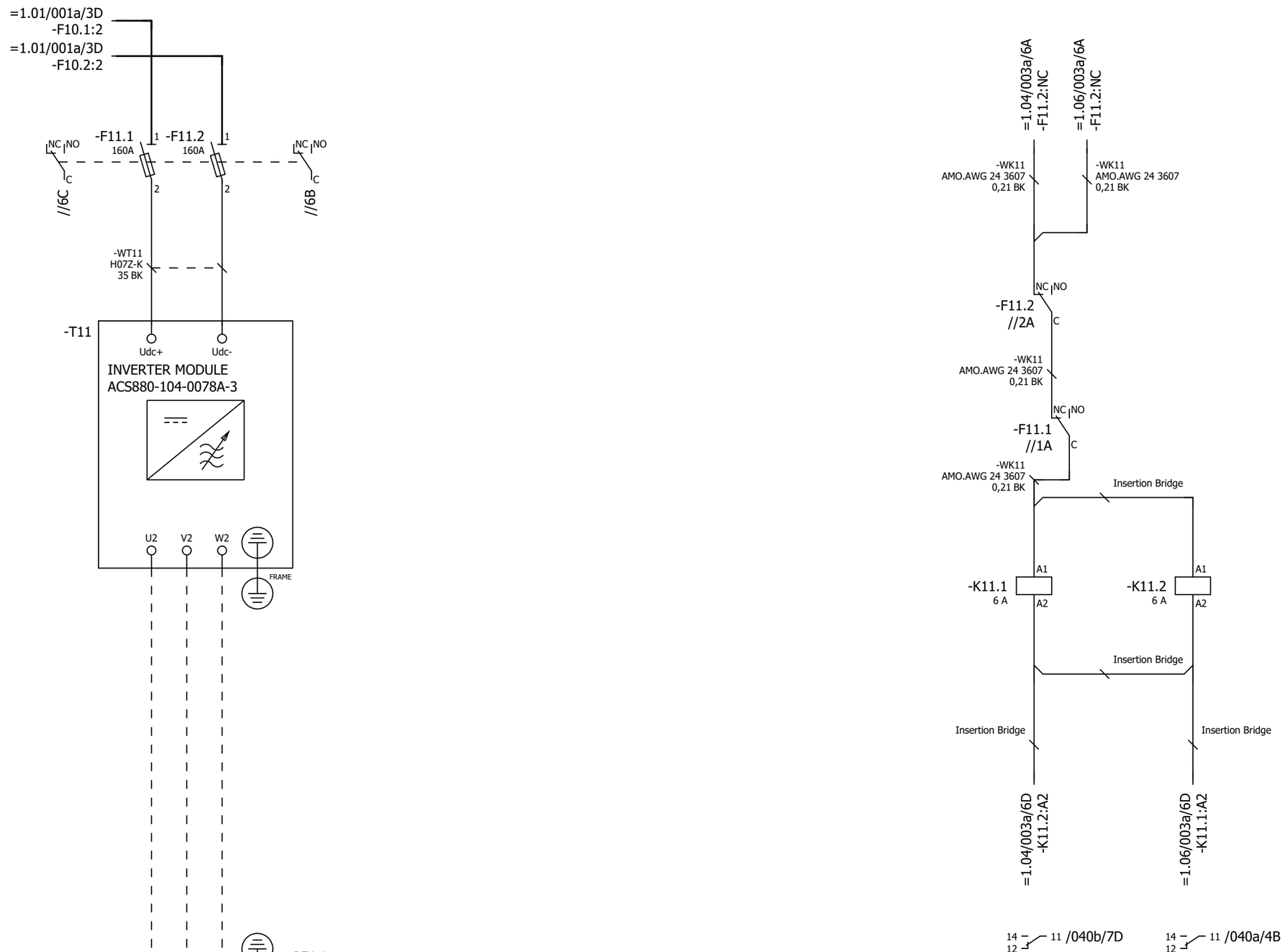

P345812 / 29711

Cust. Doc. No.	Prep. Sky-Xin Zhang 02.08.2023	Title MAIN CIRCUIT	Circuit diagram EFS2
Cust. Ref. No.	App.	INV1.05	SAP Doc. No.
Customer WMMP	Project Zhaka Jack-up Lift System	ACS880-107-0078A-3	EPLAN Doc. No. 3ABDC230674 - 1.05
	Zhaka Jack-up Lift System-1	400V	ABB Ref. No.
			Resp. Dept.

Item Des.
= 1.05
+ 1.01.1

Rev. .1 Sheet 003a
Cont. 040a

Control and status signals	Terminal	Pin
E-STOP FEEDBACK 1 - ESTOP ACTIVE	-XRO1	12
RUNNING 1 - RUNNING	-XRO2	22
FAULT (-1) 1 - NO FAULT	-XRO3	32

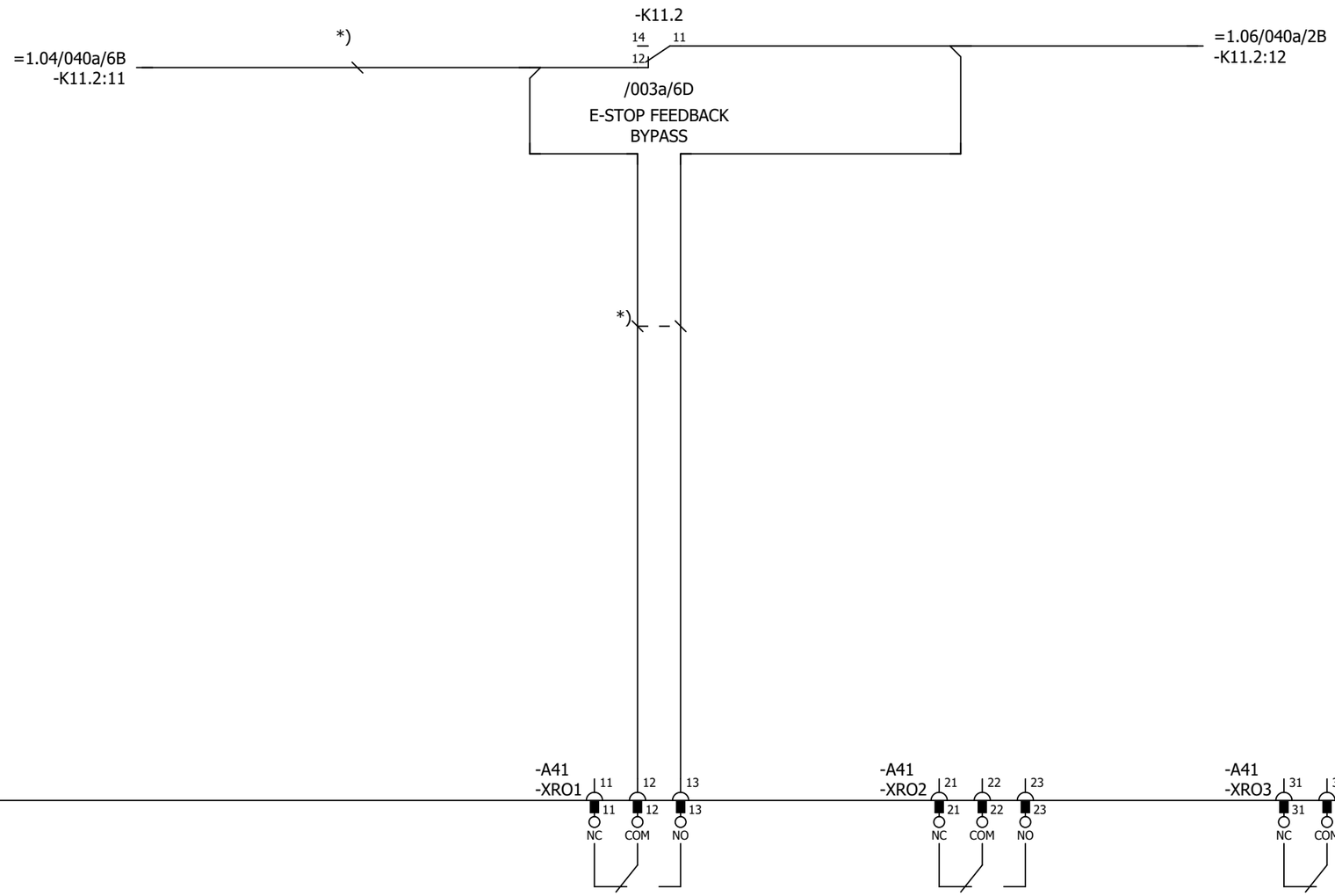

P345812 / 29711

Cust. Doc. No.	Prep. Sky-Xin Zhang 02.08.2023	Title CONTROL BOARD INV1.05 ACS880-107-0078A-3 400V	Circuit diagram EFS2
Cust. Ref. No.	App.		SAP Doc. No.
Customer WMMP	Project Zhaka Jack-up Lift System Zhaka Jack-up Lift System-1		EPLAN Doc. No. 3ABDC230674 - 1.05
			ABB Ref. No.
			Resp. Dept.

Item Des.
= 1.05
+ 1.01.1

Rev. .1 Sheet 040a
Cont. 040b

Control and status signals	Terminal	Pin
DIGITAL INTERLOCK	-XD24	1
START/STOP 1 - START	-XDI	1
FORWARD/REVERSE 1 - REVERSE	-XDI	2
RESET	-XDI	3
EMERGENCY STOP 0 - ACTIVE	-XDI	4
NOT SPECIFIED	-XDI	5
DI6 NOT IN USE	-XDI	6
OUTPUT: READY	-XDIO	1
OUTPUT: RUNNING	-XDIO	2

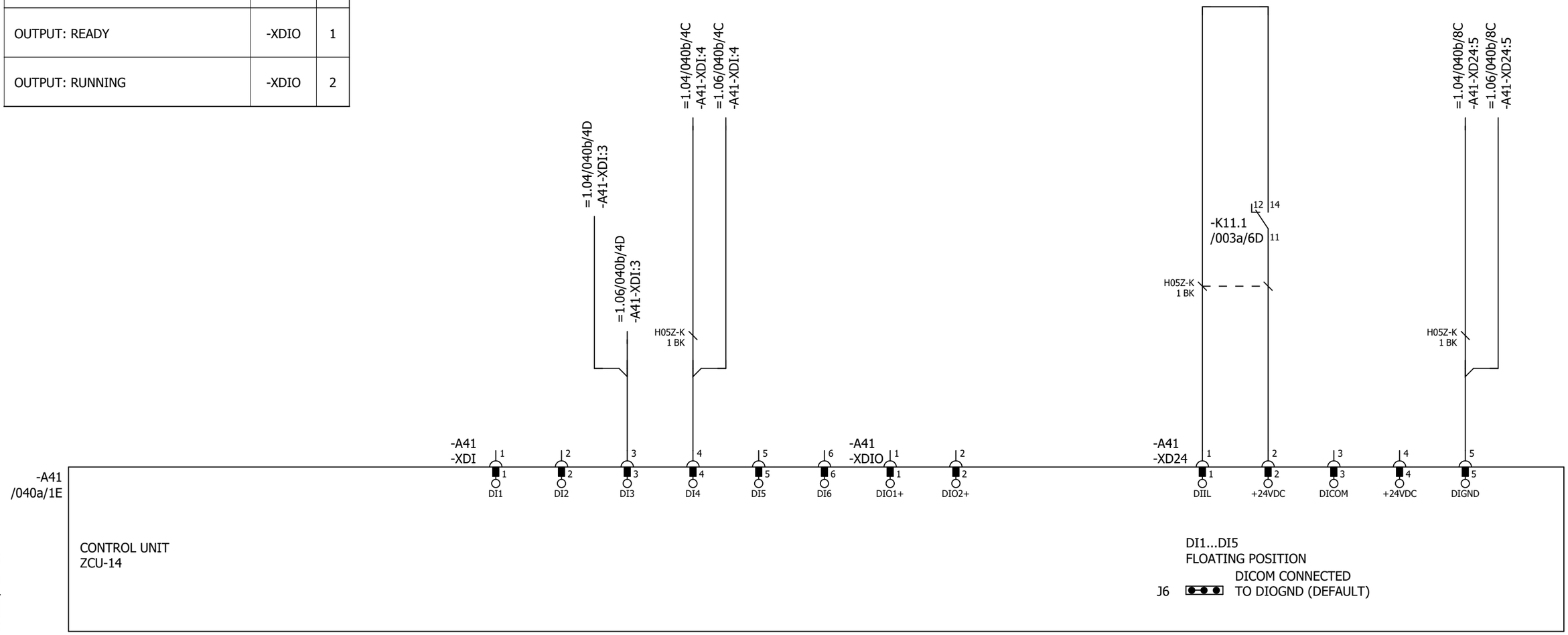

P345812 / 29711

Cust. Doc. No.	Prep. Sky-Xin Zhang 02.08.2023	Title CONTROL BOARD INV1.05 ACS880-107-0078A-3 400V	Circuit diagram EFS2
Cust. Ref. No.	App.		SAP Doc. No.
Customer WMMP	Project Zhaka Jack-up Lift System Zhaka Jack-up Lift System-1		EPLAN Doc. No. 3ABDC230674 - 1.05
			ABB Ref. No.
			Resp. Dept.

Item Des.
= 1.05
+ 1.01.1

Rev. .1 Sheet 040b
Cont. 040c

Control and status signals	Terminal	Pin
MOTOR TEMP. MONITORING 0(2)…10V	-XAI	4
AI2 NOT SPECIFIED BY DEFAULT NOT IN USE 0(4)…20mA	-XAI	6
CURR SOU MOT TEMP MONIT 0(4)...20mA	-XAO	1
CURRENT 0(4)…20mA ↔ 0(4)…MOTOR CURRENT	-XAO	3

P345812 / 29711

Cust. Doc. No.	Prep. Sky-Xin Zhang 02.08.2023	Title CONTROL BOARD INV1.05 ACS880-107-0078A-3 400V	Circuit diagram EFS2
Cust. Ref. No.	App.		SAP Doc. No.
Customer WMMP	Project Zhaka Jack-up Lift System Zhaka Jack-up Lift System-1		EPLAN Doc. No. 3ABDC230674 - 1.05
			ABB Ref. No.
			Resp. Dept.

Item Des.
= 1.05
+ 1.01.1

Rev. .1 Sheet 040c
Cont. 040d

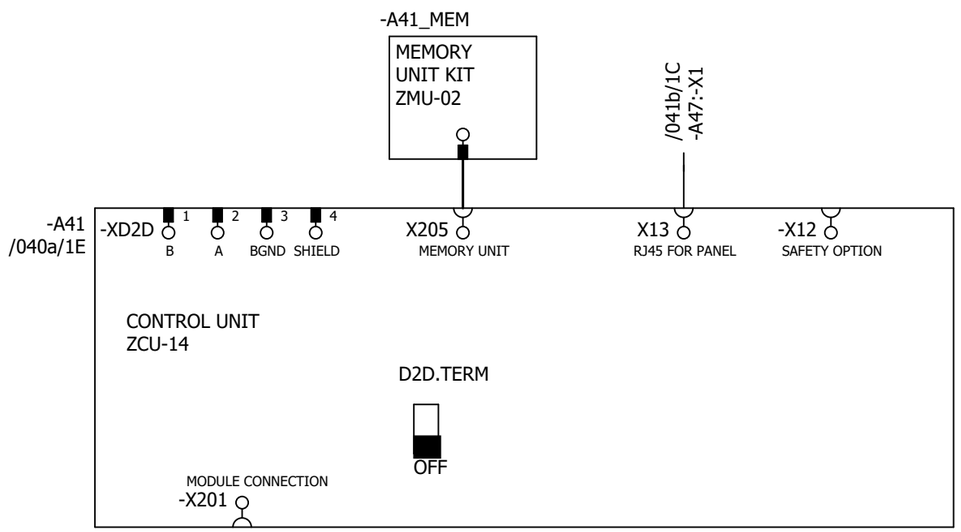

P345812 / 29711

Cust. Doc. No.	Prep. Sky-Xin Zhang 02.08.2023	Title CONTROL BOARD INV1.05 ACS880-107-0078A-3 400V	Circuit diagram EFS2
Cust. Ref. No.	App.		SAP Doc. No.
Customer WMMP	Project Zhaka Jack-up Lift System Zhaka Jack-up Lift System-1		EPLAN Doc. No. 3ABDC230674 - 1.05
			ABB Ref. No.
			Resp. Dept.

Item Des.	= 1.05 + 1.01.1
Rev. .1	Sheet 040d
Cont.	041a

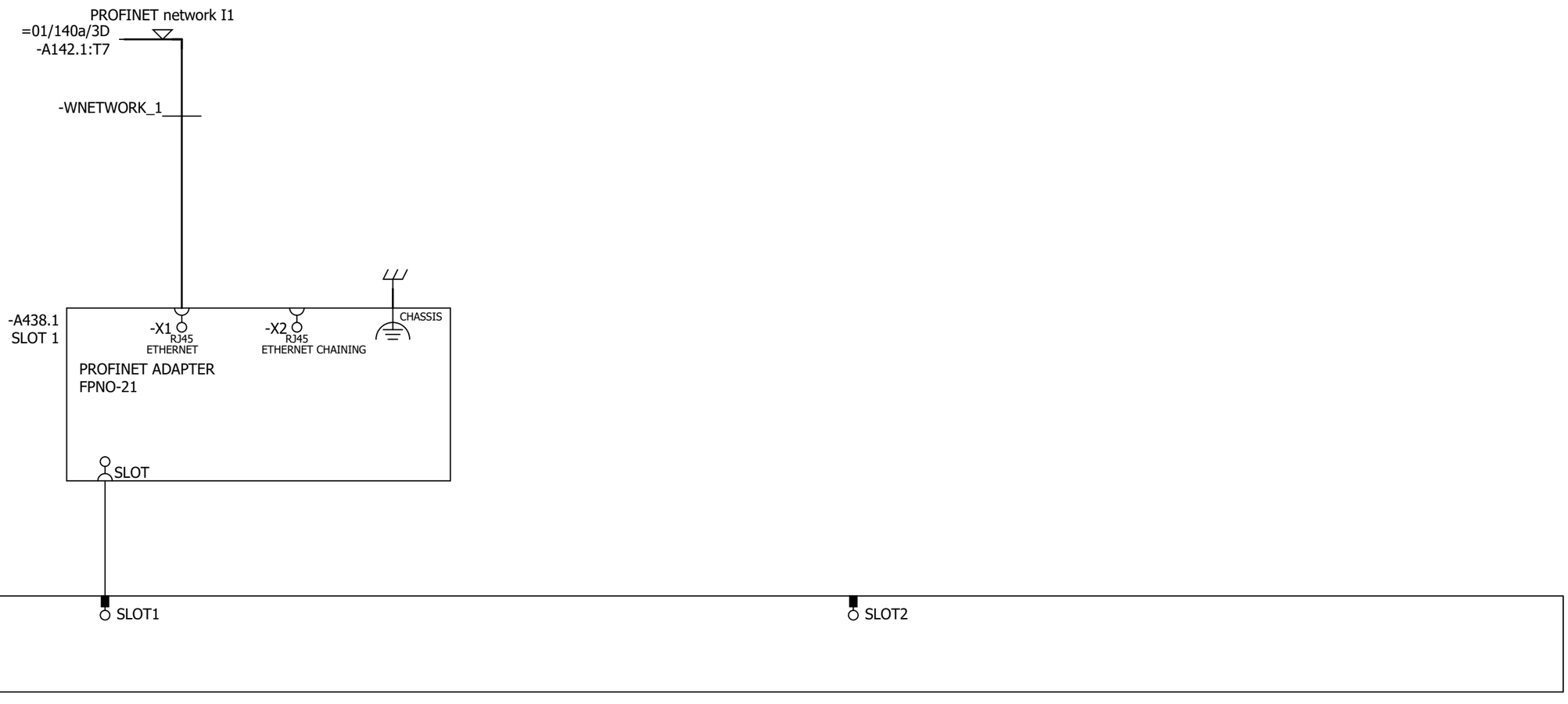

P345812 / 29711

Cust. Doc. No.	Prep. Sky-Xin Zhang 02.08.2023	Title OPTION CARDS INV1.05 ACS880-107-0078A-3 400V	Circuit diagram EFS2
Cust. Ref. No.	App.		SAP Doc. No.
Customer WMMP	Project Zhaka Jack-up Lift System Zhaka Jack-up Lift System-1		EPLAN Doc. No. 3ABDC230674 - 1.05
			ABB Ref. No.
			Resp. Dept.

Item Des.	= 1.05 + 1.01.1
Rev. .1	Sheet 041a
Cont.	041b

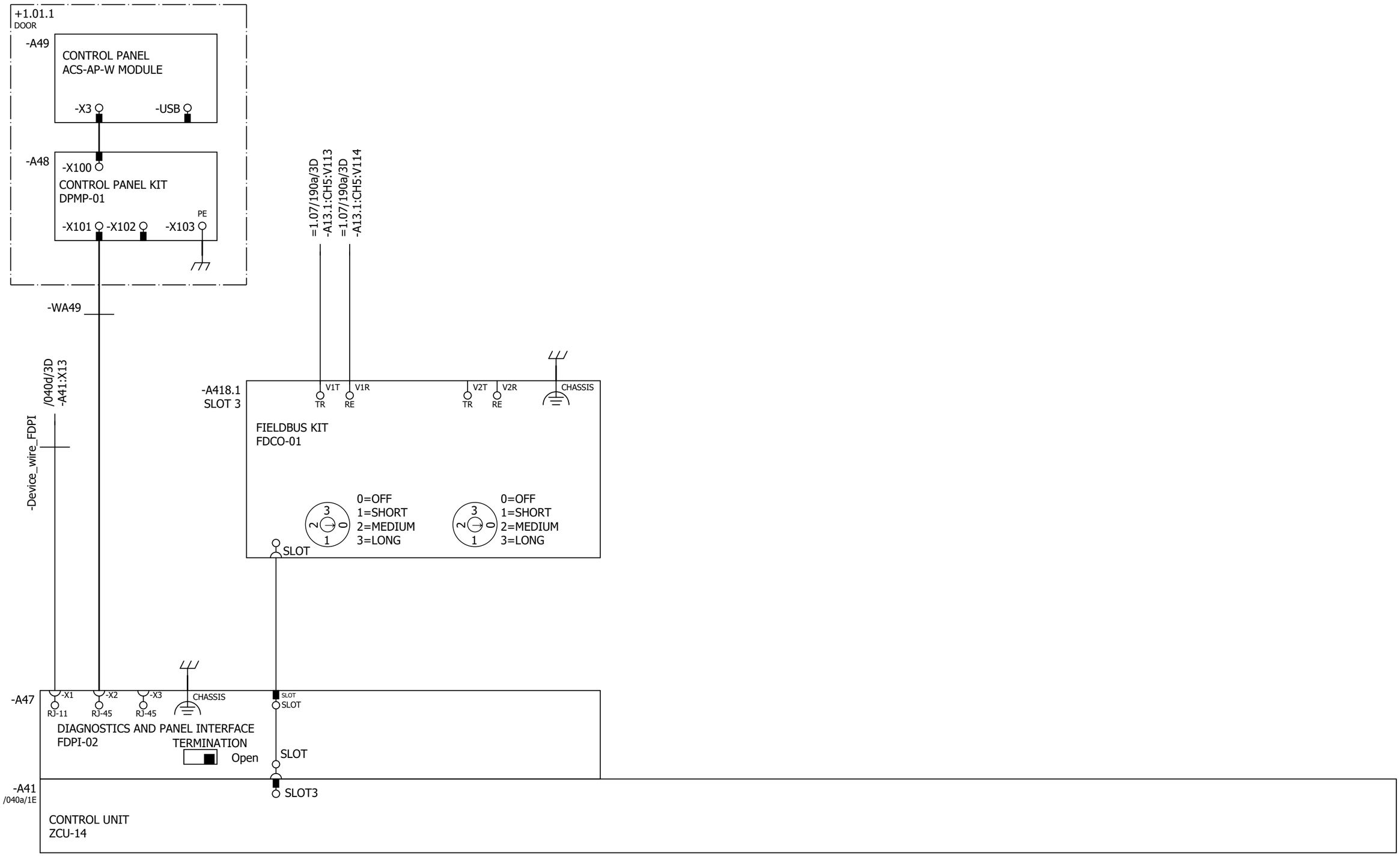

Cust. Doc. No.	Prep. Sky-Xin Zhang 02.08.2023	Title OPTION CARDS	Circuit diagram EFS2	Item Des.
Cust. Ref. No.	App.	INV1.05	SAP Doc. No.	= 1.05
Customer WMMP	Project Zhaka Jack-up Lift System	ACS880-107-0078A-3	EPLAN Doc. No. 3ABDC230674 - 1.05	+ 1.01.1
	Zhaka Jack-up Lift System-1	400V	ABB Ref. No.	Rev. .1 Sheet 041b
			Resp. Dept.	Cont. 061a

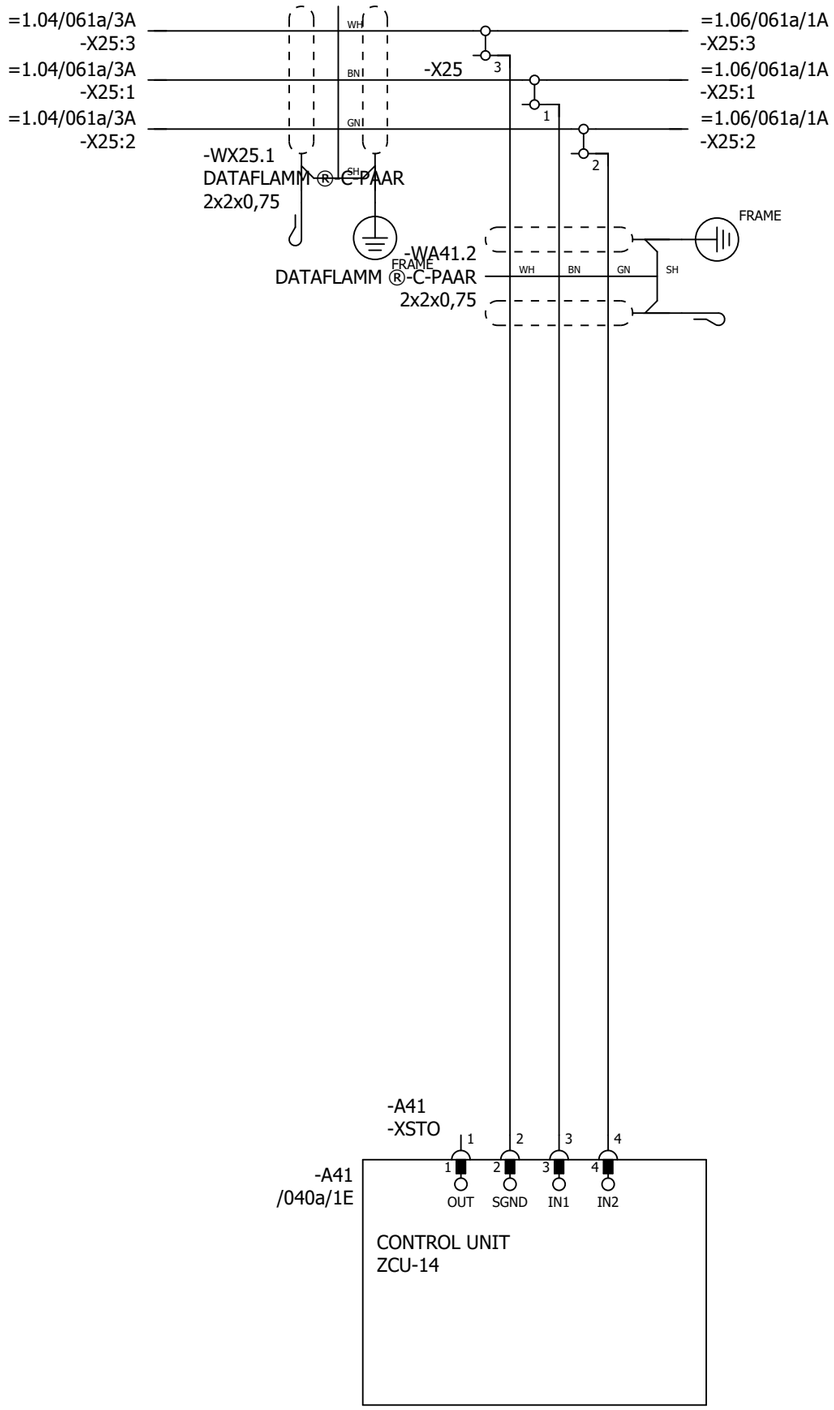

P345812 / 29711

SAFETY CIRCUIT
MACRO REVISION 6
RULES CONVERTED 19.7.2023

Cust. Doc. No.	Prep. Sky-Xin Zhang 02.08.2023	Title SAFETY CIRCUIT	Circuit diagram EFS2	Item Des.	
Cust. Ref. No.	App.	INV1.05	SAP Doc. No.	= 1.05	
Customer WMMP	Project Zhaka Jack-up Lift System	ACS880-107-0078A-3	EPLAN Doc. No. 3ABDC230674 - 1.05	+ 1.01.1	
	Zhaka Jack-up Lift System-1	400V	ABB Ref. No.	Rev. .1	Sheet 061a
			Resp. Dept.	Cont.	&MPC/Part list_1

Part list: 3ABDC230674DU01005

Item	Sort String	Qty.Str	Unit	Component Number	Description and text	Technical data
0010		1.000	ST		ACS880-107-0078A-3+A012+B053+C121+C132+	
0020		1.000	ST		_C206+E210+F272+F287+F288+G300+G307+G315	
0030		1.000	ST		_+G320+G330+G344+H352+H367+K450+K492+L50	
0040		1.000	ST		_3+P913+Q964	
0050		1.000	ST		=1.05	
0060		1.000	ST		+1.01.1,INU3	
0070		1.000	ST		Powerconversionequipment	
0080	-A41_MEM	1.000	PC	3AXD50000006010	MEMORY UNIT KIT ZMU-02	
0090	-T11	1.000	PC	3AUA0000120009-M	ACS880-104-0078A-3+P922	+P922
0100	SCREW	1.000	PC	3AFE68681481	SCREW K30X10 TORX	PT WN1452 ZN
0110	SOFTWARE	1.000	PC	3AUA0000153462	SOFTWARE PRIMARY CONTROL PROGRA	AINF6 FOR ZCU-12/14
0120		1.000	ST		R4imoduleDCfuse	
0130	-F11.1-2	2.000	PC	3AXD50000000219	FUSE FR27UQ69V160T/160A	6.921 CP URQ 27X60MM FERRULE;AR
0140		1.000	ST		R3i-R4imoduleDCfusebase	
0150	(-F11.1-2)	2.000	PC	3AUA0000089227	FUSE HOLDER FUSE BASE US271MI 150A	FUSE BASE US271MI 150A 800V
0160		1.000	ST		24VDCsupplyZCU	
0170	-WA41_1	1.000	PC	3AXD50000005218	WIRE HARNESS 24VDC SUPPLY X51 ZCU V	HALOGEN FREE;X51_A51
0180		1.000	ST		Rooffancontrol	
0190	-WA41_3	1.000	PC	3AXD50000002688	WIRE HARNESS FAN CONTROL MAIN WIRE	HALOGEN FREE;X208_X26.3
0200		1.000	ST		Bottomrowmodulewireharness	
0210	-WT11	1.000	PC	3AXD50000002418	WIRE HARNESS R4I FUSE_MODULE BR V2	HALOGEN FREE;MAIN CIRCUIT WIRE SET
0220		1.000	ST		Optionmodule	
0230	-A418.1	1.000	PC	3AUA0000107392	COMMUNIC. ADAPTER FDCO-01	
0240		1.000	ST		Controlpanel	
0250	-A47	1.000	PC	3AUA0000108650	FIELDBUS KIT FDPI-02	PANEL BUS ADAPTER
0260		1.000	ST		DCfusesupervision	
0270	-K11.1-2	2.000	PC	3AXD50000021313	RELAY DEK_REL_G24/21	250 V;6 A;COIL 24VDC
0280		1.000	ST		FieldBus	
0290	-A438.1	1.000	PC	3AXD50000192779	OPTION MODULE FPNO-21	PROFINET IO
0300		1.000	ST		Supplementtorelay	
0310	(-K11.1)	1.000	PC	3AXD50000021312	TERMINAL BLOCK ST EB2_DIK_RD 2716693	2POLE, 6,15 MM PITCH;FOR DEK RELAYS

P345812 / 29711

Cust. Doc. No.	Prep.	Title PART LIST INV1.05 ACS880-107-0078A-3 400V	Item Des. = 1.05 +
Cust. Ref. No.	App.		SAP Doc. No.
Customer WMMP	Project Zhaka Jack-up Lift System Zhaka Jack-up Lift System-1		EPLAN Doc. No. 3ABDC230674 - 1.05
			ABB Ref. No. / Rev. / Sheet Part list_1
			Resp. Dept. / Cont. &EMA/1

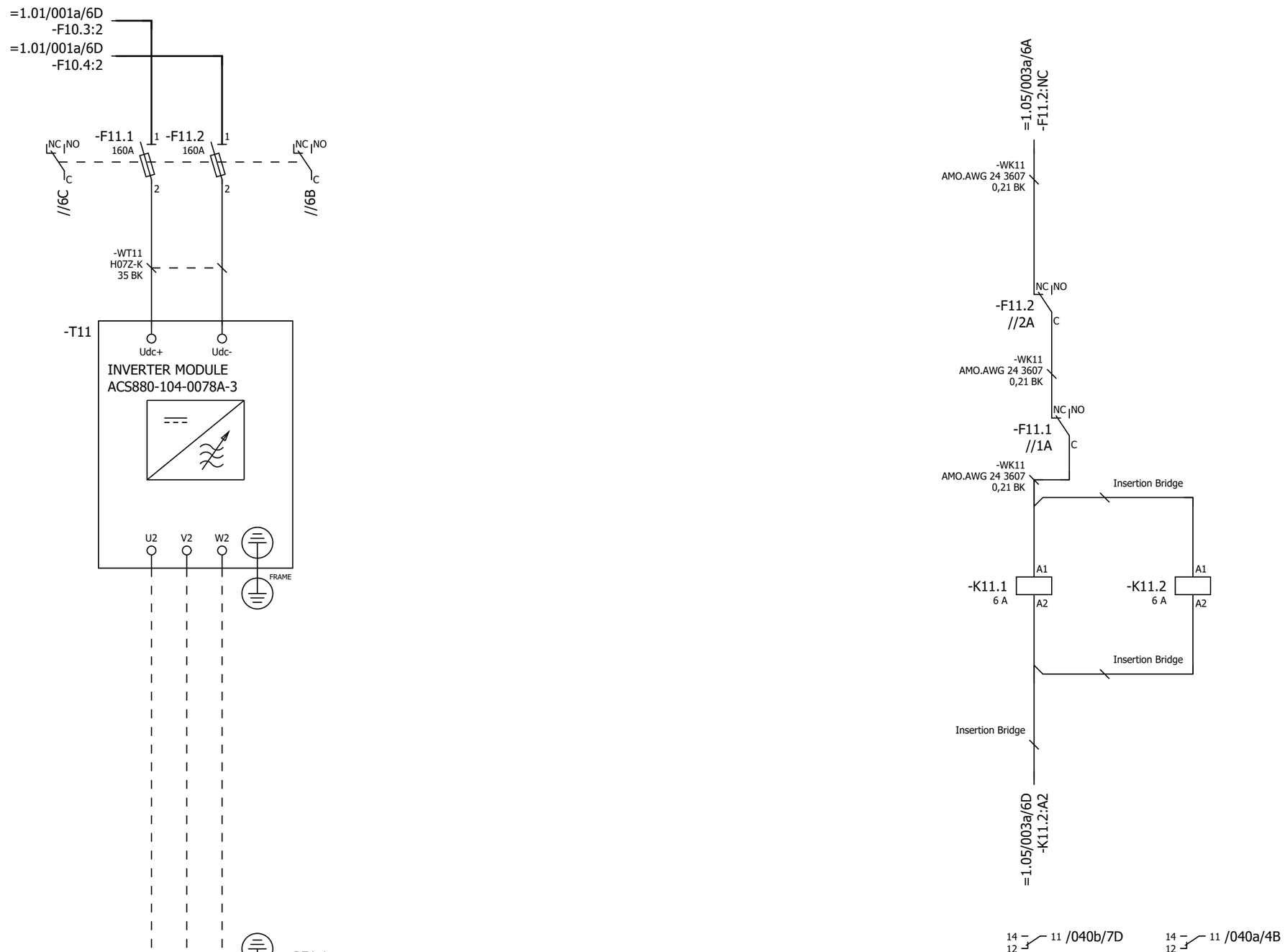

P345812 / 29711

Cust. Doc. No.	Prep. Sky-Xin Zhang 02.08.2023	Title MAIN CIRCUIT	Circuit diagram EFS2	Item Des.	
Cust. Ref. No.	App.	INV1.06	SAP Doc. No.	= 1.06	
Customer WMMP	Project Zhaka Jack-up Lift System	ACS880-107-0078A-3	EPLAN Doc. No. 3ABDC230674 - 1.06	+ 1.01.1	
	Zhaka Jack-up Lift System-1	400V	ABB Ref. No.	Rev. .1	Sheet 003a
			Resp. Dept.	Cont.	040a

Control and status signals	Terminal	Pin
E-STOP FEEDBACK 1 - ESTOP ACTIVE	-XRO1	12
RUNNING 1 - RUNNING	-XRO2	22
FAULT (-1) 1 - NO FAULT	-XRO3	32

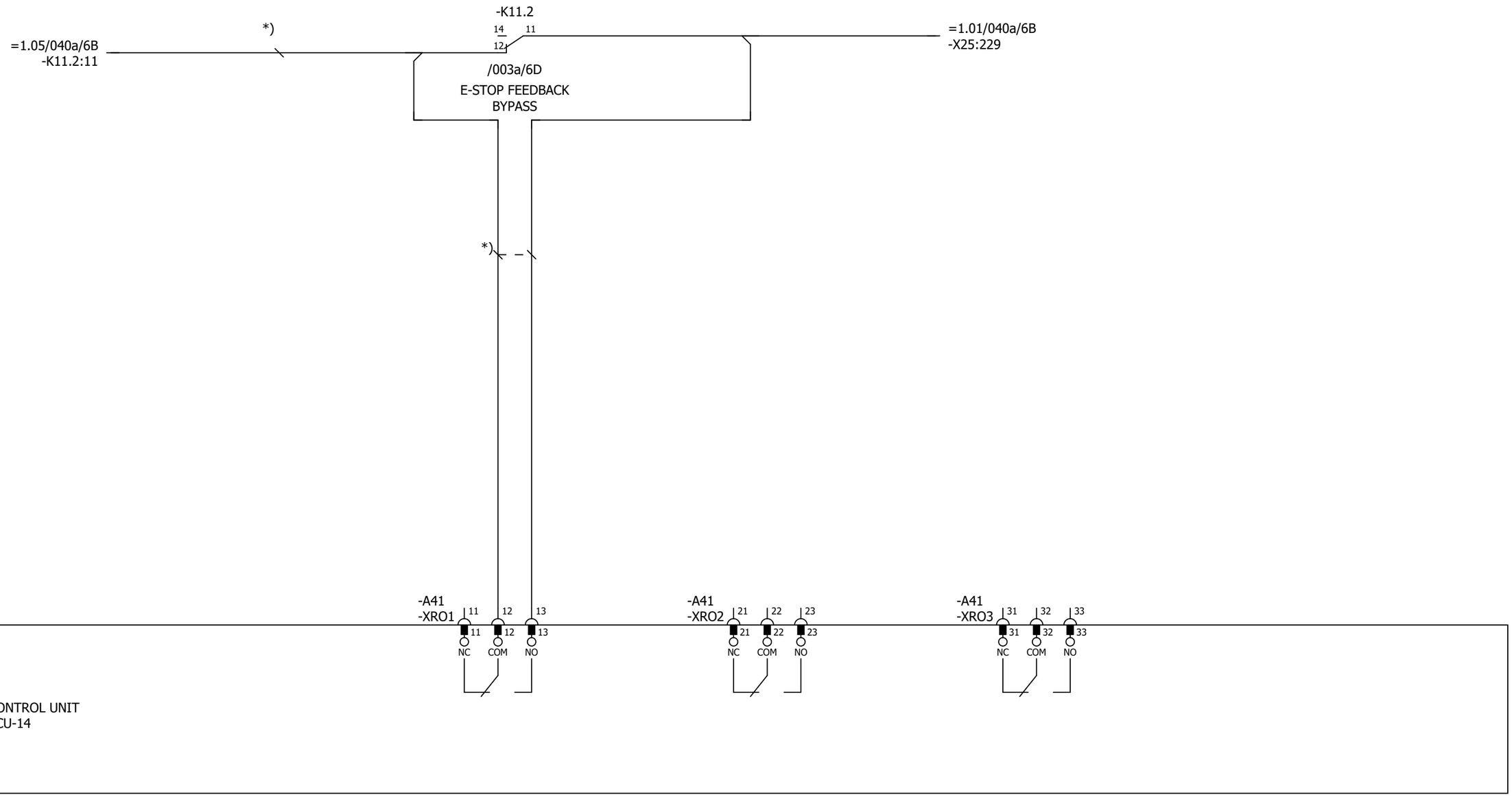

Cust. Doc. No.	Prep. Sky-Xin Zhang 02.08.2023	Title CONTROL BOARD INV1.06 ACS880-107-0078A-3 400V	Circuit diagram EFS2	Item Des.	
Cust. Ref. No.	App.		SAP Doc. No.	= 1.06 + 1.01.1	
Customer WMMP	Project Zhaka Jack-up Lift System Zhaka Jack-up Lift System-1		EPLAN Doc. No. 3ABDC230674 - 1.06		
			ABB Ref. No.	Rev. .1	Sheet 040a
			Resp. Dept.	Cont.	040b

Control and status signals	Terminal	Pin
DIGITAL INTERLOCK	-XD24	1
START/STOP 1 - START	-XDI	1
FORWARD/REVERSE 1 - REVERSE	-XDI	2
RESET	-XDI	3
EMERGENCY STOP 0 - ACTIVE	-XDI	4
NOT SPECIFIED	-XDI	5
DI6 NOT IN USE	-XDI	6
OUTPUT: READY	-XDIO	1
OUTPUT: RUNNING	-XDIO	2

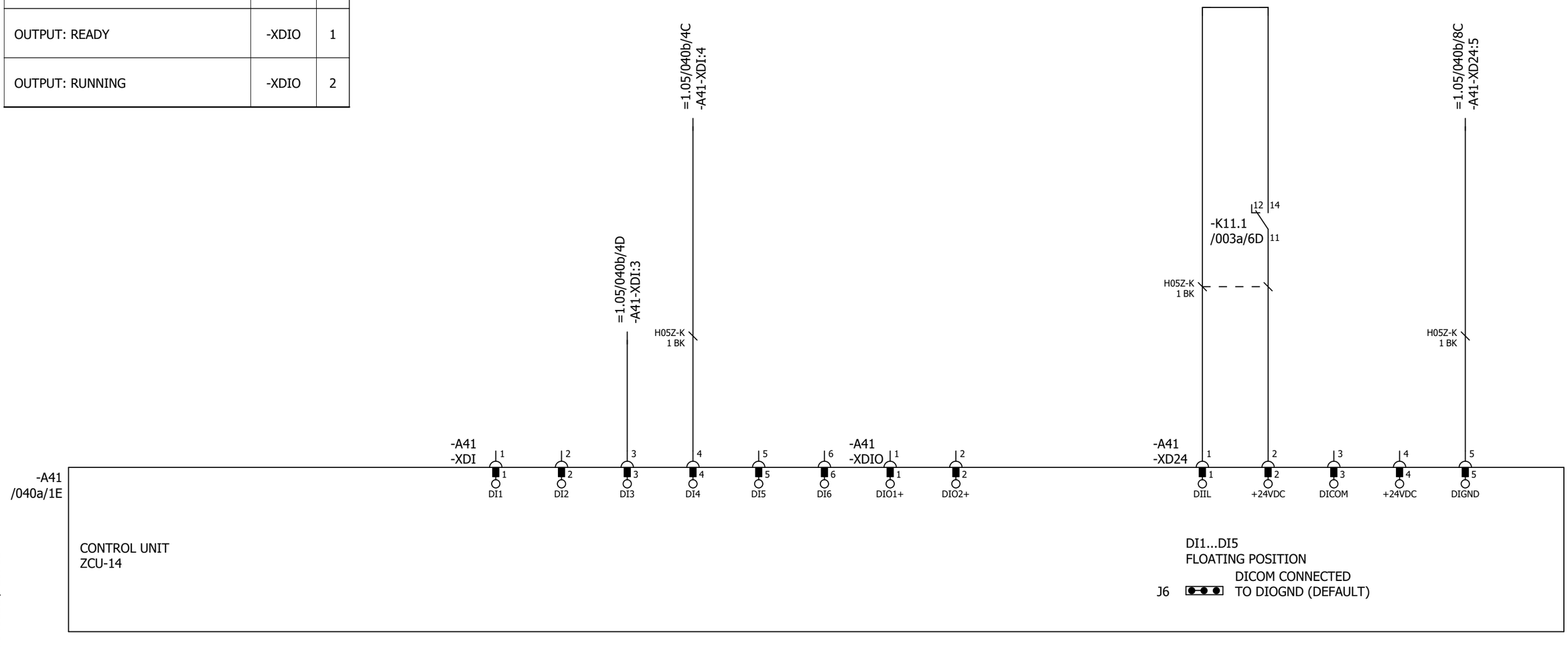

Cust. Doc. No.	Prep. Sky-Xin Zhang 02.08.2023	Title CONTROL BOARD INV1.06 ACS880-107-0078A-3 400V	Circuit diagram EFS2
Cust. Ref. No.	App.		SAP Doc. No.
Customer WMMP	Project Zhaka Jack-up Lift System Zhaka Jack-up Lift System-1		EPLAN Doc. No. 3ABDC230674 - 1.06
			ABB Ref. No.
			Resp. Dept.

Item Des.
= 1.06
+ 1.01.1

Rev. .1 Sheet 040b
Cont. 040c

Control and status signals	Terminal	Pin
MOTOR TEMP. MONITORING 0(2)…10V	-XAI	4
AI2 NOT SPECIFIED BY DEFAULT NOT IN USE 0(4)…20mA	-XAI	6
CURR SOU MOT TEMP MONIT 0(4)...20mA	-XAO	1
CURRENT 0(4)…20mA ↔ 0(4)…MOTOR CURRENT	-XAO	3

P345812 / 29711

Cust. Doc. No.	Prep. Sky-Xin Zhang 02.08.2023	Title CONTROL BOARD INV1.06 ACS880-107-0078A-3 400V	Circuit diagram EFS2
Cust. Ref. No.	App.		SAP Doc. No.
Customer WMMP	Project Zhaka Jack-up Lift System Zhaka Jack-up Lift System-1		EPLAN Doc. No. 3ABDC230674 - 1.06
			ABB Ref. No.
			Resp. Dept.

Item Des.
= 1.06
+ 1.01.1

Rev. .1 Sheet 040c
Cont. 040d

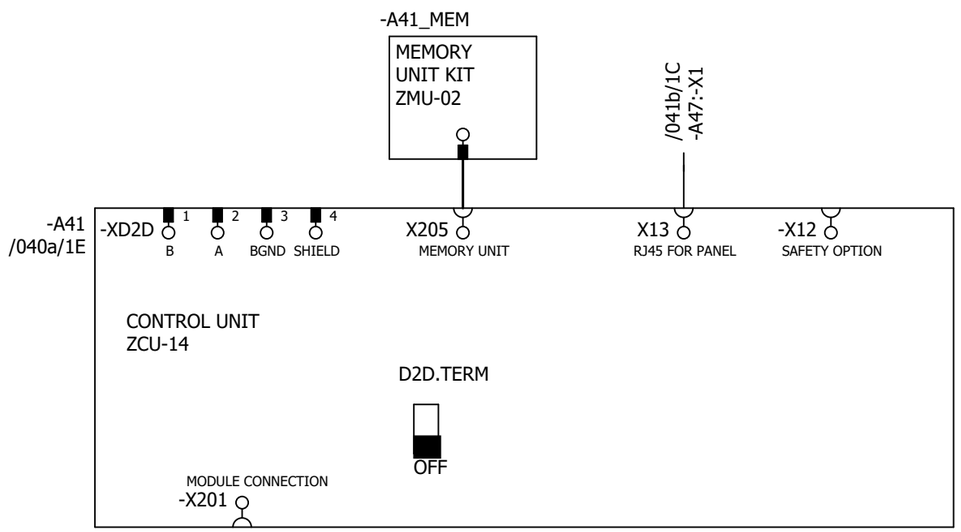

P345812 / 29711

Cust. Doc. No.	Prep. Sky-Xin Zhang 02.08.2023	Title CONTROL BOARD	Circuit diagram EFS2
Cust. Ref. No.	App.	INV1.06	SAP Doc. No.
Customer WMMP	Project Zhaka Jack-up Lift System	ACS880-107-0078A-3	EPLAN Doc. No. 3ABDC230674 - 1.06
	Zhaka Jack-up Lift System-1	400V	ABB Ref. No.
			Resp. Dept.

Item Des.
= 1.06
+ 1.01.1

Rev. .1 Sheet 040d
Cont. 041a

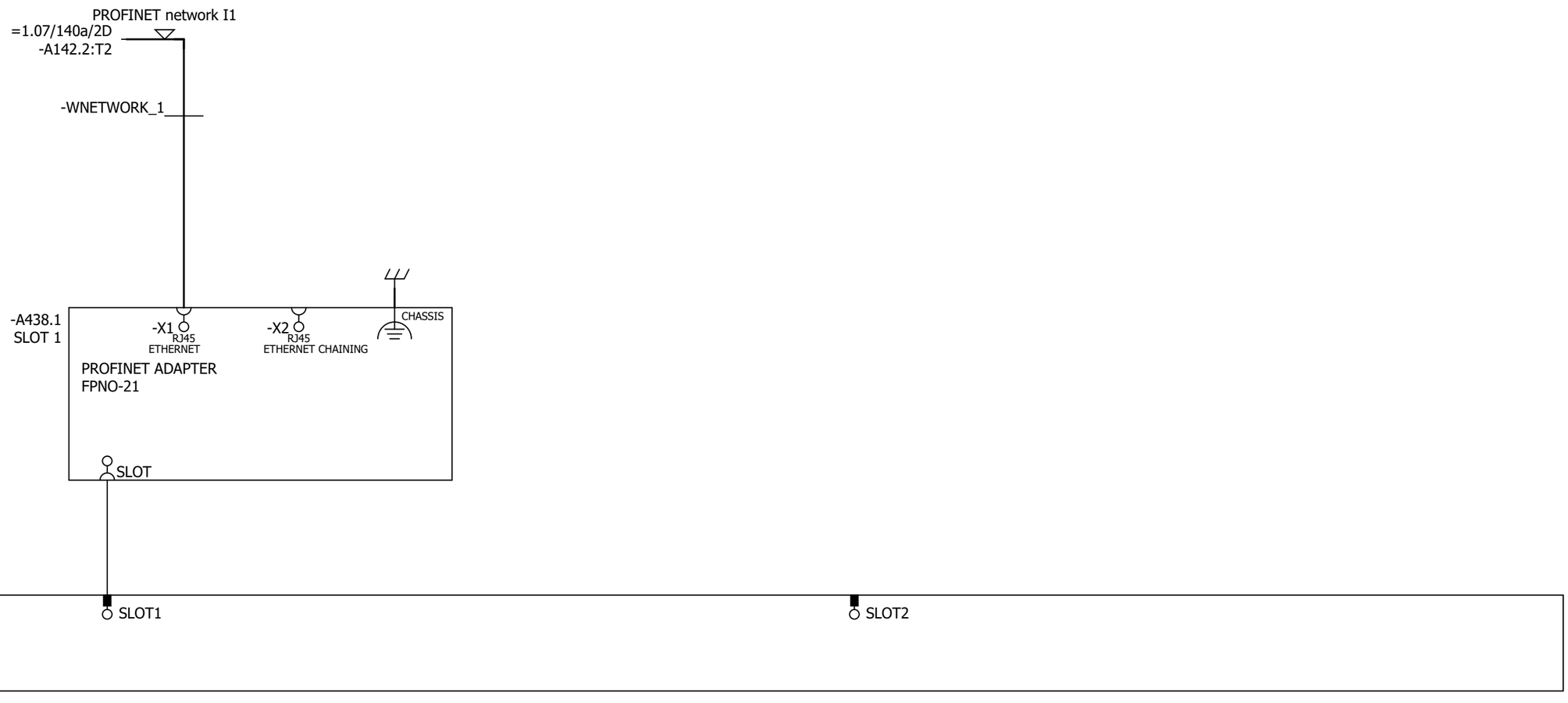

P345812 / 29711

Cust. Doc. No.	Prep. Sky-Xin Zhang 02.08.2023	Title OPTION CARDS INV1.06 ACS880-107-0078A-3 400V	Circuit diagram EFS2
Cust. Ref. No.	App.		SAP Doc. No.
Customer WMMP	Project Zhaka Jack-up Lift System Zhaka Jack-up Lift System-1		EPLAN Doc. No. 3ABDC230674 - 1.06
			ABB Ref. No.
			Resp. Dept.

Item Des.
= 1.06
+ 1.01.1

Rev. .1 Sheet 041a
Cont. 041b

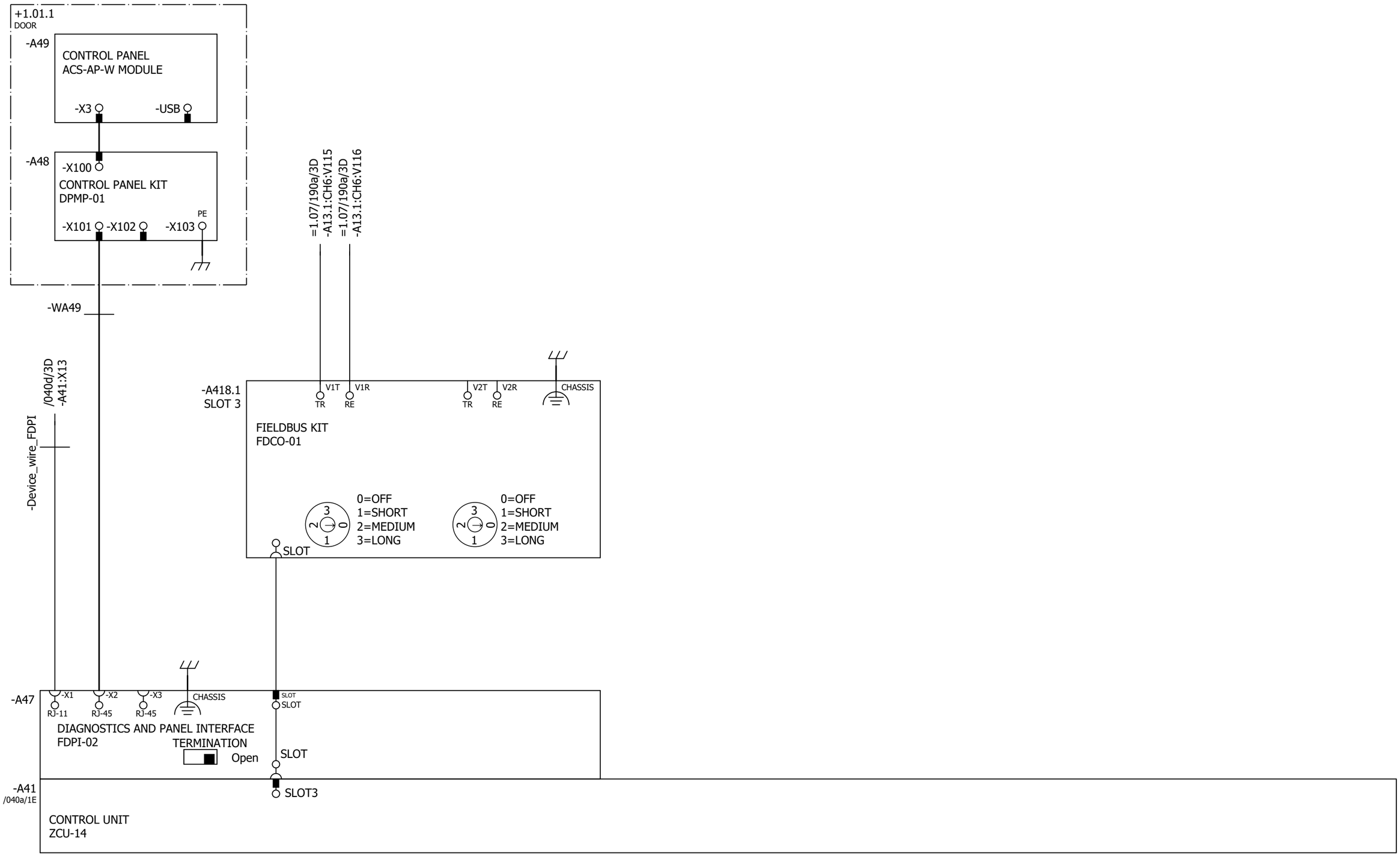

Cust. Doc. No.	Prep. Sky-Xin Zhang 02.08.2023	Title OPTION CARDS	Circuit diagram EFS2	Item Des.
Cust. Ref. No.	App.	INV1.06	SAP Doc. No.	= 1.06
Customer WMMP	Project Zhaka Jack-up Lift System	ACS880-107-0078A-3	EPLAN Doc. No. 3ABDC230674 - 1.06	+ 1.01.1
	Zhaka Jack-up Lift System-1	400V	ABB Ref. No.	Rev. .1 Sheet 041b
			Resp. Dept.	Cont. 061a

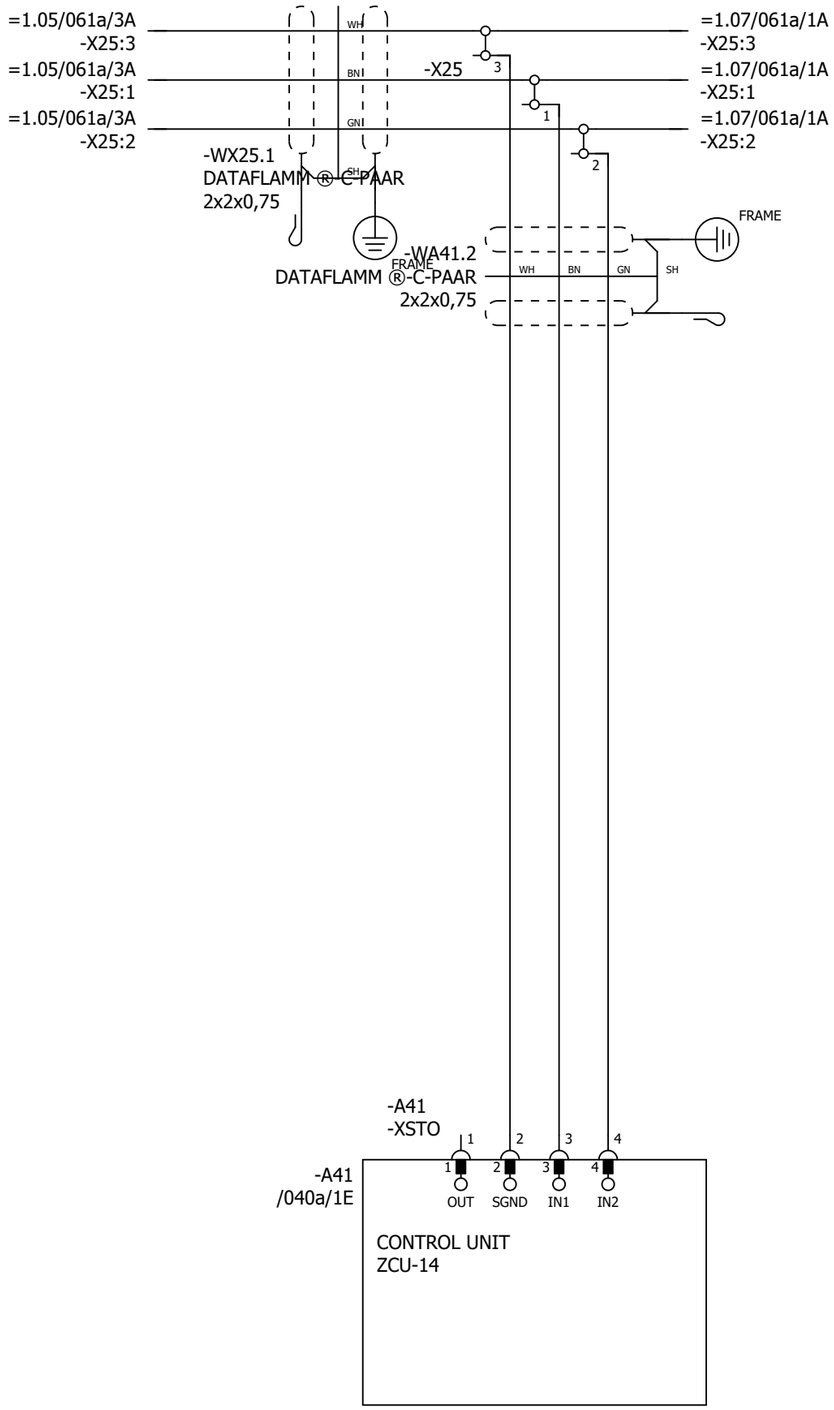

P345812 / 29711

SAFETY CIRCUIT
MACRO REVISION 6
RULES CONVERTED 19.7.2023

Cust. Doc. No.	Prep. Sky-Xin Zhang 02.08.2023	Title SAFETY CIRCUIT	Circuit diagram EFS2	Item Des.	
Cust. Ref. No.	App.	INV1.06	SAP Doc. No.	= 1.06	
Customer WMMP	Project Zhaka Jack-up Lift System	ACS880-107-0078A-3	EPLAN Doc. No. 3ABDC230674 - 1.06	+ 1.01.1	
	Zhaka Jack-up Lift System-1	400V	ABB Ref. No.	Rev. .1	Sheet 061a
			Resp. Dept.	Cont.	&MPC/Part list_1

Part list: 3ABDC230674DU01006

Item	Sort String	Qty.Str	Unit	Component Number	Description and text	Technical data
0010		1.000	ST		ACS880-107-0078A-3+A012+B053+C121+C132+	
0020		1.000	ST		_C206+E210+F272+F287+F288+G300+G307+G315	
0030		1.000	ST		_+G320+G330+G344+H352+H367+K450+K492+K49	
0040		1.000	ST		_3+L503+P913+Q964	
0050		1.000	ST		=1.06	
0060		1.000	ST		+1.01.1,INU3	
0070		1.000	ST		Powerconversionequipment	
0080	-A41_MEM	1.000	PC	3AXD50000006010	MEMORY UNIT KIT ZMU-02	
0090	-T11	1.000	PC	3AUA0000120009-M	ACS880-104-0078A-3+P922	+P922
0100	SCREW	1.000	PC	3AFE68681481	SCREW K30X10 TORX	PT WN1452 ZN
0110	SOFTWARE	1.000	PC	3AUA0000153462	SOFTWARE PRIMARY CONTROL PROGRA	AINF6 FOR ZCU-12/14
0120		1.000	ST		R4imoduleDCfuse	
0130	-F11.1-2	2.000	PC	3AXD50000000219	FUSE FR27UQ69V160T/160A	6.921 CP URQ 27X60MM FERRULE;AR
0140		1.000	ST		R3i-R4imoduleDCfusebase	
0150	(-F11.1-2)	2.000	PC	3AUA0000089227	FUSE HOLDER FUSE BASE US271MI 150A	FUSE BASE US271MI 150A 800V
0160		1.000	ST		24VDCsupplyZCU	
0170	-WA41_1	1.000	PC	3AXD50000005218	WIRE HARNESS 24VDC SUPPLY X51 ZCU V	HALOGEN FREE;X51_A51
0180		1.000	ST		Rooffancontrol	
0190	-WA41_3	1.000	PC	3AXD50000002688	WIRE HARNESS FAN CONTROL MAIN WIRE	HALOGEN FREE;X208_X26.3
0200		1.000	ST		Bottomrowmodulewireharness	
0210	-WT11	1.000	PC	3AXD50000002418	WIRE HARNESS R4I FUSE_MODULE BR V2	HALOGEN FREE;MAIN CIRCUIT WIRE SET
0220		1.000	ST		Optionmodule	
0230	-A418.1	1.000	PC	3AUA0000107392	COMMUNIC. ADAPTER FDCO-01	
0240		1.000	ST		Controlpanel	
0250	-A47	1.000	PC	3AUA0000108650	FIELDBUS KIT FDPI-02	PANEL BUS ADAPTER
0260		1.000	ST		DCfusesupervision	
0270	-K11.1-2	2.000	PC	3AXD50000021313	RELAY DEK_REL_G24/21	250 V;6 A;COIL 24VDC
0280		1.000	ST		Profinetswitch	
0290		1.000	ST		FieldBus	
0300	-A438.1	1.000	PC	3AXD50000192779	OPTION MODULE FPNO-21	PROFINET IO
0310		1.000	ST		Supplementtorelay	
0320	(-K11.1)	1.000	PC	3AXD50000021312	TERMINAL BLOCK ST EB2_DIK_RD 2716693	2POLE, 6,15 MM PITCH;FOR DEK RELAYS

P345812 / 29711

Cust. Doc. No.	Prep.	Title PART LIST INV1.06 ACS880-107-0078A-3 400V	Item Des. = 1.06 +
Cust. Ref. No.	App.	SAP Doc. No.	
Customer WMMP	Project Zhaka Jack-up Lift System Zhaka Jack-up Lift System-1	EPLAN Doc. No. 3ABDC230674 - 1.06	
		ABB Ref. No.	Rev. / Sheet Part list_1
		Resp. Dept.	Cont. &EMA/1

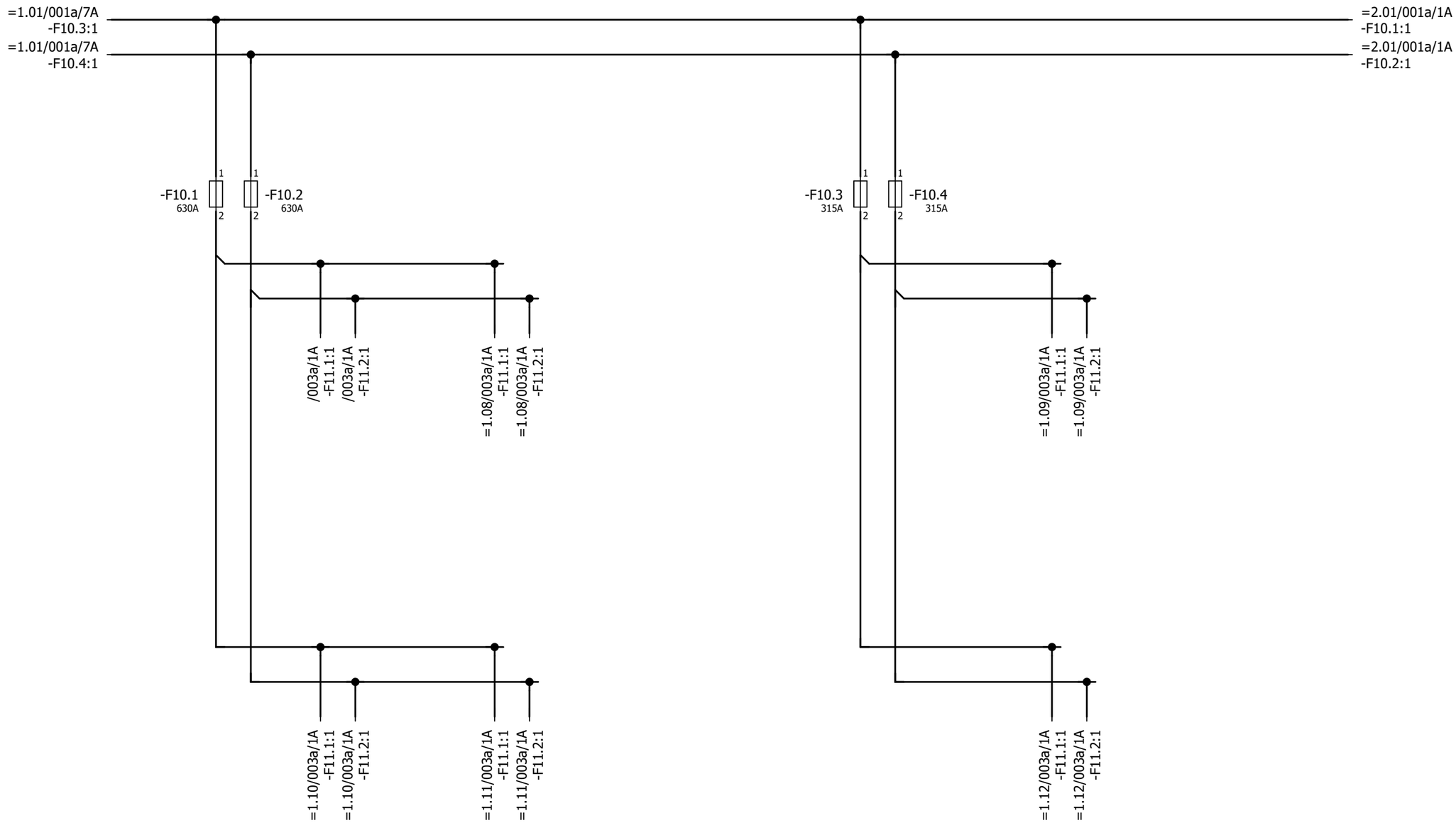

P345812 / 29711

Cust. Doc. No.	Prep. Sky-Xin Zhang 02.08.2023	Title MAIN CIRCUIT	Circuit diagram EFS2
Cust. Ref. No.	App.	INV1.07	SAP Doc. No.
Customer WMMP	Project Zhaka Jack-up Lift System	ACS880-107-0078A-3	EPLAN Doc. No. 3ABDC230674 - 1.07
	Zhaka Jack-up Lift System-1	400V	ABB Ref. No.
			Resp. Dept.

Item Des.
= 1.07
+ 1.07.1

Rev. .1 Sheet 001a
Cont. 003a

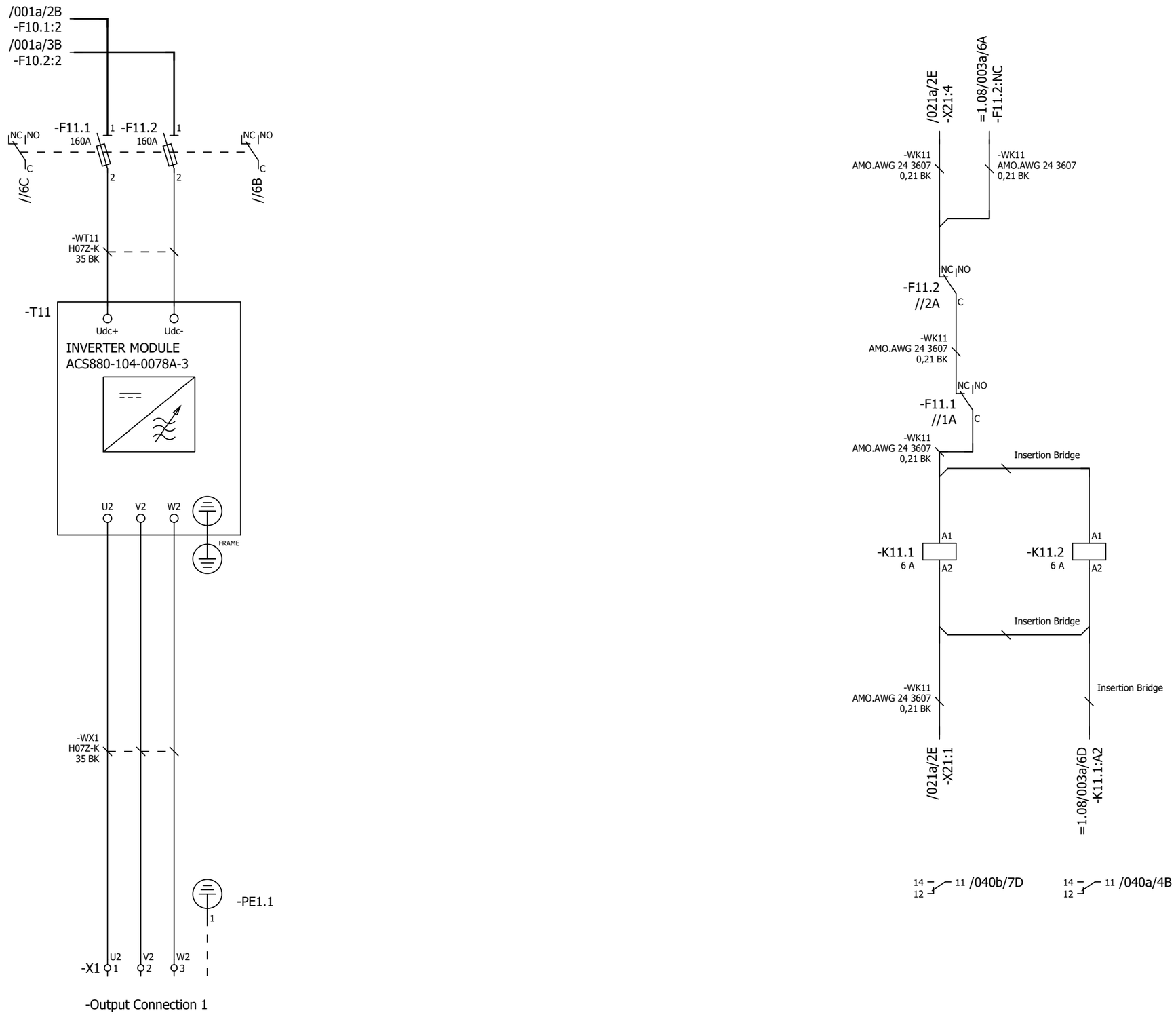

P345812 / 29711

Cust. Doc. No.	Prep. Sky-Xin Zhang 02.08.2023	Title MAIN CIRCUIT	Circuit diagram EFS2
Cust. Ref. No.	App.	INV1.07	SAP Doc. No.
Customer WMMP	Project Zhaka Jack-up Lift System	ACS880-107-0078A-3	EPLAN Doc. No. 3ABDC230674 - 1.07
	Zhaka Jack-up Lift System-1	400V	ABB Ref. No.
			Resp. Dept.

Item Des.
= 1.07
+ 1.07.1

Rev. .1 Sheet 003a
Cont. 020a

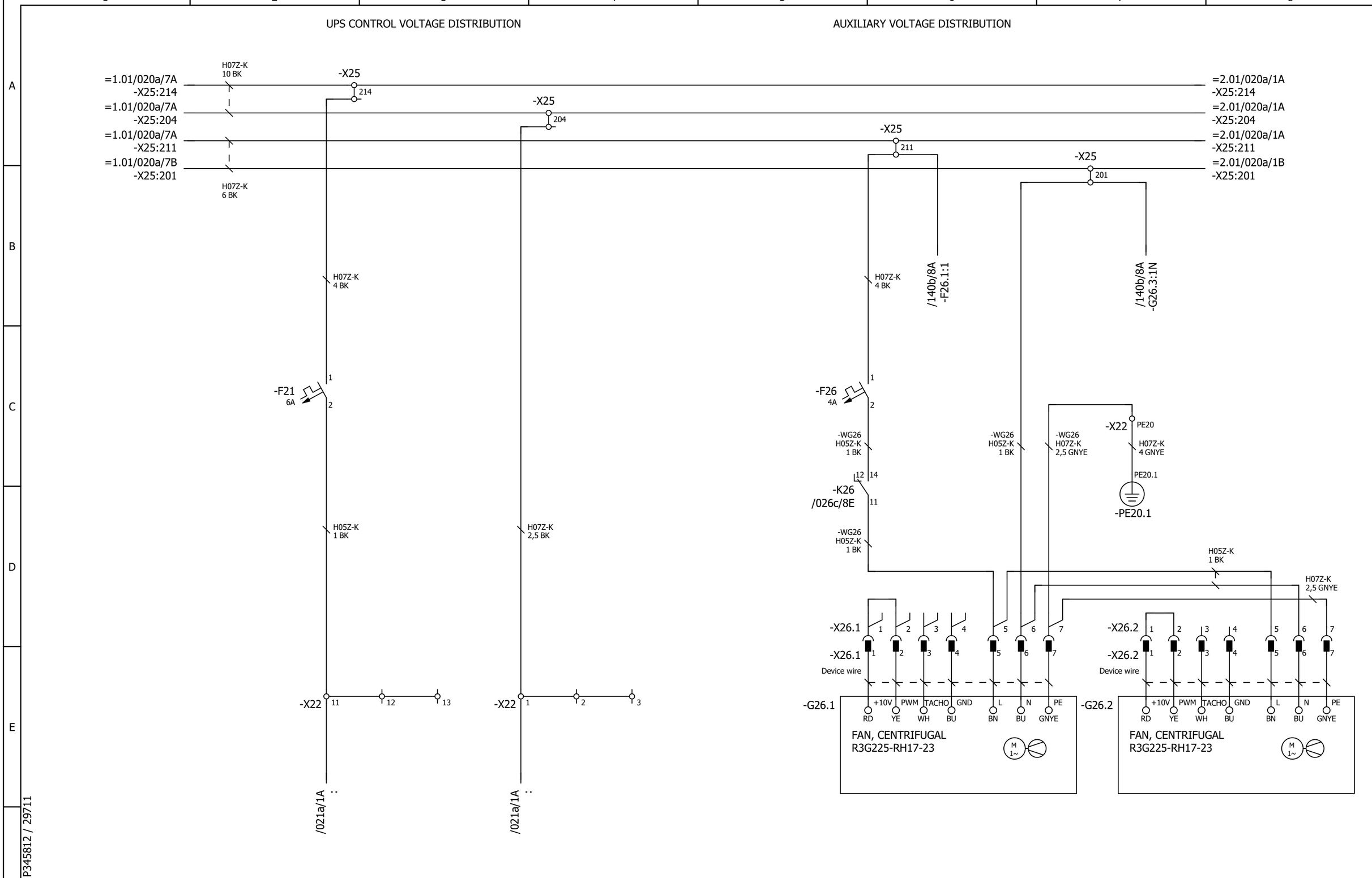

P345812 / 29711

Cust. Doc. No.	Prep. Sky-Xin Zhang 02.08.2023	Title AUXILIARY VOLTAGE DISTRIBUTION	Circuit diagram EFS2	Item Des.	
Cust. Ref. No.	App.	INV1.07	SAP Doc. No.	= 1.07	
Customer WMMP	Project Zhaka Jack-up Lift System	ACS880-107-0078A-3	EPLAN Doc. No. 3ABDC230674 - 1.07	+ 1.07.1	
	Zhaka Jack-up Lift System-1	400V	ABB Ref. No.	Rev. .1	Sheet 020a
			Resp. Dept.	Cont.	021a

24V CONTROL VOLTAGE DISTRIBUTION

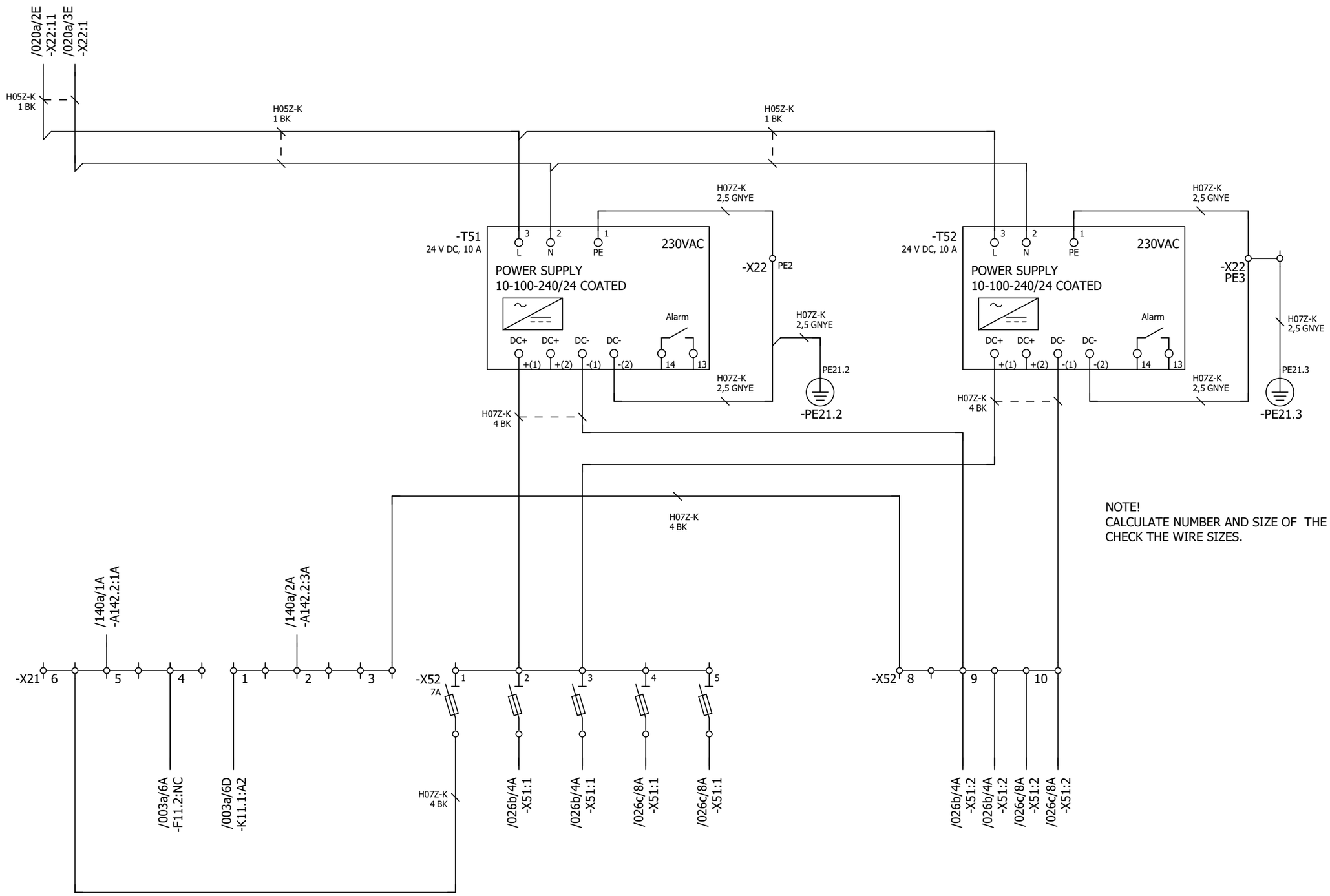

NOTE!
CALCULATE NUMBER AND SIZE OF THE POWER.
CHECK THE WIRE SIZES.

P345812 / 29711

Cust. Doc. No.	Prep. Sky-Xin Zhang 02.08.2023	Title AUXILIARY VOLTAGE DISTRIBUTION	Circuit diagram EFS2	Item Des.	
Cust. Ref. No.	App.	INV1.07	SAP Doc. No.	= 1.07	
Customer WMMP	Project Zhaka Jack-up Lift System	ACS880-107-0078A-3	EPLAN Doc. No. 3ABDC230674 - 1.07	+ 1.07.1	
	Zhaka Jack-up Lift System-1	400V	ABB Ref. No.	Rev. .1	Sheet 021a
			Resp. Dept.	Cont.	026a

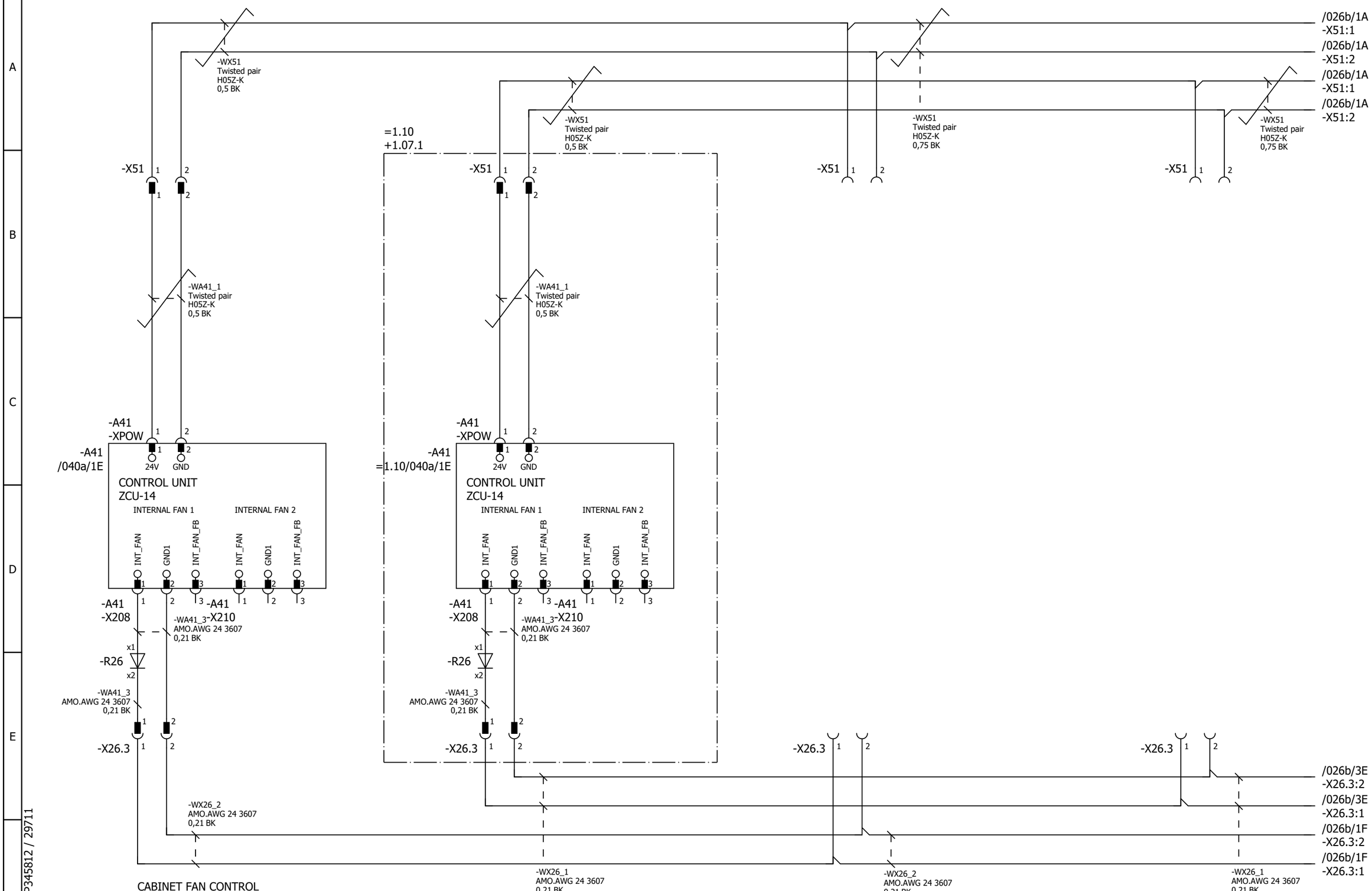

Cust. Doc. No.	Prep. Sky-Xin Zhang 02.08.2023	Title CABINET FAN CONTROL ZCU UPS, 24V FSO, FEA	Circuit diagram EFS2 / Item Des.
Cust. Ref. No.	App.	INV1.07	SAP Doc. No. / = 1.07
Customer WMMP	Project Zhaka Jack-up Lift System	ACS880-107-0078A-3	EPLAN Doc. No. 3ABDC230674 - 1.07 / + 1.07.1
	Zhaka Jack-up Lift System-1	400V	ABB Ref. No. / Rev. .1 / Sheet 026a
			Resp. Dept. / Cont. 026b

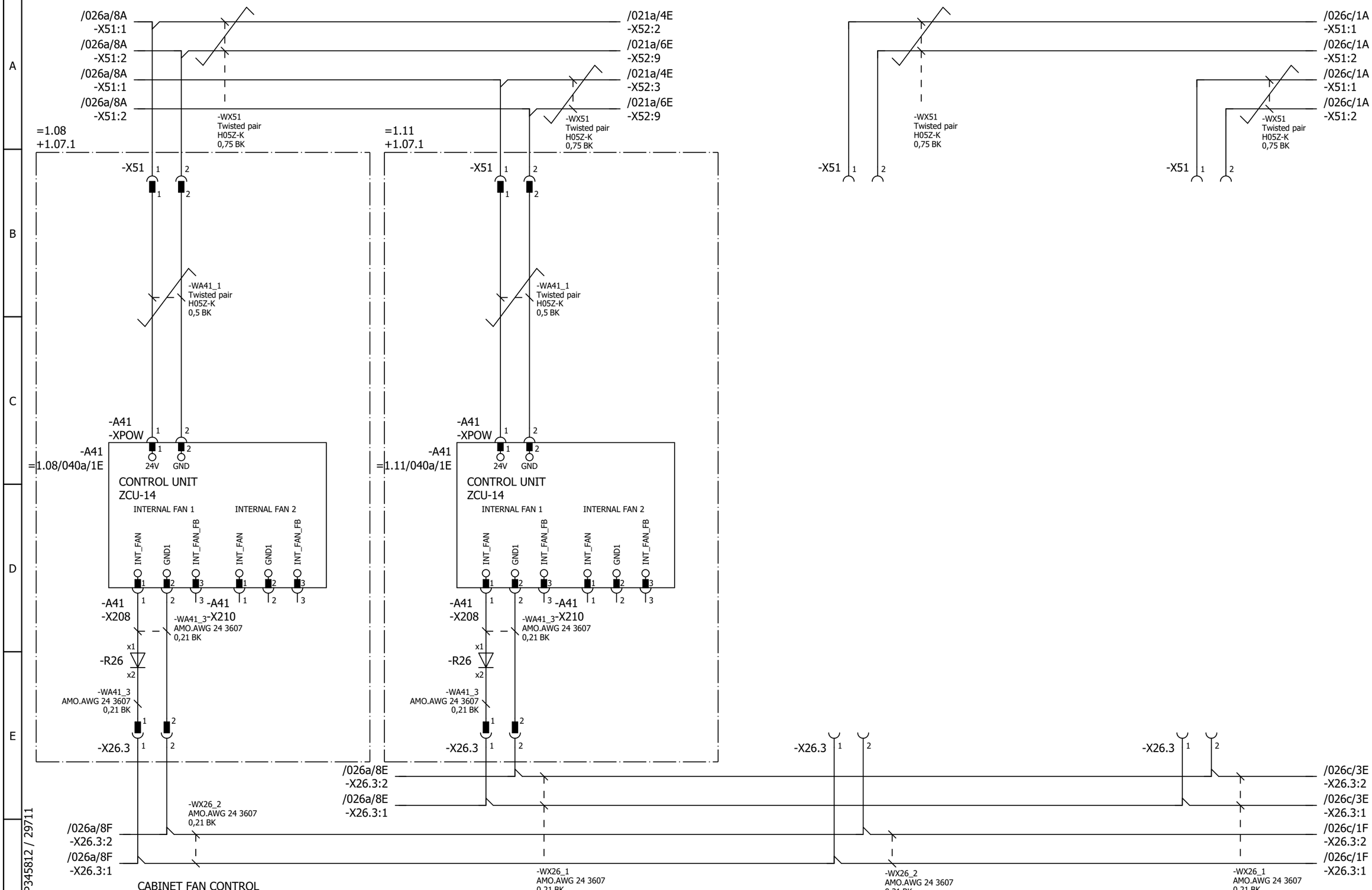

Cust. Doc. No.	Prep. Sky-Xin Zhang 02.08.2023	Title CABINET FAN CONTROL ZCU UPS, 24V FSO, FEA	Circuit diagram EFS2 / Item Des.
Cust. Ref. No.	App.	INV1.07	SAP Doc. No. / = 1.07
Customer WMMP	Project Zhaka Jack-up Lift System	ACS880-107-0078A-3	EPLAN Doc. No. 3ABDC230674 - 1.07 / + 1.07.1
	Zhaka Jack-up Lift System-1	400V	ABB Ref. No. / Rev. .1 / Sheet 026b
			Resp. Dept. / Cont. 026c

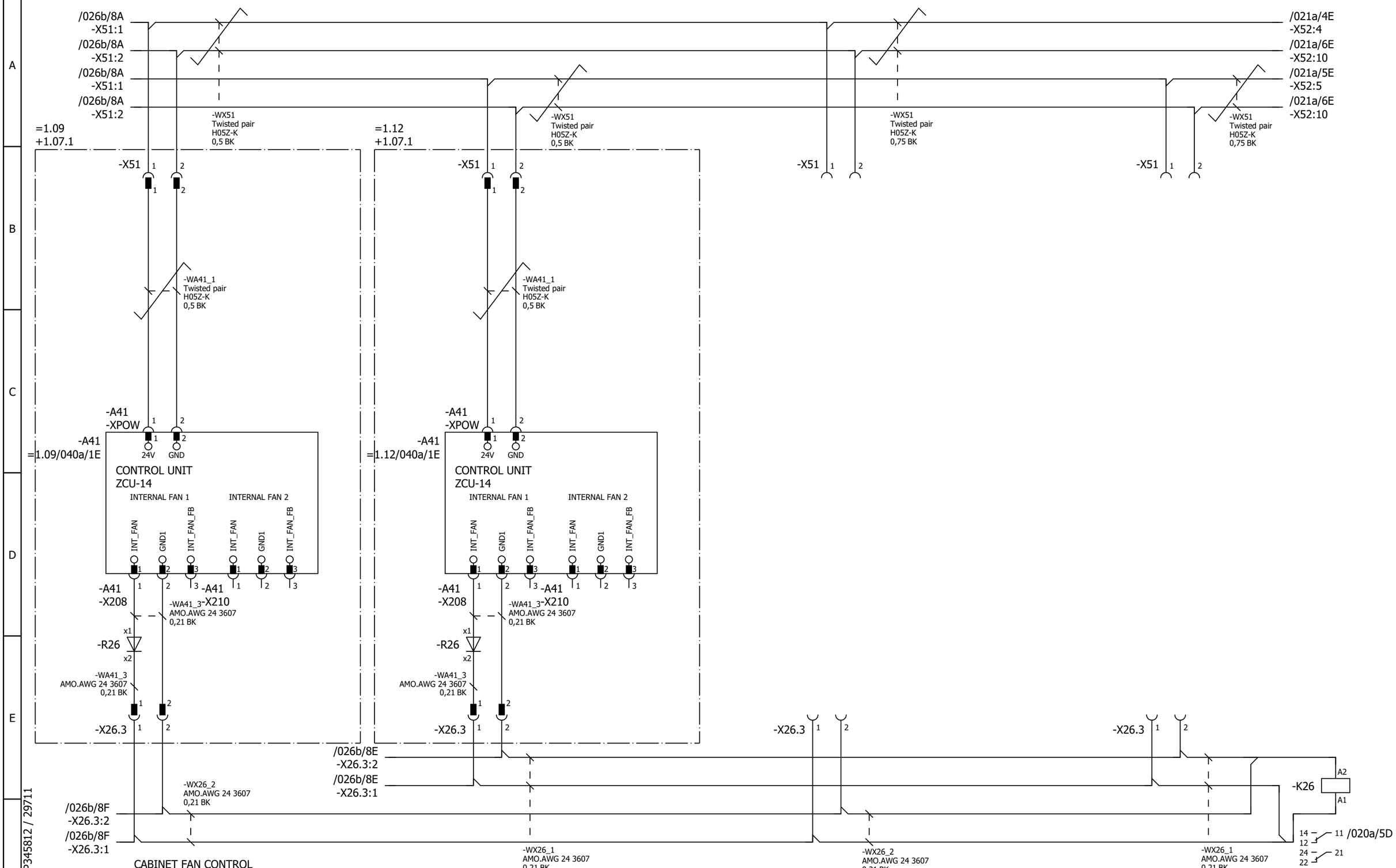

Cust. Doc. No.	Prep. Sky-Xin Zhang 02.08.2023	Title CABINET FAN CONTROL ZCU UPS, 24V FSO, FEA	Circuit diagram EFS2
Cust. Ref. No.	App.	INV1.07	SAP Doc. No.
Customer WMMP	Project Zhaka Jack-up Lift System	ACS880-107-0078A-3	EPLAN Doc. No. 3ABDC230674 - 1.07
	Zhaka Jack-up Lift System-1	400V	ABB Ref. No.
			Resp. Dept.

Item Des. = 1.07 + 1.07.1

Rev. .1 Sheet 026c

Cont. 040a

*) GEN.H05Z-K BK 1,0

Control and status signals	Terminal	Pin
E-STOP FEEDBACK 1 - ESTOP ACTIVE	-XRO1	12
RUNNING 1 - RUNNING	-XRO2	22
FAULT (-1) 1 - NO FAULT	-XRO3	32

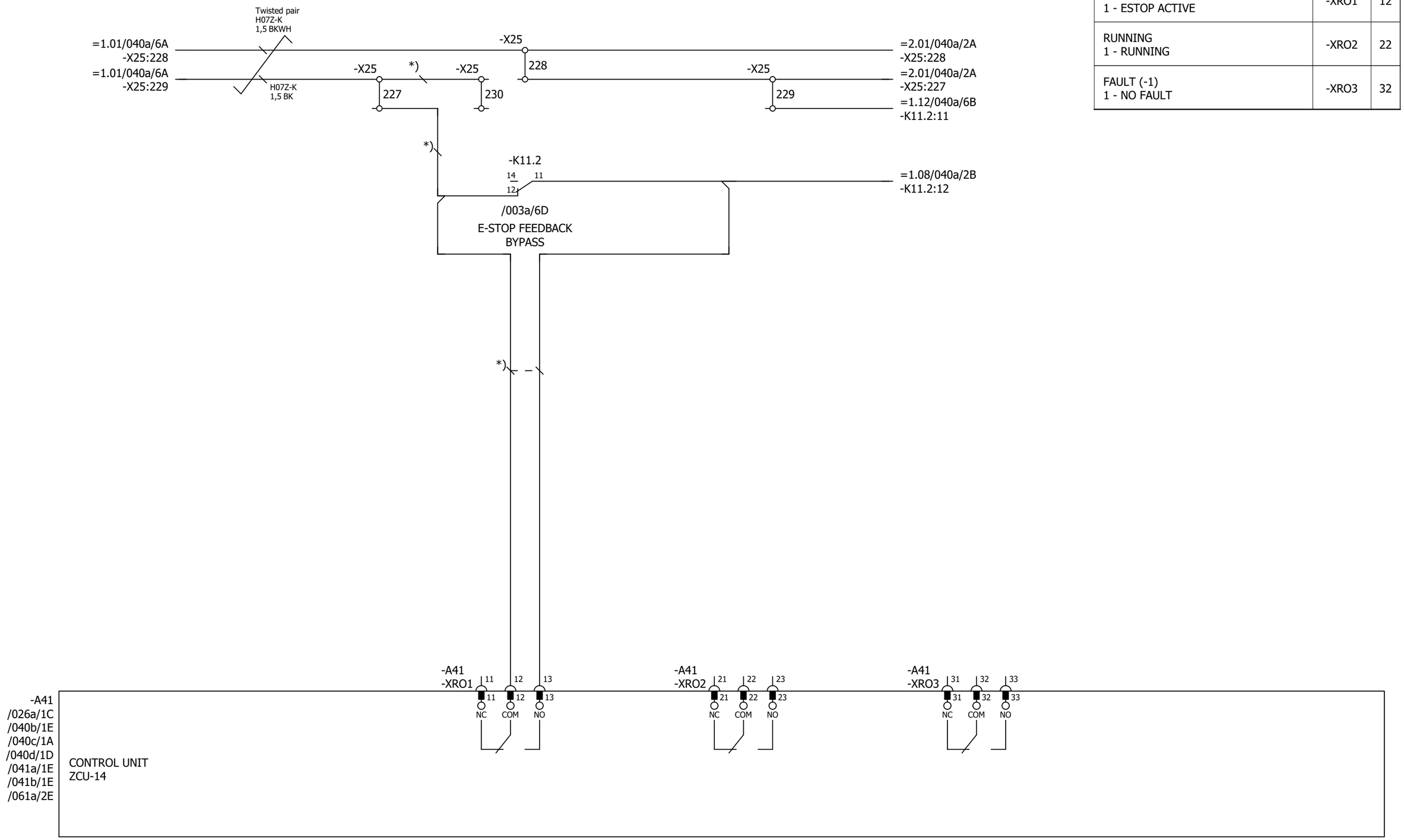

Cust. Doc. No.	Prep. Sky-Xin Zhang 02.08.2023	Title CONTROL BOARD INV1.07 ACS880-107-0078A-3 400V	Circuit diagram EFS2
Cust. Ref. No.	App.		SAP Doc. No.
Customer WMMP	Project Zhaka Jack-up Lift System Zhaka Jack-up Lift System-1		EPLAN Doc. No. 3ABDC230674 - 1.07
			ABB Ref. No.
			Resp. Dept.

Item Des.
= 1.07
+ 1.07.1

Rev. .1 Sheet 040a
Cont. 040b

Control and status signals	Terminal	Pin
DIGITAL INTERLOCK	-XD24	1
START/STOP 1 - START	-XDI	1
FORWARD/REVERSE 1 - REVERSE	-XDI	2
RESET	-XDI	3
EMERGENCY STOP 0 - ACTIVE	-XDI	4
NOT SPECIFIED	-XDI	5
DI6 NOT IN USE	-XDI	6
OUTPUT: READY	-XDIO	1
OUTPUT: RUNNING	-XDIO	2

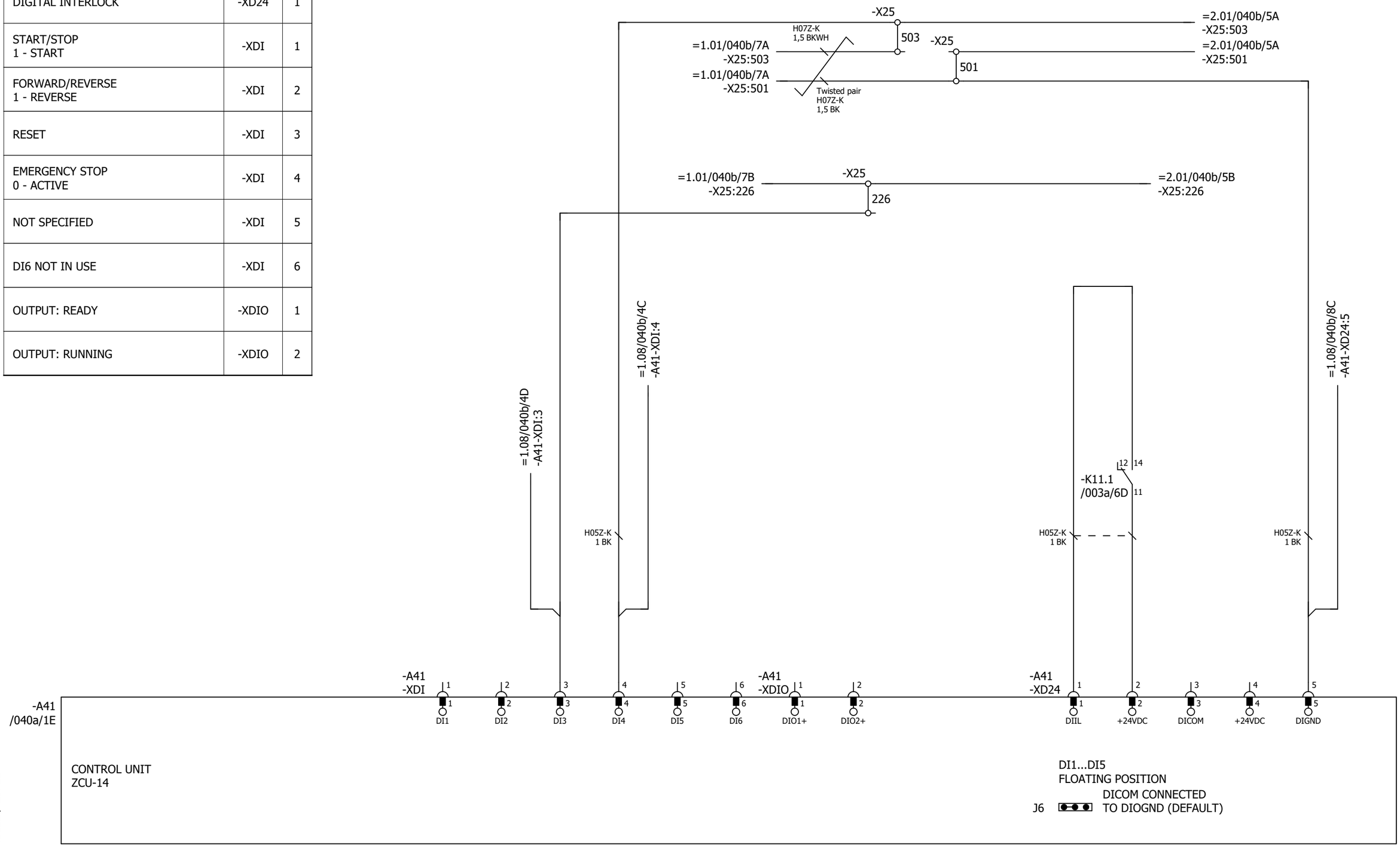

P345812 / 29711

Cust. Doc. No.	Prep. Sky-Xin Zhang 02.08.2023	Title CONTROL BOARD INV1.07 ACS880-107-0078A-3 400V	Circuit diagram EFS2	Item Des.	
Cust. Ref. No.	App.		SAP Doc. No.	= 1.07 + 1.07.1	
Customer WMMP	Project Zhaka Jack-up Lift System Zhaka Jack-up Lift System-1	ABB	EPLAN Doc. No. 3ABDC230674 - 1.07		
			ABB Ref. No.	Rev. .1	Sheet 040b
			Resp. Dept.	Cont.	040c

Control and status signals	Terminal	Pin
MOTOR TEMP. MONITORING 0(2)…10V	-XAI	4
AI2 NOT SPECIFIED BY DEFAULT NOT IN USE 0(4)…20mA	-XAI	6
CURR SOU MOT TEMP MONIT 0(4)...20mA	-XAO	1
CURRENT 0(4)…20mA ↔ 0(4)…MOTOR CURRENT	-XAO	3

P345812 / 29711

Cust. Doc. No.	Prep. Sky-Xin Zhang 02.08.2023	Title CONTROL BOARD INV1.07 ACS880-107-0078A-3 400V	Circuit diagram EFS2
Cust. Ref. No.	App.		SAP Doc. No.
Customer WMMP	Project Zhaka Jack-up Lift System Zhaka Jack-up Lift System-1		EPLAN Doc. No. 3ABDC230674 - 1.07
			ABB Ref. No.
			Resp. Dept.

Item Des.
= 1.07
+ 1.07.1

Rev. .1 Sheet 040c
Cont. 040d

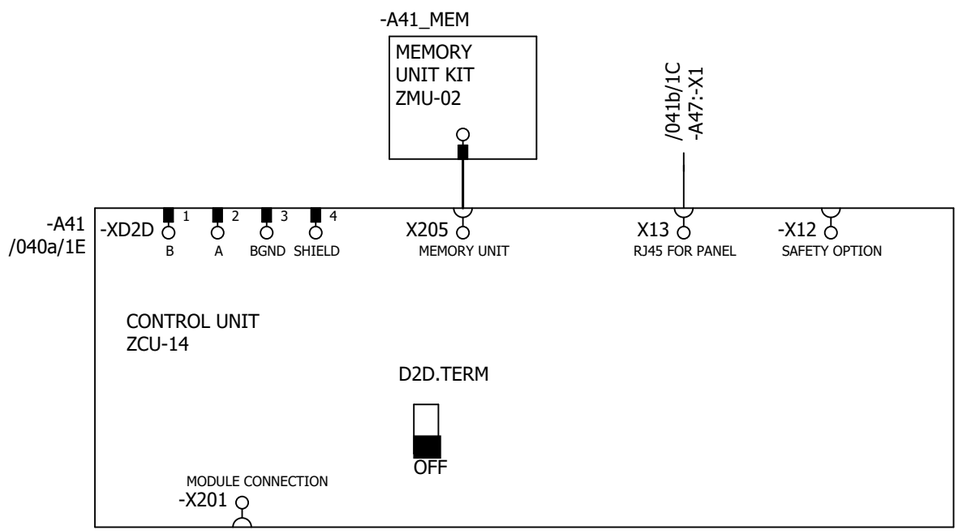

P345812 / 29711

Cust. Doc. No.	Prep. Sky-Xin Zhang 02.08.2023	Title CONTROL BOARD INV1.07 ACS880-107-0078A-3 400V	Circuit diagram EFS2
Cust. Ref. No.	App.		SAP Doc. No.
Customer WMMP	Project Zhaka Jack-up Lift System Zhaka Jack-up Lift System-1		EPLAN Doc. No. 3ABDC230674 - 1.07
			ABB Ref. No.
			Resp. Dept.

Item Des.
= 1.07
+ 1.07.1

Rev. .1 Sheet 040d
Cont. 041a

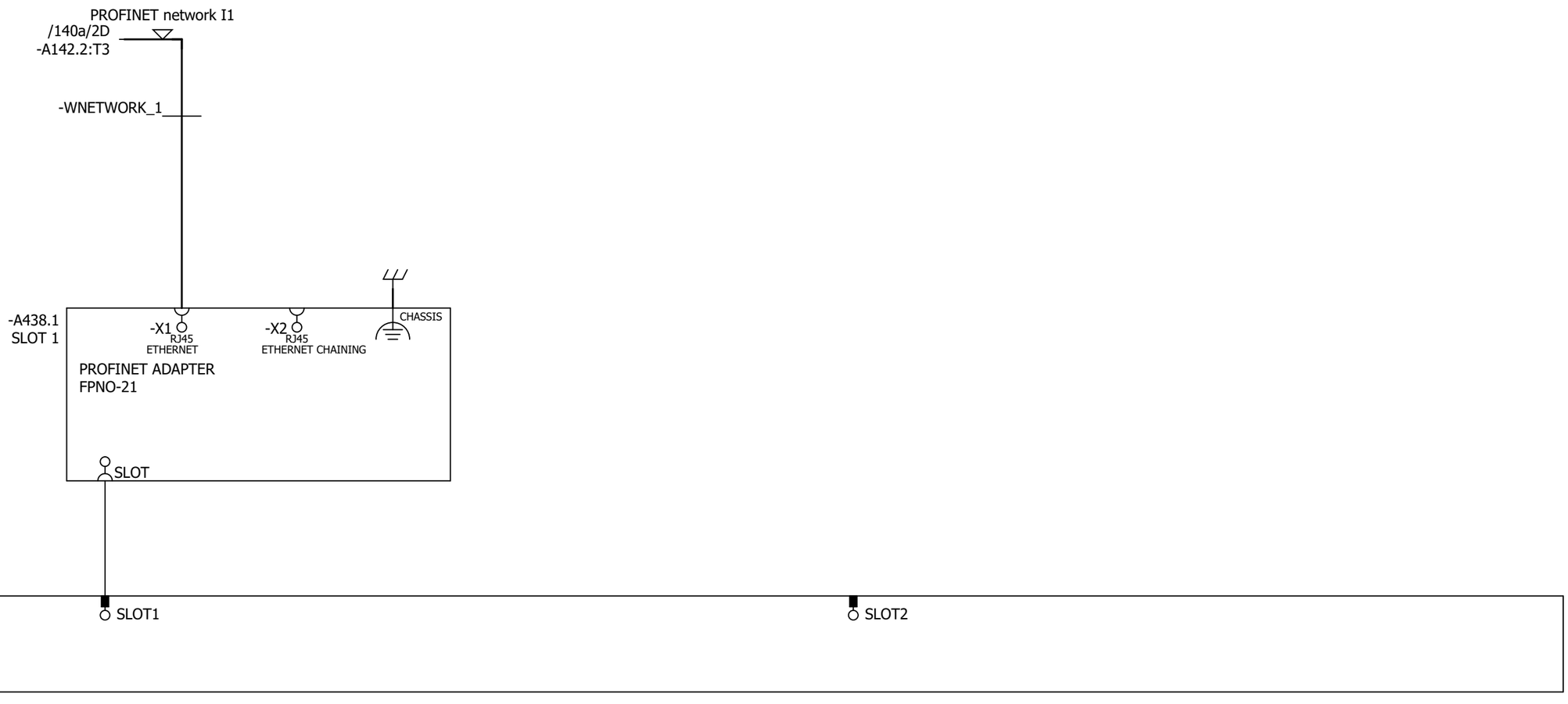

P345812 / 29711

Cust. Doc. No.	Prep. Sky-Xin Zhang 02.08.2023	Title OPTION CARDS INV1.07 ACS880-107-0078A-3 400V	Circuit diagram EFS2
Cust. Ref. No.	App.		SAP Doc. No.
Customer WMMP	Project Zhaka Jack-up Lift System Zhaka Jack-up Lift System-1		EPLAN Doc. No. 3ABDC230674 - 1.07
			ABB Ref. No.
			Resp. Dept.

Item Des.
= 1.07
+ 1.07.1

Rev. .1 Sheet 041a
Cont. 041b

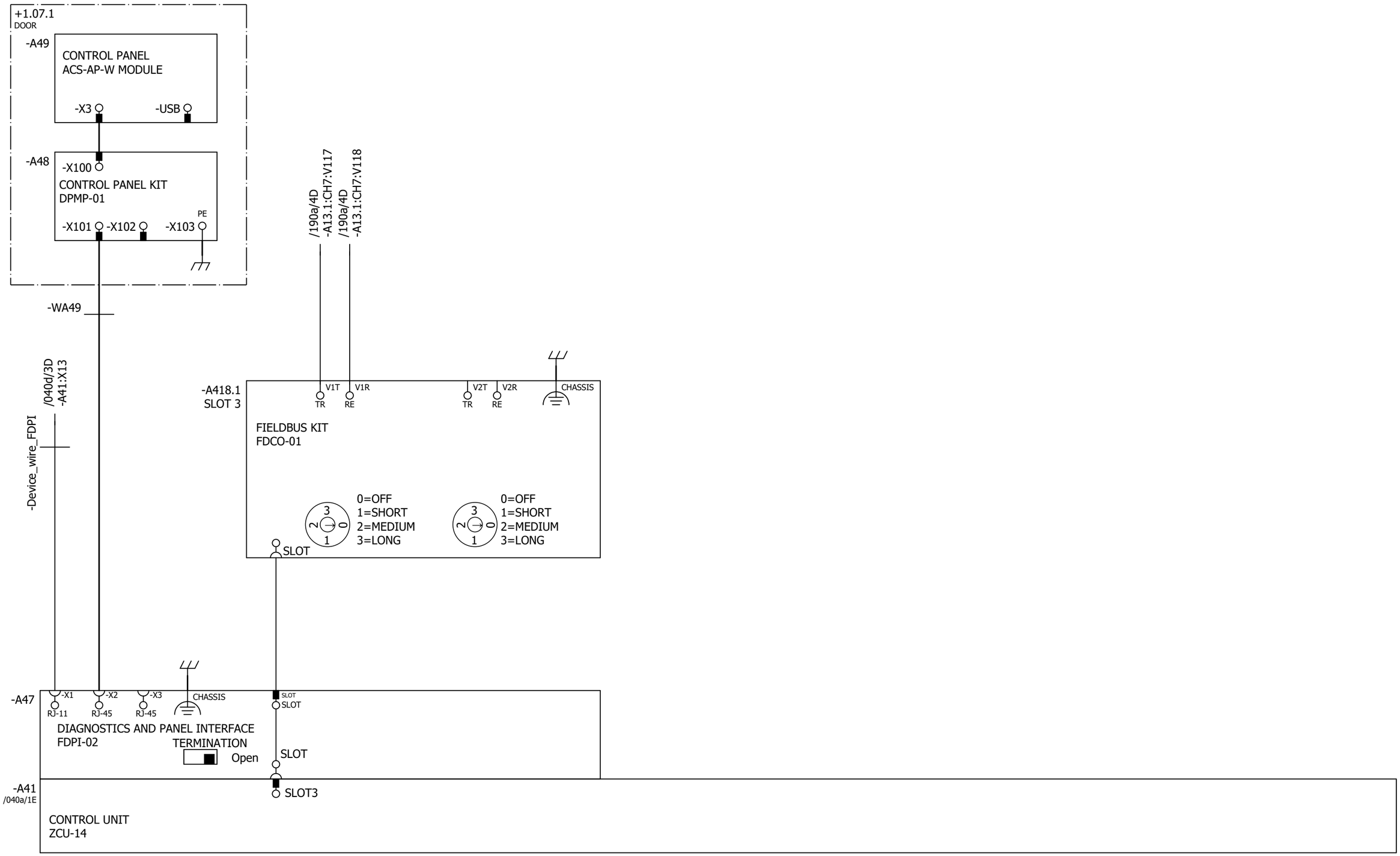

Cust. Doc. No.	Prep. Sky-Xin Zhang 02.08.2023	Title OPTION CARDS	Circuit diagram EFS2	Item Des.
Cust. Ref. No.	App.	INV1.07	SAP Doc. No.	= 1.07
Customer WMMP	Project Zhaka Jack-up Lift System	ACS880-107-0078A-3	EPLAN Doc. No. 3ABDC230674 - 1.07	+ 1.07.1
	Zhaka Jack-up Lift System-1	400V	ABB Ref. No.	Rev. .1 Sheet 041b
			Resp. Dept.	Cont. 061a

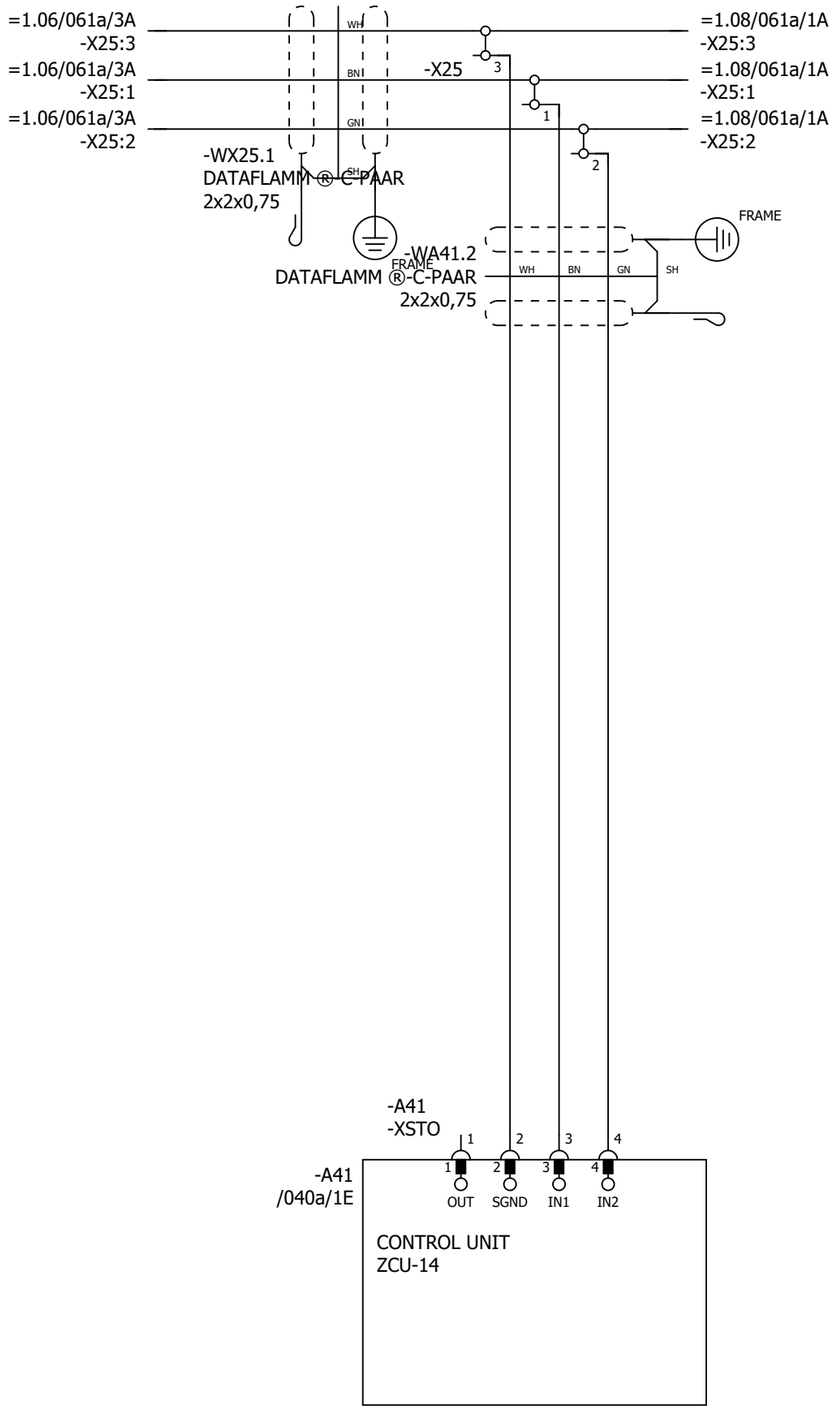

P345812 / 29711

SAFETY CIRCUIT
MACRO REVISION 6
RULES CONVERTED 19.7.2023

Cust. Doc. No.	Prep. Sky-Xin Zhang 02.08.2023	Title SAFETY CIRCUIT INV1.07 ACS880-107-0078A-3 400V	Circuit diagram EFS2
Cust. Ref. No.	App.		SAP Doc. No.
Customer WMMP	Project Zhaka Jack-up Lift System Zhaka Jack-up Lift System-1		EPLAN Doc. No. 3ABDC230674 - 1.07
			ABB Ref. No.
			Resp. Dept.

Item Des.
= 1.07
+ 1.07.1

Rev. .1 Sheet 061a
Cont. 095a

CABINET
HEATING

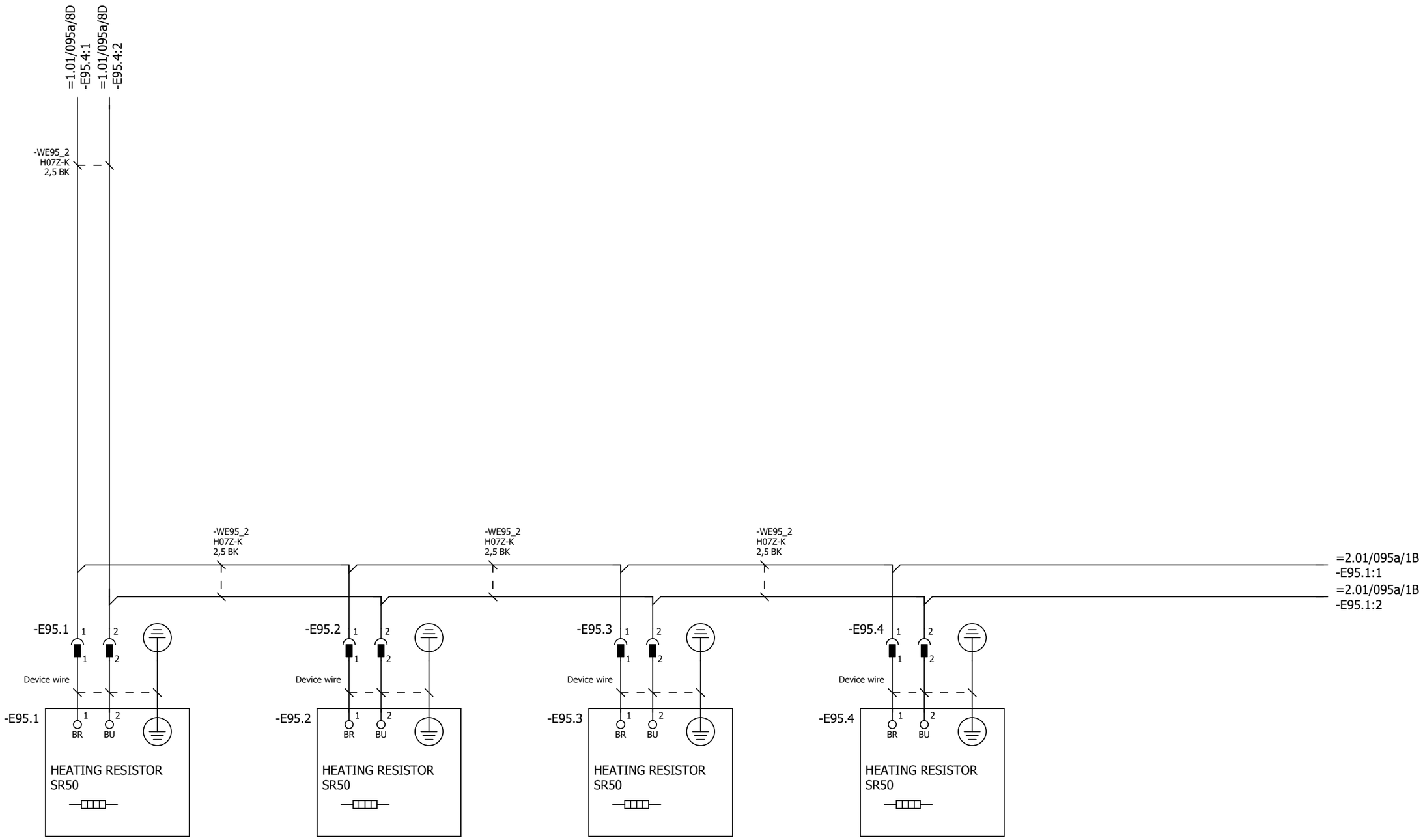

P345812 / 29711

Cust. Doc. No.	Prep. Sky-Xin Zhang 02.08.2023	Title CABINET HEATING	Circuit diagram EFS2	Item Des.	
Cust. Ref. No.	App.	INV1.07	SAP Doc. No.	= 1.07	
Customer WMMP	Project Zhaka Jack-up Lift System	ACS880-107-0078A-3	EPLAN Doc. No. 3ABDC230674 - 1.07	+ 1.07.1	
	Zhaka Jack-up Lift System-1	400V	ABB Ref. No.	Rev. .1	Sheet 095a
			Resp. Dept.	Cont.	140a

SWITCH FOR:
PROFINET network I2

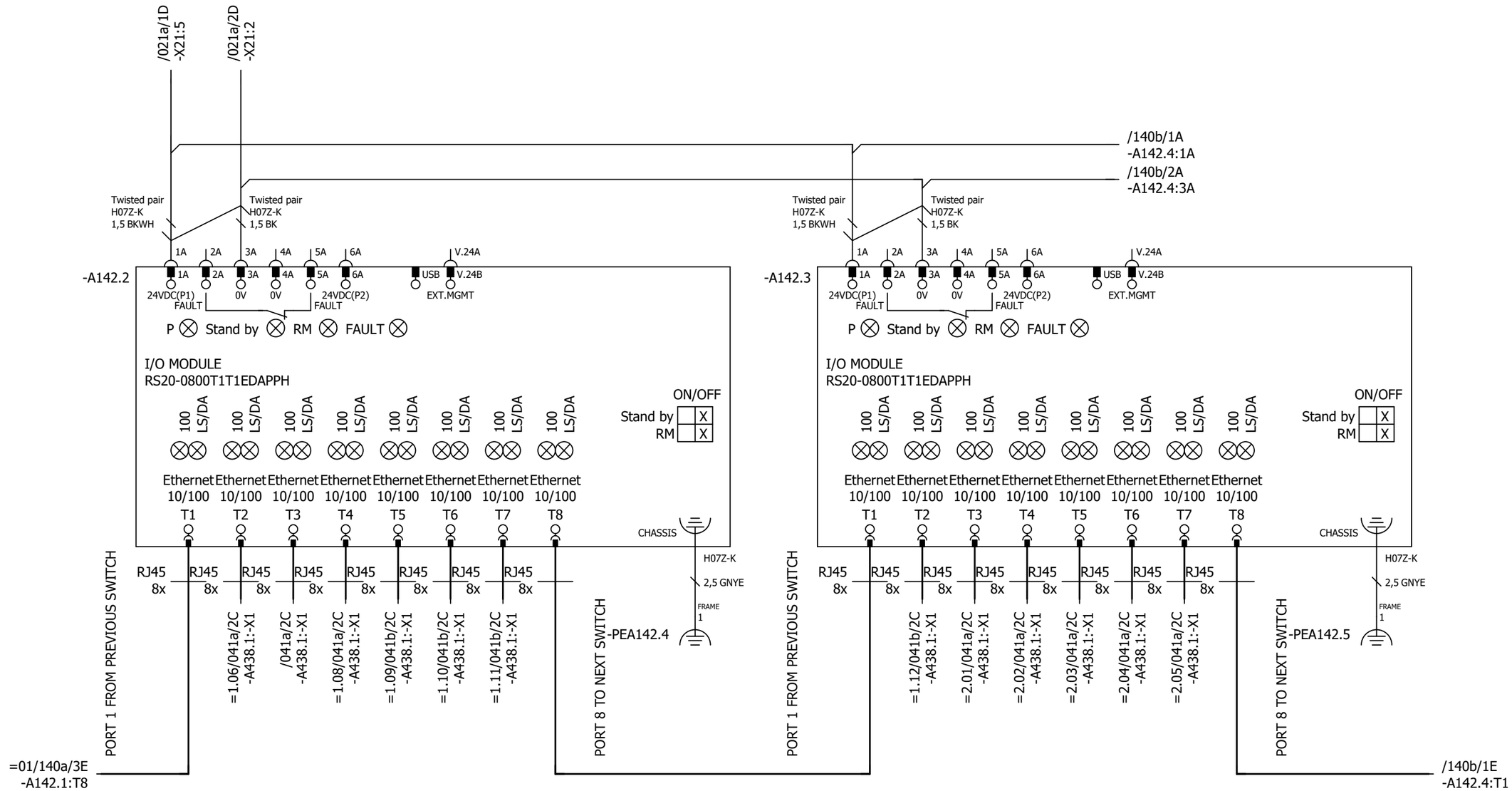

IF SWITCH IS NOT ALLOCATED TO FIRST UNIT IN NETWORK,
CHAIN AND RING TOPOLOGIES ARE NOT GENERATED OPTIMALLY
FROM WIRING PERSPECTIVE. PLEASE CHECK CONNECTIONS.

GENERATED WIRING ORDER, IF SWITCH IS ALLOCATED TO LAST UNIT IN NETWORK:
1) UNIT WITH SWITCH
2) FIRST UNIT IN NETWORK
3) SECOND UNIT IN NETWORK
....
n) UNIT BEFORE SWITCH

NOTE!
INSTALL GREEN PROFINET CABLES IN PROFINET/PROFIsafe NETWORK

P345812 / 29711

Cust. Doc. No.	Prep. Sky-Xin Zhang 02.08.2023	Title OPTION CARDS	Circuit diagram EFS2
Cust. Ref. No.	App.	INV1.07	SAP Doc. No.
Customer WMMP	Project Zhaka Jack-up Lift System	ACS880-107-0078A-3	EPLAN Doc. No. 3ABDC230674 - 1.07
	Zhaka Jack-up Lift System-1	400V	ABB Ref. No.
			Resp. Dept.

Item Des. = 1.07 + 1.07.2
Rev. .1 Sheet 140a
Cont. 140b

SWITCH FOR:
PROFINET network I2

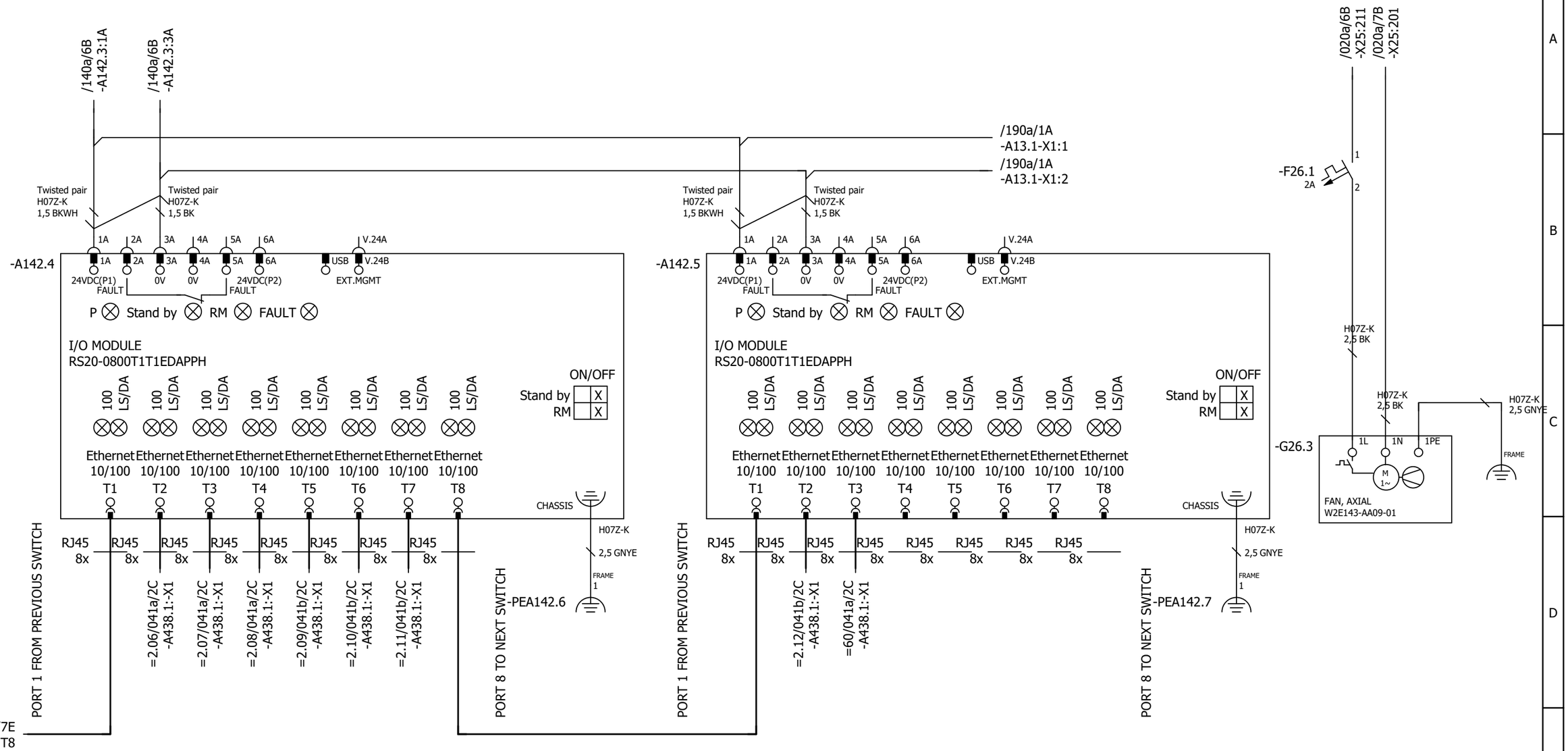

IF SWITCH IS NOT ALLOCATED TO FIRST UNIT IN NETWORK,
CHAIN AND RING TOPOLOGIES ARE NOT GENERATED OPTIMALLY
FROM WIRING PERSPECTIVE. PLEASE CHECK CONNECTIONS.

GENERATED WIRING ORDER, IF SWITCH IS ALLOCATED TO LAST UNIT IN NETWORK:
1) UNIT WITH SWITCH
2) FIRST UNIT IN NETWORK
3) SECOND UNIT IN NETWORK
....
n) UNIT BEFORE SWITCH

NOTE!
INSTALL GREEN PROFINET CABLES IN PROFINET/PROFIsafe NETWORK

P345812 / 29711

Cust. Doc. No.	Prep. Sky-Xin Zhang 02.08.2023	Title OPTION CARDS	Circuit diagram EFS2	Item Des.	
Cust. Ref. No.	App.	INV1.07	SAP Doc. No.	= 1.07	
Customer WMMP	Project Zhaka Jack-up Lift System	ACS880-107-0078A-3	EPLAN Doc. No. 3ABDC230674 - 1.07	+ 1.07.2	
	Zhaka Jack-up Lift System-1	400V	ABB Ref. No.	Rev. .1	Sheet 140b
			Resp. Dept.	Cont.	190a

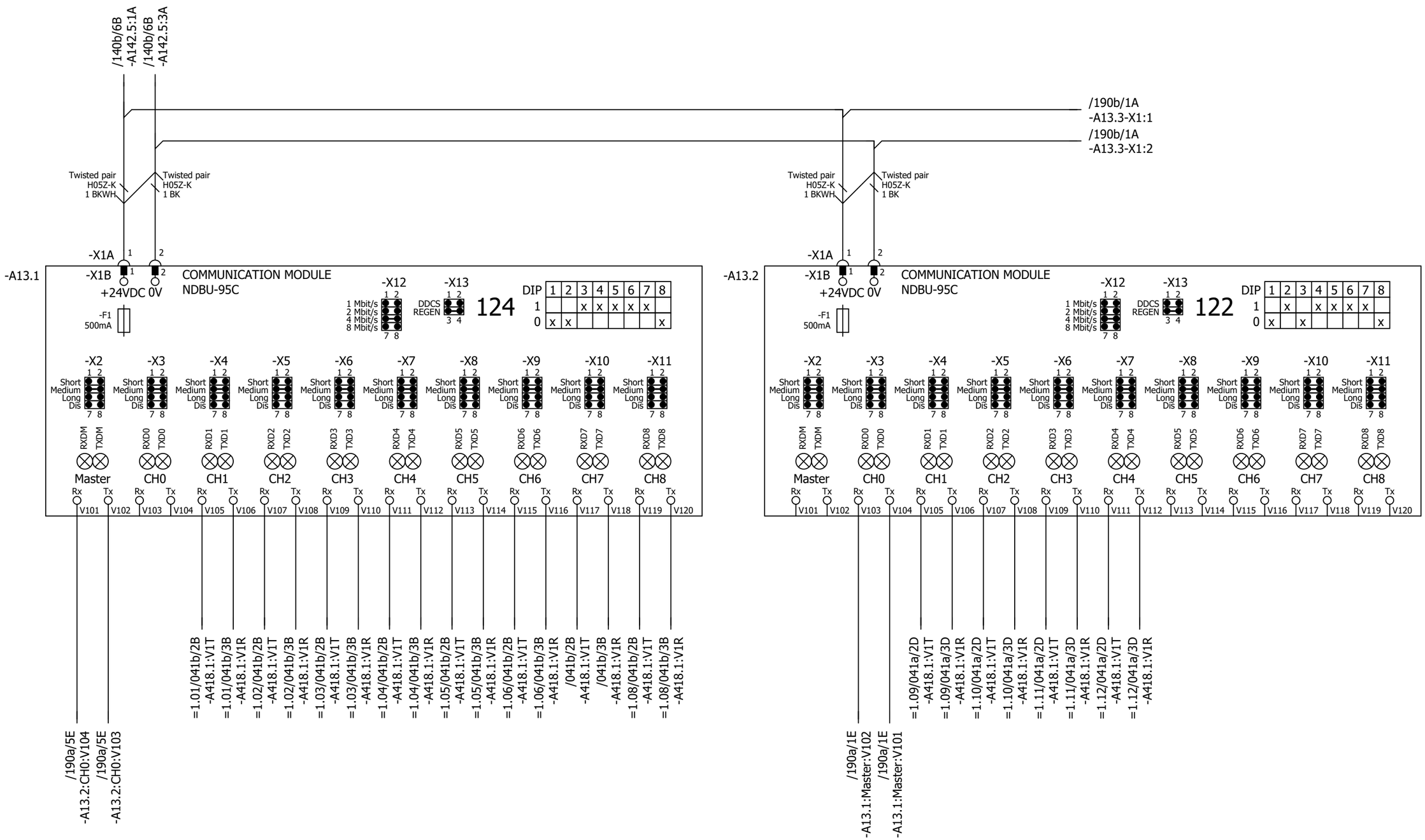

P345812 / 29711

Cust. Doc. No.	Prep. Sky-Xin Zhang 02.08.2023	Title DDCS BRANCHING UNIT	Circuit diagram EFS2
Cust. Ref. No.	App.	INV1.07	SAP Doc. No.
Customer WMMP	Project Zhaka Jack-up Lift System	ACS880-107-0078A-3	EPLAN Doc. No. 3ABDC230674 - 1.07
	Zhaka Jack-up Lift System-1	400V	ABB Ref. No.
			Resp. Dept.

Item Des. = 1.07 + 1.07.2

Rev. .1 Sheet 190a

Cont. 190b

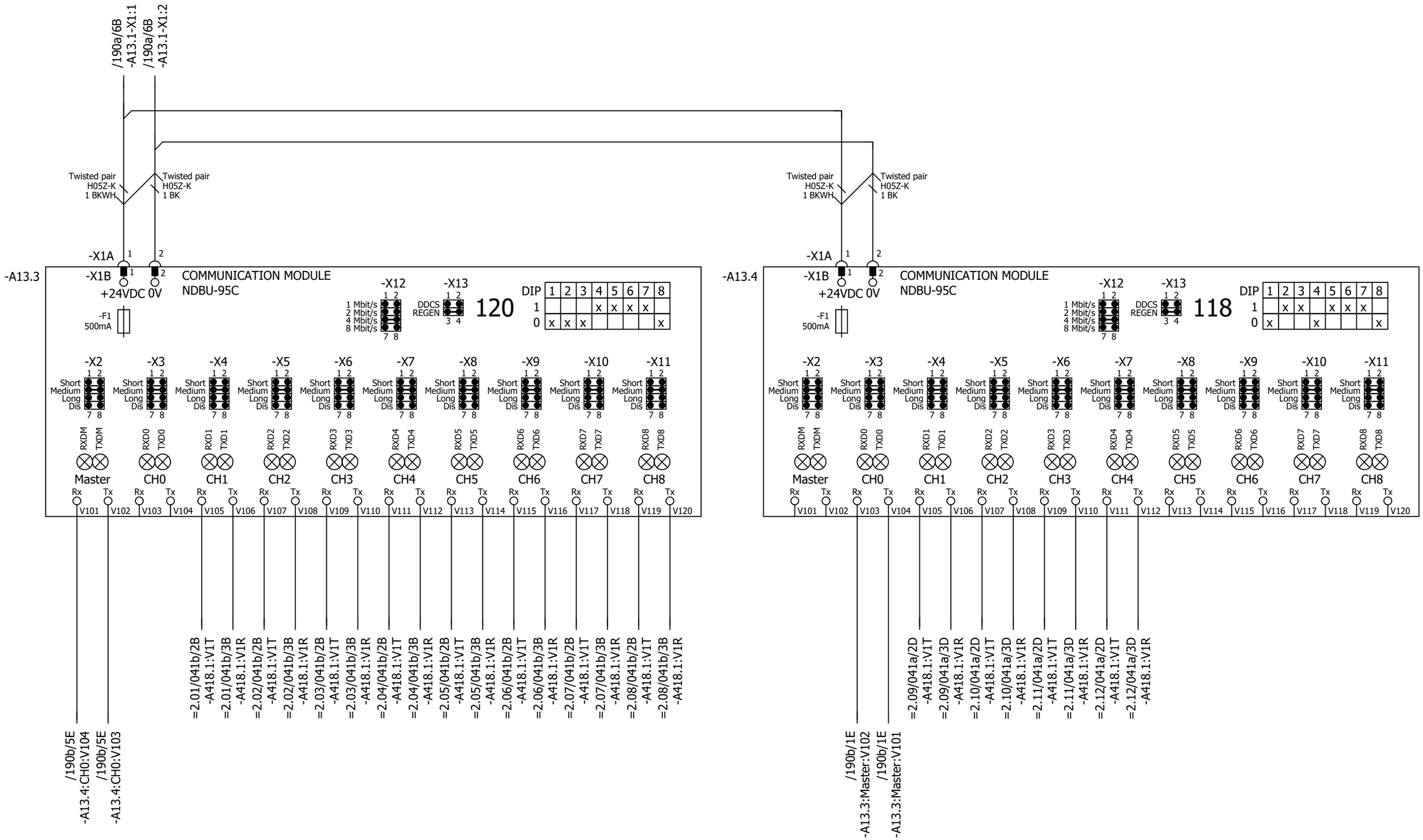

Cust. Doc. No.	Prep. Sky-Xin Zhang 02.08.2023	Title DDCS BRANCHING UNIT	Circuit diagram EFS2
Cust. Ref. No.	App.	INV1.07	SAP Doc. No.
Customer WMMP	Project Zhaka Jack-up Lift System	ACS880-107-0078A-3	EPLAN Doc. No. 3ABDC230674 - 1.07
	Zhaka Jack-up Lift System-1	400V	ABB Ref. No.
			Resp. Dept.

Item Des. = 1.07 + 1.07.2

Rev. .1 Sheet 190b

Cont. &MPC/Part list_1

Part list: 3ABDC230674DU01007

Item	Sort String	Qty.Str	Unit	Component Number	Description and text	Technical data
0010		1.000	ST		ACS880-107-0078A-3+A012+B053+C121+C132+	
0020		1.000	ST		_C206+E210+F272+F287+F288+G300+G307+G315	
0030		1.000	ST		_+G320+G330+G344+H352+H367+J400+K492+L50	
0040		1.000	ST		_3+P913+Q964	
0050		1.000	ST		=1.07	
0060		1.000	ST		+1.07.1,INU3	
0070		1.000	ST		Powerconversionequipment	
0080	-A41_MEM	1.000	PC	3AXD50000006010	MEMORY UNIT KIT ZMU-02	
0090	-T11	1.000	PC	3AUA0000120009-M	ACS880-104-0078A-3+P922	+P922
0100	SCREW	1.000	PC	3AFE68681481	SCREW K30X10 TORX	PT WN1452 ZN
0110	SOFTWARE	1.000	PC	3AUA0000153462	SOFTWARE PRIMARY CONTROL PROGRA	AINF6 FOR ZCU-12/14
0120		1.000	ST		R4imoduleDCfuse	
0130	-F11.1-2	2.000	PC	3AXD50000000219	FUSE FR27UQ69V160T/160A	6.921 CP URQ 27X60MM FERRULE;AR
0140		1.000	ST		R3i-R4imoduleDCfusebase	
0150	(-F11.1-2)	2.000	PC	3AUA0000089227	FUSE HOLDER FUSE BASE US271MI 150A	FUSE BASE US271MI 150A 800V
0160		1.000	ST		motorterminalR4i,coppercable	
0170	-X1	1.000	PC	3ABD50000000270	CONNECTOR PPAC-50	50 MM2;150 A;800V
0180	-X1	1.000	PC	3ABD50000000270	CONNECTOR PPAC-50	50 MM2;150 A;800V
0190	-X1	1.000	PC	3ABD50000000270	CONNECTOR PPAC-50	50 MM2;150 A;800V
0200		1.000	ST		24VDCsupplyZCU	
0210	-WA41_1	1.000	PC	3AXD50000005218	WIRE HARNESS 24VDC SUPPLY X51 ZCU V	HALOGEN FREE;X51_A51
0220		1.000	ST		Rooffancontrol	
0230	-WA41_3	1.000	PC	3AXD50000002688	WIRE HARNESS FAN CONTROL MAIN WIRE	HALOGEN FREE;X208_X26.3
0240		1.000	ST		Toprowmodulewireharness	
0250	-WT11	1.000	PC	3AXD50000002256	WIRE HARNESS R4I FUSE_MODULE V2	HALOGEN FREE;MAIN CIRCUIT WIRE SET
0260	-WX1	1.000	PC	3AXD50000002258	WIRE HARNESS R4I MODULE_OUTPUT TR V	HALOGEN FREE;MAIN CIRCUIT WIRE SET
0270		1.000	ST		Optionmodule	
0280	-A418.1	1.000	PC	3AUA0000107392	COMMUNIC. ADAPTER FDCO-01	
0290		1.000	ST		Controlpanel	
0300	-A47	1.000	PC	3AUA0000108650	FIELDBUS KIT FDPI-02	PANEL BUS ADAPTER
0310	-A48	1.000	PC	3AUA0000108878	CONTROL PANEL KIT DPMP-01	DPMP-01
0320	-A49	1.000	PC	3AXD50000025964	CONTROL PANEL ACS-AP-W MODULE	ASSISTANT PANEL WIRELESS CPU1
0330		1.000	ST		DCfusesupervision	

P345812 / 29711

Cust. Doc. No.	Prep.	Title PART LIST INV1.07 ACS880-107-0078A-3 400V	Item Des. = 1.07 +
Cust. Ref. No.	App.		SAP Doc. No.
Customer WMMP	Project Zhaka Jack-up Lift System Zhaka Jack-up Lift System-1		EPLAN Doc. No. 3ABDC230674 - 1.07
			ABB Ref. No. / Rev. / Sheet Part list_1
			Resp. Dept. / Cont. Part list_2

Part list: 3ABDC230674DU01007

Item	Sort String	Qty.Str	Unit	Component Number	Description and text	Technical data
0340	-K11.1-2	2.000	PC	3AXD50000021313	RELAY DEK_REL_G24/21	250 V;6 A;COIL 24VDC
0350	-WK11	1.000	PC	3AXD50000003220	WIRE HARNESS 6 MODULE 800MM CABINET	HALOGEN FREE;DC FUSE SUPERVISION
0360	-WK11	1.000	PC	3AXD50000003227	WIRE HARNESS 1ST MODULE SUPERV 800M	HALOGEN FREE;DC FUSE SUPERVISION
0370	-WK11	1.000	PC	3AXD50000003228	WIRE HARNESS 2ND MODULE SUPERV 800M	HALOGEN FREE;DC FUSE SUPERVISION
0380	-WK11	1.000	PC	3AXD50000003229	WIRE HARNESS 3RD MODULE SUPERV 800M	HALOGEN FREE;DC FUSE SUPERVISION
0390	-WK11	1.000	PC	3AXD50000003230	WIRE HARNESS 4TH MODULE SUPERV 800M	HALOGEN FREE;DC FUSE SUPERVISION
0400	-WK11	1.000	PC	3AXD50000003231	WIRE HARNESS 5TH MODULE SUPERV 800M	HALOGEN FREE;DC FUSE SUPERVISION
0410	-WK11	1.000	PC	3AXD50000003232	WIRE HARNESS 6TH MODULE SUPERV 800M	HALOGEN FREE;DC FUSE SUPERVISION
0420		1.000	ST		FieldBus	
0430	-A438.1	1.000	PC	3AXD50000192779	OPTION MODULE FPNO-21	PROFINET IO
0440		1.000	ST		Supplementtorelay	
0450	(-K11.1)	1.000	PC	3AXD50000021312	TERMINAL BLOCK ST EB2_DIK_RD 2716693	2POLE, 6,15 MM PITCH;FOR DEK RELAYS
0460		1.000	ST		CommonDCfuse	
0470	-F10.1-2	2.000	PC	3AXD50000000246	FUSE 170M4416	630 A;690 V;DIN1 FLUSH END;AR;200KA
0480	-F10.3-4	2.000	PC	3AXD50000000234	FUSE 170M4410	315 A;690 V;DIN1 FLUSH END;AR;200KA
0490		1.000	ST		Cabinetfan	
0500	-F26	1.000	PC	3AFE68264758	PROTECTION SWITCH S 201-K4	4A, 440VAC/60VDC
0510	-G26.1	1.000	PC	3AXD50000000592	FAN R3G225-RH17-23	230V;96W;50HZ;60HZ;0,77A;1080M3S CCC,UL
0520	-G26.2	1.000	PC	3AXD50000000592	FAN R3G225-RH17-23	230V;96W;50HZ;60HZ;0,77A;1080M3S CCC,UL
0530	-K26	1.000	PC	3AUA0000102191	RELAY RCL425024-SOCKET-DIODE	8 A;24 V;24VDC, 2C/O
0540	-X26.1	1.000	PC	3AXD50000000723	TERMINAL BLOCK AS X26 FAN SUPPLY PLUG	12,00 AWG;2,50 mm2;24,00 A;500,00 V
0550	(-X26.1)	1.000	PC	3AXD50000000724	TERMINAL BLOCK AS X26 FAN SUPPLY SOCKET	12,00 AWG;2,50 mm2;24,00 A;500,00 V
0560	-X26.2	1.000	PC	3AXD50000000723	TERMINAL BLOCK AS X26 FAN SUPPLY PLUG	12,00 AWG;2,50 mm2;24,00 A;500,00 V
0570	(-X26.2)	1.000	PC	3AXD50000000724	TERMINAL BLOCK AS X26 FAN SUPPLY SOCKET	12,00 AWG;2,50 mm2;24,00 A;500,00 V
0580		1.000	ST		Auxvoltagedistribution	
0590	-X22	1.000	PC	3AXD50000001632	TERMINAL BLOCK AS X22	12 AWG;2 mm2;24 A;800 V
0600	-X25	1.000	PC	3AXD50000001609	TERMINAL BLOCK AS X25 (1)	6 AWG;10 mm2;57 A;800 V
0610	-X25	1.000	PC	3ABD00609550	ASSEMBLY PLATE FOR X25 TERMINAL	acs880
0620		1.000	ST		EMSTOPterminalblock	
0630	-X25	1.000	PC	3AXD50000001610	TERMINAL BLOCK AS X25 (2)	12 AWG;2 mm2;24 A;500 V
0640		1.000	ST		STOterminalblock	
0650	-X25	1.000	PC	3AXD50000001631	TERMINAL BLOCK AS X60	12 AWG;2 mm2;24 A;500 V
0660		1.000	ST		24vDCdistributionwithUPS	

P345812 / 29711

Cust. Doc. No.	Prep.	Title PART LIST INV1.07 ACS880-107-0078A-3 400V	Item Des. = 1.07 +
Cust. Ref. No.	App.		SAP Doc. No.
Customer WMMP	Project Zhaka Jack-up Lift System Zhaka Jack-up Lift System-1		EPLAN Doc. No. 3ABDC230674 - 1.07
			ABB Ref. No. / Rev. / Sheet Part list_2
			Resp. Dept. / Cont. Part list_3

Part list: 3ABDC230674DU01007

Item	Sort String	Qty.Str	Unit	Component Number	Description and text	Technical data
0670	-F21	1.000	PC	3AFE68264766	PROTECTION SWITCH S 201-K6	S 201-K6
0680		1.000	ST		24VDCsupply	
0690	-WX51	1.000	PC	3AXD50000005214	WIRE HARNESS 24VDC SUPPLY 800MM V2	HALOGEN FREE;X52_X51
0700		1.000	ST		Cabinetrooffansupply	
0710	-WG26	1.000	PC	3AXD50000036922	WIRE HARNESS CABINET ROOF FAN SUPPL	R1I-R4I 800/1000MM
0720		1.000	ST		Cabinetrooffancontrol	
0730	-WX26_1	1.000	PC	3AXD50000005080	WIRE HARNESS 800MM CABINET LOWER RO	HALOGEN FREE;X26.3_X26.4
0740	-WX26_2	1.000	PC	3AXD50000005078	WIRE HARNESS 800MM CABINET UPPER RO	HALOGEN FREE;X26.3_K26
0750		1.000	ST		24VDCdistribution	
0760	-F52.1-5	5.000	PC	3AXD50000005465	FUSE MDL-7-R	7 A;250 V;¼" x 1¼";GLASS TUBE;TIME-DELAY
0770	-T22	1.000	PC	3ABD00010542	POWER SUPPLY NDR-120-24	24V 5A
0780	-X21	1.000	PC	3AXD50000001633	TERMINAL BLOCK AS X21	12 AWG;2 mm2;24 A;800 V
0790	-X52	1.000	PC	3AXD50000005221	TERMINAL BLOCK AS 24VDC X52 TERM BLOCK 5	10 AWG;4 mm2;10 A;500 V;fuse size 6,3x32
0800		1.000	ST		24vDCdistribution	
0810	-T51	1.000	PC	3ABD00010602	POWER SUPPLY NDR-240-24	24V 10A
0820	-T52	1.000	PC	3ABD00010602	POWER SUPPLY NDR-240-24	24V 10A
0830		1.000	ST		Cabinetheaters	
0840	-E95.1-4	4.000	PC	3AFE09827498	HEATING EQUIPMENT SR50	HEATER 50W/220V(110-270VACDC)
0850	(-E95.1-4)	4.000	PC	3AXD50000010133	ASSEMBLY PLATE HEATER	STEEL HDG 1,0;DEGREAS CLEAN
0860	(-E95.1-4)	1.000	PC	3AXD50000010509	ASSEMBLY DRAWING HEATER 50 AND 100W	
0870	X95.1A-4A	4.000	PC	3AXD50000007033	CONNECTOR SC 2,5/ 2	2,50 mm2;24 A;500 V;2-POS. MALE
0880	X95.1B-4B	4.000	PC	3AUA0000066694	CONNECTOR SSL2.5 3043815	LOCKING ELEMENTS FOR ST-COMBI CONNECTOR
0890		1.000	ST		Supplementforrelay	
0900	(-K11)	2.000	PC	3AXD50000021311	CONNECTOR EB 10-DIK RD 2716774	10POLE, 6,15 MM PITCH;FOR DEK RELAYS
0910	(-K11)	1.000	PC	3AXD50000021314	RELAY D-DEK_1,5_GN	end plate

P345812 / 29711

Cust. Doc. No.	Prep.	Title PART LIST INV1.07 ACS880-107-0078A-3 400V	Item Des. = 1.07 +
Cust. Ref. No.	App.		SAP Doc. No.
Customer WMMP	Project Zhaka Jack-up Lift System Zhaka Jack-up Lift System-1		EPLAN Doc. No. 3ABDC230674 - 1.07
			ABB Ref. No. / Rev. / Sheet Part list_3
			Resp. Dept. / Cont. &EMA/1

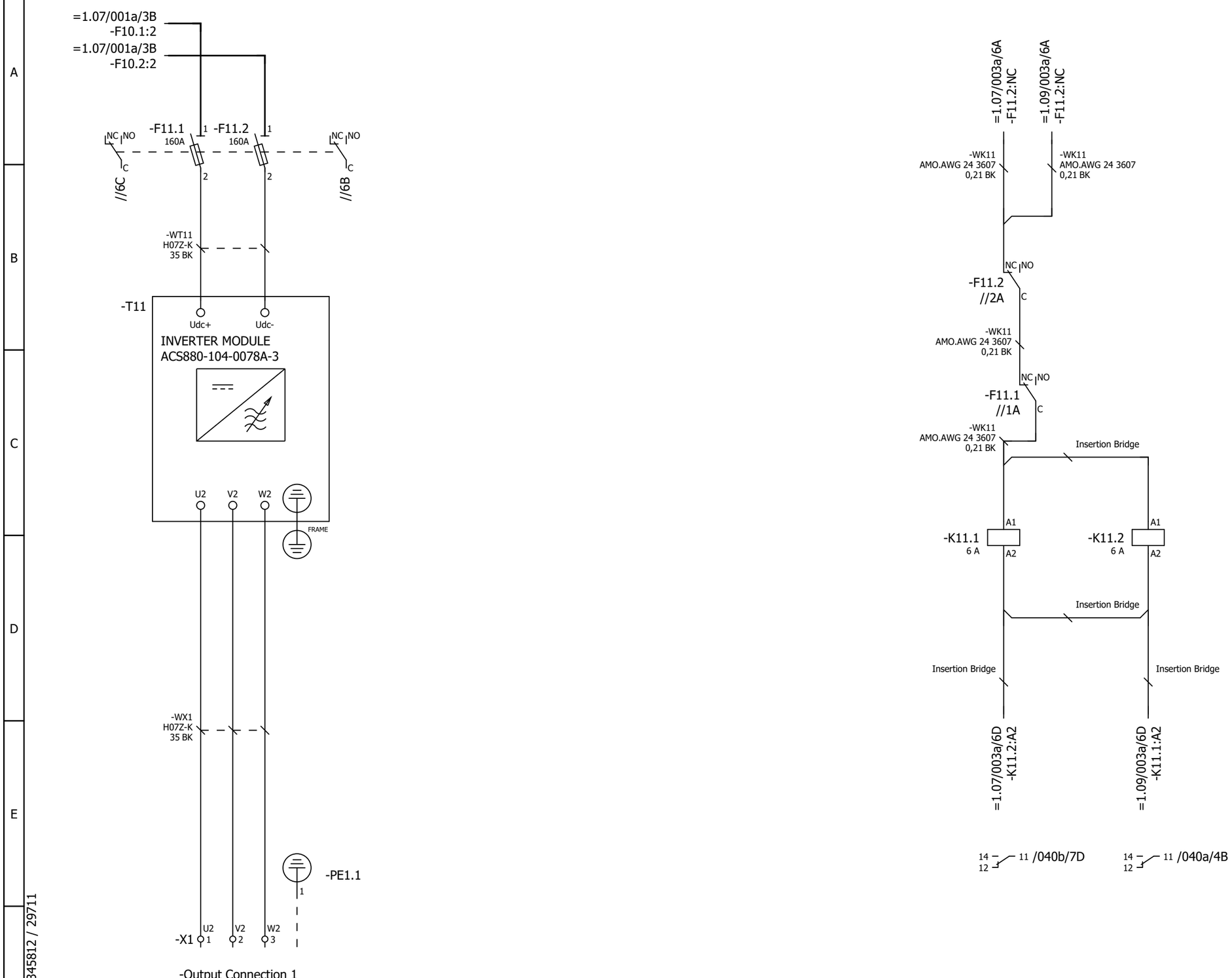

P345812 / 29711

Cust. Doc. No.	Prep. Sky-Xin Zhang 02.08.2023	Title MAIN CIRCUIT	Circuit diagram EFS2
Cust. Ref. No.	App.	INV1.08	SAP Doc. No.
Customer WMMP	Project Zhaka Jack-up Lift System	ACS880-107-0078A-3	EPLAN Doc. No. 3ABDC230674 - 1.08
	Zhaka Jack-up Lift System-1	400V	ABB Ref. No.
			Resp. Dept.

Item Des.
= 1.08
+ 1.07.1

Rev. .1 Sheet 003a
Cont. 040a

Control and status signals	Terminal	Pin
E-STOP FEEDBACK 1 - ESTOP ACTIVE	-XRO1	12
RUNNING 1 - RUNNING	-XRO2	22
FAULT (-1) 1 - NO FAULT	-XRO3	32

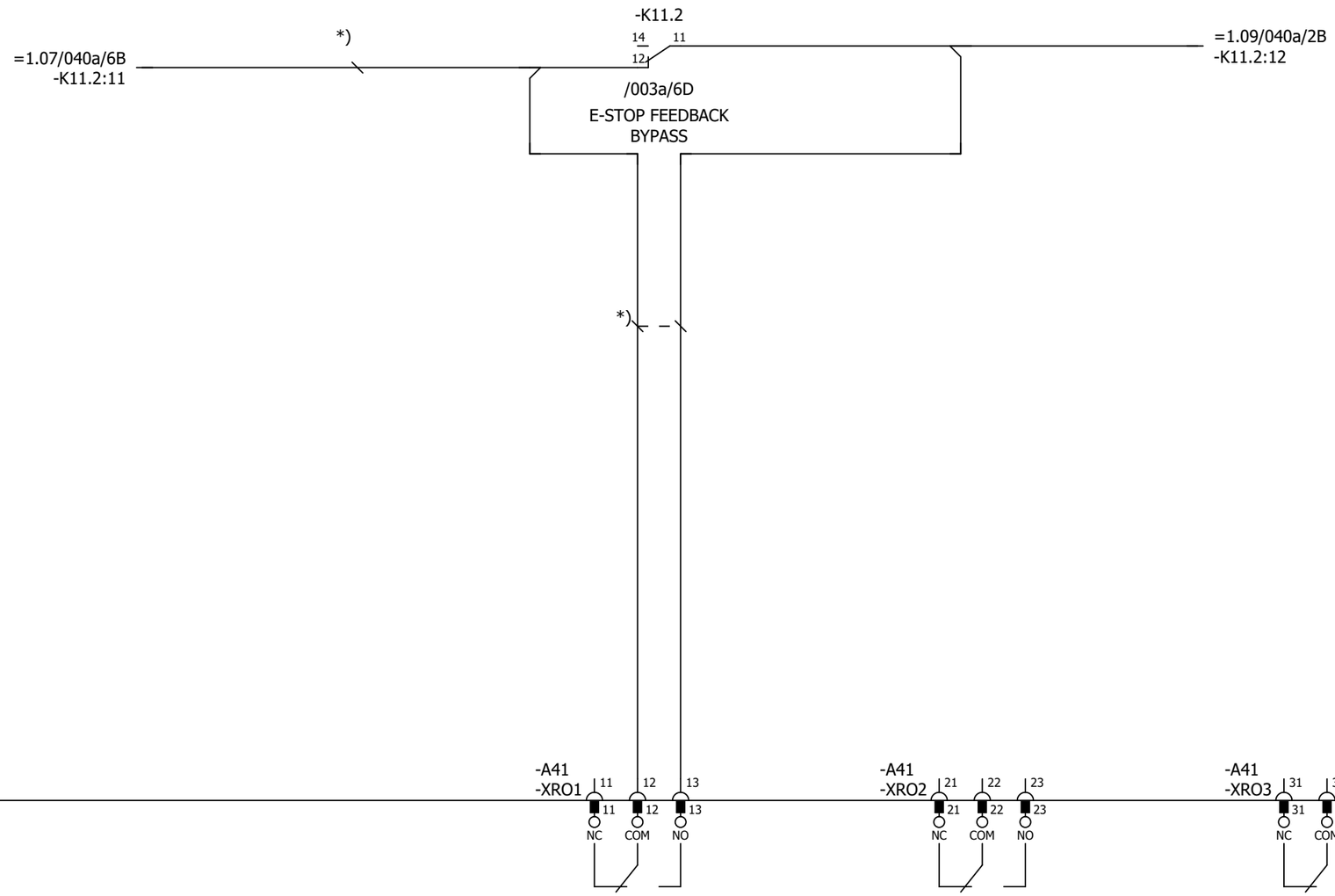

P345812 / 29711

Cust. Doc. No.	Prep. Sky-Xin Zhang 02.08.2023	Title CONTROL BOARD INV1.08 ACS880-107-0078A-3 400V	Circuit diagram EFS2
Cust. Ref. No.	App.		SAP Doc. No.
Customer WMMP	Project Zhaka Jack-up Lift System Zhaka Jack-up Lift System-1		EPLAN Doc. No. 3ABDC230674 - 1.08
			ABB Ref. No.
			Resp. Dept.

Item Des.
= 1.08
+ 1.07.1

Rev. .1 Sheet 040a
Cont. 040b

Control and status signals	Terminal	Pin
DIGITAL INTERLOCK	-XD24	1
START/STOP 1 - START	-XDI	1
FORWARD/REVERSE 1 - REVERSE	-XDI	2
RESET	-XDI	3
EMERGENCY STOP 0 - ACTIVE	-XDI	4
NOT SPECIFIED	-XDI	5
DI6 NOT IN USE	-XDI	6
OUTPUT: READY	-XDIO	1
OUTPUT: RUNNING	-XDIO	2

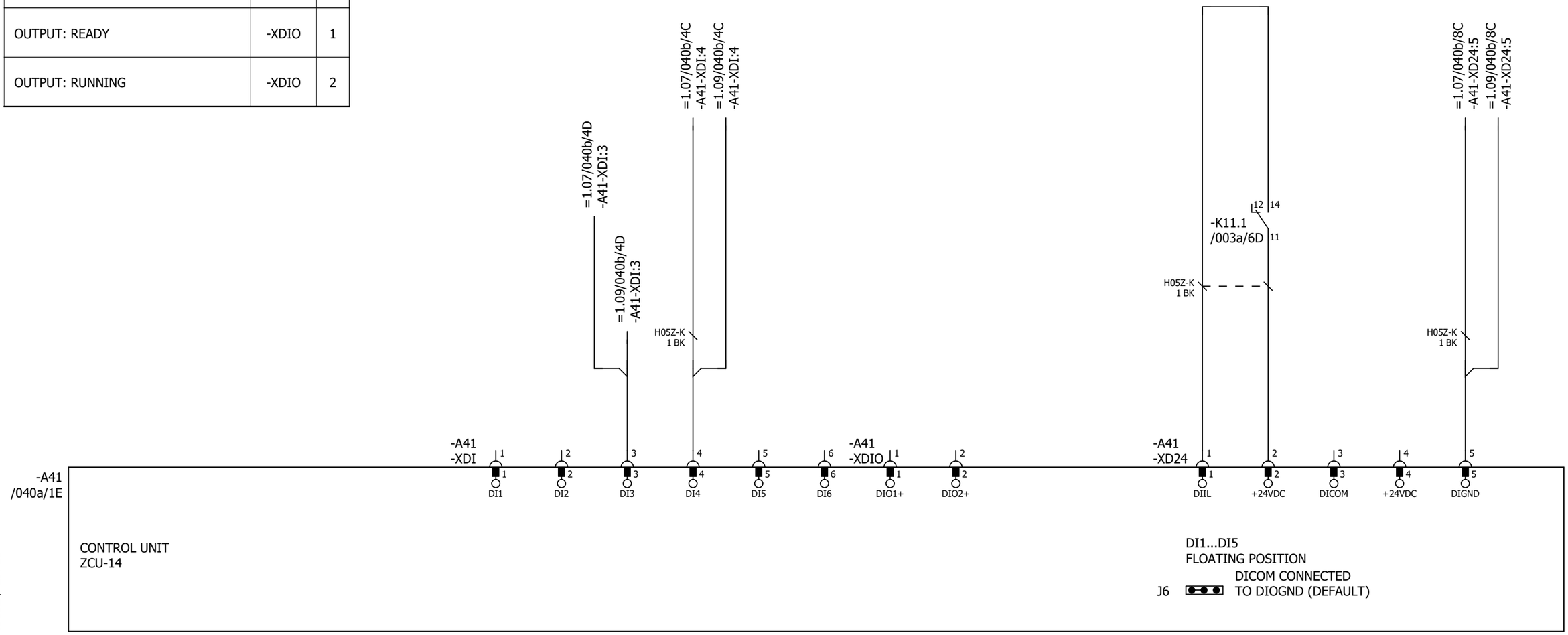

P345812 / 29711

Cust. Doc. No.	Prep. Sky-Xin Zhang 02.08.2023	Title CONTROL BOARD INV1.08 ACS880-107-0078A-3 400V	Circuit diagram EFS2
Cust. Ref. No.	App.		SAP Doc. No.
Customer WMMP	Project Zhaka Jack-up Lift System Zhaka Jack-up Lift System-1		EPLAN Doc. No. 3ABDC230674 - 1.08
			ABB Ref. No.
			Resp. Dept.

Item Des.
= 1.08
+ 1.07.1

Rev. .1 Sheet 040b
Cont. 040c

Control and status signals	Terminal	Pin
MOTOR TEMP. MONITORING 0(2)…10V	-XAI	4
AI2 NOT SPECIFIED BY DEFAULT NOT IN USE 0(4)…20mA	-XAI	6
CURR SOU MOT TEMP MONIT 0(4)...20mA	-XAO	1
CURRENT 0(4)…20mA ↔ 0(4)…MOTOR CURRENT	-XAO	3

P345812 / 29711

Cust. Doc. No.	Prep. Sky-Xin Zhang 02.08.2023	Title CONTROL BOARD INV1.08 ACS880-107-0078A-3 400V	Circuit diagram EFS2
Cust. Ref. No.	App.		SAP Doc. No.
Customer WMMP	Project Zhaka Jack-up Lift System Zhaka Jack-up Lift System-1		EPLAN Doc. No. 3ABDC230674 - 1.08
			ABB Ref. No.
			Resp. Dept.

Item Des.
= 1.08
+ 1.07.1

Rev. .1 Sheet 040c
Cont. 040d

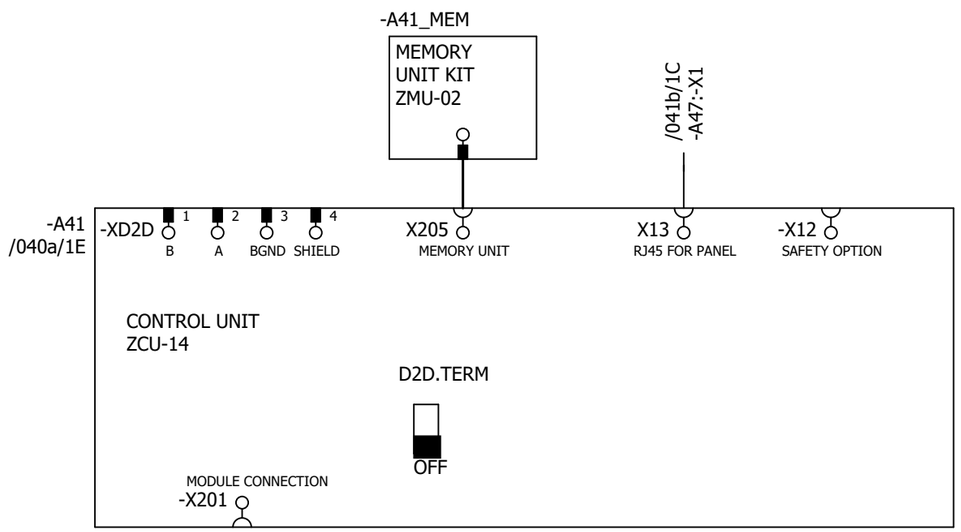

P345812 / 29711

Cust. Doc. No.	Prep. Sky-Xin Zhang 02.08.2023	Title CONTROL BOARD INV1.08 ACS880-107-0078A-3 400V	Circuit diagram EFS2
Cust. Ref. No.	App.		SAP Doc. No.
Customer WMMP	Project Zhaka Jack-up Lift System Zhaka Jack-up Lift System-1		EPLAN Doc. No. 3ABDC230674 - 1.08
			ABB Ref. No.
			Resp. Dept.

Item Des.	= 1.08 + 1.07.1
Rev. .1	Sheet 040d
Cont.	041a

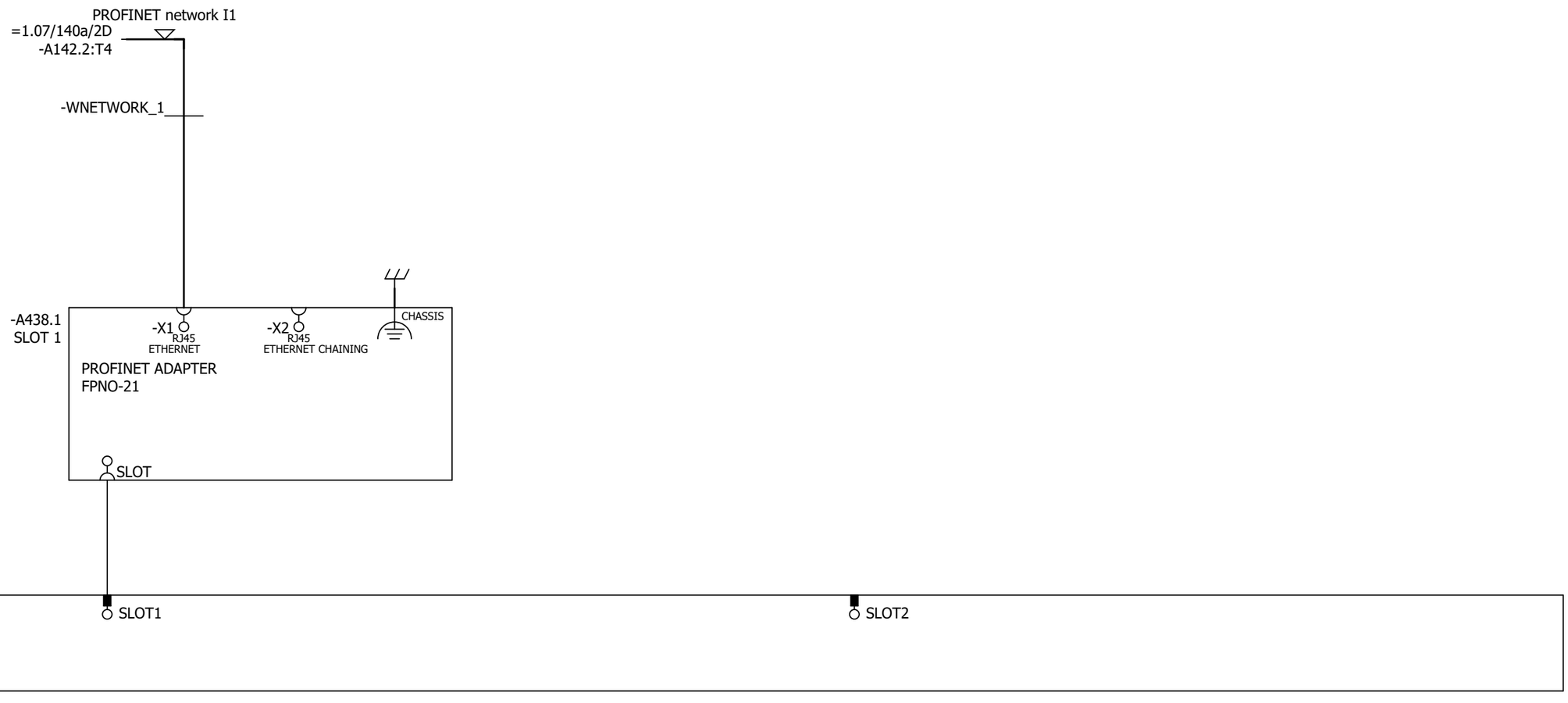

Cust. Doc. No.	Prep. Sky-Xin Zhang 02.08.2023	Title OPTION CARDS INV1.08 ACS880-107-0078A-3 400V	Circuit diagram EFS2
Cust. Ref. No.	App.		SAP Doc. No.
Customer WMMP	Project Zhaka Jack-up Lift System Zhaka Jack-up Lift System-1		EPLAN Doc. No. 3ABDC230674 - 1.08
			ABB Ref. No.
			Resp. Dept.

Item Des.
= 1.08
+ 1.07.1

Rev. .1 Sheet 041a
Cont. 041b

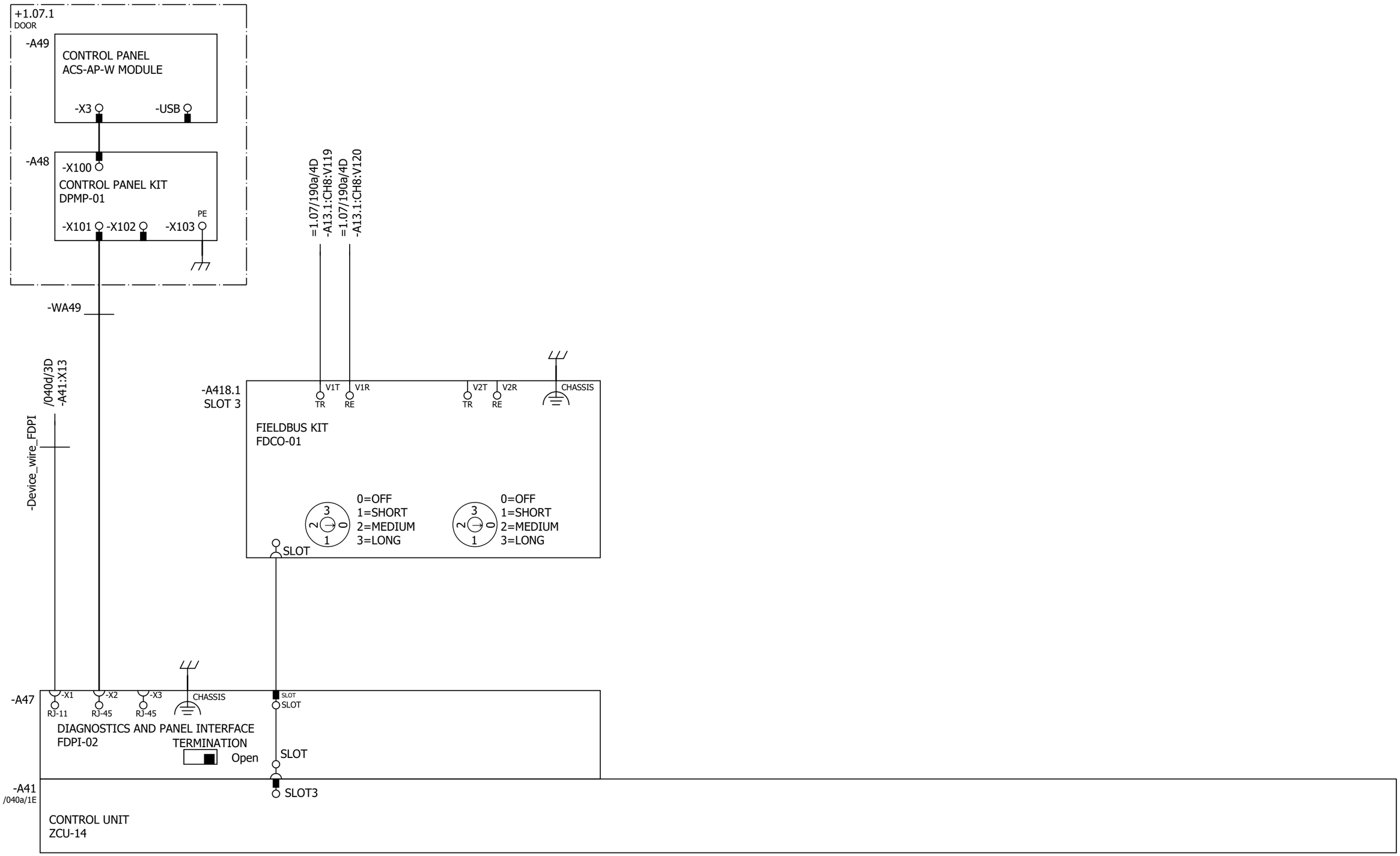

P345812 / 29711

Cust. Doc. No.	Prep. Sky-Xin Zhang 02.08.2023	Title OPTION CARDS	Circuit diagram EFS2
Cust. Ref. No.	App.	INV1.08	SAP Doc. No.
Customer WMMP	Project Zhaka Jack-up Lift System	ACS880-107-0078A-3	EPLAN Doc. No. 3ABDC230674 - 1.08
	Zhaka Jack-up Lift System-1	400V	ABB Ref. No.
			Resp. Dept.

Item Des.
= 1.08
+ 1.07.1

Rev. .1 Sheet 041b
Cont. 061a

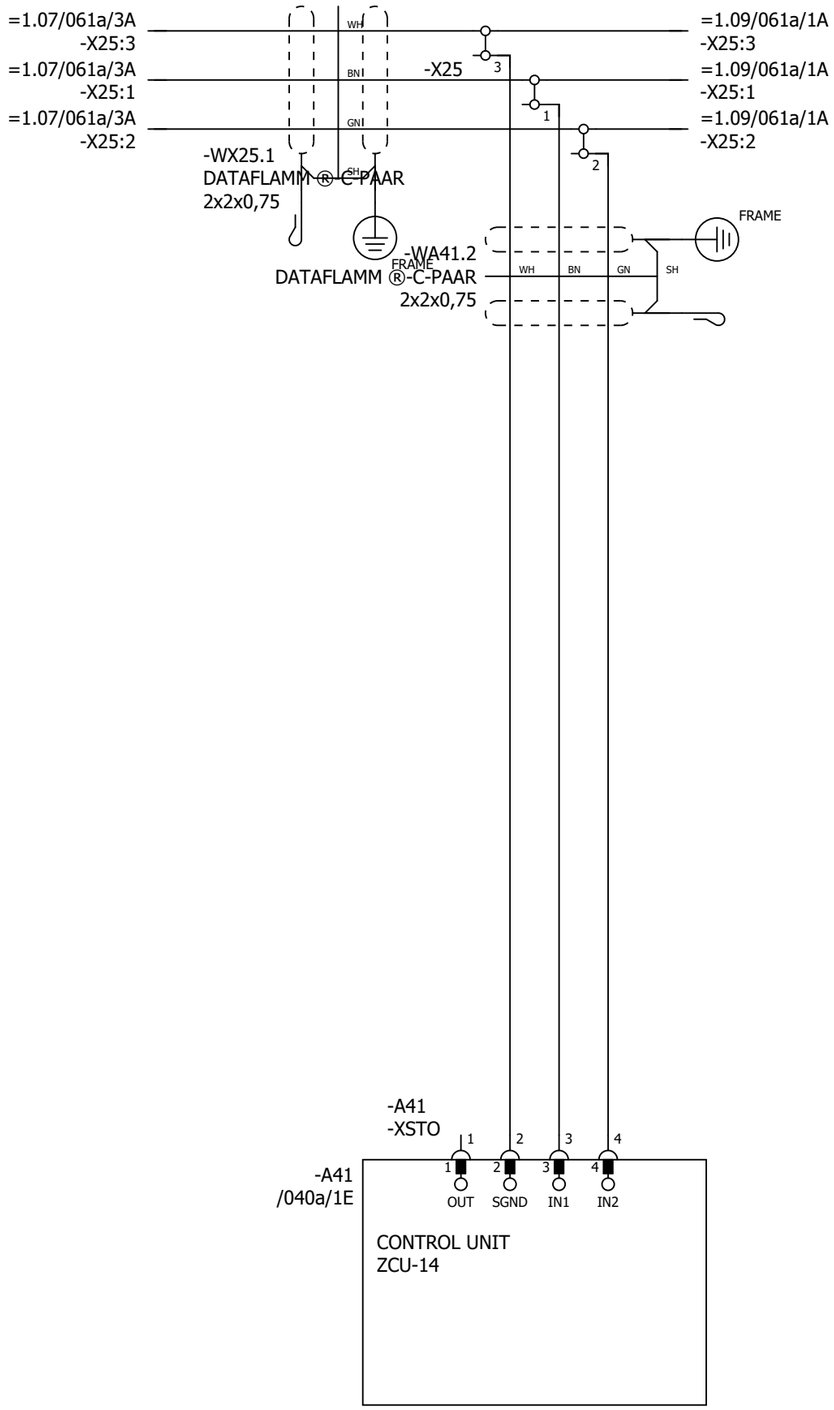

P345812 / 29711

SAFETY CIRCUIT
MACRO REVISION 6
RULES CONVERTED 19.7.2023

Cust. Doc. No.	Prep. Sky-Xin Zhang 02.08.2023	Title SAFETY CIRCUIT INV1.08 ACS880-107-0078A-3 400V	Circuit diagram EFS2
Cust. Ref. No.	App.		SAP Doc. No.
Customer WMMP	Project Zhaka Jack-up Lift System Zhaka Jack-up Lift System-1		EPLAN Doc. No. 3ABDC230674 - 1.08
			ABB Ref. No.
			Resp. Dept.

Item Des.	= 1.08 + 1.07.1
Rev. .1	Sheet 061a
Cont.	&MPC/Part list_1

Part list: 3ABDC230674DU01008

Item	Sort String	Qty.Str	Unit	Component Number	Description and text	Technical data
0010		1.000	ST		ACS880-107-0078A-3+A012+B053+C121+C132+	
0020		1.000	ST		_C206+E210+F272+F287+F288+G300+G307+G315	
0030		1.000	ST		_+G320+G330+G344+H352+H367+J400+K492+L50	
0040		1.000	ST		_3+P913+Q964	
0050		1.000	ST		=1.08	
0060		1.000	ST		+1.07.1,INU3	
0070		1.000	ST		Powerconversionequipment	
0080	-A41_MEM	1.000	PC	3AXD50000006010	MEMORY UNIT KIT ZMU-02	
0090	-T11	1.000	PC	3AUA0000120009-M	ACS880-104-0078A-3+P922	+P922
0100	SCREW	1.000	PC	3AFE68681481	SCREW K30X10 TORX	PT WN1452 ZN
0110	SOFTWARE	1.000	PC	3AUA0000153462	SOFTWARE PRIMARY CONTROL PROGRA	AINF6 FOR ZCU-12/14
0120		1.000	ST		R4imoduleDCfuse	
0130	-F11.1-2	2.000	PC	3AXD50000000219	FUSE FR27UQ69V160T/160A	6.921 CP URQ 27X60MM FERRULE;AR
0140		1.000	ST		R3i-R4imoduleDCfusebase	
0150	(-F11.1-2)	2.000	PC	3AUA0000089227	FUSE HOLDER FUSE BASE US271MI 150A	FUSE BASE US271MI 150A 800V
0160		1.000	ST		motorterminalR4i,coppercable	
0170	-X1	1.000	PC	3ABD50000000270	CONNECTOR PPAC-50	50 MM2;150 A;800V
0180	-X1	1.000	PC	3ABD50000000270	CONNECTOR PPAC-50	50 MM2;150 A;800V
0190	-X1	1.000	PC	3ABD50000000270	CONNECTOR PPAC-50	50 MM2;150 A;800V
0200		1.000	ST		24VDCsupplyZCU	
0210	-WA41_1	1.000	PC	3AXD50000005218	WIRE HARNESS 24VDC SUPPLY X51 ZCU V	HALOGEN FREE;X51_A51
0220		1.000	ST		Rooffancontrol	
0230	-WA41_3	1.000	PC	3AXD50000002688	WIRE HARNESS FAN CONTROL MAIN WIRE	HALOGEN FREE;X208_X26.3
0240		1.000	ST		Toprowmodulewireharness	
0250	-WT11	1.000	PC	3AXD50000002256	WIRE HARNESS R4I FUSE_MODULE V2	HALOGEN FREE;MAIN CIRCUIT WIRE SET
0260	-WX1	1.000	PC	3AXD50000002258	WIRE HARNESS R4I MODULE_OUTPUT TR V	HALOGEN FREE;MAIN CIRCUIT WIRE SET
0270		1.000	ST		Optionmodule	
0280	-A418.1	1.000	PC	3AUA0000107392	COMMUNIC. ADAPTER FDCO-01	
0290		1.000	ST		Controlpanel	
0300	-A47	1.000	PC	3AUA0000108650	FIELDBUS KIT FDPI-02	PANEL BUS ADAPTER
0310	-A48	1.000	PC	3AUA0000108878	CONTROL PANEL KIT DPMP-01	DPMP-01
0320	-A49	1.000	PC	3AXD50000025964	CONTROL PANEL ACS-AP-W MODULE	ASSISTANT PANEL WIRELESS CPU1
0330		1.000	ST		DCfusesupervision	

P345812 / 29711

Cust. Doc. No.	Prep.	Title PART LIST INV1.08 ACS880-107-0078A-3 400V	Item Des. = 1.08 +
Cust. Ref. No.	App.		SAP Doc. No.
Customer WMMP	Project Zhaka Jack-up Lift System Zhaka Jack-up Lift System-1		EPLAN Doc. No. 3ABDC230674 - 1.08
			ABB Ref. No. / Rev. / Sheet Part list_1
			Resp. Dept. / Cont. Part list_2

Part list: 3ABDC230674DU01008

Item	Sort String	Qty.Str	Unit	Component Number	Description and text	Technical data
0340	-K11.1-2	2.000	PC	3AXD50000021313	RELAY DEK_REL_G24/21	250 V;6 A;COIL 24VDC
0350		1.000	ST		FieldBus	
0360	-A438.1	1.000	PC	3AXD50000192779	OPTION MODULE FPNO-21	PROFINET IO
0370		1.000	ST		Supplementtorelay	
0380	(-K11.1)	1.000	PC	3AXD50000021312	TERMINAL BLOCK ST EB2_DIK_RD 2716693	2POLE, 6,15 MM PITCH;FOR DEK RELAYS

P345812 / 29711

Cust. Doc. No.	Prep.	Title PART LIST INV1.08 ACS880-107-0078A-3 400V	Item Des. = 1.08 +
Cust. Ref. No.	App.		SAP Doc. No.
Customer WMMP	Project Zhaka Jack-up Lift System Zhaka Jack-up Lift System-1		EPLAN Doc. No. 3ABDC230674 - 1.08
			ABB Ref. No. / Rev. / Sheet Part list_2
			Resp. Dept. / Cont. &EMA/1

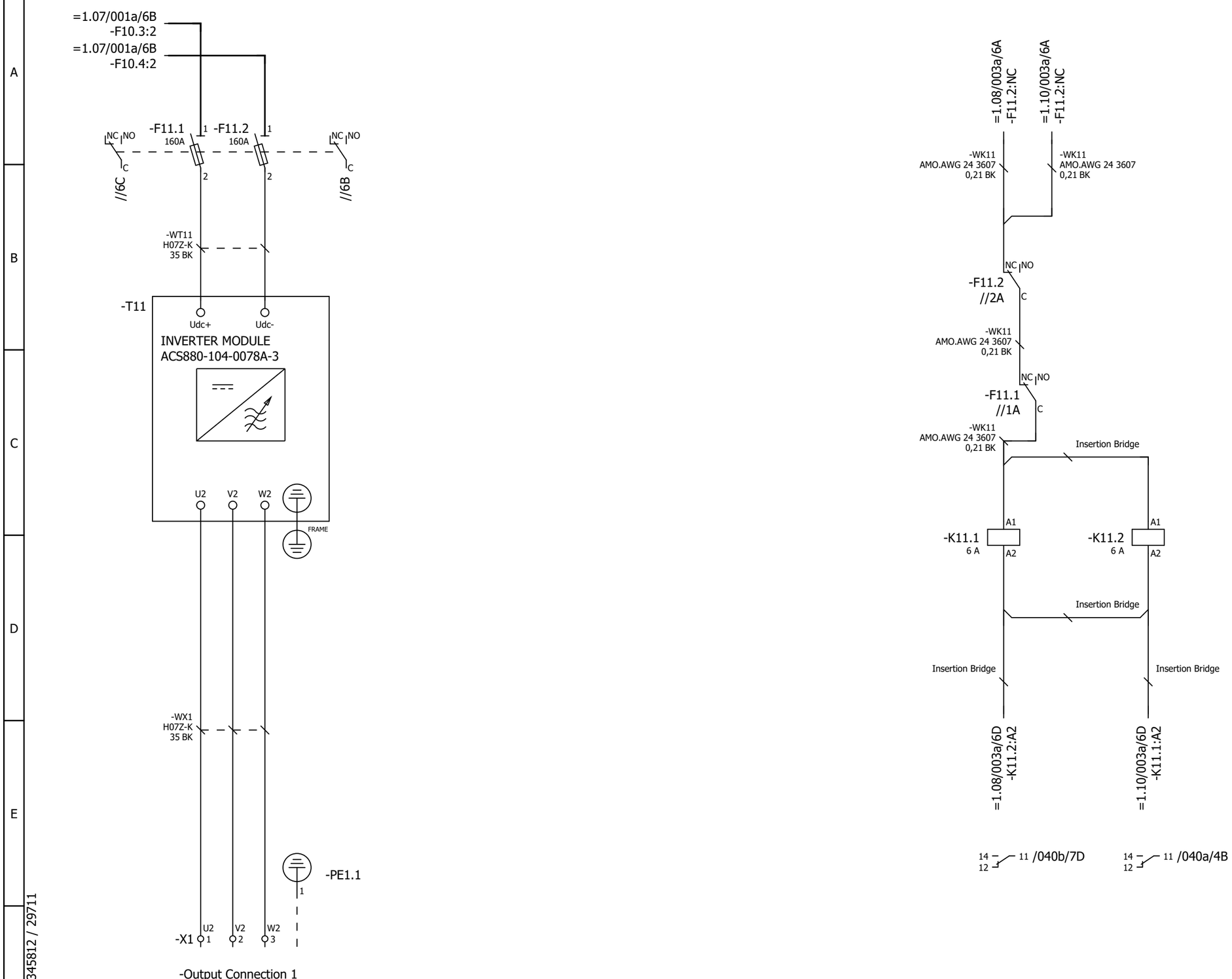

P345812 / 29711

Cust. Doc. No.	Prep. Sky-Xin Zhang 02.08.2023	Title MAIN CIRCUIT	Circuit diagram EFS2
Cust. Ref. No.	App.	INV1.09	SAP Doc. No.
Customer WMMP	Project Zhaka Jack-up Lift System	ACS880-107-0078A-3	EPLAN Doc. No. 3ABDC230674 - 1.09
	Zhaka Jack-up Lift System-1	400V	ABB Ref. No.
			Resp. Dept.

Item Des.
= 1.09
+ 1.07.1

Rev. .1 Sheet 003a
Cont. 040a

Control and status signals	Terminal	Pin
E-STOP FEEDBACK 1 - ESTOP ACTIVE	-XRO1	12
RUNNING 1 - RUNNING	-XRO2	22
FAULT (-1) 1 - NO FAULT	-XRO3	32

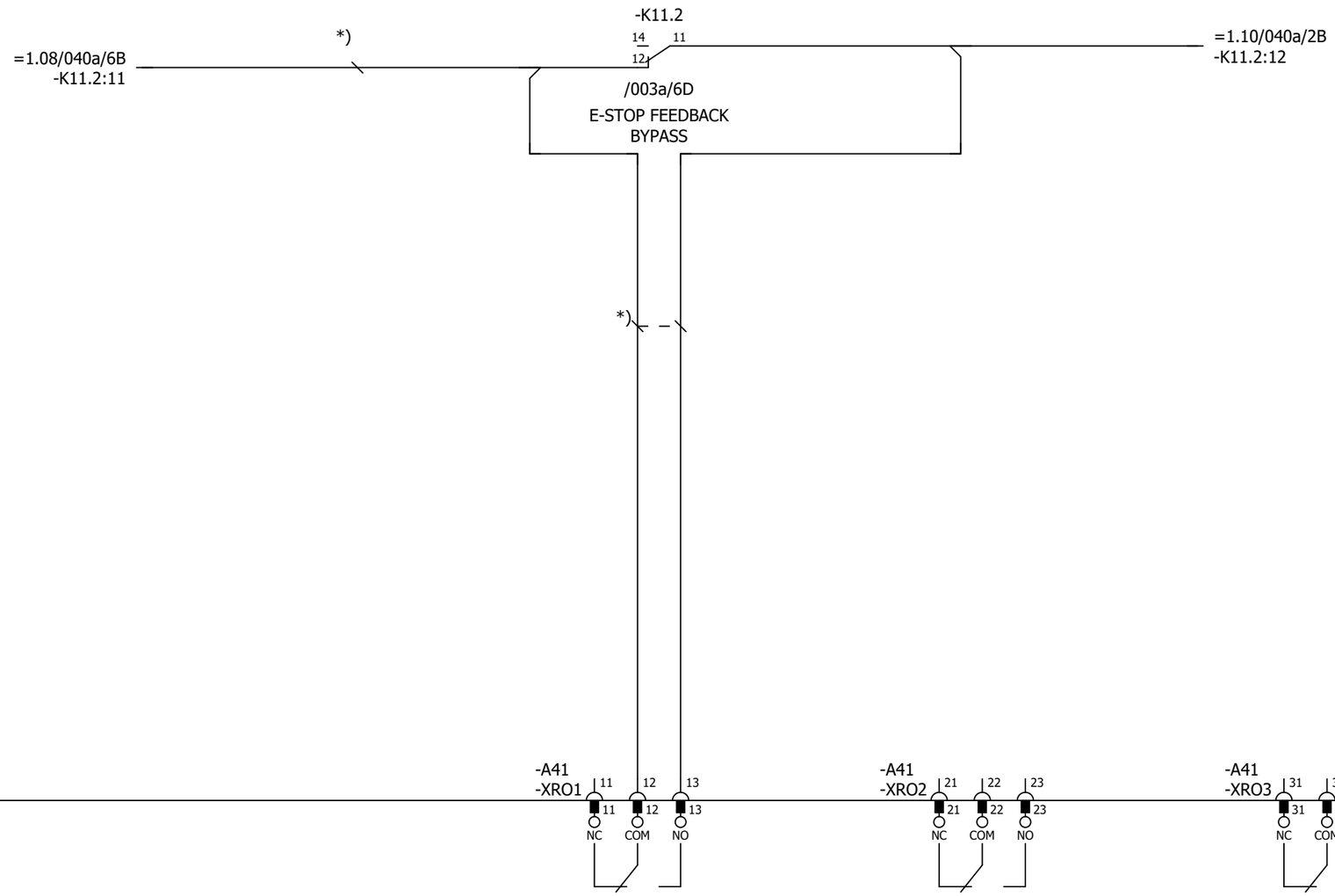

Cust. Doc. No.	Prep. Sky-Xin Zhang 02.08.2023	Title CONTROL BOARD INV1.09 ACS880-107-0078A-3 400V	Circuit diagram EFS2
Cust. Ref. No.	App.		SAP Doc. No.
Customer WMMP	Project Zhaka Jack-up Lift System Zhaka Jack-up Lift System-1		EPLAN Doc. No. 3ABDC230674 - 1.09
			ABB Ref. No.
			Resp. Dept.

Item Des.
= 1.09
+ 1.07.1

Rev. .1 Sheet 040a
Cont. 040b

Control and status signals	Terminal	Pin
DIGITAL INTERLOCK	-XD24	1
START/STOP 1 - START	-XDI	1
FORWARD/REVERSE 1 - REVERSE	-XDI	2
RESET	-XDI	3
EMERGENCY STOP 0 - ACTIVE	-XDI	4
NOT SPECIFIED	-XDI	5
DI6 NOT IN USE	-XDI	6
OUTPUT: READY	-XDIO	1
OUTPUT: RUNNING	-XDIO	2

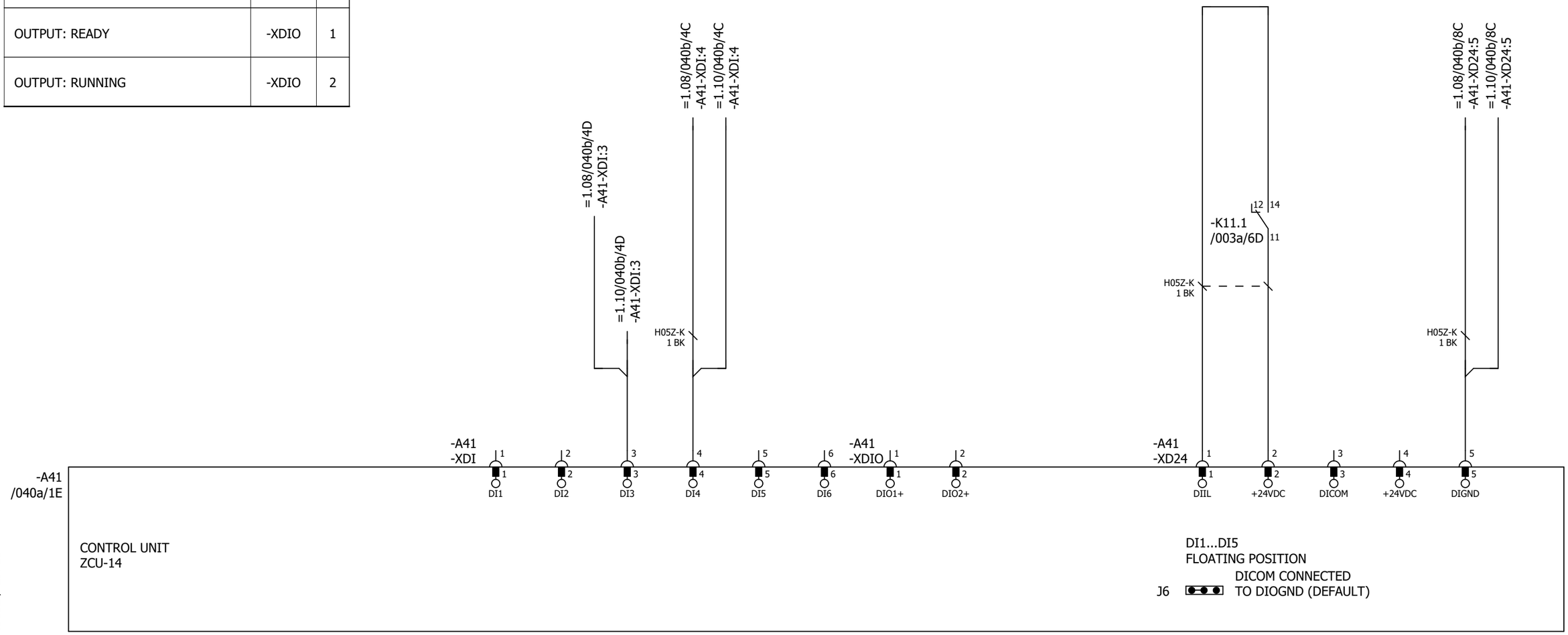

Cust. Doc. No.	Prep. Sky-Xin Zhang 02.08.2023	Title CONTROL BOARD	Circuit diagram EFS2	Item Des.	
Cust. Ref. No.	App.	INV1.09	SAP Doc. No.	= 1.09	
Customer WMMP	Project Zhaka Jack-up Lift System	ACS880-107-0078A-3	EPLAN Doc. No. 3ABDC230674 - 1.09	+ 1.07.1	
	Zhaka Jack-up Lift System-1	400V	ABB Ref. No.	Rev. .1	Sheet 040b
			Resp. Dept.	Cont.	040c

Control and status signals	Terminal	Pin
MOTOR TEMP. MONITORING 0(2)…10V	-XAI	4
AI2 NOT SPECIFIED BY DEFAULT NOT IN USE 0(4)…20mA	-XAI	6
CURR SOU MOT TEMP MONIT 0(4)...20mA	-XAO	1
CURRENT 0(4)…20mA ↔ 0(4)…MOTOR CURRENT	-XAO	3

P345812 / 29711

Cust. Doc. No.	Prep. Sky-Xin Zhang 02.08.2023	Title CONTROL BOARD INV1.09 ACS880-107-0078A-3 400V	Circuit diagram EFS2
Cust. Ref. No.	App.		SAP Doc. No.
Customer WMMP	Project Zhaka Jack-up Lift System Zhaka Jack-up Lift System-1		EPLAN Doc. No. 3ABDC230674 - 1.09
			ABB Ref. No.
			Resp. Dept.

Item Des.
= 1.09
+ 1.07.1

Rev. .1 Sheet 040c
Cont. 040d

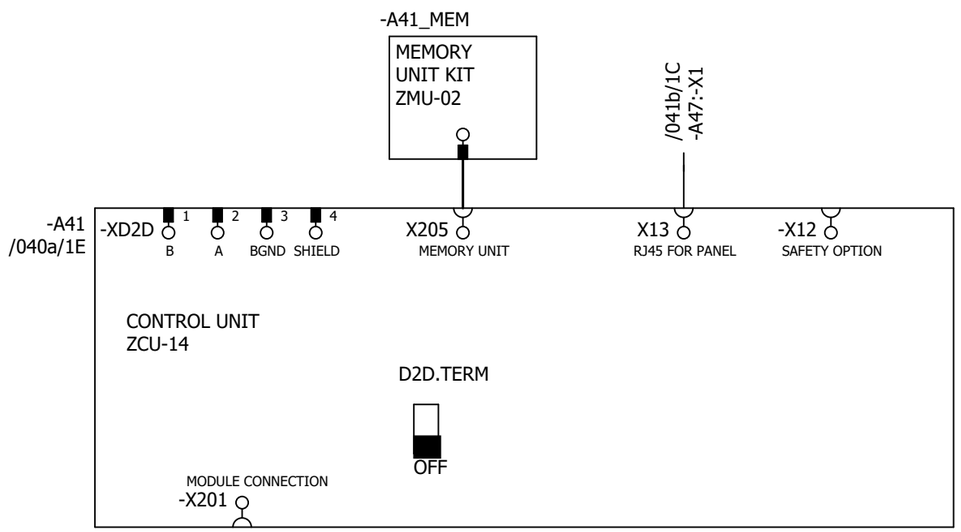

P345812 / 29711

Cust. Doc. No.	Prep. Sky-Xin Zhang 02.08.2023	Title CONTROL BOARD INV1.09 ACS880-107-0078A-3 400V	Circuit diagram EFS2
Cust. Ref. No.	App.		SAP Doc. No.
Customer WMMP	Project Zhaka Jack-up Lift System Zhaka Jack-up Lift System-1		EPLAN Doc. No. 3ABDC230674 - 1.09
			ABB Ref. No.
			Resp. Dept.

Item Des.	= 1.09 + 1.07.1
Rev. .1	Sheet 040d
Cont.	041a

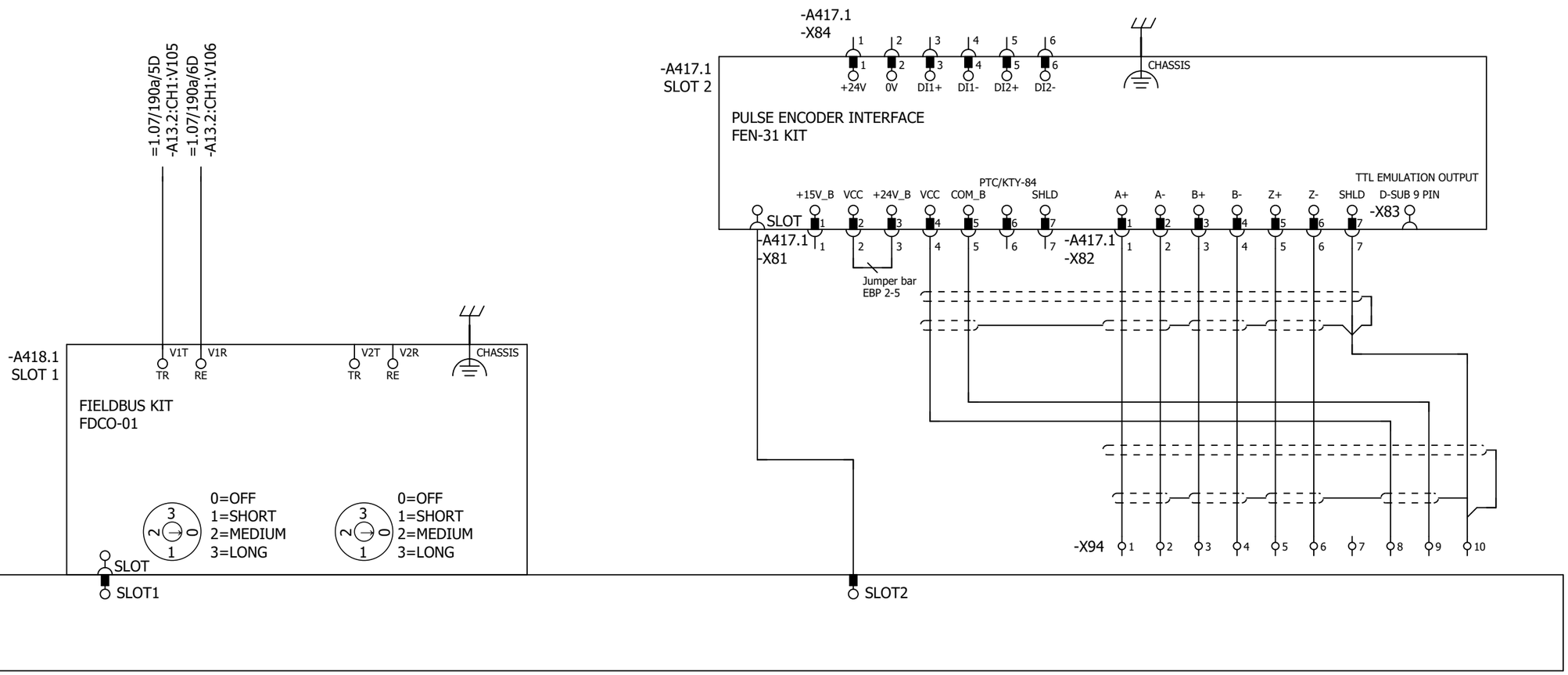

Cust. Doc. No.	Prep. Sky-Xin Zhang 02.08.2023	Title OPTION CARDS	Circuit diagram EFS2	Item Des.	
Cust. Ref. No.	App.	INV1.09	SAP Doc. No.	= 1.09	
Customer WMMP	Project Zhaka Jack-up Lift System	ACS880-107-0078A-3	EPLAN Doc. No. 3ABDC230674 - 1.09	+ 1.07.1	
	Zhaka Jack-up Lift System-1	400V	ABB Ref. No.	Rev. .1	Sheet 041a
			Resp. Dept.	Cont.	041b

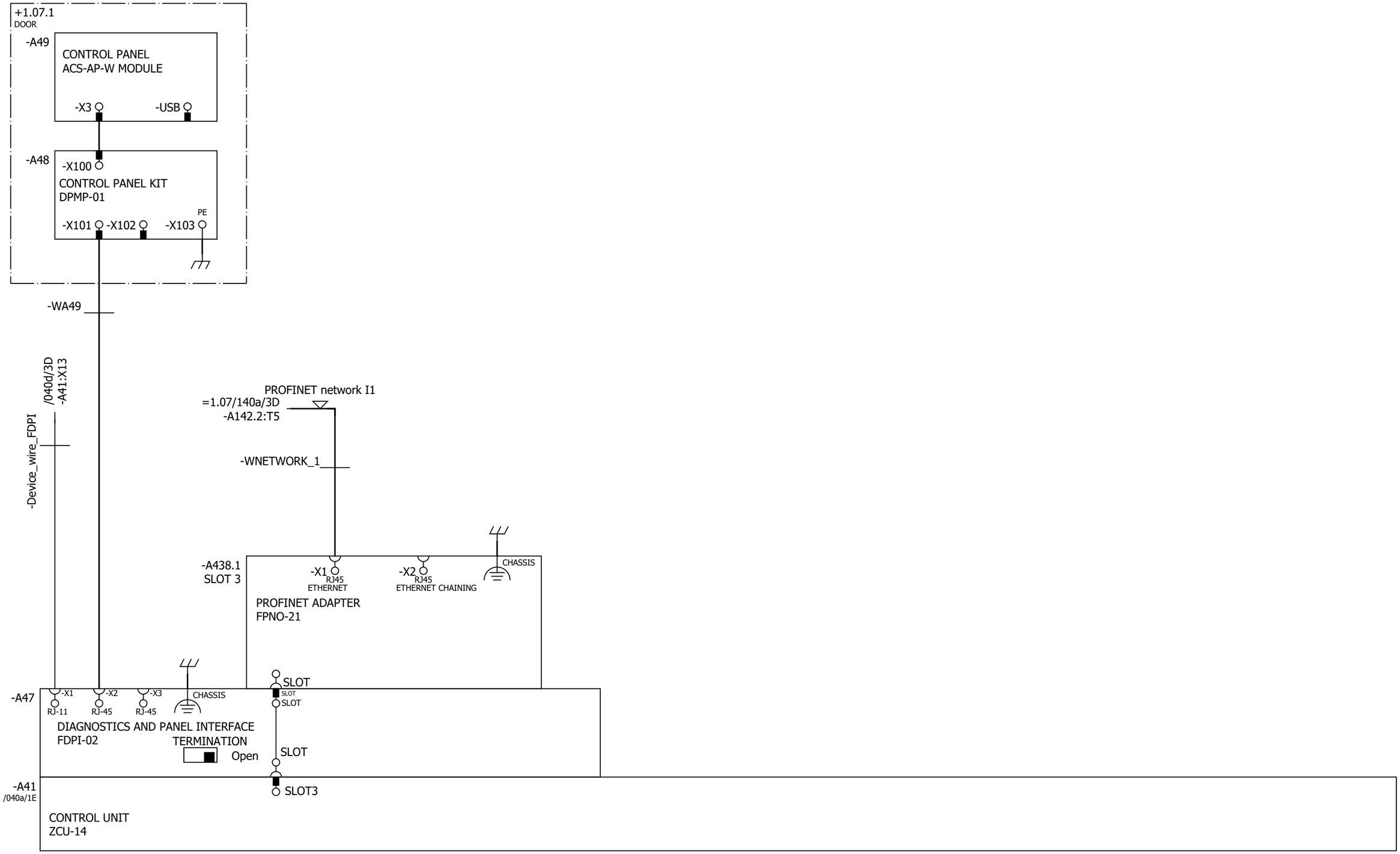

Cust. Doc. No.	Prep. Sky-Xin Zhang 02.08.2023	Title OPTION CARDS	Circuit diagram EFS2	Item Des.	
Cust. Ref. No.	App.	INV1.09	SAP Doc. No.	= 1.09	
Customer WMMP	Project Zhaka Jack-up Lift System	ACS880-107-0078A-3	EPLAN Doc. No. 3ABDC230674 - 1.09	+ 1.07.1	
		400V	ABB Ref. No.	Rev. .1	Sheet 041b
	Zhaka Jack-up Lift System-1		Resp. Dept.	Cont.	061a

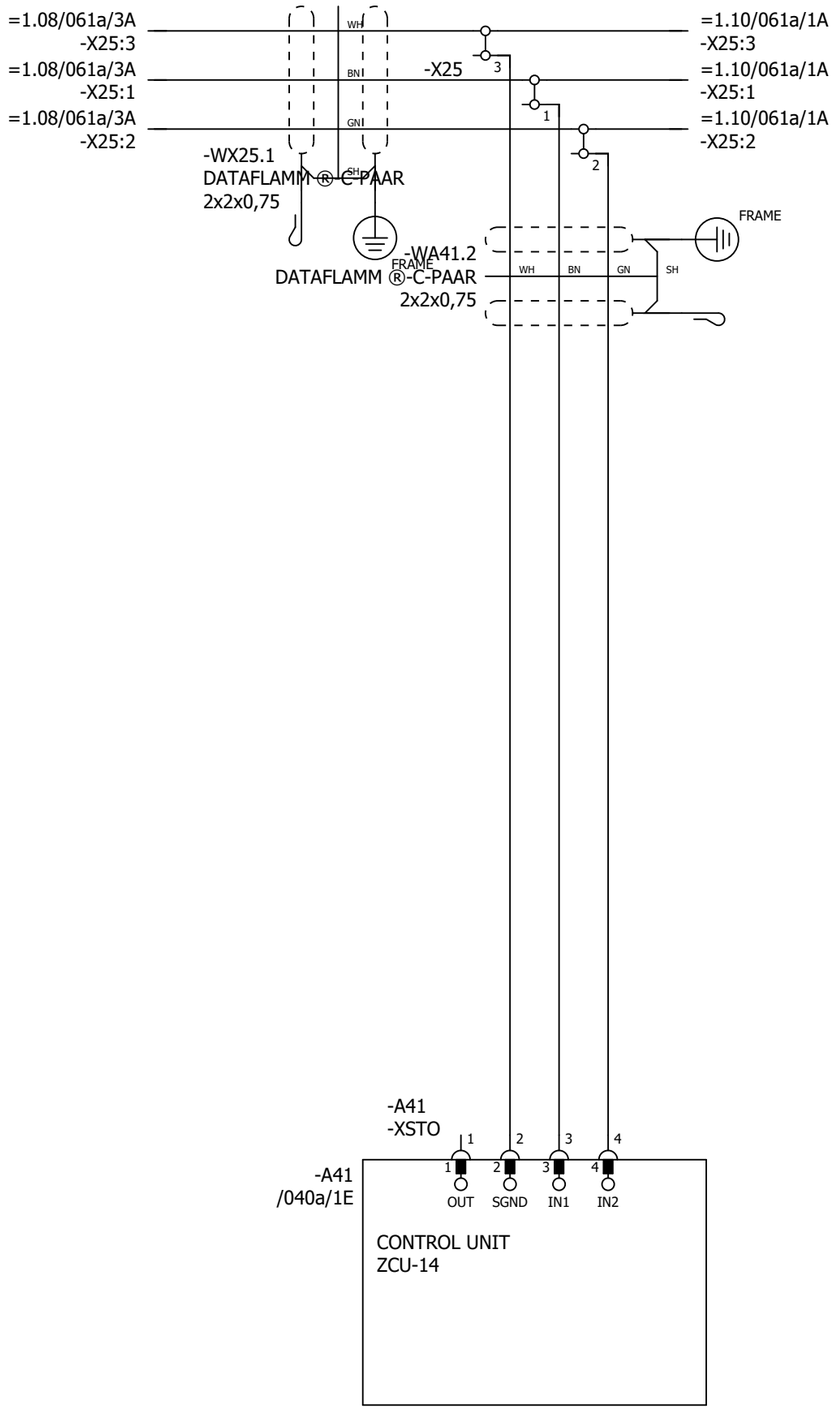

P345812 / 29711

SAFETY CIRCUIT
MACRO REVISION 6
RULES CONVERTED 19.7.2023

Cust. Doc. No.	Prep. Sky-Xin Zhang 02.08.2023	Title SAFETY CIRCUIT INV1.09 ACS880-107-0078A-3 400V	Circuit diagram EFS2
Cust. Ref. No.	App.		SAP Doc. No.
Customer WMMP	Project Zhaka Jack-up Lift System Zhaka Jack-up Lift System-1		EPLAN Doc. No. 3ABDC230674 - 1.09
			ABB Ref. No.
			Resp. Dept.

Item Des.
= 1.09
+ 1.07.1

Rev. .1 Sheet 061a

Cont. &MPC/Part list_1

Part list: 3ABDC230674DU01009

Item	Sort String	Qty.Str	Unit	Component Number	Description and text	Technical data
0010		1.000	ST		ACS880-107-0078A-3+A012+B053+C121+C132+	
0020		1.000	ST		_C206+E210+F272+F287+F288+G300+G307+G315	
0030		1.000	ST		_+G320+G330+G344+H352+H367+J400+K492+L50	
0040		1.000	ST		_2+L503+P913+Q964	
0050		1.000	ST		=1.09	
0060		1.000	ST		+1.07.1,INU3	
0070		1.000	ST		Powerconversionequipment	
0080	-A41_MEM	1.000	PC	3AXD50000006010	MEMORY UNIT KIT ZMU-02	
0090	-T11	1.000	PC	3AUA0000120009-M	ACS880-104-0078A-3+P922	+P922
0100	SCREW	1.000	PC	3AFE68681481	SCREW K30X10 TORX	PT WN1452 ZN
0110	SOFTWARE	1.000	PC	3AUA0000153462	SOFTWARE PRIMARY CONTROL PROGRA	AINF6 FOR ZCU-12/14
0120		1.000	ST		R4imoduleDCfuse	
0130	-F11.1-2	2.000	PC	3AXD50000000219	FUSE FR27UQ69V160T/160A	6.921 CP URQ 27X60MM FERRULE;AR
0140		1.000	ST		R3i-R4imoduleDCfusebase	
0150	(-F11.1-2)	2.000	PC	3AUA0000089227	FUSE HOLDER FUSE BASE US271MI 150A	FUSE BASE US271MI 150A 800V
0160		1.000	ST		motorterminalR4i,coppercable	
0170	-X1	1.000	PC	3ABD50000000270	CONNECTOR PPAC-50	50 MM2;150 A;800V
0180	-X1	1.000	PC	3ABD50000000270	CONNECTOR PPAC-50	50 MM2;150 A;800V
0190	-X1	1.000	PC	3ABD50000000270	CONNECTOR PPAC-50	50 MM2;150 A;800V
0200		1.000	ST		24VDCsupplyZCU	
0210	-WA41_1	1.000	PC	3AXD50000005218	WIRE HARNESS 24VDC SUPPLY X51 ZCU V	HALOGEN FREE;X51_A51
0220		1.000	ST		Rooffancontrol	
0230	-WA41_3	1.000	PC	3AXD50000002688	WIRE HARNESS FAN CONTROL MAIN WIRE	HALOGEN FREE;X208_X26.3
0240		1.000	ST		Toprowmodulewireharness	
0250	-WT11	1.000	PC	3AXD50000002256	WIRE HARNESS R4I FUSE_MODULE V2	HALOGEN FREE;MAIN CIRCUIT WIRE SET
0260	-WX1	1.000	PC	3AXD50000002258	WIRE HARNESS R4I MODULE_OUTPUT TR V	HALOGEN FREE;MAIN CIRCUIT WIRE SET
0270		1.000	ST		Encoder	
0280	-A417.1	1.000	PC	3AFE68978955	COMMUNIC. ADAPTER FEN-31	FEN-31
0290		1.000	ST		Optionmodule	
0300	-A418.1	1.000	PC	3AUA0000107392	COMMUNIC. ADAPTER FDCO-01	
0310		1.000	ST		Controlpanel	
0320	-A47	1.000	PC	3AUA0000108650	FIELDBUS KIT FDPI-02	PANEL BUS ADAPTER
0330	-A48	1.000	PC	3AUA0000108878	CONTROL PANEL KIT DPMP-01	DPMP-01

P345812 / 29711

Cust. Doc. No.	Prep.	Title PART LIST INV1.09 ACS880-107-0078A-3 400V	Item Des. = 1.09 +
Cust. Ref. No.	App.		SAP Doc. No.
Customer WMMP	Project Zhaka Jack-up Lift System Zhaka Jack-up Lift System-1		EPLAN Doc. No. 3ABDC230674 - 1.09
			ABB Ref. No. / Rev. / Sheet Part list_1
			Resp. Dept. / Cont. Part list_2

Part list: 3ABDC230674DU01009

Item	Sort String	Qty.Str	Unit	Component Number	Description and text	Technical data
0340	-A49	1.000	PC	3AXD50000025964	CONTROL PANEL ACS-AP-W MODULE	ASSISTANT PANEL WIRELESS CPU1
0350		1.000	ST		DCfusesupervision	
0360	-K11.1-2	2.000	PC	3AXD50000021313	RELAY DEK_REL_G24/21	250 V;6 A;COIL 24VDC
0370		1.000	ST		FieldBus	
0380	-A438.1	1.000	PC	3AXD50000192779	OPTION MODULE FPNO-21	PROFINET IO
0390		1.000	ST		Supplementtorelay	
0400	(-K11.1)	1.000	PC	3AXD50000021312	TERMINAL BLOCK ST EB2_DIK_RD 2716693	2POLE, 6,15 MM PITCH;FOR DEK RELAYS

P345812 / 29711

Cust. Doc. No.	Prep.	Title PART LIST INV1.09 ACS880-107-0078A-3 400V	Item Des. = 1.09 +
Cust. Ref. No.	App.		SAP Doc. No.
Customer WMMP	Project Zhaka Jack-up Lift System Zhaka Jack-up Lift System-1		EPLAN Doc. No. 3ABDC230674 - 1.09
			ABB Ref. No. / Rev. / Sheet Part list_2
			Resp. Dept. / Cont. &EMA/1

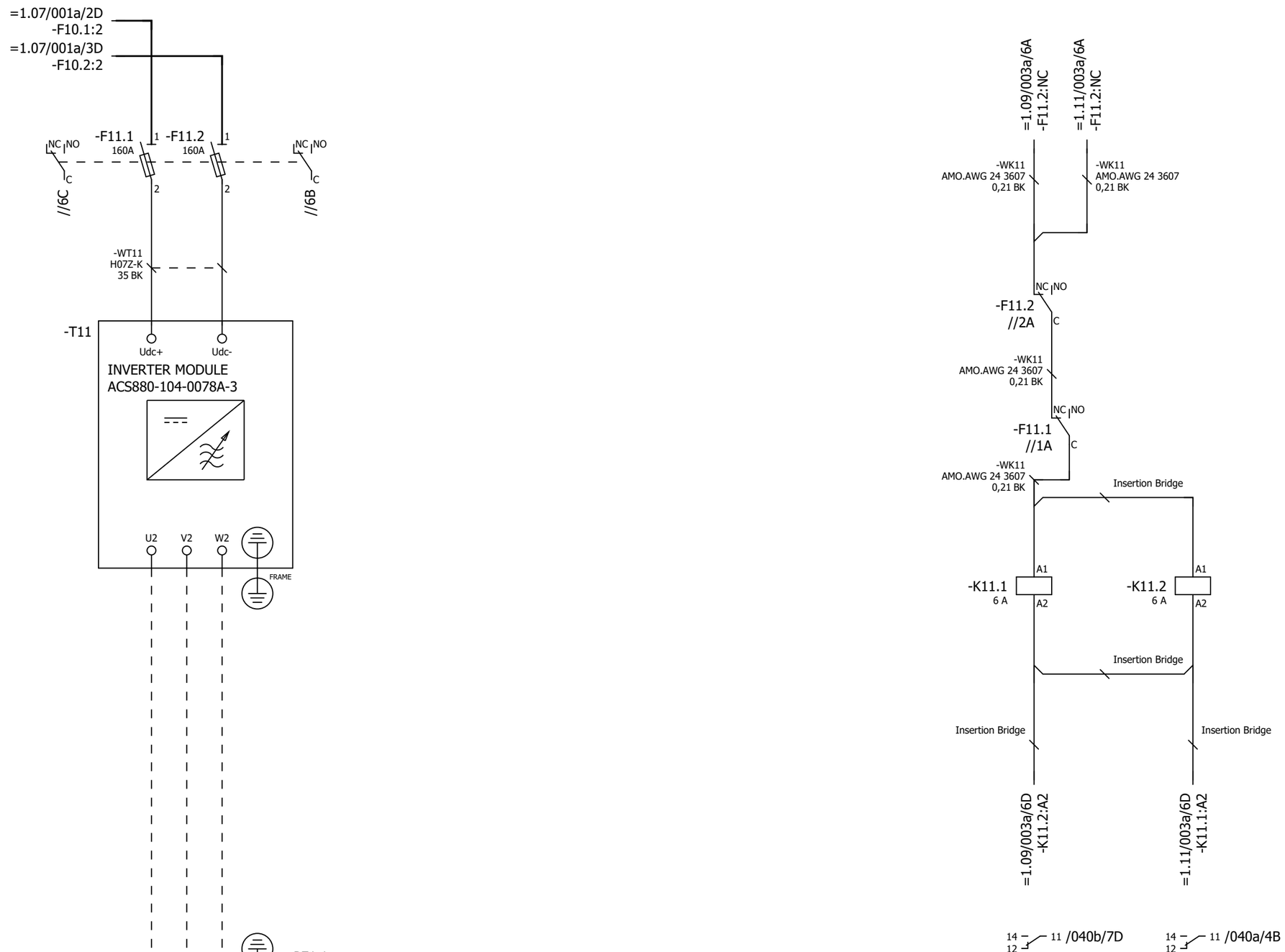

P345812 / 29711

Cust. Doc. No.	Prep. Sky-Xin Zhang 02.08.2023	Title MAIN CIRCUIT	Circuit diagram EFS2
Cust. Ref. No.	App.	INV1.10	SAP Doc. No.
Customer WMMP	Project Zhaka Jack-up Lift System	ACS880-107-0078A-3	EPLAN Doc. No. 3ABDC230674 - 1.10
	Zhaka Jack-up Lift System-1	400V	ABB Ref. No.
			Resp. Dept.

Item Des.
= 1.10
+ 1.07.1

Rev. .1 Sheet 003a
Cont. 040a

Control and status signals	Terminal	Pin
E-STOP FEEDBACK 1 - ESTOP ACTIVE	-XRO1	12
RUNNING 1 - RUNNING	-XRO2	22
FAULT (-1) 1 - NO FAULT	-XRO3	32

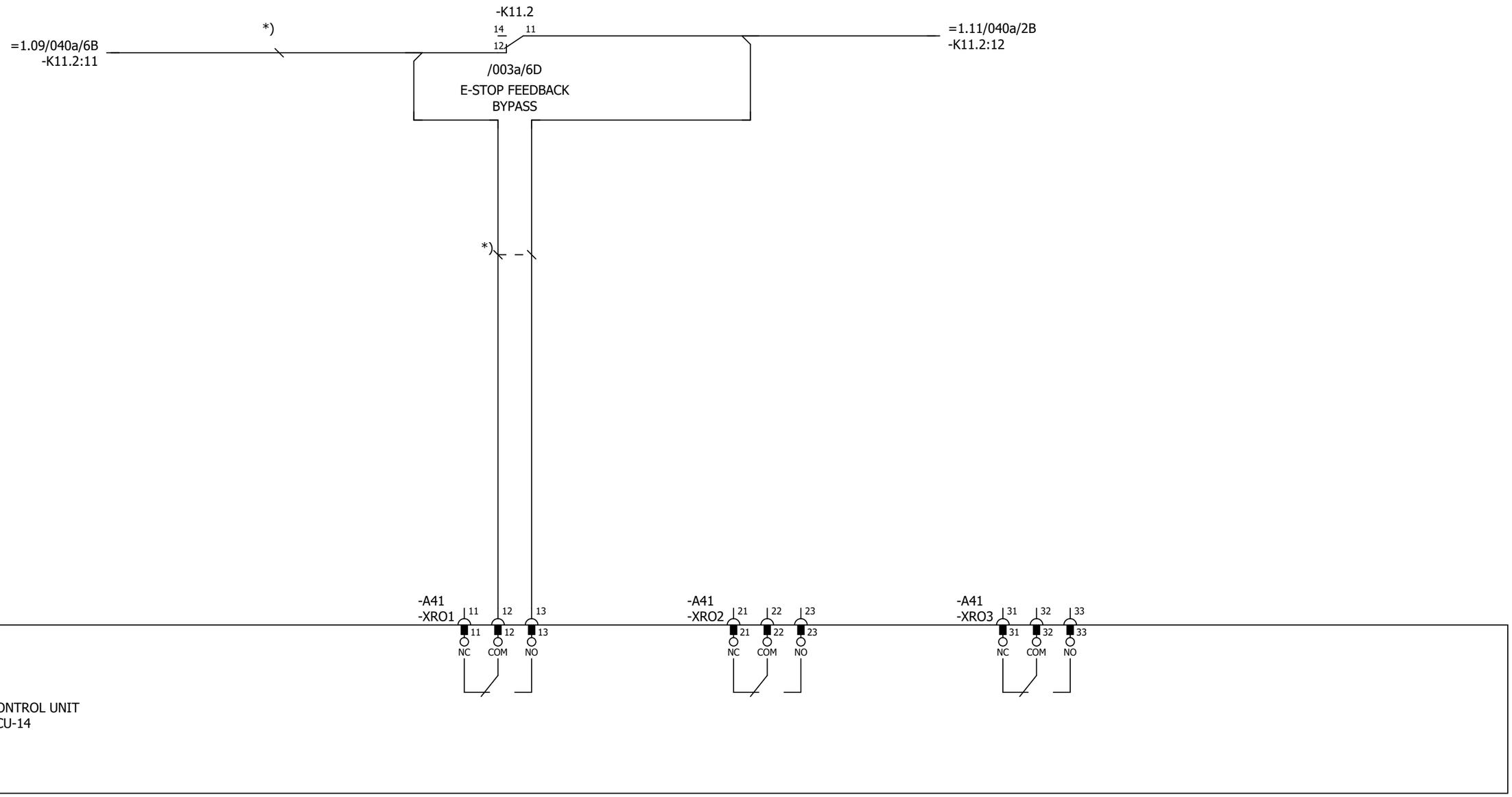

Cust. Doc. No.	Prep. Sky-Xin Zhang 02.08.2023	Title CONTROL BOARD INV1.10 ACS880-107-0078A-3 400V	Circuit diagram EFS2
Cust. Ref. No.	App.		SAP Doc. No.
Customer WMMP	Project Zhaka Jack-up Lift System Zhaka Jack-up Lift System-1		EPLAN Doc. No. 3ABDC230674 - 1.10
			ABB Ref. No.
			Resp. Dept.

Item Des.
= 1.10
+ 1.07.1

Rev. .1 Sheet 040a
Cont. 040b

Control and status signals	Terminal	Pin
DIGITAL INTERLOCK	-XD24	1
START/STOP 1 - START	-XDI	1
FORWARD/REVERSE 1 - REVERSE	-XDI	2
RESET	-XDI	3
EMERGENCY STOP 0 - ACTIVE	-XDI	4
NOT SPECIFIED	-XDI	5
DI6 NOT IN USE	-XDI	6
OUTPUT: READY	-XDIO	1
OUTPUT: RUNNING	-XDIO	2

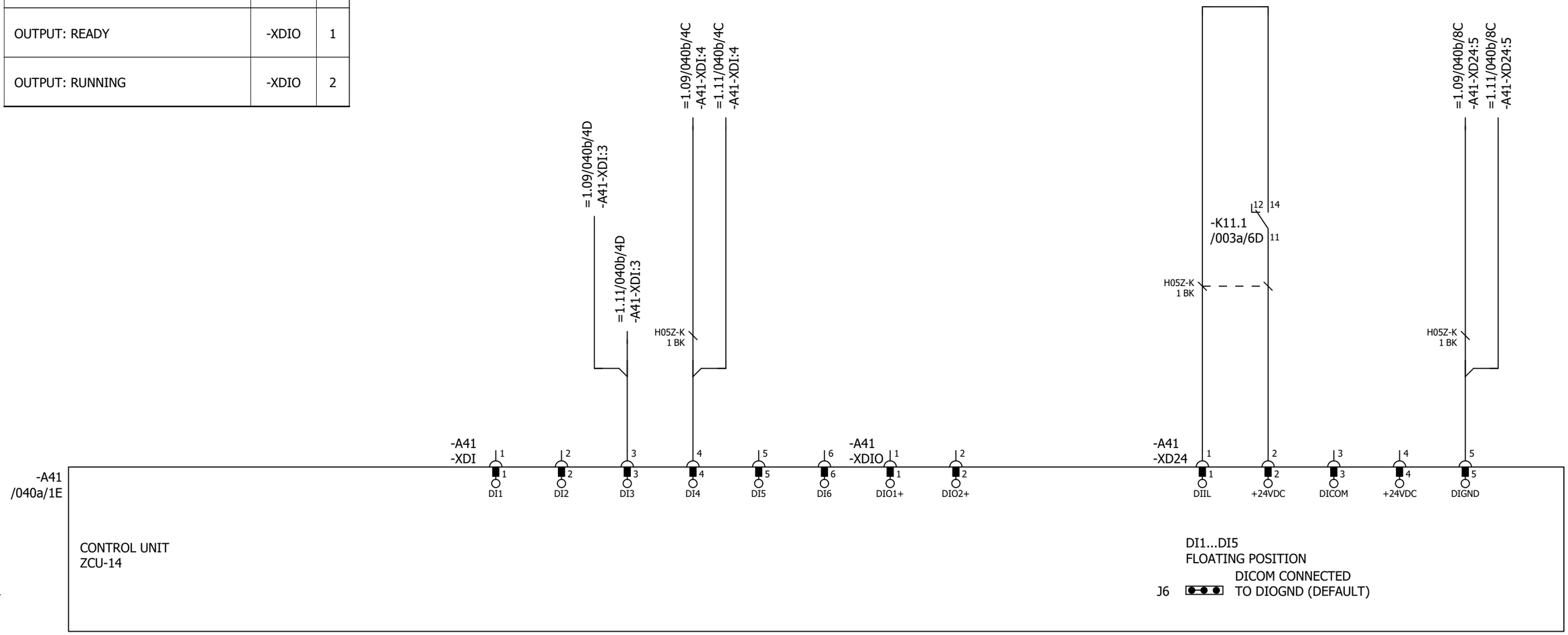

P345812 / 29711

Cust. Doc. No.	Prep. Sky-Xin Zhang 02.08.2023	Title CONTROL BOARD INV1.10 ACS880-107-0078A-3 400V	Circuit diagram EFS2
Cust. Ref. No.	App.		SAP Doc. No.
Customer WMMP	Project Zhaka Jack-up Lift System Zhaka Jack-up Lift System-1		EPLAN Doc. No. 3ABDC230674 - 1.10
			ABB Ref. No.
			Resp. Dept.

Item Des.
= 1.10
+ 1.07.1

Rev. .1 Sheet 040b
Cont. 040c

Control and status signals	Terminal	Pin
MOTOR TEMP. MONITORING 0(2)…10V	-XAI	4
AI2 NOT SPECIFIED BY DEFAULT NOT IN USE 0(4)…20mA	-XAI	6
CURR SOU MOT TEMP MONIT 0(4)...20mA	-XAO	1
CURRENT 0(4)…20mA ↔ 0(4)…MOTOR CURRENT	-XAO	3

P345812 / 29711

Cust. Doc. No.	Prep. Sky-Xin Zhang 02.08.2023	Title CONTROL BOARD INV1.10 ACS880-107-0078A-3 400V	Circuit diagram EFS2
Cust. Ref. No.	App.		SAP Doc. No.
Customer WMMP	Project Zhaka Jack-up Lift System Zhaka Jack-up Lift System-1		EPLAN Doc. No. 3ABDC230674 - 1.10
			ABB Ref. No.
			Resp. Dept.

Item Des.
= 1.10
+ 1.07.1

Rev. .1 Sheet 040c
Cont. 040d

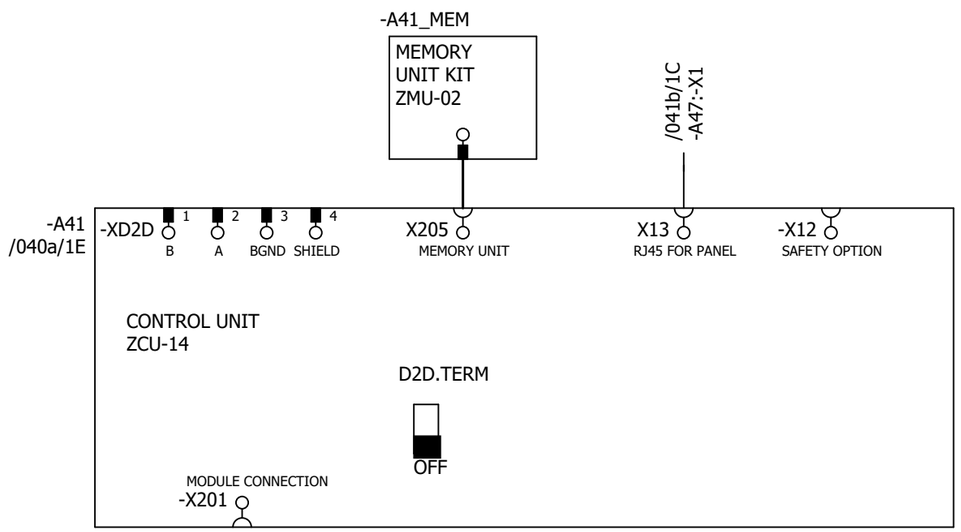

P345812 / 29711

Cust. Doc. No.	Prep. Sky-Xin Zhang 02.08.2023	Title CONTROL BOARD INV1.10 ACS880-107-0078A-3 400V	Circuit diagram EFS2
Cust. Ref. No.	App.		SAP Doc. No.
Customer WMMP	Project Zhaka Jack-up Lift System Zhaka Jack-up Lift System-1		EPLAN Doc. No. 3ABDC230674 - 1.10
			ABB Ref. No.
			Resp. Dept.

Item Des.
= 1.10
+ 1.07.1

Rev. .1 Sheet 040d
Cont. 041a

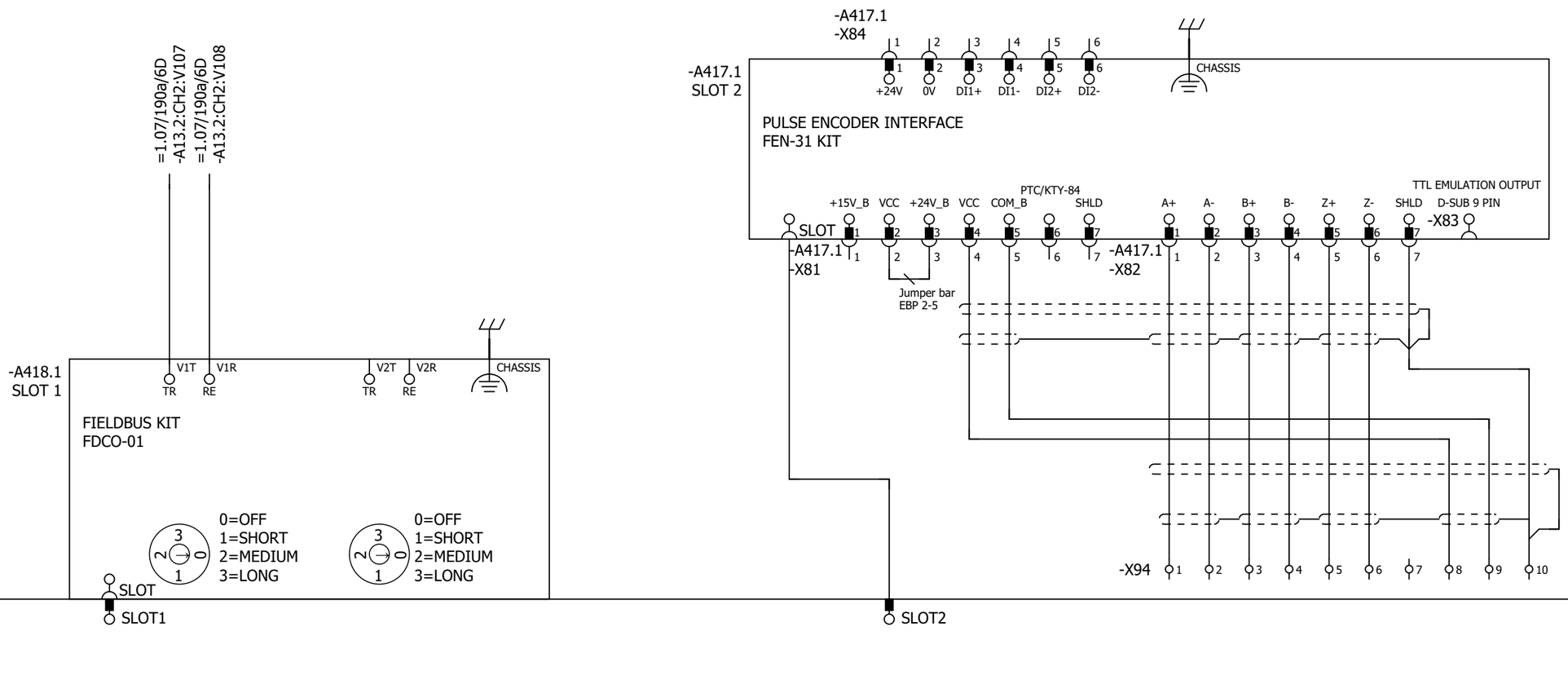

Cust. Doc. No.	Prep. Sky-Xin Zhang 02.08.2023	Title OPTION CARDS	Circuit diagram EFS2	Item Des.	
Cust. Ref. No.	App.	INV1.10	SAP Doc. No.	= 1.10	
Customer WMMP	Project Zhaka Jack-up Lift System	ACS880-107-0078A-3	EPLAN Doc. No. 3ABDC230674 - 1.10	+ 1.07.1	
	Zhaka Jack-up Lift System-1	400V	ABB Ref. No.	Rev. .1	Sheet 041a
			Resp. Dept.	Cont.	041b

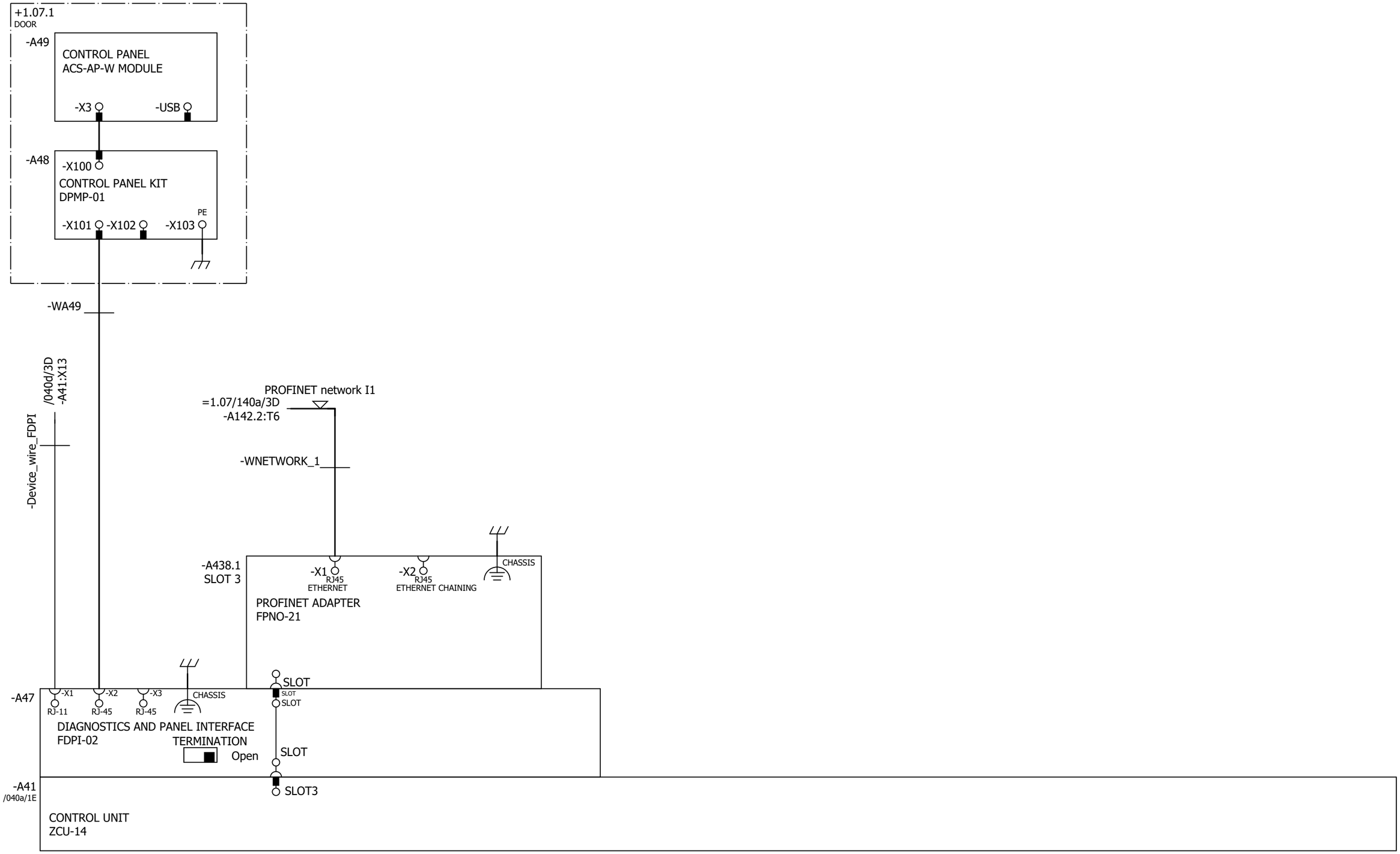

Cust. Doc. No.	Prep. Sky-Xin Zhang 02.08.2023	Title OPTION CARDS	Circuit diagram EFS2	Item Des.	
Cust. Ref. No.	App.	INV1.10	SAP Doc. No.	= 1.10	
Customer WMMP	Project Zhaka Jack-up Lift System	ACS880-107-0078A-3	EPLAN Doc. No. 3ABDC230674 - 1.10	+ 1.07.1	
		400V	ABB Ref. No.	Rev. .1	Sheet 041b
	Zhaka Jack-up Lift System-1		Resp. Dept.	Cont.	061a

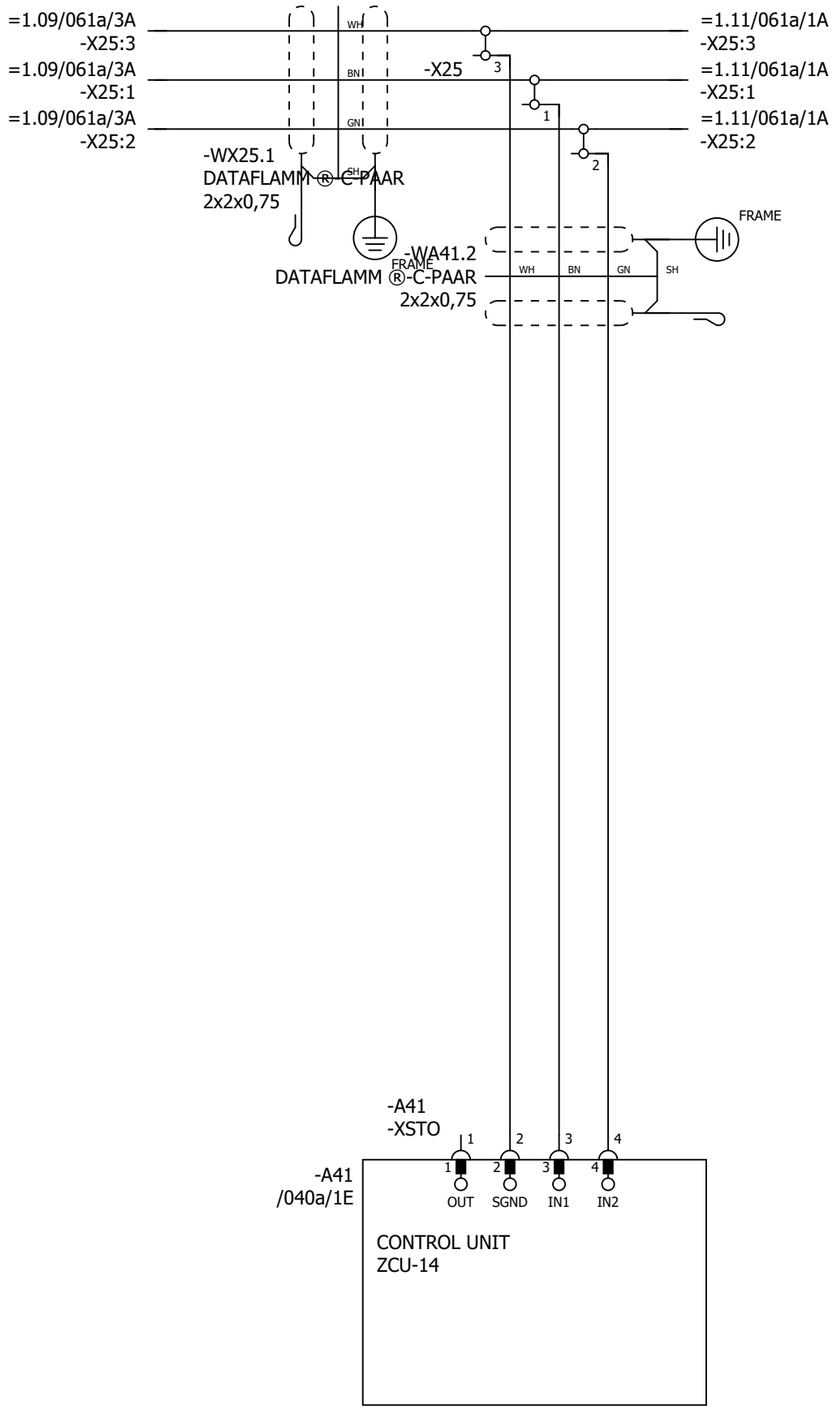

P345812 / 29711

SAFETY CIRCUIT
MACRO REVISION 6
RULES CONVERTED 19.7.2023

Cust. Doc. No.	Prep. Sky-Xin Zhang 02.08.2023	Title SAFETY CIRCUIT	Circuit diagram EFS2	Item Des.
Cust. Ref. No.	App.	INV1.10	SAP Doc. No.	= 1.10
Customer WMMP	Project Zhaka Jack-up Lift System	ACS880-107-0078A-3	EPLAN Doc. No. 3ABDC230674 - 1.10	+ 1.07.1
	Zhaka Jack-up Lift System-1	400V	ABB Ref. No.	Rev. .1 Sheet 061a
			Resp. Dept.	Cont. &MPC/Part list_1

Part list: 3ABDC230674DU01010

Item	Sort String	Qty.Str	Unit	Component Number	Description and text	Technical data
0010		1.000	ST		ACS880-107-0078A-3+A012+B053+C121+C132+	
0020		1.000	ST		_C206+E210+F272+F287+F288+G300+G307+G315	
0030		1.000	ST		_+G320+G330+G344+H352+H367+J400+K492+L50	
0040		1.000	ST		_2+L503+P913+Q964	
0050		1.000	ST		=1.10	
0060		1.000	ST		+1.07.1,INU3	
0070		1.000	ST		Powerconversionequipment	
0080	-A41_MEM	1.000	PC	3AXD50000006010	MEMORY UNIT KIT ZMU-02	
0090	-T11	1.000	PC	3AUA0000120009-M	ACS880-104-0078A-3+P922	+P922
0100	SCREW	1.000	PC	3AFE68681481	SCREW K30X10 TORX	PT WN1452 ZN
0110	SOFTWARE	1.000	PC	3AUA0000153462	SOFTWARE PRIMARY CONTROL PROGRA	AINF6 FOR ZCU-12/14
0120		1.000	ST		R4imoduleDCfuse	
0130	-F11.1-2	2.000	PC	3AXD50000000219	FUSE FR27UQ69V160T/160A	6.921 CP URQ 27X60MM FERRULE;AR
0140		1.000	ST		R3i-R4imoduleDCfusebase	
0150	(-F11.1-2)	2.000	PC	3AUA0000089227	FUSE HOLDER FUSE BASE US271MI 150A	FUSE BASE US271MI 150A 800V
0160		1.000	ST		24VDCsupplyZCU	
0170	-WA41_1	1.000	PC	3AXD50000005218	WIRE HARNESS 24VDC SUPPLY X51 ZCU V	HALOGEN FREE;X51_A51
0180		1.000	ST		Rooffancontrol	
0190	-WA41_3	1.000	PC	3AXD50000002688	WIRE HARNESS FAN CONTROL MAIN WIRE	HALOGEN FREE;X208_X26.3
0200		1.000	ST		Bottomrowmodulewireharness	
0210	-WT11	1.000	PC	3AXD50000002418	WIRE HARNESS R4I FUSE_MODULE BR V2	HALOGEN FREE;MAIN CIRCUIT WIRE SET
0220		1.000	ST		Encoder	
0230	-A417.1	1.000	PC	3AFE68978955	COMMUNIC. ADAPTER FEN-31	FEN-31
0240		1.000	ST		Optionmodule	
0250	-A418.1	1.000	PC	3AUA0000107392	COMMUNIC. ADAPTER FDCO-01	
0260		1.000	ST		Controlpanel	
0270	-A47	1.000	PC	3AUA0000108650	FIELDBUS KIT FDPI-02	PANEL BUS ADAPTER
0280	-A48	1.000	PC	3AUA0000108878	CONTROL PANEL KIT DPMP-01	DPMP-01
0290	-A49	1.000	PC	3AXD50000025964	CONTROL PANEL ACS-AP-W MODULE	ASSISTANT PANEL WIRELESS CPU1
0300		1.000	ST		DCfusesupervision	
0310	-K11.1-2	2.000	PC	3AXD50000021313	RELAY DEK_REL_G24/21	250 V;6 A;COIL 24VDC
0320		1.000	ST		FieldBus	
0330	-A438.1	1.000	PC	3AXD50000192779	OPTION MODULE FPNO-21	PROFINET IO

P345812 / 29711

Cust. Doc. No.	Prep.	Title PART LIST INV1.10 ACS880-107-0078A-3 400V	Item Des. = 1.10 +
Cust. Ref. No.	App.		SAP Doc. No.
Customer WMMP	Project Zhaka Jack-up Lift System Zhaka Jack-up Lift System-1		EPLAN Doc. No. 3ABDC230674 - 1.10
			ABB Ref. No. / Rev. / Sheet Part list_1
			Resp. Dept. / Cont. Part list_2

Part list: 3ABDC230674DU01010

Item	Sort String	Qty.Str	Unit	Component Number	Description and text	Technical data
0340		1.000	ST		Supplementtorelay	
0350	(-K11.1)	1.000	PC	3AXD50000021312	TERMINAL BLOCK ST EB2_DIK_RD 2716693	2POLE, 6,15 MM PITCH;FOR DEK RELAYS

P345812 / 29711

Cust. Doc. No.	Prep.	Title PART LIST INV1.10 ACS880-107-0078A-3 400V	Item Des. = 1.10 +
Cust. Ref. No.	App.		SAP Doc. No.
Customer WMMP	Project Zhaka Jack-up Lift System Zhaka Jack-up Lift System-1		EPLAN Doc. No. 3ABDC230674 - 1.10
			ABB Ref. No. / Rev. / Sheet Part list_2
			Resp. Dept. / Cont. &EMA/1

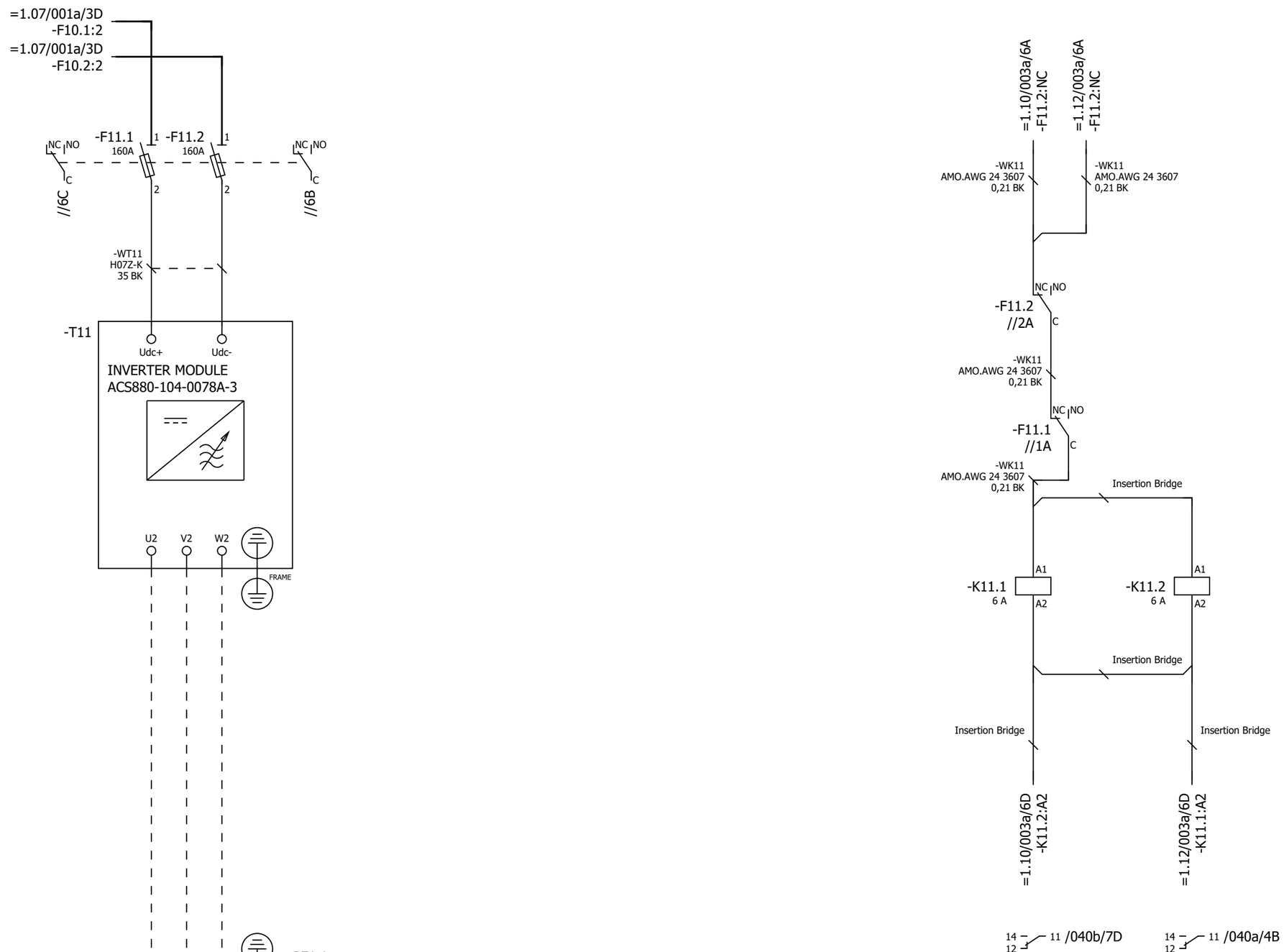

P345812 / 29711

Cust. Doc. No.	Prep. Sky-Xin Zhang 02.08.2023	Title MAIN CIRCUIT	Circuit diagram EFS2
Cust. Ref. No.	App.	INV1.11	SAP Doc. No.
Customer WMMP	Project Zhaka Jack-up Lift System	ACS880-107-0078A-3	EPLAN Doc. No. 3ABDC230674 - 1.11
	Zhaka Jack-up Lift System-1	400V	ABB Ref. No.
			Resp. Dept.

Item Des.
= 1.11
+ 1.07.1

Rev. .1 Sheet 003a
Cont. 040a

Control and status signals	Terminal	Pin
E-STOP FEEDBACK 1 - ESTOP ACTIVE	-XRO1	12
RUNNING 1 - RUNNING	-XRO2	22
FAULT (-1) 1 - NO FAULT	-XRO3	32

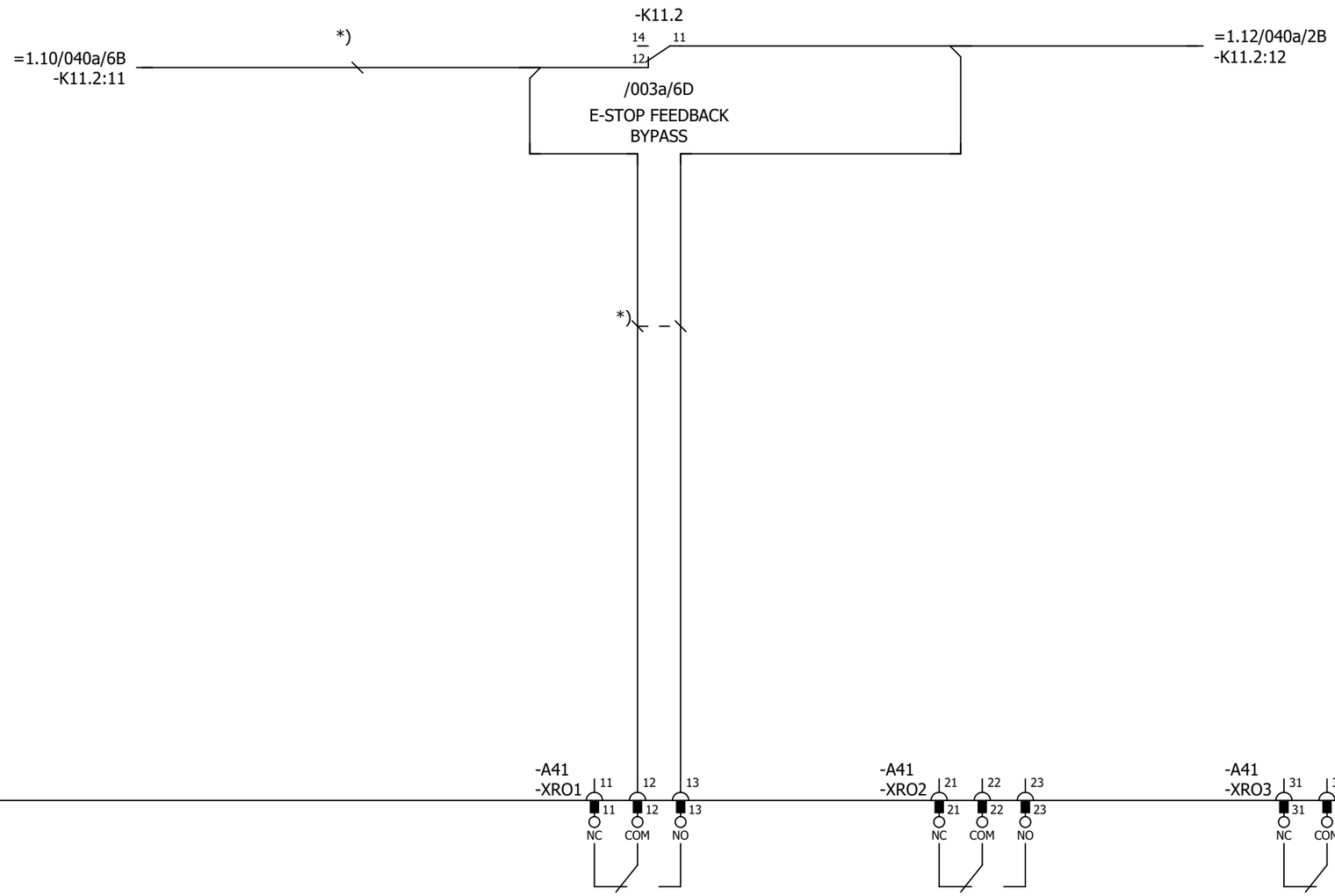

-A41
=1.07/026b/3C
/040b/1E
/040c/1A
/040d/1D
/041a/1E
/041b/1E
/061a/2E

CONTROL UNIT
ZCU-14

P345812 / 29711

Cust. Doc. No.	Prep. Sky-Xin Zhang 02.08.2023	Title CONTROL BOARD INV1.11 ACS880-107-0078A-3 400V	Circuit diagram EFS2
Cust. Ref. No.	App.		SAP Doc. No.
Customer WMMP	Project Zhaka Jack-up Lift System Zhaka Jack-up Lift System-1		EPLAN Doc. No. 3ABDC230674 - 1.11
			ABB Ref. No.
			Resp. Dept.

Item Des.
= 1.11
+ 1.07.1

Rev. .1 Sheet 040a
Cont. 040b

Control and status signals	Terminal	Pin
DIGITAL INTERLOCK	-XD24	1
START/STOP 1 - START	-XDI	1
FORWARD/REVERSE 1 - REVERSE	-XDI	2
RESET	-XDI	3
EMERGENCY STOP 0 - ACTIVE	-XDI	4
NOT SPECIFIED	-XDI	5
DI6 NOT IN USE	-XDI	6
OUTPUT: READY	-XDIO	1
OUTPUT: RUNNING	-XDIO	2

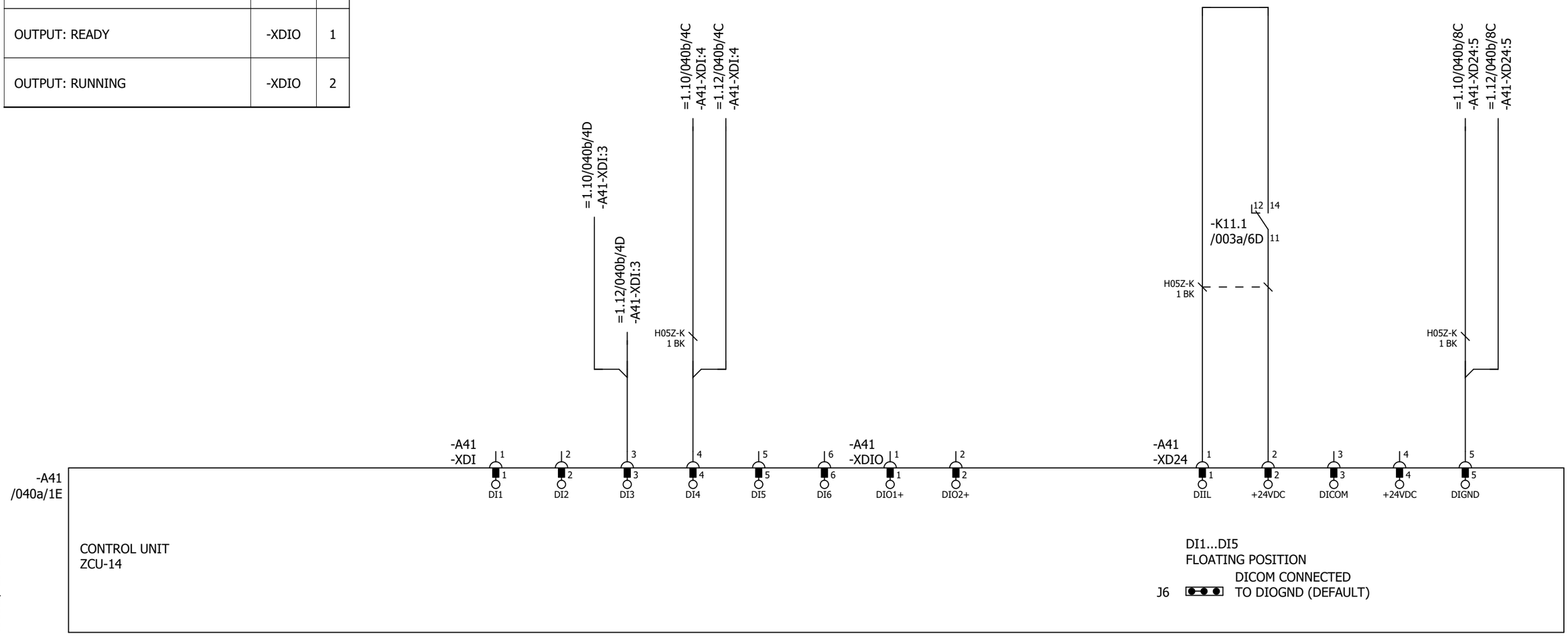

P345812 / 29711

Cust. Doc. No.	Prep. Sky-Xin Zhang 02.08.2023	Title CONTROL BOARD INV1.11 ACS880-107-0078A-3 400V	Circuit diagram EFS2
Cust. Ref. No.	App.		SAP Doc. No.
Customer WMMP	Project Zhaka Jack-up Lift System Zhaka Jack-up Lift System-1		EPLAN Doc. No. 3ABDC230674 - 1.11
			ABB Ref. No.
			Resp. Dept.

Item Des.	= 1.11 + 1.07.1
Rev. .1	Sheet 040b
Cont.	040c

Control and status signals	Terminal	Pin
MOTOR TEMP. MONITORING 0(2)…10V	-XAI	4
AI2 NOT SPECIFIED BY DEFAULT NOT IN USE 0(4)…20mA	-XAI	6
CURR SOU MOT TEMP MONIT 0(4)...20mA	-XAO	1
CURRENT 0(4)…20mA ↔ 0(4)…MOTOR CURRENT	-XAO	3

P345812 / 29711

Cust. Doc. No.	Prep. Sky-Xin Zhang 02.08.2023	Title CONTROL BOARD INV1.11 ACS880-107-0078A-3 400V	Circuit diagram EFS2
Cust. Ref. No.	App.		SAP Doc. No.
Customer WMMP	Project Zhaka Jack-up Lift System Zhaka Jack-up Lift System-1		EPLAN Doc. No. 3ABDC230674 - 1.11
			ABB Ref. No.
			Resp. Dept.

Item Des.
= 1.11
+ 1.07.1

Rev. .1 Sheet 040c
Cont. 040d

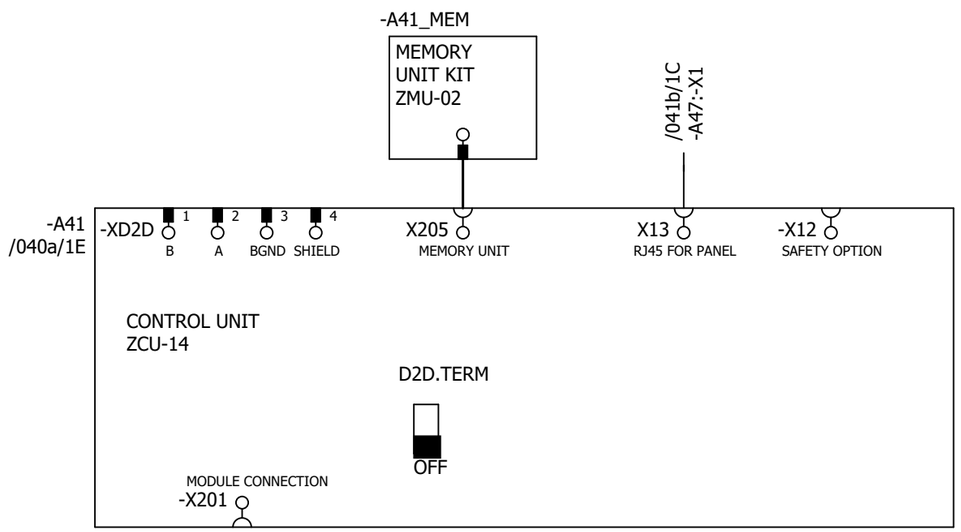

P345812 / 29711

Cust. Doc. No.	Prep. Sky-Xin Zhang 02.08.2023	Title CONTROL BOARD INV1.11 ACS880-107-0078A-3 400V	Circuit diagram EFS2
Cust. Ref. No.	App.		SAP Doc. No.
Customer WMMP	Project Zhaka Jack-up Lift System Zhaka Jack-up Lift System-1		EPLAN Doc. No. 3ABDC230674 - 1.11
			ABB Ref. No.
			Resp. Dept.

Item Des.
= 1.11
+ 1.07.1

Rev. .1 Sheet 040d
Cont. 041a

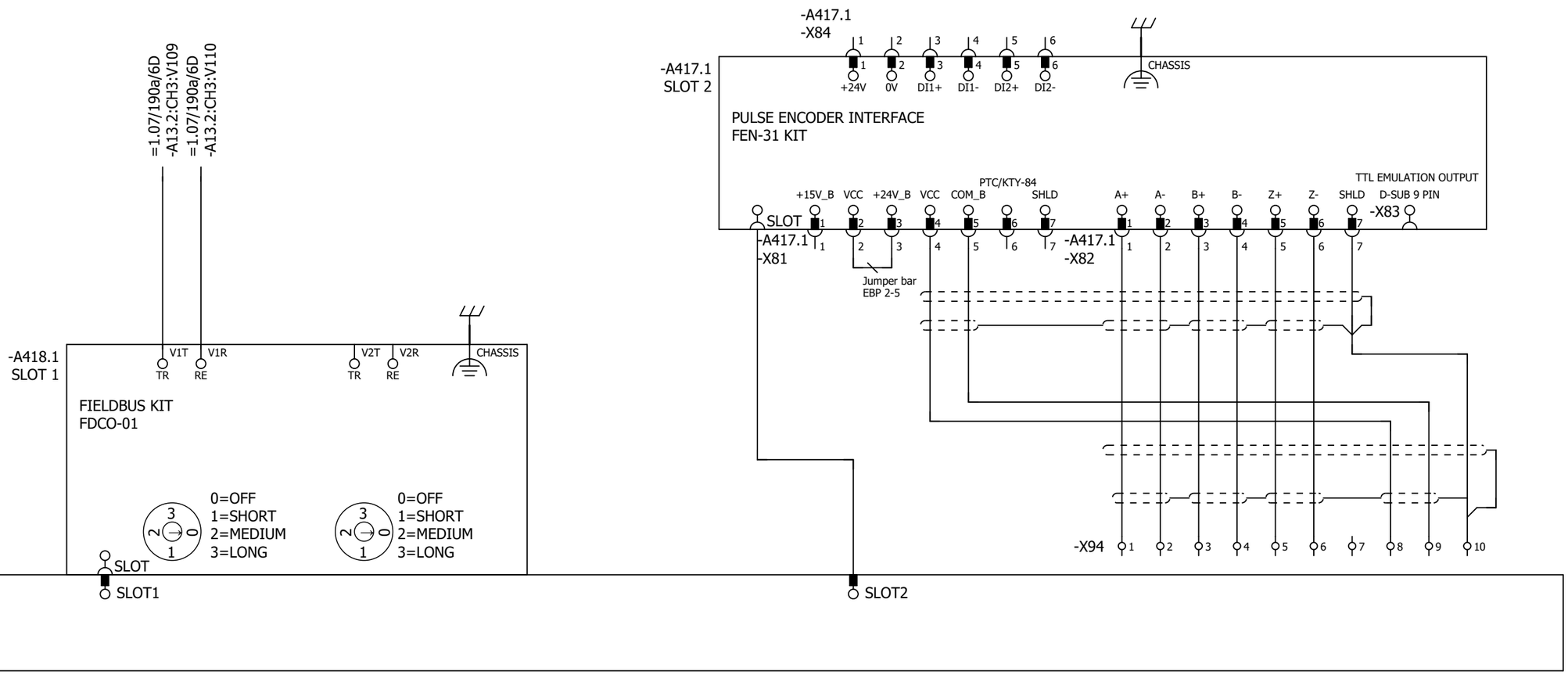

Cust. Doc. No.	Prep. Sky-Xin Zhang 02.08.2023	Title OPTION CARDS	Circuit diagram EFS2	Item Des.	
Cust. Ref. No.	App.	INV1.11	SAP Doc. No.	= 1.11	
Customer WMMP	Project Zhaka Jack-up Lift System	ACS880-107-0078A-3	EPLAN Doc. No. 3ABDC230674 - 1.11	+ 1.07.1	
	Zhaka Jack-up Lift System-1	400V	ABB Ref. No.	Rev. .1	Sheet 041a
			Resp. Dept.	Cont.	041b

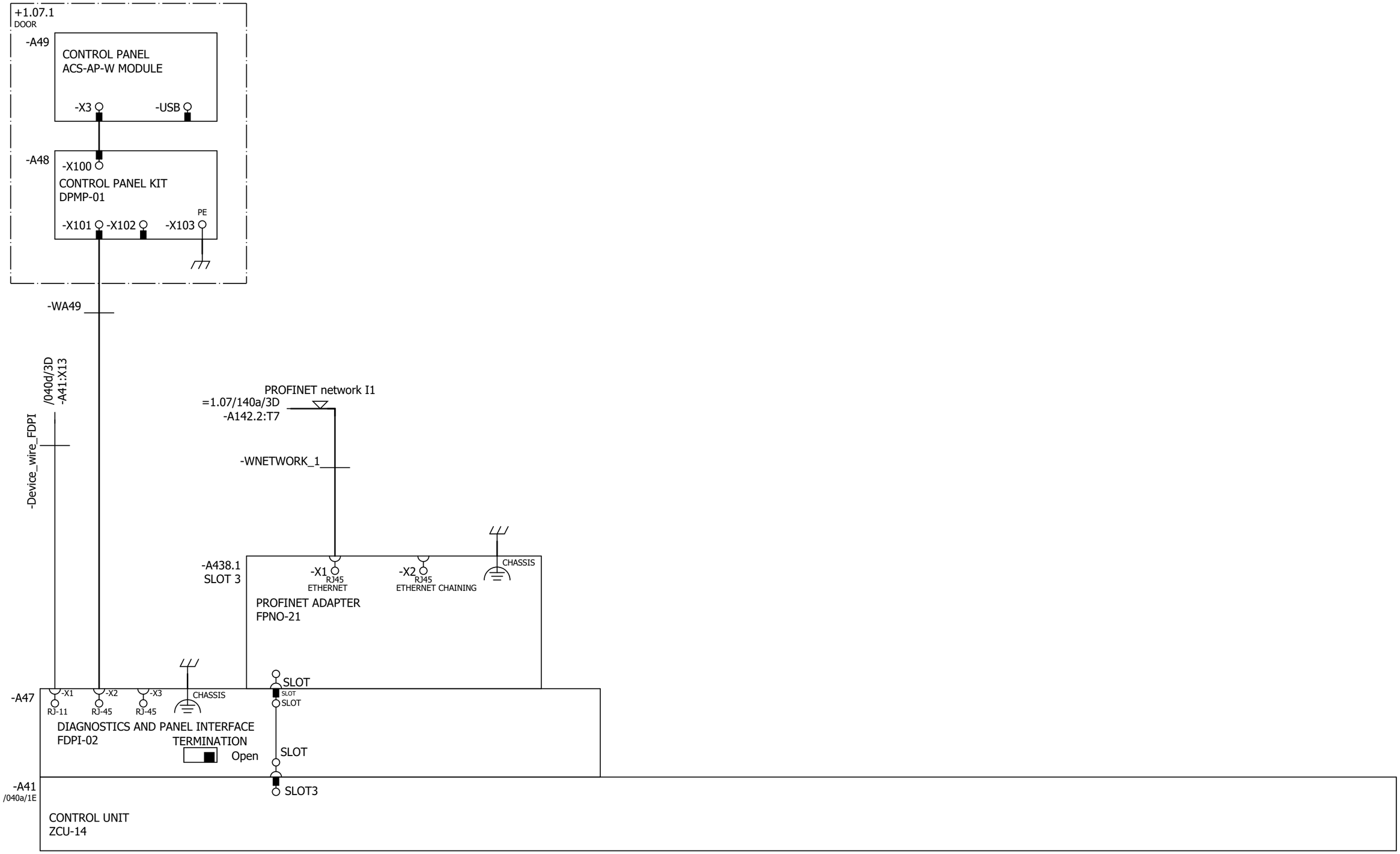

Cust. Doc. No.	Prep. Sky-Xin Zhang 02.08.2023	Title OPTION CARDS	Circuit diagram EFS2	Item Des.	
Cust. Ref. No.	App.	INV1.11	SAP Doc. No.	= 1.11	
Customer WMMP	Project Zhaka Jack-up Lift System	ACS880-107-0078A-3	EPLAN Doc. No. 3ABDC230674 - 1.11	+ 1.07.1	
		400V	ABB Ref. No.	Rev. .1	Sheet 041b
	Zhaka Jack-up Lift System-1		Resp. Dept.	Cont.	061a

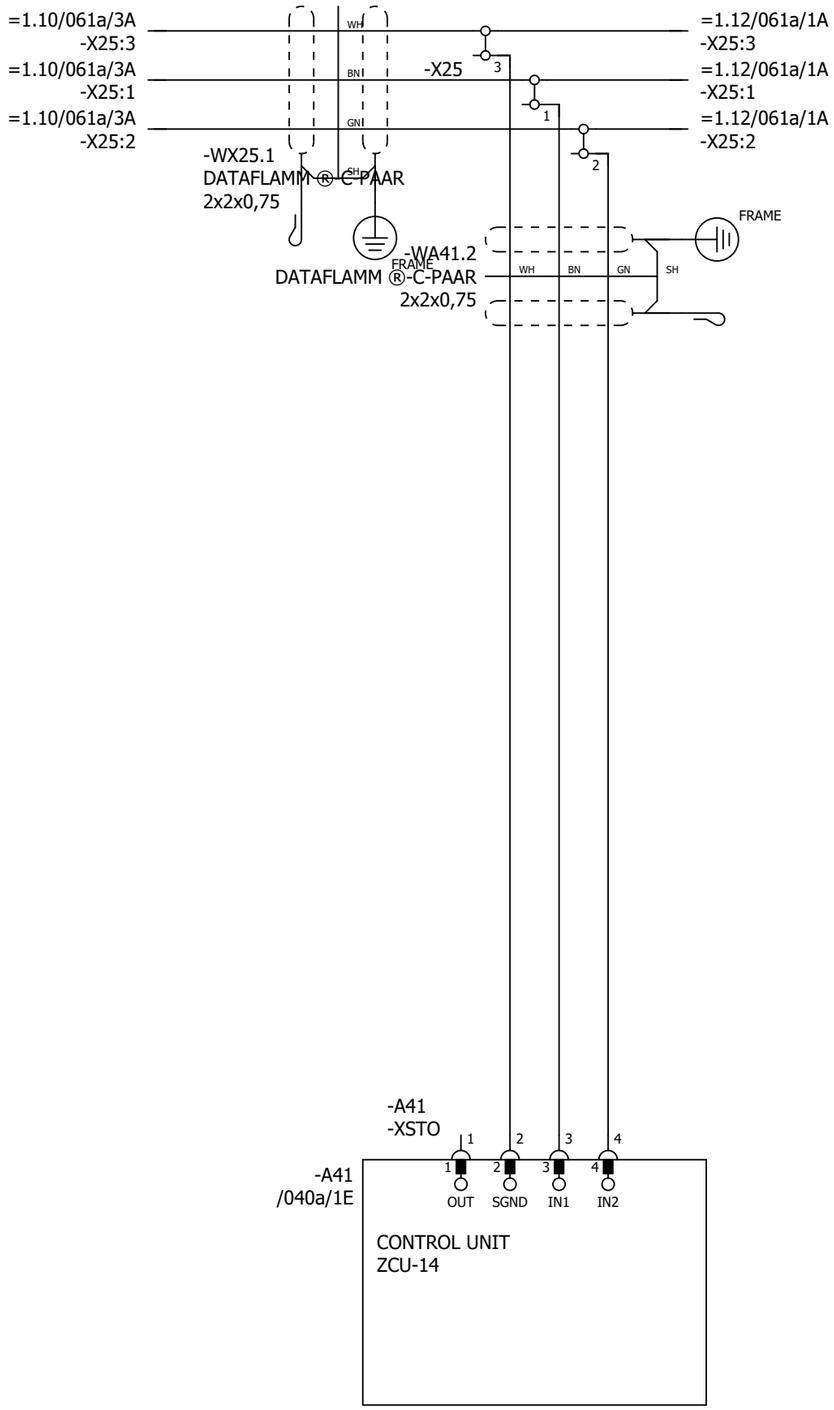

P345812 / 29711

SAFETY CIRCUIT
MACRO REVISION 6
RULES CONVERTED 19.7.2023

Cust. Doc. No.	Prep. Sky-Xin Zhang 02.08.2023	Title SAFETY CIRCUIT	Circuit diagram EFS2	Item Des.	
Cust. Ref. No.	App.	INV1.11	SAP Doc. No.	= 1.11	
Customer WMMP	Project Zhaka Jack-up Lift System	ACS880-107-0078A-3	EPLAN Doc. No. 3ABDC230674 - 1.11	+ 1.07.1	
	Zhaka Jack-up Lift System-1	400V	ABB Ref. No.	Rev. .1	Sheet 061a
			Resp. Dept.	Cont.	&MPC/Part list_1

Part list: 3ABDC230674DU01011

Item	Sort String	Qty.Str	Unit	Component Number	Description and text	Technical data
0010		1.000	ST		ACS880-107-0078A-3+A012+B053+C121+C132+	
0020		1.000	ST		_C206+E210+F272+F287+F288+G300+G307+G315	
0030		1.000	ST		_+G320+G330+G344+H352+H367+K450+K492+L50	
0040		1.000	ST		_2+L503+P913+Q964	
0050		1.000	ST		=1.11	
0060		1.000	ST		+1.07.1,INU3	
0070		1.000	ST		Powerconversionequipment	
0080	-A41_MEM	1.000	PC	3AXD50000006010	MEMORY UNIT KIT ZMU-02	
0090	-T11	1.000	PC	3AUA0000120009-M	ACS880-104-0078A-3+P922	+P922
0100	SCREW	1.000	PC	3AFE68681481	SCREW K30X10 TORX	PT WN1452 ZN
0110	SOFTWARE	1.000	PC	3AUA0000153462	SOFTWARE PRIMARY CONTROL PROGRA	AINF6 FOR ZCU-12/14
0120		1.000	ST		R4imoduleDCfuse	
0130	-F11.1-2	2.000	PC	3AXD50000000219	FUSE FR27UQ69V160T/160A	6.921 CP URQ 27X60MM FERRULE;AR
0140		1.000	ST		R3i-R4imoduleDCfusebase	
0150	(-F11.1-2)	2.000	PC	3AUA0000089227	FUSE HOLDER FUSE BASE US271MI 150A	FUSE BASE US271MI 150A 800V
0160		1.000	ST		24VDCsupplyZCU	
0170	-WA41_1	1.000	PC	3AXD50000005218	WIRE HARNESS 24VDC SUPPLY X51 ZCU V	HALOGEN FREE;X51_A51
0180		1.000	ST		Rooffancontrol	
0190	-WA41_3	1.000	PC	3AXD50000002688	WIRE HARNESS FAN CONTROL MAIN WIRE	HALOGEN FREE;X208_X26.3
0200		1.000	ST		Bottomrowmodulewireharness	
0210	-WT11	1.000	PC	3AXD50000002418	WIRE HARNESS R4I FUSE_MODULE BR V2	HALOGEN FREE;MAIN CIRCUIT WIRE SET
0220		1.000	ST		Encoder	
0230	-A417.1	1.000	PC	3AFE68978955	COMMUNIC. ADAPTER FEN-31	FEN-31
0240		1.000	ST		Optionmodule	
0250	-A418.1	1.000	PC	3AUA0000107392	COMMUNIC. ADAPTER FDCO-01	
0260		1.000	ST		Controlpanel	
0270	-A47	1.000	PC	3AUA0000108650	FIELDBUS KIT FDPI-02	PANEL BUS ADAPTER
0280		1.000	ST		DCfusesupervision	
0290	-K11.1-2	2.000	PC	3AXD50000021313	RELAY DEK_REL_G24/21	250 V;6 A;COIL 24VDC
0300		1.000	ST		FieldBus	
0310	-A438.1	1.000	PC	3AXD50000192779	OPTION MODULE FPNO-21	PROFINET IO
0320		1.000	ST		Supplementtorelay	
0330	(-K11.1)	1.000	PC	3AXD50000021312	TERMINAL BLOCK ST EB2_DIK_RD 2716693	2POLE, 6,15 MM PITCH;FOR DEK RELAYS

P345812 / 29711

Cust. Doc. No.	Prep.	Title PART LIST INV1.11 ACS880-107-0078A-3 400V	Item Des. = 1.11 +
Cust. Ref. No.	App.		SAP Doc. No.
Customer WMMP	Project Zhaka Jack-up Lift System Zhaka Jack-up Lift System-1		EPLAN Doc. No. 3ABDC230674 - 1.11
			ABB Ref. No. / Rev. / Sheet Part list_1
			Resp. Dept. / Cont. &EMA/1

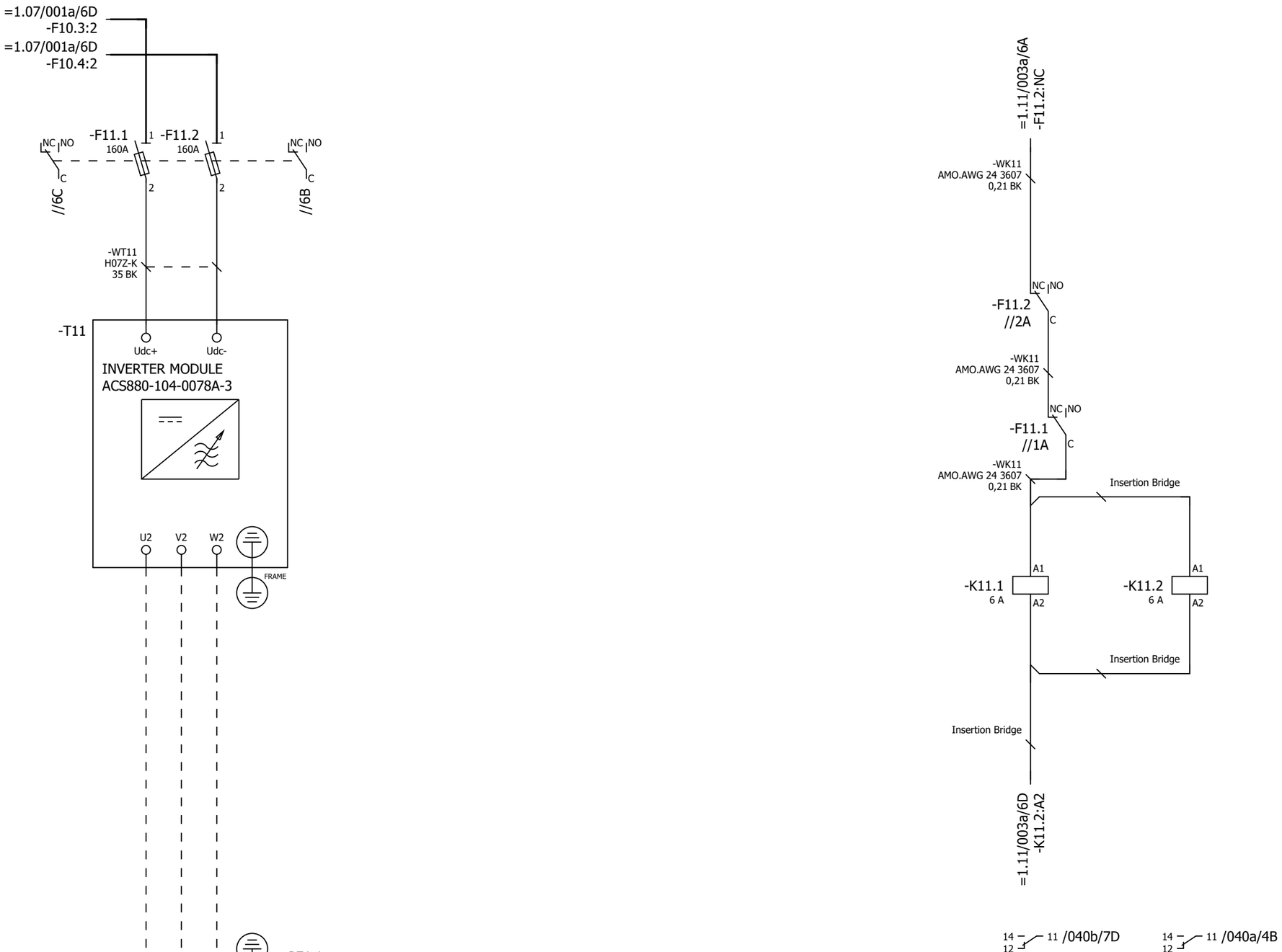

P345812 / 29711

Cust. Doc. No.	Prep. Sky-Xin Zhang 02.08.2023	Title MAIN CIRCUIT	Circuit diagram EFS2
Cust. Ref. No.	App.	INV1.12	SAP Doc. No.
Customer WMMP	Project Zhaka Jack-up Lift System	ACS880-107-0078A-3	EPLAN Doc. No. 3ABDC230674 - 1.12
	Zhaka Jack-up Lift System-1	400V	ABB Ref. No.
			Resp. Dept.

Item Des.
= 1.12
+ 1.07.1

Rev. .1 Sheet 003a
Cont. 040a

Control and status signals	Terminal	Pin
E-STOP FEEDBACK 1 - ESTOP ACTIVE	-XRO1	12
RUNNING 1 - RUNNING	-XRO2	22
FAULT (-1) 1 - NO FAULT	-XRO3	32

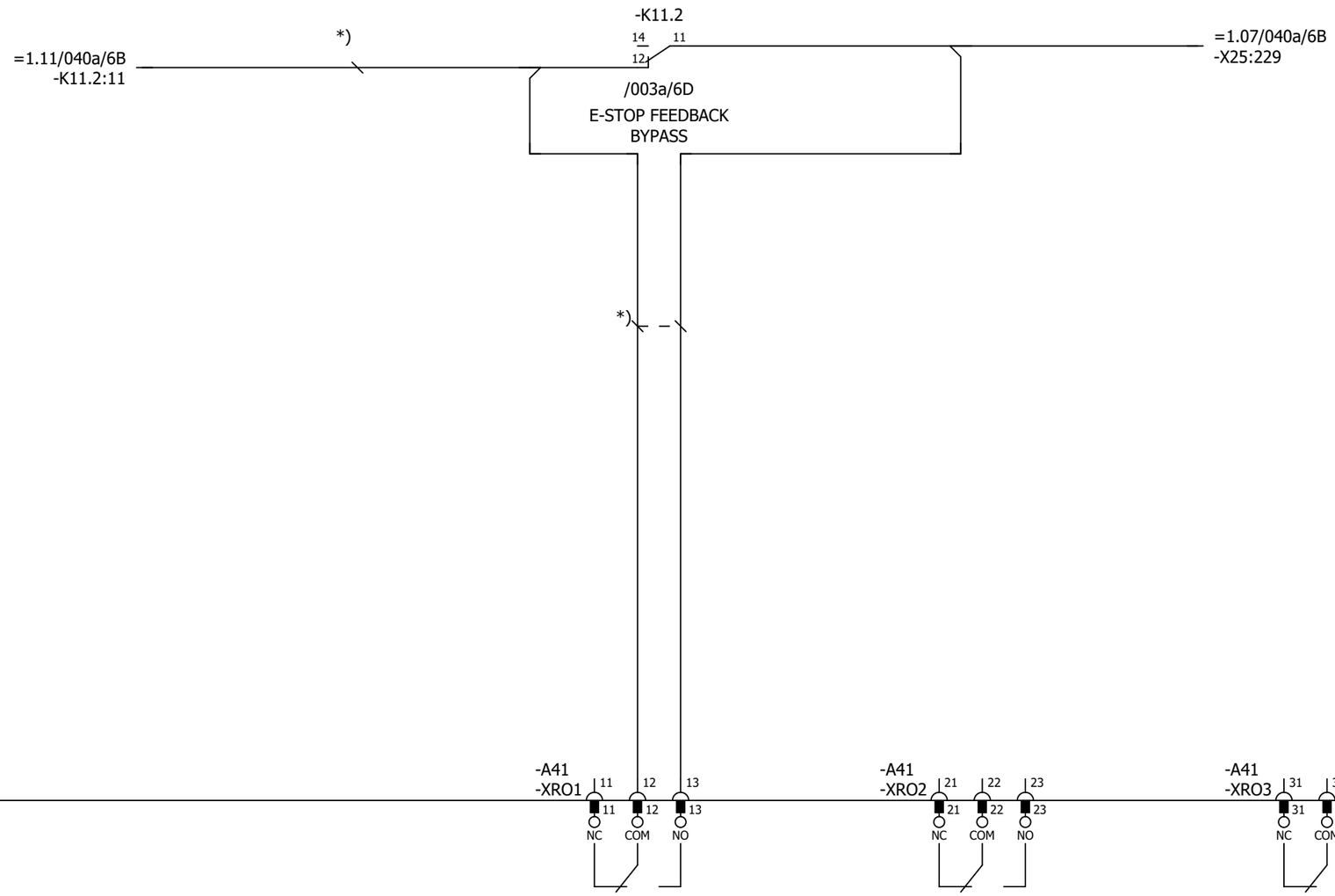

Cust. Doc. No.	Prep. Sky-Xin Zhang 02.08.2023	Title CONTROL BOARD INV1.12 ACS880-107-0078A-3 400V	Circuit diagram EFS2
Cust. Ref. No.	App.		SAP Doc. No.
Customer WMMP	Project Zhaka Jack-up Lift System Zhaka Jack-up Lift System-1		EPLAN Doc. No. 3ABDC230674 - 1.12
			ABB Ref. No.
			Resp. Dept.

Item Des.
= 1.12
+ 1.07.1

Rev. .1 Sheet 040a
Cont. 040b

Control and status signals	Terminal	Pin
DIGITAL INTERLOCK	-XD24	1
START/STOP 1 - START	-XDI	1
FORWARD/REVERSE 1 - REVERSE	-XDI	2
RESET	-XDI	3
EMERGENCY STOP 0 - ACTIVE	-XDI	4
NOT SPECIFIED	-XDI	5
DI6 NOT IN USE	-XDI	6
OUTPUT: READY	-XDIO	1
OUTPUT: RUNNING	-XDIO	2

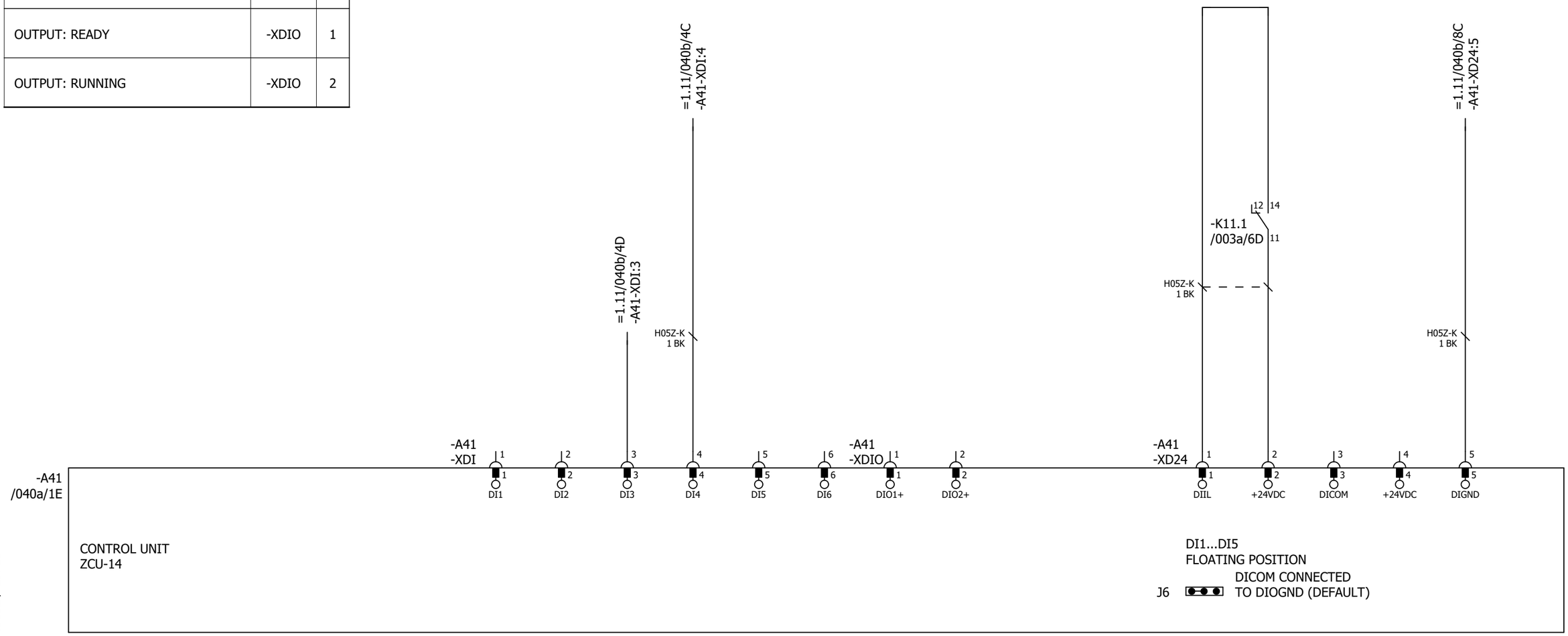

P345812 / 29711

Cust. Doc. No.	Prep. Sky-Xin Zhang 02.08.2023	Title CONTROL BOARD INV1.12 ACS880-107-0078A-3 400V	Circuit diagram EFS2
Cust. Ref. No.	App.		SAP Doc. No.
Customer WMMP	Project Zhaka Jack-up Lift System Zhaka Jack-up Lift System-1		EPLAN Doc. No. 3ABDC230674 - 1.12
			ABB Ref. No.
			Resp. Dept.

Item Des.
= 1.12
+ 1.07.1

Rev. .1 Sheet 040b
Cont. 040c

Control and status signals	Terminal	Pin
MOTOR TEMP. MONITORING 0(2)…10V	-XAI	4
AI2 NOT SPECIFIED BY DEFAULT NOT IN USE 0(4)…20mA	-XAI	6
CURR SOU MOT TEMP MONIT 0(4)...20mA	-XAO	1
CURRENT 0(4)…20mA ↔ 0(4)…MOTOR CURRENT	-XAO	3

P345812 / 29711

Cust. Doc. No.	Prep. Sky-Xin Zhang 02.08.2023	Title CONTROL BOARD INV1.12 ACS880-107-0078A-3 400V	Circuit diagram EFS2
Cust. Ref. No.	App.		SAP Doc. No.
Customer WMMP	Project Zhaka Jack-up Lift System Zhaka Jack-up Lift System-1		EPLAN Doc. No. 3ABDC230674 - 1.12
			ABB Ref. No.
			Resp. Dept.

Item Des.
= 1.12
+ 1.07.1

Rev. .1 Sheet 040c
Cont. 040d

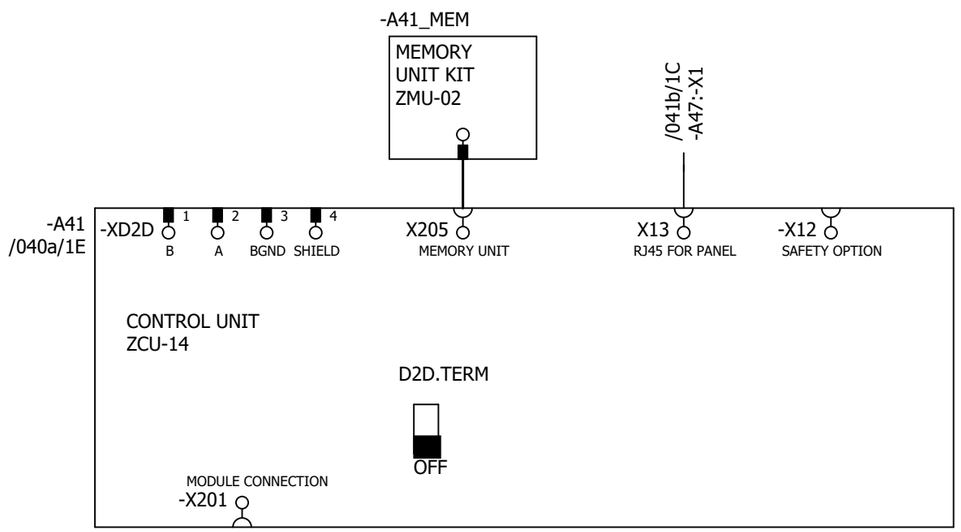

P345812 / 29711

Cust. Doc. No.	Prep. Sky-Xin Zhang 02.08.2023	Title CONTROL BOARD INV1.12 ACS880-107-0078A-3 400V	Circuit diagram EFS2
Cust. Ref. No.	App.		SAP Doc. No.
Customer WMMP	Project Zhaka Jack-up Lift System Zhaka Jack-up Lift System-1		EPLAN Doc. No. 3ABDC230674 - 1.12
			ABB Ref. No.
			Resp. Dept.

Item Des.
= 1.12
+ 1.07.1

Rev. .1 Sheet 040d
Cont. 041a

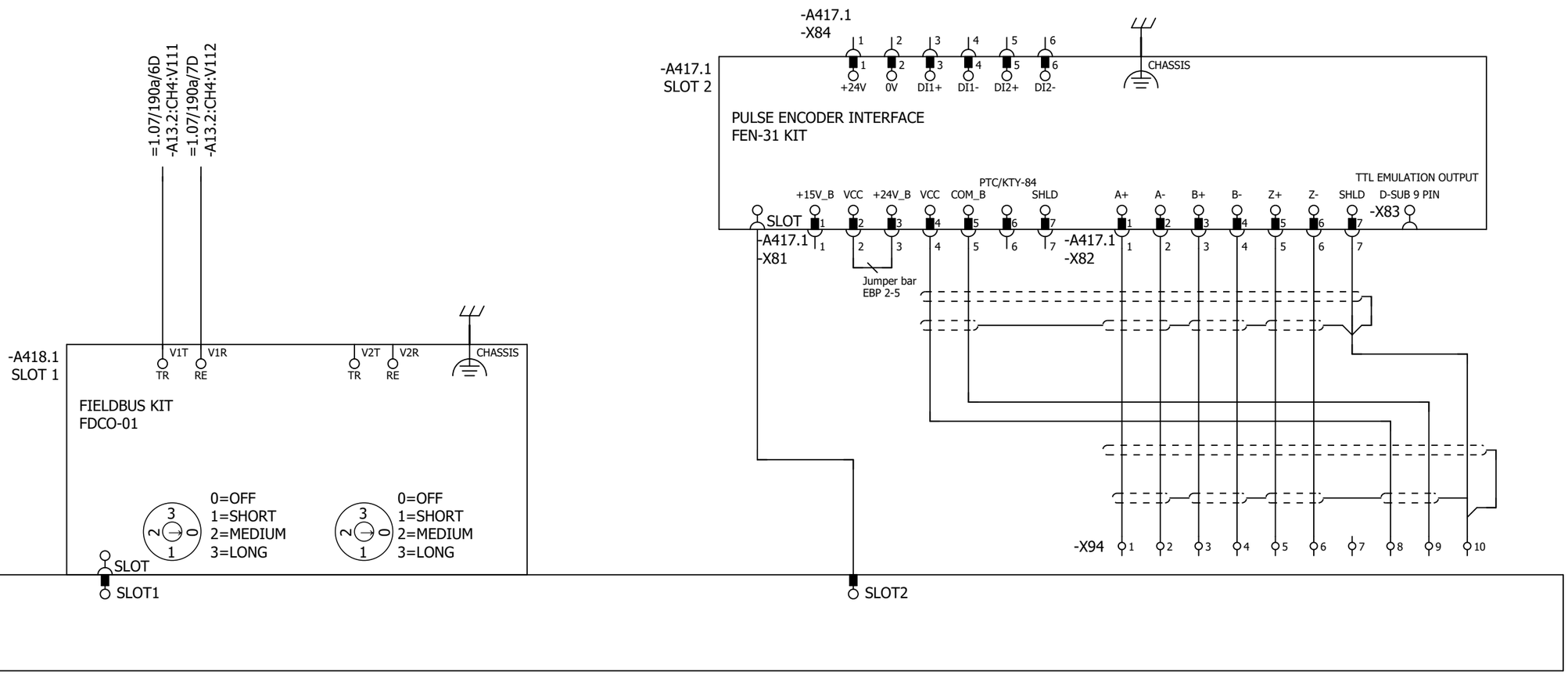

Cust. Doc. No.	Prep. Sky-Xin Zhang 02.08.2023	Title OPTION CARDS	Circuit diagram EFS2	Item Des.	
Cust. Ref. No.	App.	INV1.12	SAP Doc. No.	= 1.12	
Customer WMMP	Project Zhaka Jack-up Lift System	ACS880-107-0078A-3	EPLAN Doc. No. 3ABDC230674 - 1.12	+ 1.07.1	
	Zhaka Jack-up Lift System-1	400V	ABB Ref. No.	Rev. .1	Sheet 041a
			Resp. Dept.	Cont.	041b

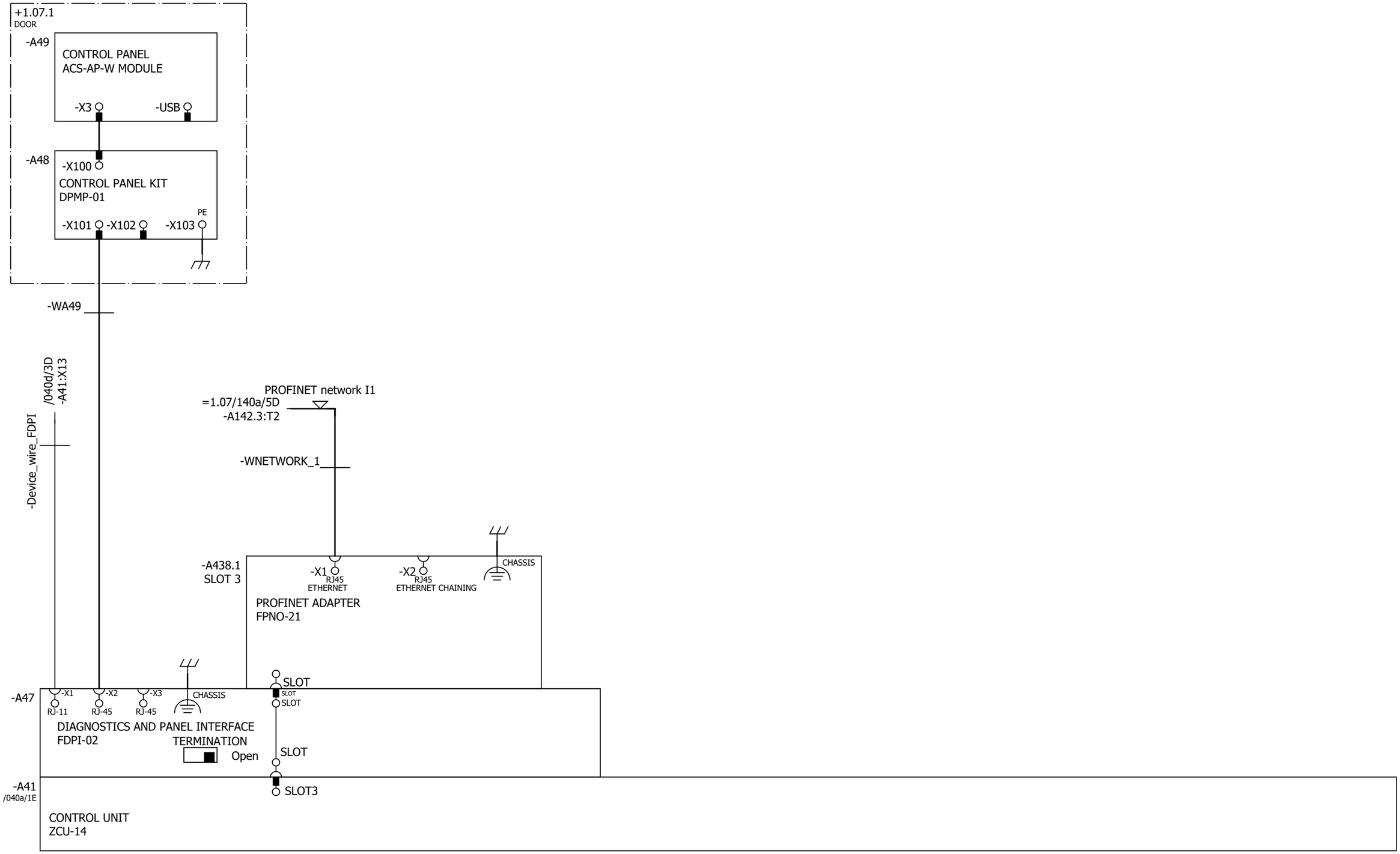

Cust. Doc. No.	Prep. Sky-Xin Zhang 02.08.2023	Title OPTION CARDS	Circuit diagram EFS2	Item Des.	
Cust. Ref. No.	App.	INV1.12	SAP Doc. No.	= 1.12	
Customer WMMP	Project Zhaka Jack-up Lift System	ACS880-107-0078A-3	EPLAN Doc. No. 3ABDC230674 - 1.12	+ 1.07.1	
		400V	ABB Ref. No.	Rev. .1	Sheet 041b
	Zhaka Jack-up Lift System-1		Resp. Dept.	Cont.	061a

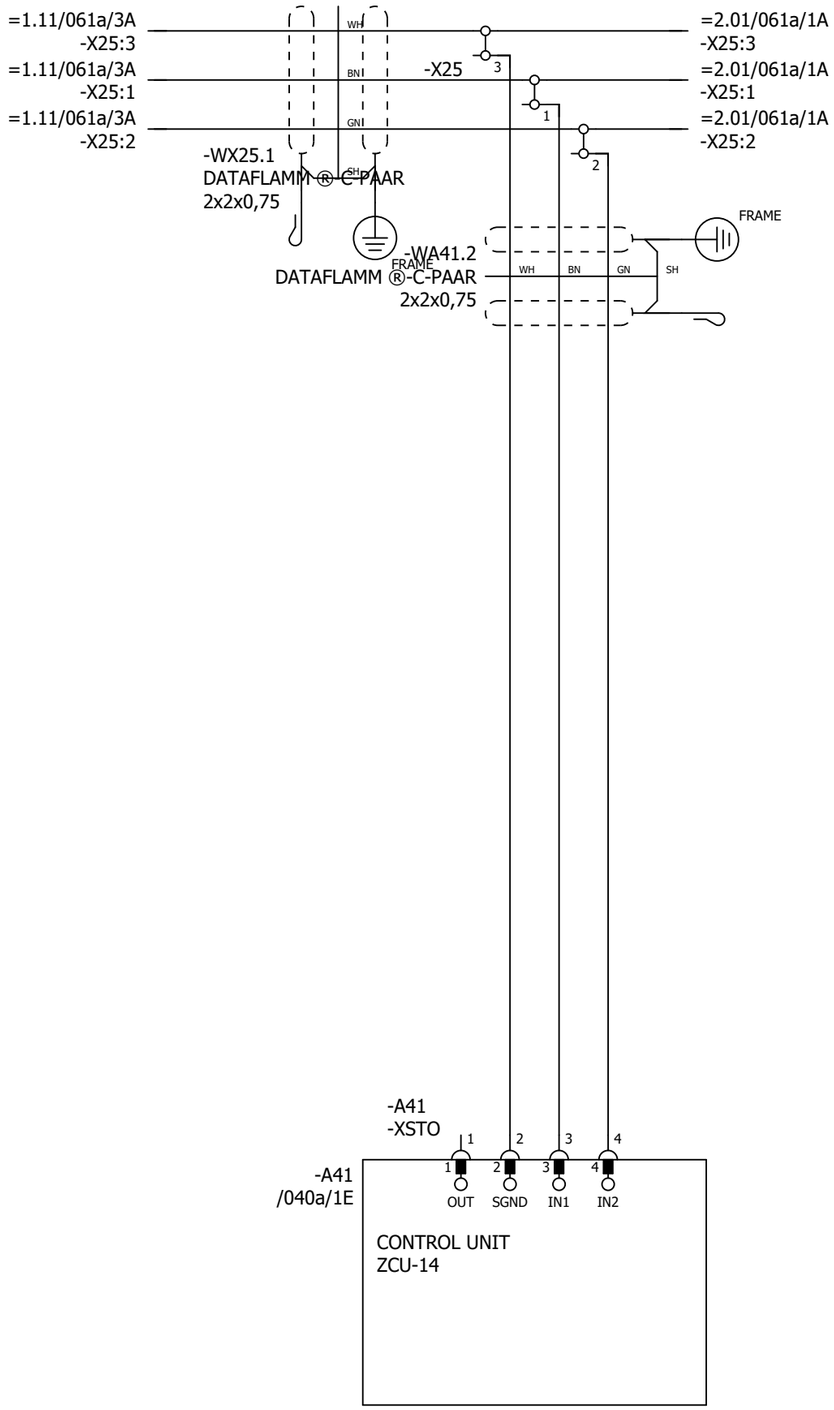

P345812 / 29711

SAFETY CIRCUIT
MACRO REVISION 6
RULES CONVERTED 19.7.2023

Cust. Doc. No.	Prep. Sky-Xin Zhang 02.08.2023	Title SAFETY CIRCUIT	Circuit diagram EFS2	Item Des.	
Cust. Ref. No.	App.	INV1.12	SAP Doc. No.	= 1.12	
Customer WMMP	Project Zhaka Jack-up Lift System	ACS880-107-0078A-3	EPLAN Doc. No. 3ABDC230674 - 1.12	+ 1.07.1	
	Zhaka Jack-up Lift System-1	400V	ABB Ref. No.	Rev. .1	Sheet 061a
			Resp. Dept.	Cont.	&MPC/Part list_1

Part list: 3ABDC230674DU01012

Item	Sort String	Qty.Str	Unit	Component Number	Description and text	Technical data
0010		1.000	ST		ACS880-107-0078A-3+A012+B053+C121+C132+	
0020		1.000	ST		_C206+E210+F272+F287+F288+G300+G307+G315	
0030		1.000	ST		_+G320+G330+G344+H352+H367+K450+K492+L50	
0040		1.000	ST		_2+L503+P913+Q964	
0050		1.000	ST		=1.12	
0060		1.000	ST		+1.07.1,INU3	
0070		1.000	ST		Powerconversionequipment	
0080	-A41_MEM	1.000	PC	3AXD50000006010	MEMORY UNIT KIT ZMU-02	
0090	-T11	1.000	PC	3AUA0000120009-M	ACS880-104-0078A-3+P922	+P922
0100	SCREW	1.000	PC	3AFE68681481	SCREW K30X10 TORX	PT WN1452 ZN
0110	SOFTWARE	1.000	PC	3AUA0000153462	SOFTWARE PRIMARY CONTROL PROGRA	AINF6 FOR ZCU-12/14
0120		1.000	ST		R4imoduleDCfuse	
0130	-F11.1-2	2.000	PC	3AXD50000000219	FUSE FR27UQ69V160T/160A	6.921 CP URQ 27X60MM FERRULE;AR
0140		1.000	ST		R3i-R4imoduleDCfusebase	
0150	(-F11.1-2)	2.000	PC	3AUA0000089227	FUSE HOLDER FUSE BASE US271MI 150A	FUSE BASE US271MI 150A 800V
0160		1.000	ST		24VDCsupplyZCU	
0170	-WA41_1	1.000	PC	3AXD50000005218	WIRE HARNESS 24VDC SUPPLY X51 ZCU V	HALOGEN FREE;X51_A51
0180		1.000	ST		Rooffancontrol	
0190	-WA41_3	1.000	PC	3AXD50000002688	WIRE HARNESS FAN CONTROL MAIN WIRE	HALOGEN FREE;X208_X26.3
0200		1.000	ST		Bottomrowmodulewireharness	
0210	-WT11	1.000	PC	3AXD50000002418	WIRE HARNESS R4I FUSE_MODULE BR V2	HALOGEN FREE;MAIN CIRCUIT WIRE SET
0220		1.000	ST		Encoder	
0230	-A417.1	1.000	PC	3AFE68978955	COMMUNIC. ADAPTER FEN-31	FEN-31
0240		1.000	ST		Optionmodule	
0250	-A418.1	1.000	PC	3AUA0000107392	COMMUNIC. ADAPTER FDCO-01	
0260		1.000	ST		Controlpanel	
0270	-A47	1.000	PC	3AUA0000108650	FIELDBUS KIT FDPI-02	PANEL BUS ADAPTER
0280		1.000	ST		DCfusesupervision	
0290	-K11.1-2	2.000	PC	3AXD50000021313	RELAY DEK_REL_G24/21	250 V;6 A;COIL 24VDC
0300		1.000	ST		FieldBus	
0310	-A438.1	1.000	PC	3AXD50000192779	OPTION MODULE FPNO-21	PROFINET IO
0320		1.000	ST		Supplementtorelay	
0330	(-K11.1)	1.000	PC	3AXD50000021312	TERMINAL BLOCK ST EB2_DIK_RD 2716693	2POLE, 6,15 MM PITCH;FOR DEK RELAYS

P345812 / 29711

Cust. Doc. No.	Prep.	Title PART LIST INV1.12 ACS880-107-0078A-3 400V	Item Des. = 1.12 +
Cust. Ref. No.	App.		SAP Doc. No.
Customer WMMP	Project Zhaka Jack-up Lift System Zhaka Jack-up Lift System-1		EPLAN Doc. No. 3ABDC230674 - 1.12
			ABB Ref. No. / Rev. / Sheet Part list_1
			Resp. Dept. / Cont. Part list_2

Part list: 3ABDC230674DU01012

Item	Sort String	Qty.Str	Unit	Component Number	Description and text	Technical data
0340		1.000	ST		+1.07.2,JNU	

P345812 / 29711

Cust. Doc. No.	Prep.	Title PART LIST INV1.12 ACS880-107-0078A-3 400V		Item Des. = 1.12 +
Cust. Ref. No.	App.		SAP Doc. No.	
Customer WMMP	Project Zhaka Jack-up Lift System Zhaka Jack-up Lift System-1		EPLAN Doc. No. 3ABDC230674 - 1.12	
			ABB Ref. No.	Rev. / Sheet Part list_2
			Resp. Dept.	Cont. &EMA/1

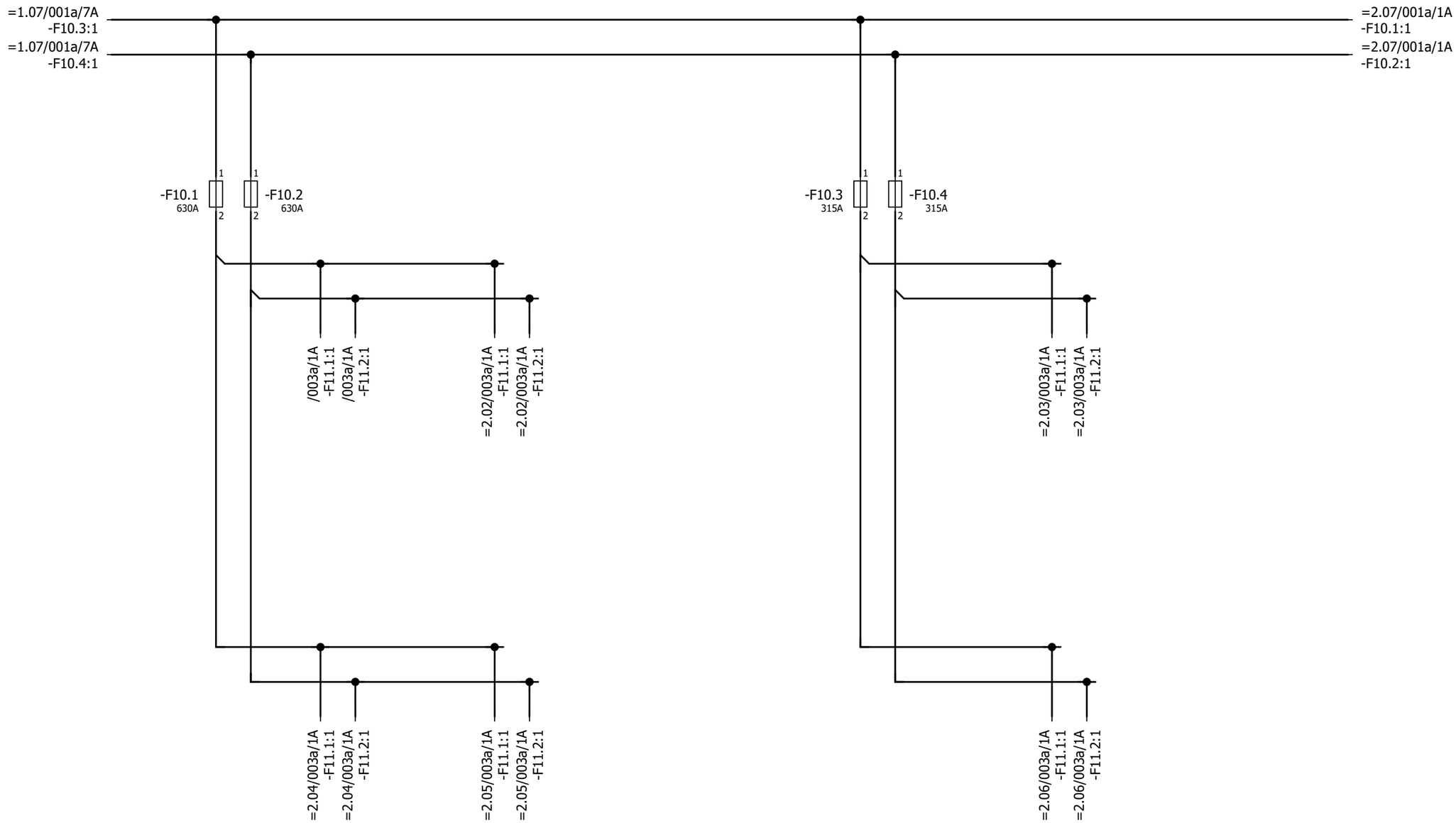

P345812 / 29711

Cust. Doc. No.	Prep. Sky-Xin Zhang 02.08.2023	Title MAIN CIRCUIT	Circuit diagram EFS2
Cust. Ref. No.	App.	INV2.01	SAP Doc. No.
Customer WMMP	Project Zhaka Jack-up Lift System	ACS880-107-0078A-3	EPLAN Doc. No. 3ABDC230674 - 2.01
	Zhaka Jack-up Lift System-1	400V	ABB Ref. No.
			Resp. Dept.

Item Des.
= 2.01
+ 2.01.1

Rev. .1 Sheet 001a
Cont. 003a

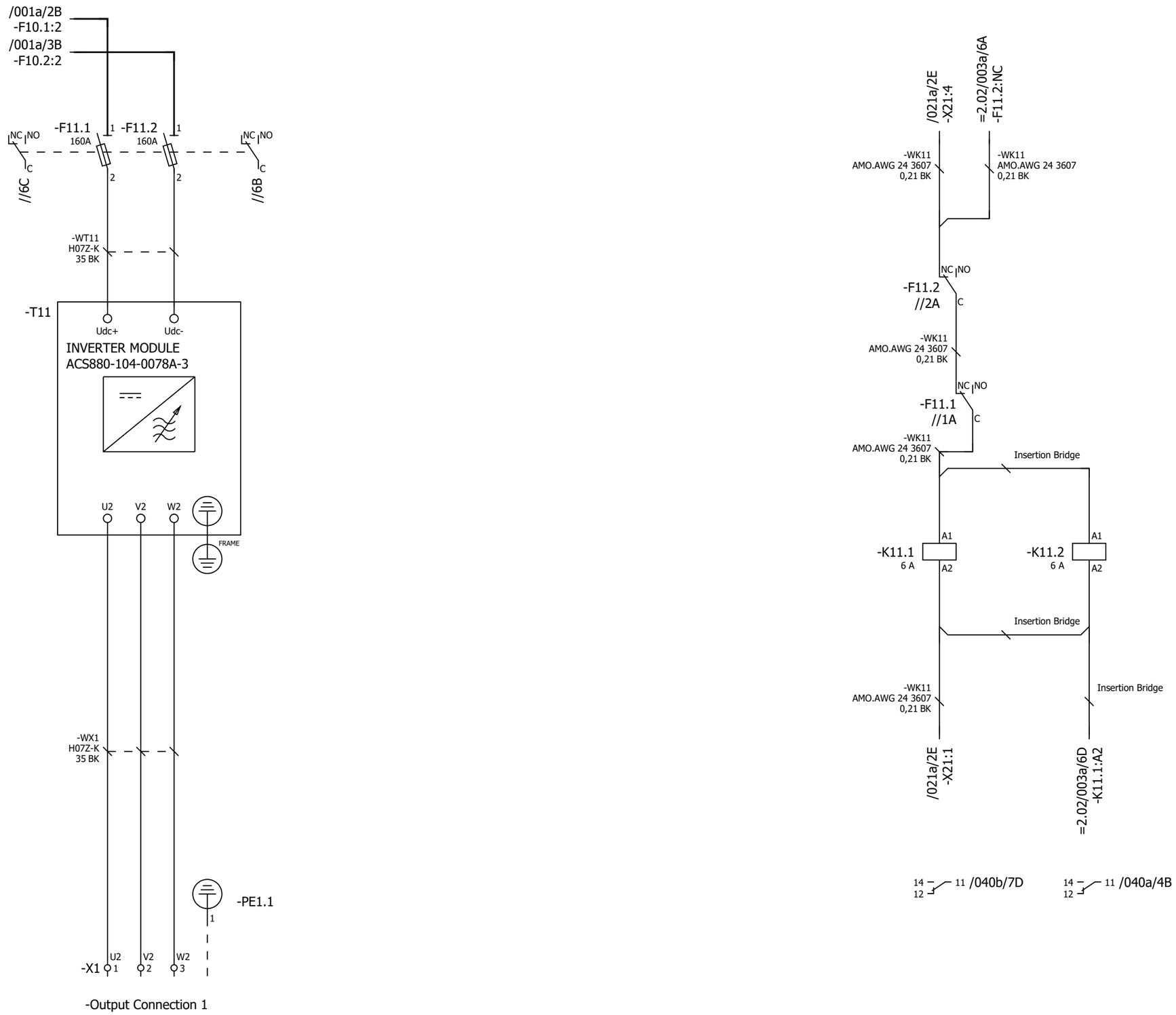

P345812 / 29711

Cust. Doc. No.	Prep. Sky-Xin Zhang 02.08.2023	Title MAIN CIRCUIT	Circuit diagram EFS2
Cust. Ref. No.	App.	INV2.01	SAP Doc. No.
Customer WMMP	Project Zhaka Jack-up Lift System	ACS880-107-0078A-3	EPLAN Doc. No. 3ABDC230674 - 2.01
	Zhaka Jack-up Lift System-1	400V	ABB Ref. No.
			Resp. Dept.

Item Des.
= 2.01
+ 2.01.1

Rev. .1 Sheet 003a
Cont. 013a

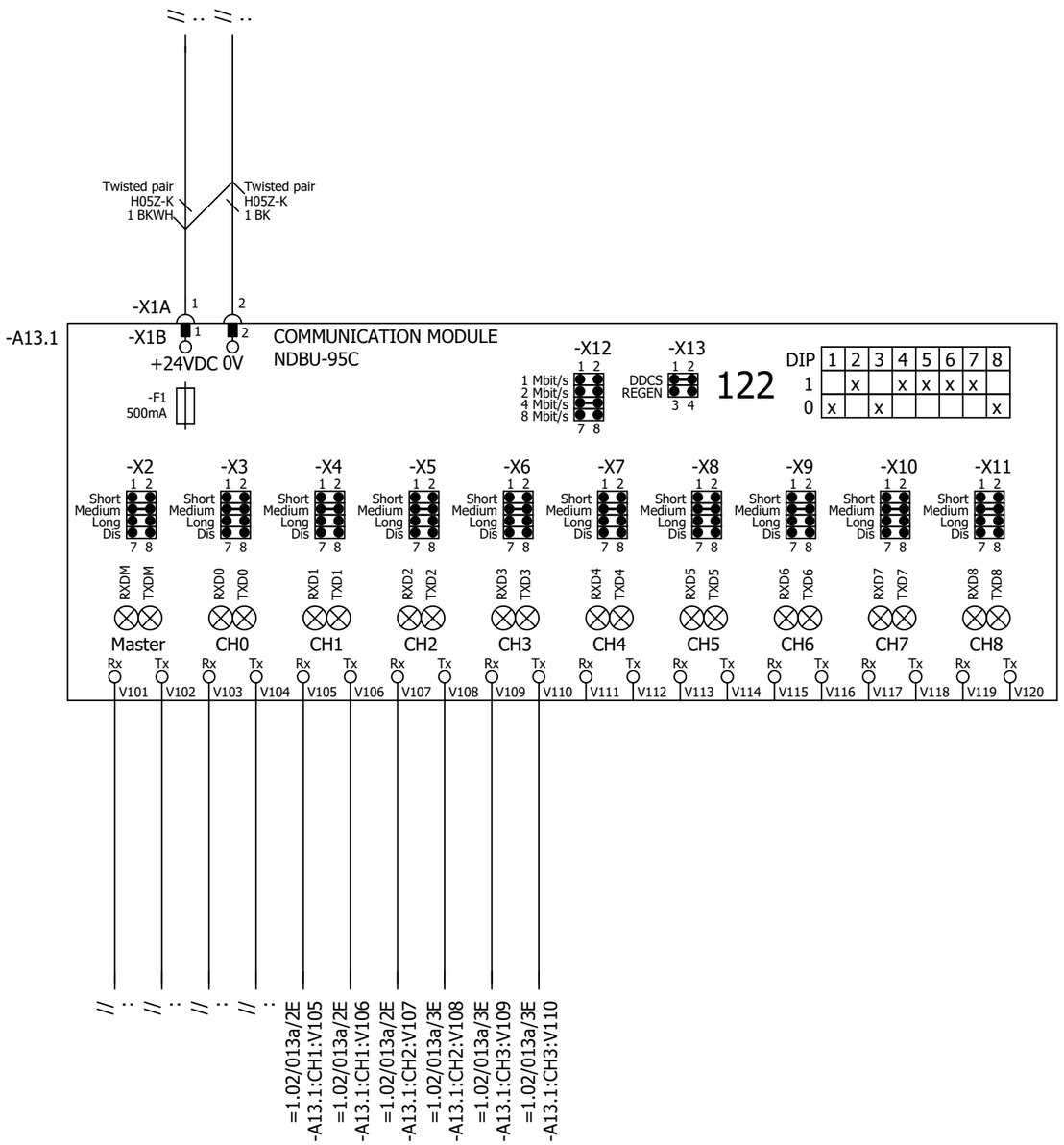

P345812 / 29711

Cust. Doc. No.	Prep. Sky-Xin Zhang 02.08.2023	Title DDCS BRANCHING UNIT	Circuit diagram EFS2
Cust. Ref. No.	App.	INV2.01	SAP Doc. No.
Customer WMMP	Project Zhaka Jack-up Lift System	ACS880-107-0078A-3	EPLAN Doc. No. 3ABDC230674 - 2.01
	Zhaka Jack-up Lift System-1	400V	ABB Ref. No.
			Resp. Dept.

Item Des. = 2.01 + 2.01.1

Rev. .1 Sheet 013a

Cont. 020a

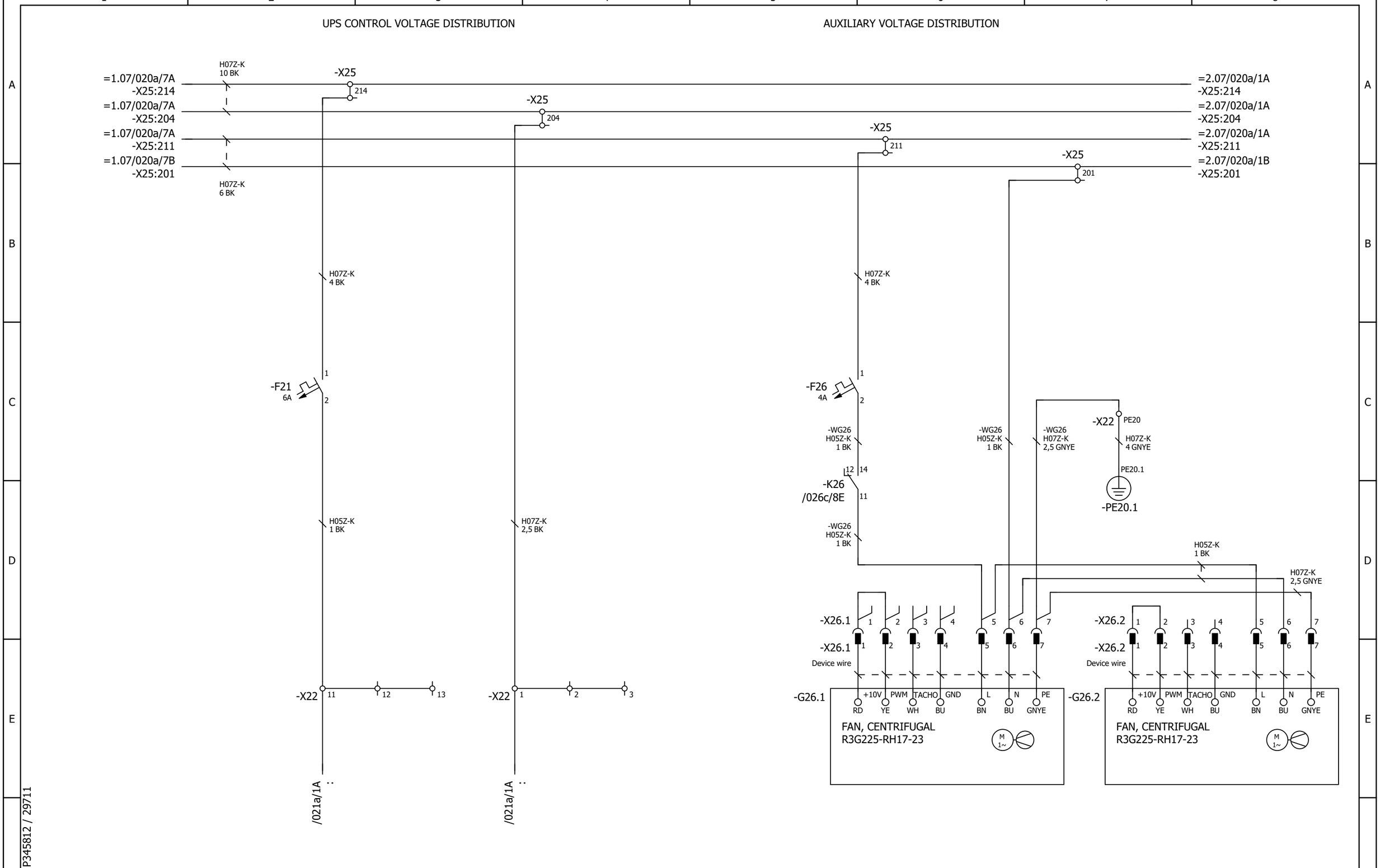

P345812 / 29711

Cust. Doc. No.	Prep. Sky-Xin Zhang 02.08.2023	Title AUXILIARY VOLTAGE DISTRIBUTION	Circuit diagram EFS2	Item Des.	
Cust. Ref. No.	App.	INV2.01	SAP Doc. No.	= 2.01	
Customer WMMP	Project Zhaka Jack-up Lift System	ACS880-107-0078A-3	EPLAN Doc. No. 3ABDC230674 - 2.01	+ 2.01.1	
	Zhaka Jack-up Lift System-1	400V	ABB Ref. No.	Rev. .1	Sheet 020a
			Resp. Dept.	Cont.	021a

24V CONTROL VOLTAGE DISTRIBUTION

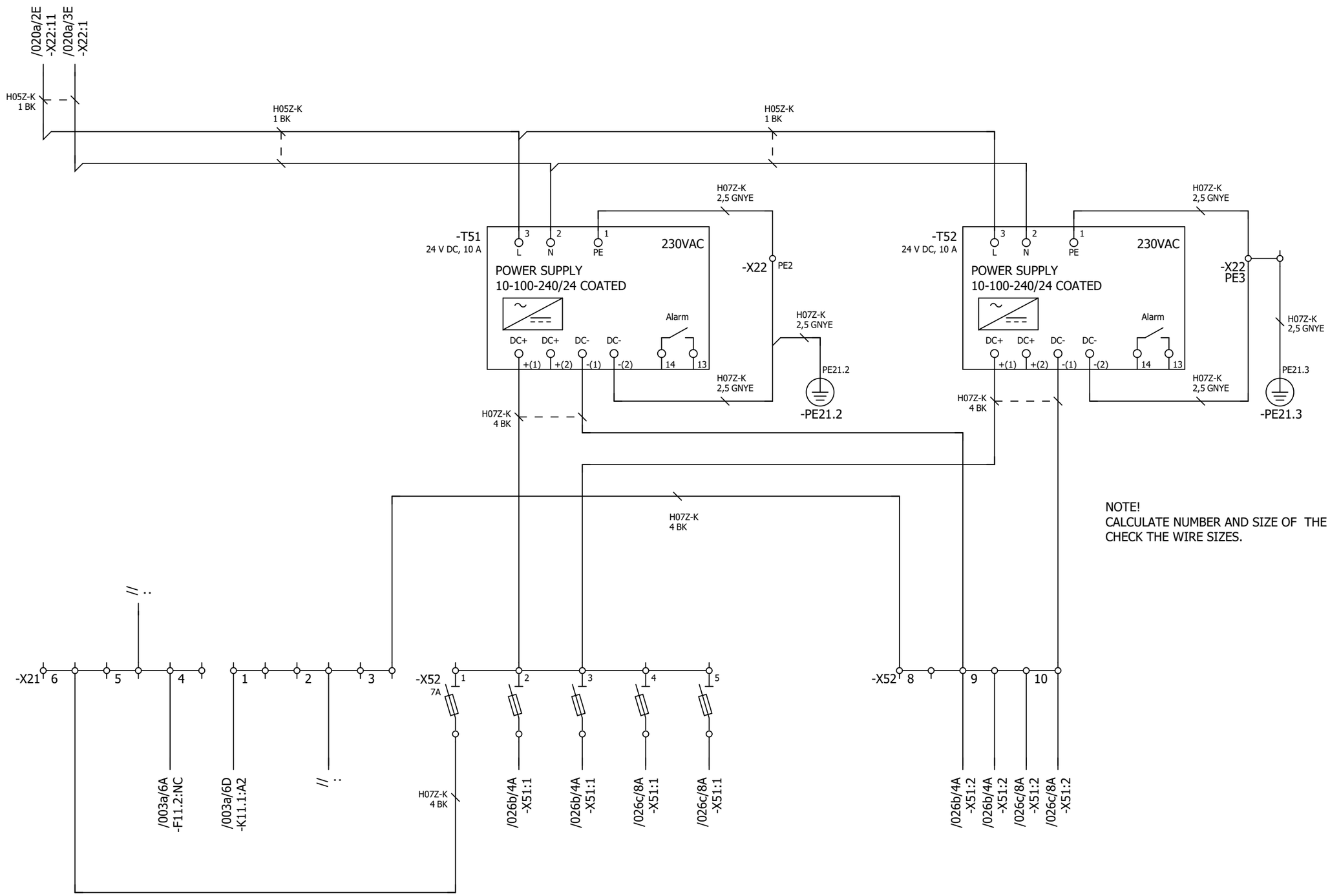

P345812 / 29711

Cust. Doc. No.	Prep. Sky-Xin Zhang 02.08.2023	Title AUXILIARY VOLTAGE DISTRIBUTION	Circuit diagram EFS2	Item Des.	
Cust. Ref. No.	App.	INV2.01	SAP Doc. No.	= 2.01	
Customer WMMP	Project Zhaka Jack-up Lift System	ACS880-107-0078A-3	EPLAN Doc. No. 3ABDC230674 - 2.01	+ 2.01.1	
	Zhaka Jack-up Lift System-1	400V	ABB Ref. No.	Rev. .1	Sheet 021a
			Resp. Dept.	Cont.	026a

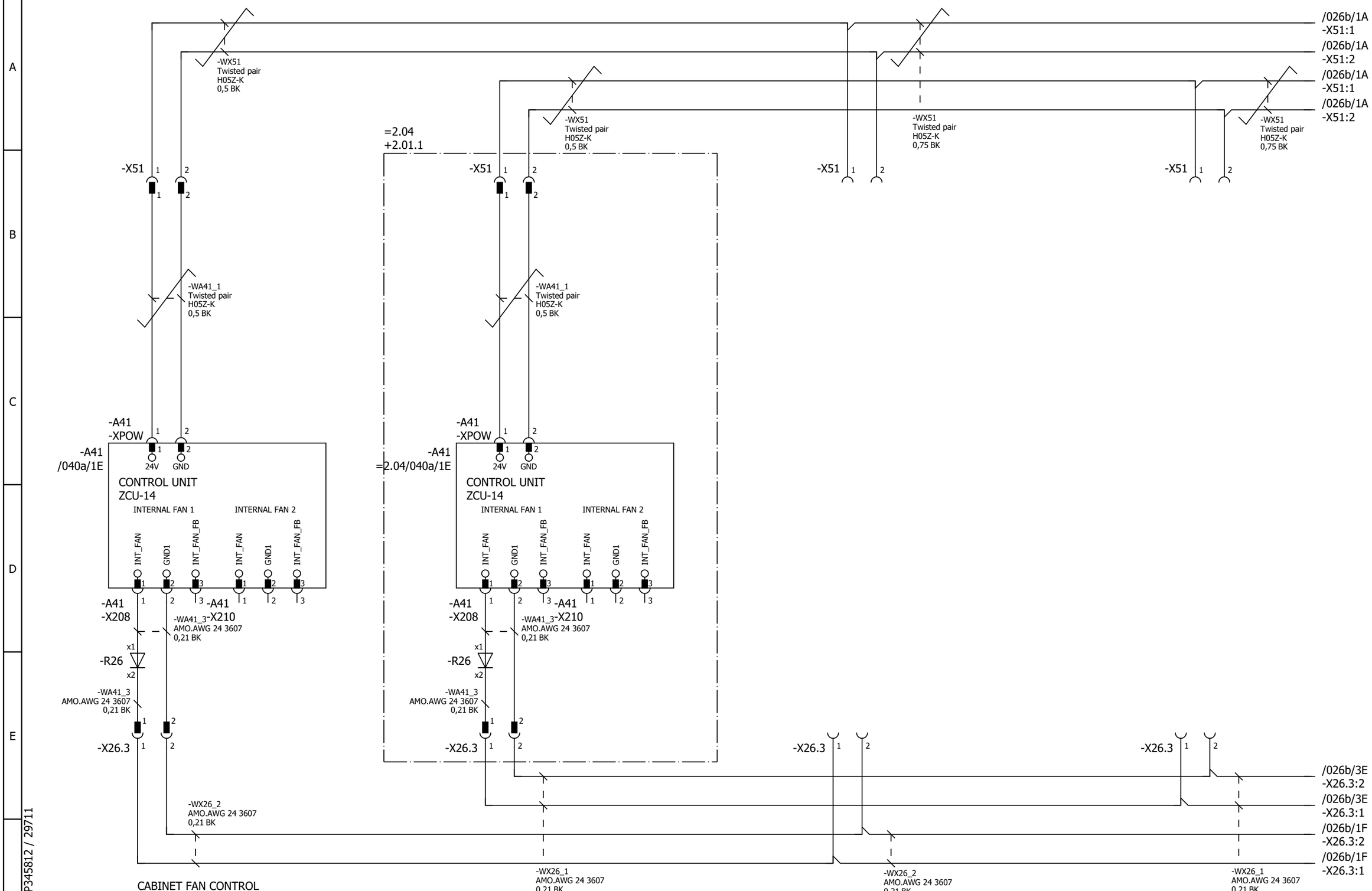

P345812 / 29711

Cust. Doc. No.	Prep. Sky-Xin Zhang 02.08.2023	Title CABINET FAN CONTROL ZCU UPS, 24V FSO, FEA	Circuit diagram EFS2
Cust. Ref. No.	App.	INV2.01	SAP Doc. No.
Customer WMMP	Project Zhaka Jack-up Lift System	ACS880-107-0078A-3	EPLAN Doc. No. 3ABDC230674 - 2.01
	Zhaka Jack-up Lift System-1	400V	ABB Ref. No.
			Resp. Dept.

Item Des. = 2.01 + 2.01.1

Rev. .1 Sheet 026a

Cont. 026b

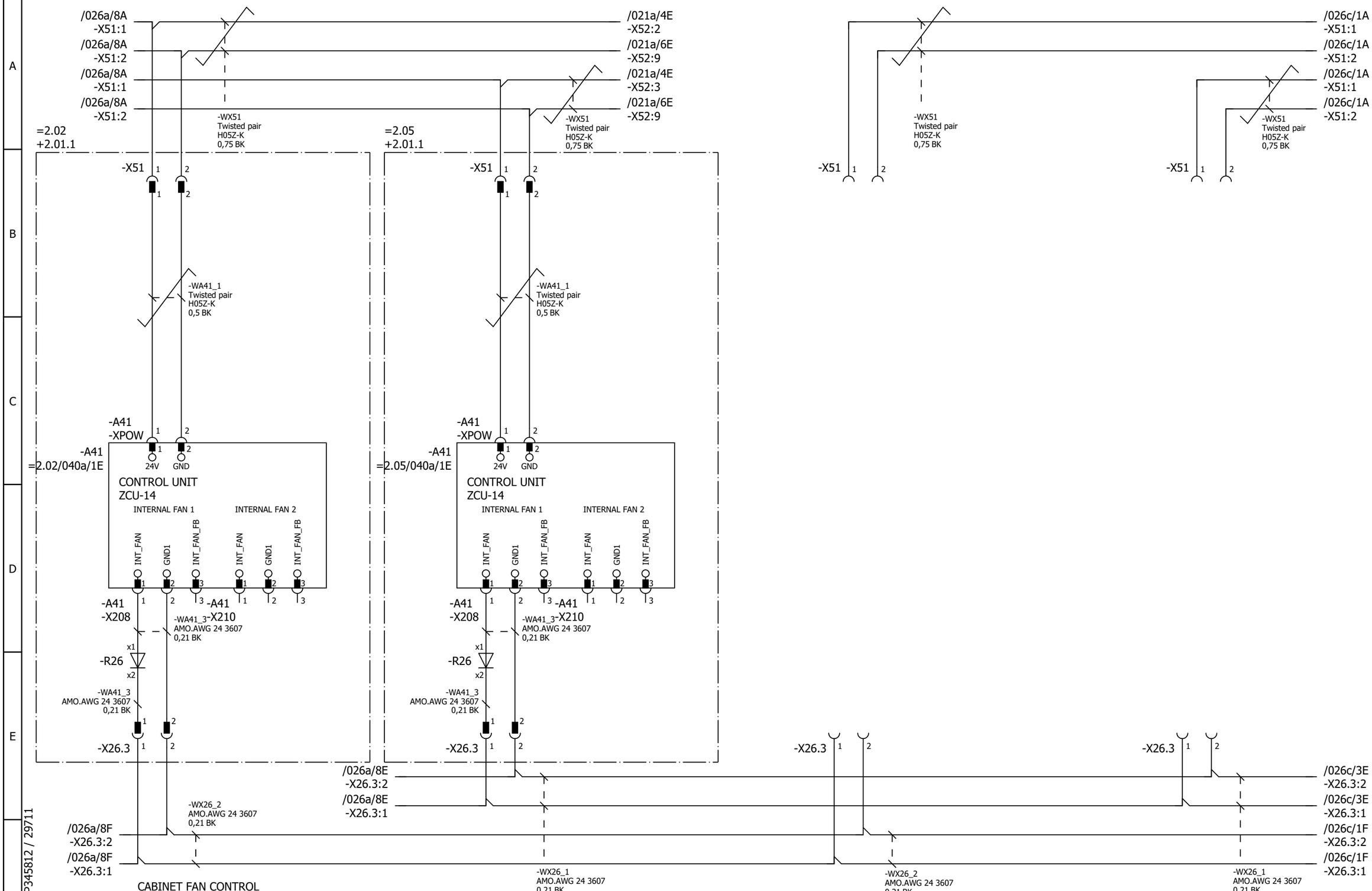

Cust. Doc. No.	Prep. Sky-Xin Zhang 02.08.2023	Title CABINET FAN CONTROL ZCU UPS, 24V FSO, FEA	Circuit diagram EFS2 / Item Des.
Cust. Ref. No.	App.	INV2.01	SAP Doc. No. / = 2.01
Customer WMMP	Project Zhaka Jack-up Lift System	ACS880-107-0078A-3	EPLAN Doc. No. 3ABDC230674 - 2.01 / + 2.01.1
	Zhaka Jack-up Lift System-1	400V	ABB Ref. No. / Rev. .1 / Sheet 026b
			Resp. Dept. / Cont. 026c

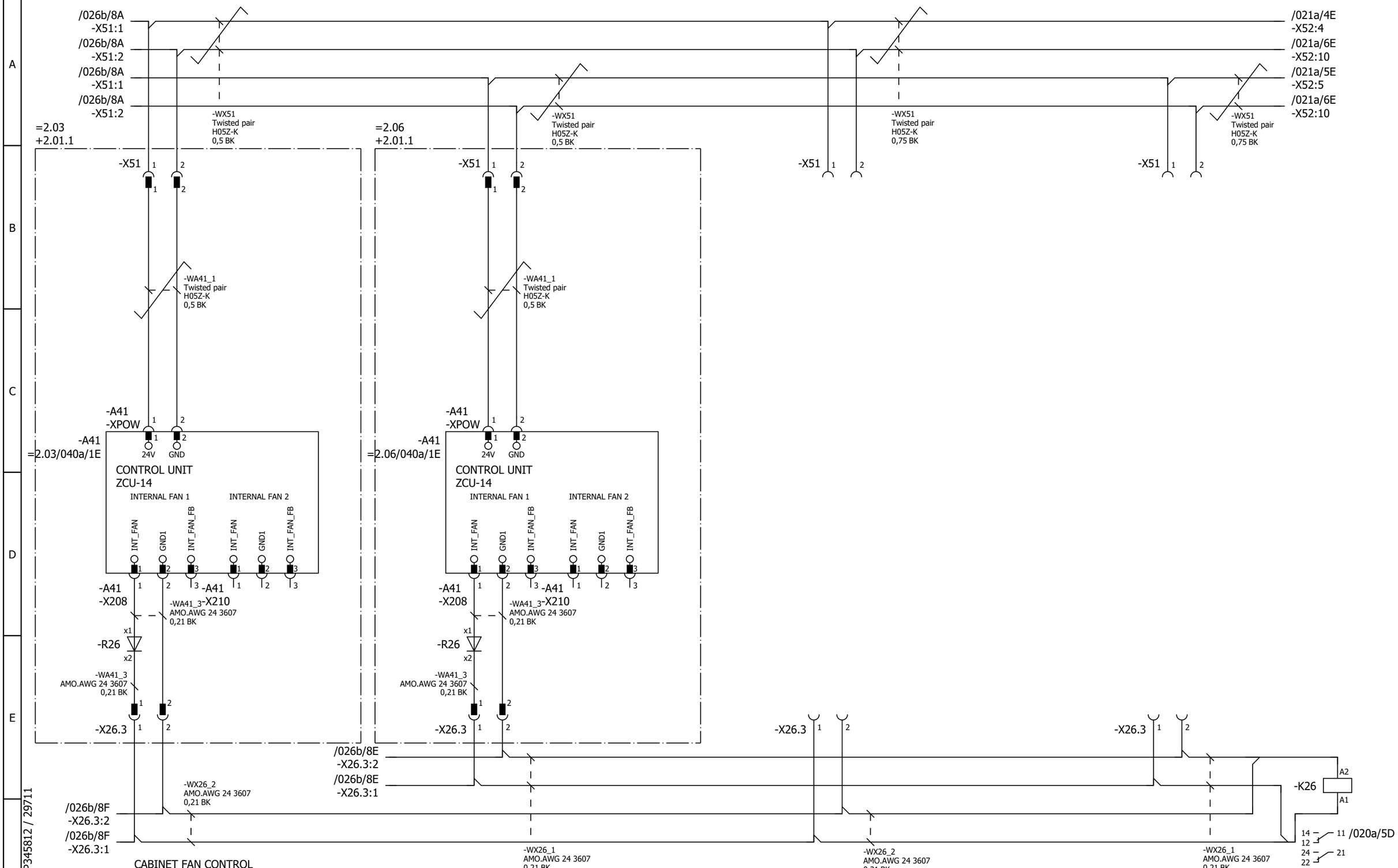

Cust. Doc. No.	Prep. Sky-Xin Zhang 02.08.2023	Title CABINET FAN CONTROL ZCU UPS, 24V FSO, FEA	Circuit diagram EFS2
Cust. Ref. No.	App.	INV2.01	SAP Doc. No.
Customer WMMP	Project Zhaka Jack-up Lift System	ACS880-107-0078A-3	EPLAN Doc. No. 3ABDC230674 - 2.01
	Zhaka Jack-up Lift System-1	400V	ABB Ref. No.
			Resp. Dept.

Item Des. = 2.01 + 2.01.1

Rev. .1 Sheet 026c

Cont. 040a

*) GEN.H05Z-K BK 1,0

Control and status signals	Terminal	Pin
E-STOP FEEDBACK 1 - ESTOP ACTIVE	-XRO1	12
RUNNING 1 - RUNNING	-XRO2	22
FAULT (-1) 1 - NO FAULT	-XRO3	32

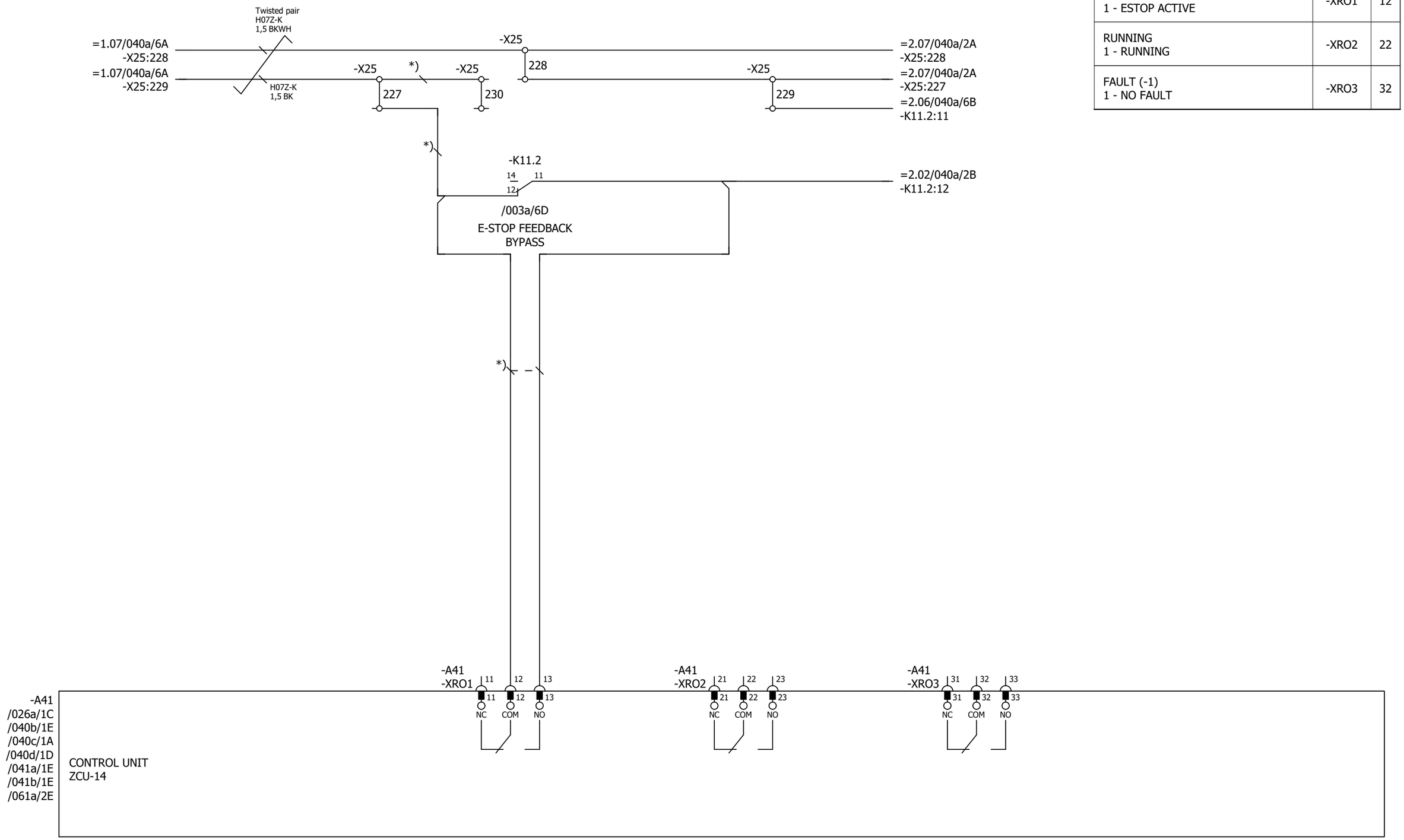

Cust. Doc. No.	Prep. Sky-Xin Zhang 02.08.2023	Title CONTROL BOARD INV2.01 ACS880-107-0078A-3 400V	Circuit diagram EFS2
Cust. Ref. No.	App.		SAP Doc. No.
Customer WMMP	Project Zhaka Jack-up Lift System Zhaka Jack-up Lift System-1		EPLAN Doc. No. 3ABDC230674 - 2.01
			ABB Ref. No.
			Resp. Dept.

Item Des.
= 2.01
+ 2.01.1

Rev. .1 Sheet 040a
Cont. 040b

Control and status signals	Terminal	Pin
DIGITAL INTERLOCK	-XD24	1
START/STOP 1 - START	-XDI	1
FORWARD/REVERSE 1 - REVERSE	-XDI	2
RESET	-XDI	3
EMERGENCY STOP 0 - ACTIVE	-XDI	4
NOT SPECIFIED	-XDI	5
DI6 NOT IN USE	-XDI	6
OUTPUT: READY	-XDIO	1
OUTPUT: RUNNING	-XDIO	2

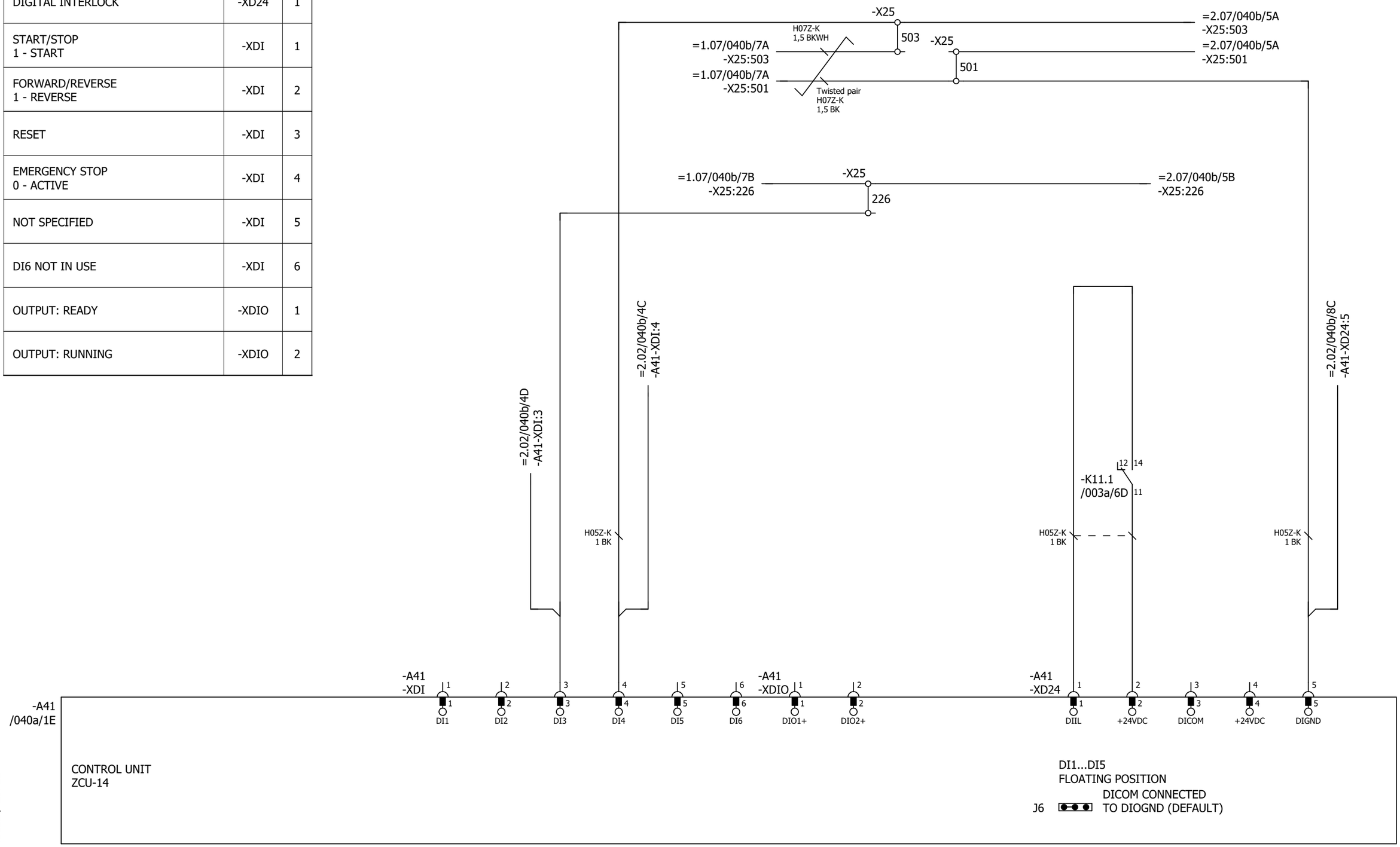

P345812 / 29711

Cust. Doc. No.	Prep. Sky-Xin Zhang 02.08.2023	Title CONTROL BOARD INV2.01 ACS880-107-0078A-3 400V	Circuit diagram EFS2	Item Des.	
Cust. Ref. No.	App.		SAP Doc. No.	= 2.01 + 2.01.1	
Customer WMMP	Project Zhaka Jack-up Lift System Zhaka Jack-up Lift System-1		EPLAN Doc. No. 3ABDC230674 - 2.01		
			ABB Ref. No.	Rev. .1	Sheet 040b
			Resp. Dept.	Cont.	040c

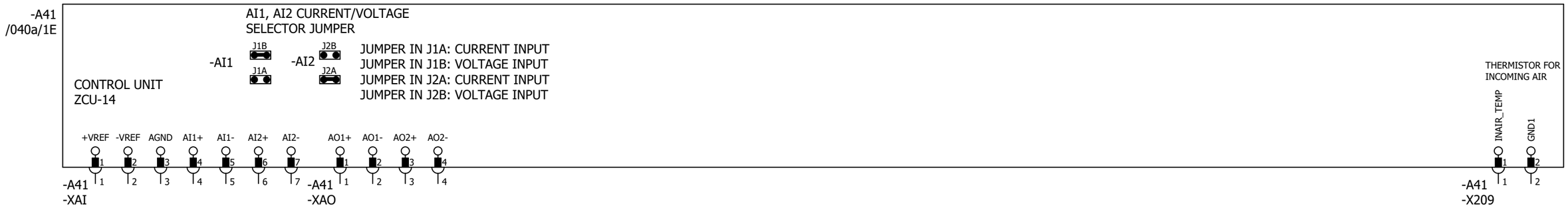

Control and status signals	Terminal	Pin
MOTOR TEMP. MONITORING 0(2)…10V	-XAI	4
AI2 NOT SPECIFIED BY DEFAULT NOT IN USE 0(4)…20mA	-XAI	6
CURR SOU MOT TEMP MONIT 0(4)...20mA	-XAO	1
CURRENT 0(4)…20mA ↔ 0(4)…MOTOR CURRENT	-XAO	3

P345812 / 29711

Cust. Doc. No.	Prep. Sky-Xin Zhang 02.08.2023	Title CONTROL BOARD INV2.01 ACS880-107-0078A-3 400V	Circuit diagram EFS2
Cust. Ref. No.	App.		SAP Doc. No.
Customer WMMP	Project Zhaka Jack-up Lift System Zhaka Jack-up Lift System-1		EPLAN Doc. No. 3ABDC230674 - 2.01
			ABB Ref. No.
			Resp. Dept.

Item Des.
= 2.01
+ 2.01.1

Rev. .1 Sheet 040c
Cont. 040d

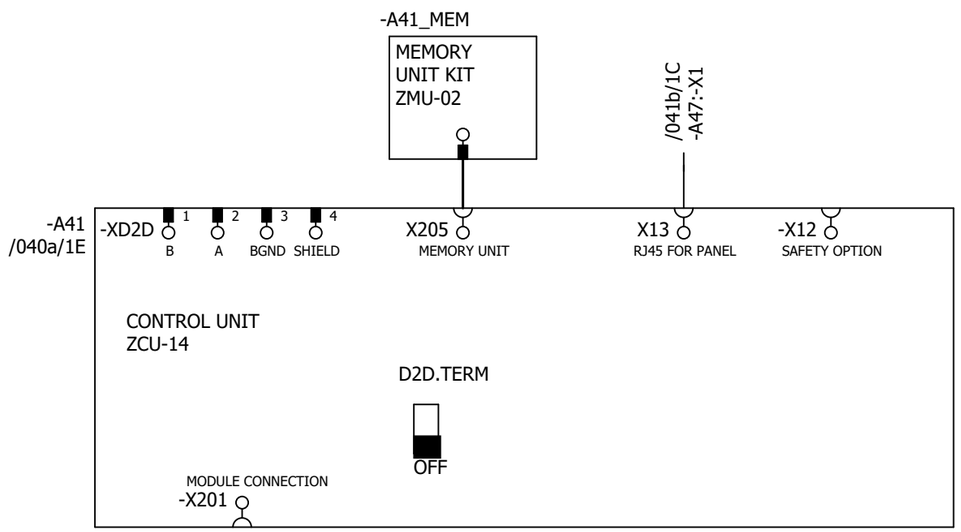

P345812 / 29711

Cust. Doc. No.	Prep. Sky-Xin Zhang 02.08.2023	Title CONTROL BOARD	Circuit diagram EFS2
Cust. Ref. No.	App.	INV2.01	SAP Doc. No.
Customer WMMP	Project Zhaka Jack-up Lift System	ACS880-107-0078A-3	EPLAN Doc. No. 3ABDC230674 - 2.01
	Zhaka Jack-up Lift System-1	400V	ABB Ref. No.
			Resp. Dept.

Item Des.
= 2.01
+ 2.01.1

Rev. .1 Sheet 040d
Cont. 041a

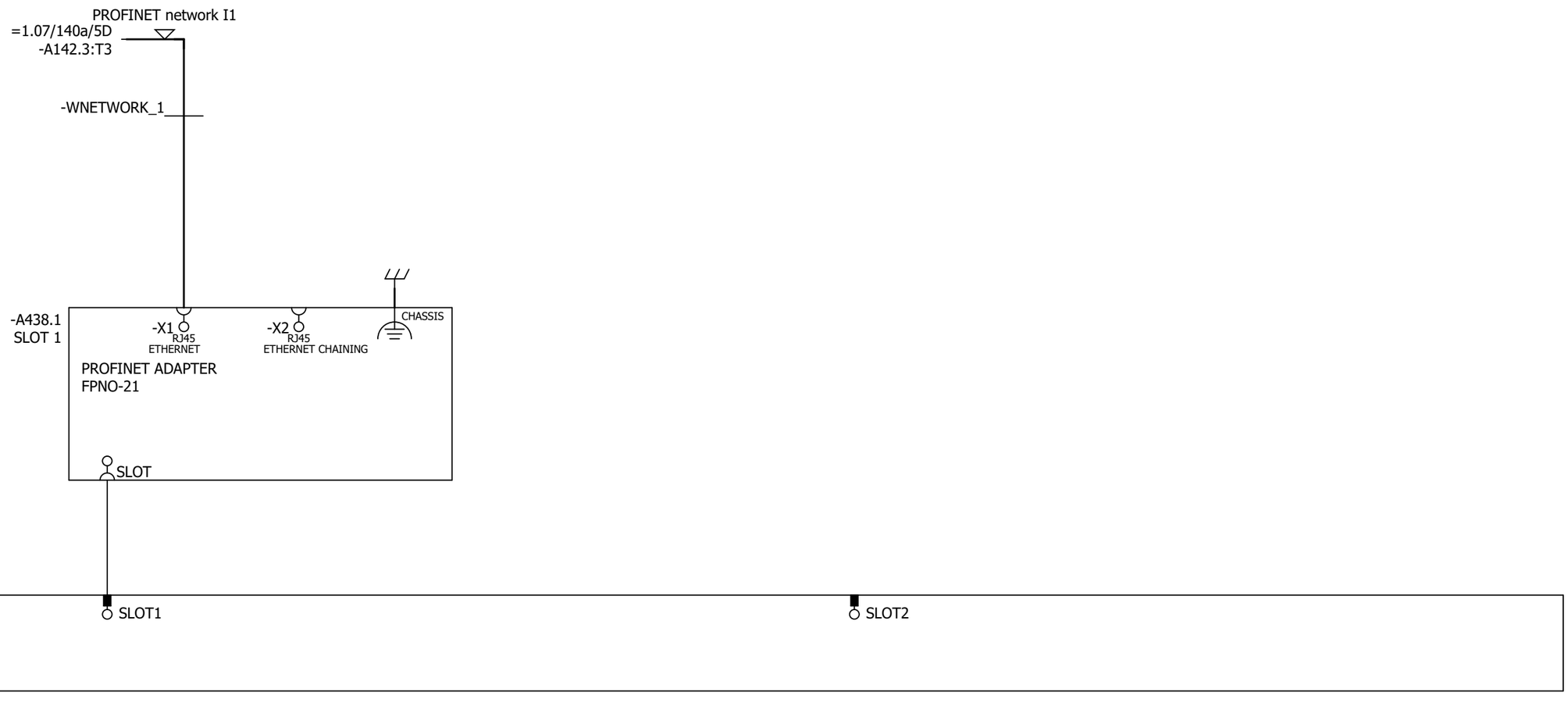

Cust. Doc. No.	Prep. Sky-Xin Zhang 02.08.2023	Title OPTION CARDS INV2.01 ACS880-107-0078A-3 400V	Circuit diagram EFS2
Cust. Ref. No.	App.		SAP Doc. No.
Customer WMMP	Project Zhaka Jack-up Lift System Zhaka Jack-up Lift System-1		EPLAN Doc. No. 3ABDC230674 - 2.01
			ABB Ref. No.
			Resp. Dept.

Item Des.
= 2.01
+ 2.01.1

Rev. .1 Sheet 041a
Cont. 041b

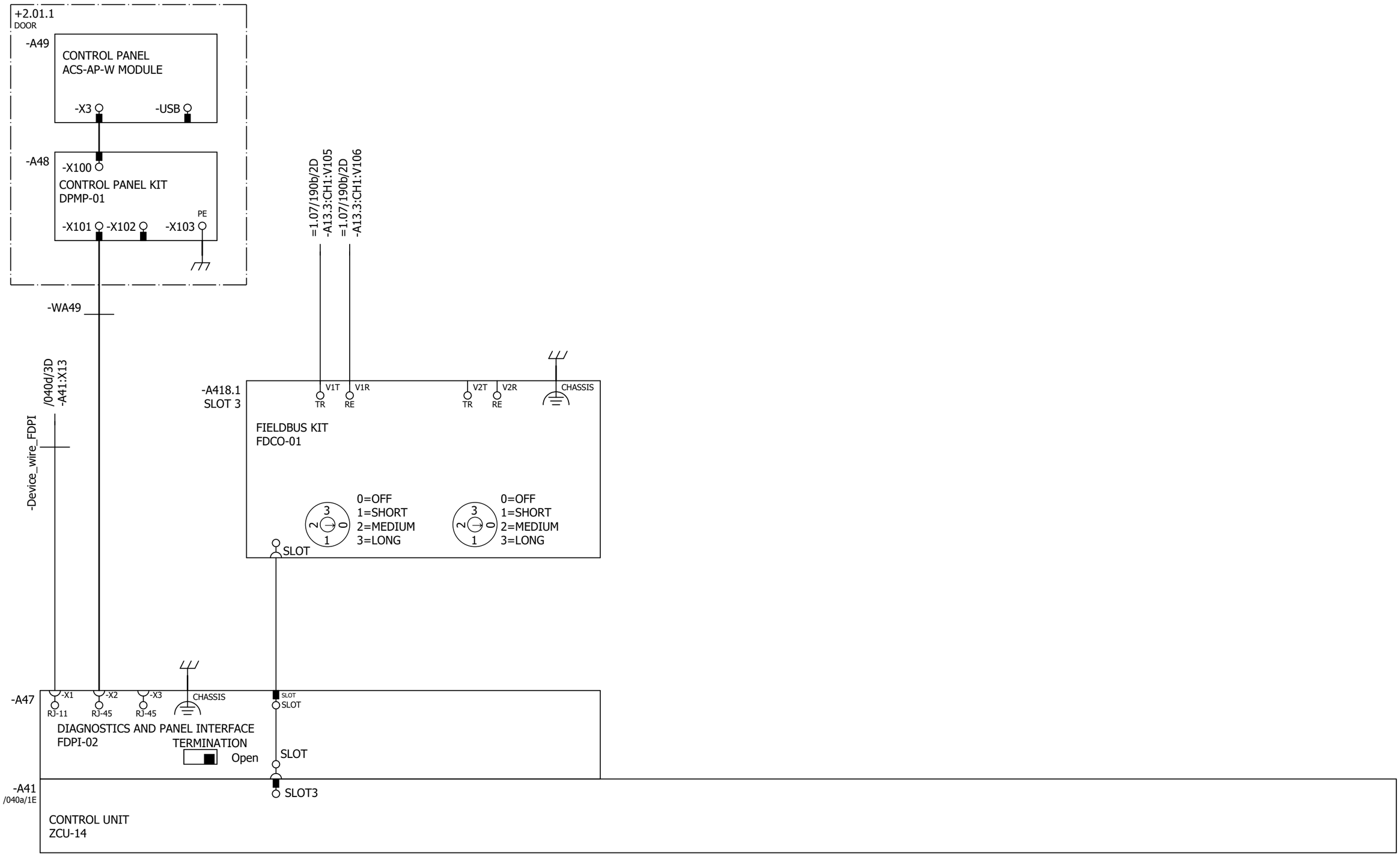

Cust. Doc. No.	Prep. Sky-Xin Zhang 02.08.2023	Title OPTION CARDS	Circuit diagram EFS2	Item Des.
Cust. Ref. No.	App.	INV2.01	SAP Doc. No.	= 2.01
Customer WMMP	Project Zhaka Jack-up Lift System	ACS880-107-0078A-3	EPLAN Doc. No. 3ABDC230674 - 2.01	+ 2.01.1
	Zhaka Jack-up Lift System-1	400V	ABB Ref. No.	Rev. .1 Sheet 041b
			Resp. Dept.	Cont. 061a

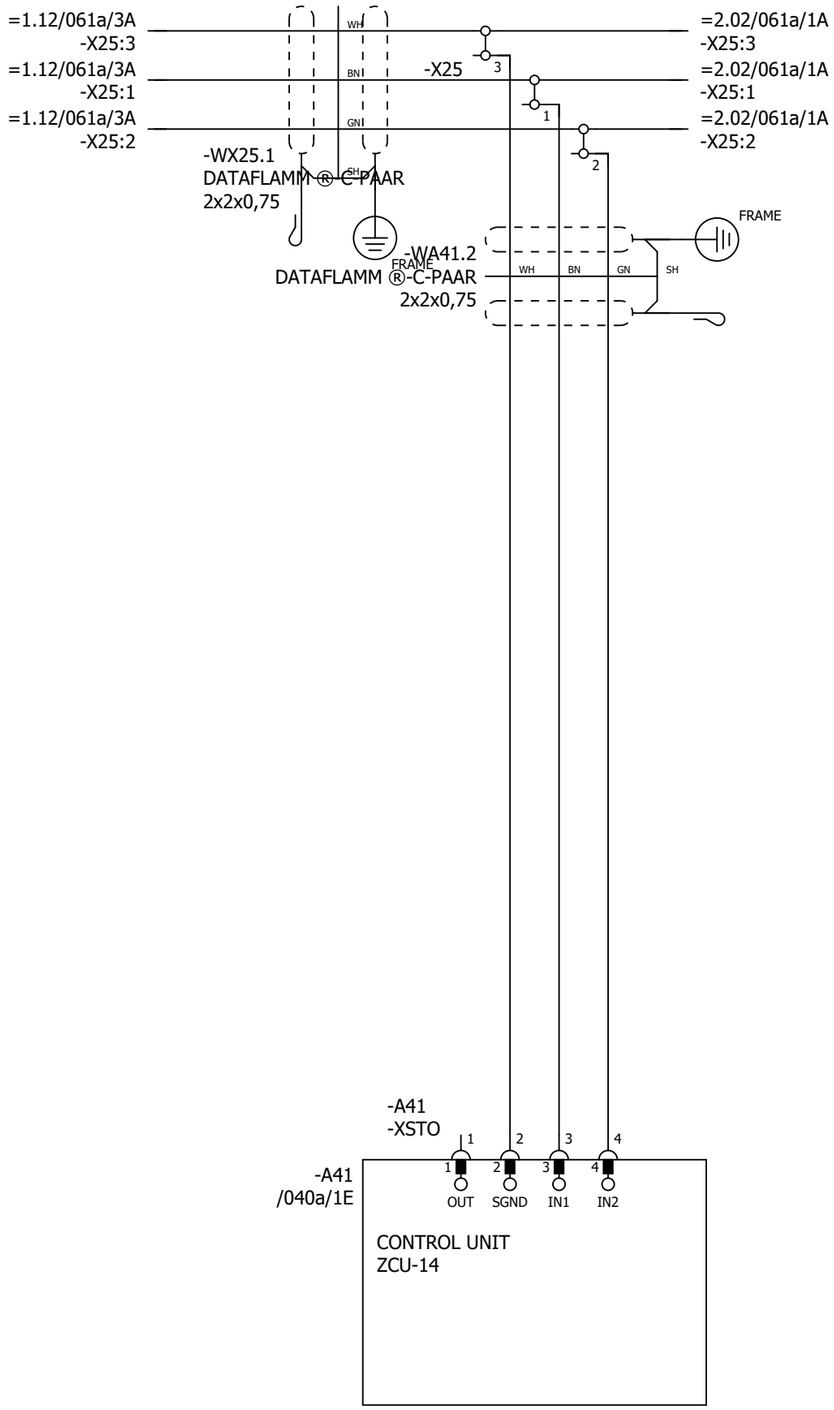

P345812 / 29711

SAFETY CIRCUIT
MACRO REVISION 6
RULES CONVERTED 19.7.2023

Cust. Doc. No.	Prep. Sky-Xin Zhang 02.08.2023	Title SAFETY CIRCUIT INV2.01 ACS880-107-0078A-3 400V	Circuit diagram EFS2
Cust. Ref. No.	App.		SAP Doc. No.
Customer WMMP	Project Zhaka Jack-up Lift System Zhaka Jack-up Lift System-1		EPLAN Doc. No. 3ABDC230674 - 2.01
			ABB Ref. No.
			Resp. Dept.

Item Des.
= 2.01
+ 2.01.1

Rev. .1 Sheet 061a
Cont. 095a

CABINET
HEATING

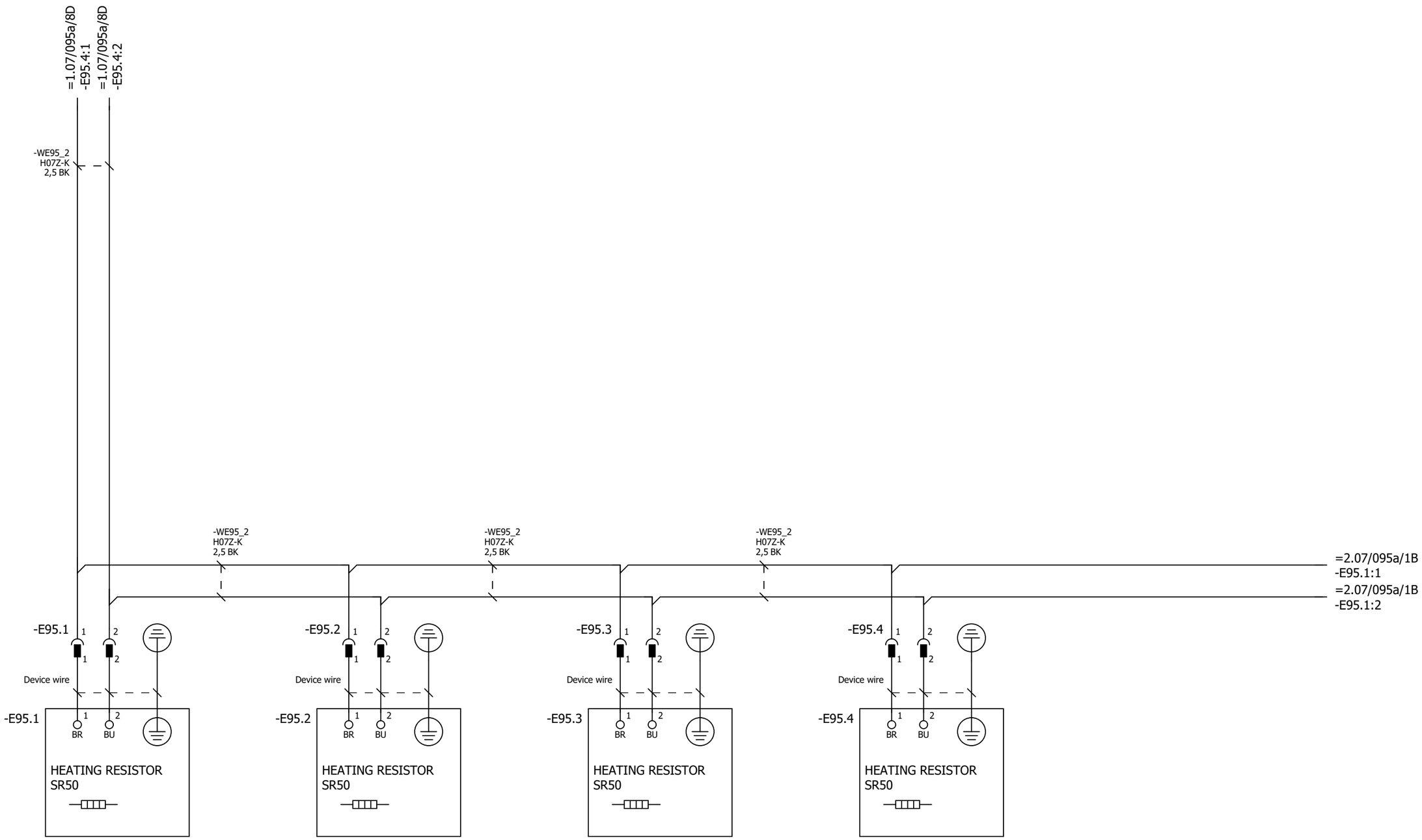

P345812 / 29711

Cust. Doc. No.	Prep. Sky-Xin Zhang 02.08.2023	Title CABINET HEATING	Circuit diagram EFS2	Item Des.	
Cust. Ref. No.	App.	INV2.01	SAP Doc. No.	= 2.01	
Customer WMMP	Project Zhaka Jack-up Lift System	ACS880-107-0078A-3	EPLAN Doc. No. 3ABDC230674 - 2.01	+ 2.01.1	
	Zhaka Jack-up Lift System-1	400V	ABB Ref. No.	Rev. .1	Sheet 095a
			Resp. Dept.	Cont.	&MPC/Part list_1

Part list: 3ABDC230674DU02013

Item	Sort String	Qty.Str	Unit	Component Number	Description and text	Technical data
0010		1.000	ST		ACS880-107-0078A-3+A012+B053+C121+C132+	
0020		1.000	ST		_C206+E210+F272+F287+F288+G300+G307+G315	
0030		1.000	ST		_+G320+G330+G344+H352+H367+J400+K492+L50	
0040		1.000	ST		_3+P913+Q964	
0050		1.000	ST		=2.01	
0060		1.000	ST		+2.01.1,INU3	
0070		1.000	ST		Powerconversionequipment	
0080	-A41_MEM	1.000	PC	3AXD50000006010	MEMORY UNIT KIT ZMU-02	
0090	-T11	1.000	PC	3AUA0000120009-M	ACS880-104-0078A-3+P922	+P922
0100	SCREW	1.000	PC	3AFE68681481	SCREW K30X10 TORX	PT WN1452 ZN
0110	SOFTWARE	1.000	PC	3AUA0000153462	SOFTWARE PRIMARY CONTROL PROGRA	AINF6 FOR ZCU-12/14
0120		1.000	ST		R4imoduleDCfuse	
0130	-F11.1-2	2.000	PC	3AXD50000000219	FUSE FR27UQ69V160T/160A	6.921 CP URQ 27X60MM FERRULE;AR
0140		1.000	ST		R3i-R4imoduleDCfusebase	
0150	(-F11.1-2)	2.000	PC	3AUA0000089227	FUSE HOLDER FUSE BASE US271MI 150A	FUSE BASE US271MI 150A 800V
0160		1.000	ST		motorterminalR4i,coppercable	
0170	-X1	1.000	PC	3ABD50000000270	CONNECTOR PPAC-50	50 MM2;150 A;800V
0180	-X1	1.000	PC	3ABD50000000270	CONNECTOR PPAC-50	50 MM2;150 A;800V
0190	-X1	1.000	PC	3ABD50000000270	CONNECTOR PPAC-50	50 MM2;150 A;800V
0200		1.000	ST		24VDCsupplyZCU	
0210	-WA41_1	1.000	PC	3AXD50000005218	WIRE HARNESS 24VDC SUPPLY X51 ZCU V	HALOGEN FREE;X51_A51
0220		1.000	ST		Rooffancontrol	
0230	-WA41_3	1.000	PC	3AXD50000002688	WIRE HARNESS FAN CONTROL MAIN WIRE	HALOGEN FREE;X208_X26.3
0240		1.000	ST		Toprowmodulewireharness	
0250	-WT11	1.000	PC	3AXD50000002256	WIRE HARNESS R4I FUSE_MODULE V2	HALOGEN FREE;MAIN CIRCUIT WIRE SET
0260	-WX1	1.000	PC	3AXD50000002258	WIRE HARNESS R4I MODULE_OUTPUT TR V	HALOGEN FREE;MAIN CIRCUIT WIRE SET
0270		1.000	ST		Optionmodule	
0280	-A418.1	1.000	PC	3AUA0000107392	COMMUNIC. ADAPTER FDCO-01	
0290		1.000	ST		Controlpanel	
0300	-A47	1.000	PC	3AUA0000108650	FIELDBUS KIT FDPI-02	PANEL BUS ADAPTER
0310	-A48	1.000	PC	3AUA0000108878	CONTROL PANEL KIT DPMP-01	DPMP-01
0320	-A49	1.000	PC	3AXD50000025964	CONTROL PANEL ACS-AP-W MODULE	ASSISTANT PANEL WIRELESS CPU1
0330		1.000	ST		DCfusesupervision	

P345812 / 29711

Cust. Doc. No.	Prep.	Title PART LIST INV2.01 ACS880-107-0078A-3 400V	Item Des. = 2.01 +
Cust. Ref. No.	App.		SAP Doc. No.
Customer WMMP	Project Zhaka Jack-up Lift System Zhaka Jack-up Lift System-1		EPLAN Doc. No. 3ABDC230674 - 2.01
			ABB Ref. No. / Rev. / Sheet Part list_1
			Resp. Dept. / Cont. Part list_2

Part list: 3ABDC230674DU02013

Item	Sort String	Qty.Str	Unit	Component Number	Description and text	Technical data
0340	-K11.1-2	2.000	PC	3AXD50000021313	RELAY DEK_REL_G24/21	250 V;6 A;COIL 24VDC
0350	-WK11	1.000	PC	3AXD50000003220	WIRE HARNESS 6 MODULE 800MM CABINET	HALOGEN FREE;DC FUSE SUPERVISION
0360	-WK11	1.000	PC	3AXD50000003227	WIRE HARNESS 1ST MODULE SUPERV 800M	HALOGEN FREE;DC FUSE SUPERVISION
0370	-WK11	1.000	PC	3AXD50000003228	WIRE HARNESS 2ND MODULE SUPERV 800M	HALOGEN FREE;DC FUSE SUPERVISION
0380	-WK11	1.000	PC	3AXD50000003229	WIRE HARNESS 3RD MODULE SUPERV 800M	HALOGEN FREE;DC FUSE SUPERVISION
0390	-WK11	1.000	PC	3AXD50000003230	WIRE HARNESS 4TH MODULE SUPERV 800M	HALOGEN FREE;DC FUSE SUPERVISION
0400	-WK11	1.000	PC	3AXD50000003231	WIRE HARNESS 5TH MODULE SUPERV 800M	HALOGEN FREE;DC FUSE SUPERVISION
0410	-WK11	1.000	PC	3AXD50000003232	WIRE HARNESS 6TH MODULE SUPERV 800M	HALOGEN FREE;DC FUSE SUPERVISION
0420		1.000	ST		FieldBus	
0430	-A438.1	1.000	PC	3AXD50000192779	OPTION MODULE FPNO-21	PROFINET IO
0440		1.000	ST		Supplementtorelay	
0450	(-K11.1)	1.000	PC	3AXD50000021312	TERMINAL BLOCK ST EB2_DIK_RD 2716693	2POLE, 6,15 MM PITCH;FOR DEK RELAYS
0460		1.000	ST		CommonDCfuse	
0470	-F10.1-2	2.000	PC	3AXD50000000246	FUSE 170M4416	630 A;690 V;DIN1 FLUSH END;AR;200KA
0480	-F10.3-4	2.000	PC	3AXD50000000234	FUSE 170M4410	315 A;690 V;DIN1 FLUSH END;AR;200KA
0490		1.000	ST		Cabinetfan	
0500	-F26	1.000	PC	3AFE68264758	PROTECTION SWITCH S 201-K4	4A, 440VAC/60VDC
0510	-G26.1	1.000	PC	3AXD50000000592	FAN R3G225-RH17-23	230V;96W;50HZ;60HZ;0,77A;1080M3S CCC,UL
0520	-G26.2	1.000	PC	3AXD50000000592	FAN R3G225-RH17-23	230V;96W;50HZ;60HZ;0,77A;1080M3S CCC,UL
0530	-K26	1.000	PC	3AUA0000102191	RELAY RCL425024-SOCKET-DIODE	8 A;24 V;24VDC, 2C/O
0540	-X26.1	1.000	PC	3AXD50000000723	TERMINAL BLOCK AS X26 FAN SUPPLY PLUG	12,00 AWG;2,50 mm2;24,00 A;500,00 V
0550	(-X26.1)	1.000	PC	3AXD50000000724	TERMINAL BLOCK AS X26 FAN SUPPLY SOCKET	12,00 AWG;2,50 mm2;24,00 A;500,00 V
0560	-X26.2	1.000	PC	3AXD50000000723	TERMINAL BLOCK AS X26 FAN SUPPLY PLUG	12,00 AWG;2,50 mm2;24,00 A;500,00 V
0570	(-X26.2)	1.000	PC	3AXD50000000724	TERMINAL BLOCK AS X26 FAN SUPPLY SOCKET	12,00 AWG;2,50 mm2;24,00 A;500,00 V
0580		1.000	ST		Auxvoltagedistribution	
0590	-X22	1.000	PC	3AXD50000001632	TERMINAL BLOCK AS X22	12 AWG;2 mm2;24 A;800 V
0600	-X25	1.000	PC	3AXD50000001609	TERMINAL BLOCK AS X25 (1)	6 AWG;10 mm2;57 A;800 V
0610	-X25	1.000	PC	3ABD00609550	ASSEMBLY PLATE FOR X25 TERMINAL	acs880
0620		1.000	ST		EMSTOPterminalblock	
0630	-X25	1.000	PC	3AXD50000001610	TERMINAL BLOCK AS X25 (2)	12 AWG;2 mm2;24 A;500 V
0640		1.000	ST		STOterminalblock	
0650	-X25	1.000	PC	3AXD50000001631	TERMINAL BLOCK AS X60	12 AWG;2 mm2;24 A;500 V
0660		1.000	ST		24vDCdistributionwithUPS	

P345812 / 29711

Cust. Doc. No.	Prep.	Title PART LIST INV2.01 ACS880-107-0078A-3 400V	Item Des. = 2.01 +
Cust. Ref. No.	App.		SAP Doc. No.
Customer WMMP	Project Zhaka Jack-up Lift System Zhaka Jack-up Lift System-1		EPLAN Doc. No. 3ABDC230674 - 2.01
			ABB Ref. No. / Rev. / Sheet Part list_2
			Resp. Dept. / Cont. Part list_3

Part list: 3ABDC230674DU02013

Item	Sort String	Qty.Str	Unit	Component Number	Description and text	Technical data
0670	-F21	1.000	PC	3AFE68264766	PROTECTION SWITCH S 201-K6	S 201-K6
0680		1.000	ST		24VDCsupply	
0690	-WX51	1.000	PC	3AXD50000005214	WIRE HARNESS 24VDC SUPPLY 800MM V2	HALOGEN FREE;X52_X51
0700		1.000	ST		Cabinetrooffansupply	
0710	-WG26	1.000	PC	3AXD50000036922	WIRE HARNESS CABINET ROOF FAN SUPPL	R1I-R4I 800/1000MM
0720		1.000	ST		Cabinetrooffancontrol	
0730	-WX26_1	1.000	PC	3AXD50000005080	WIRE HARNESS 800MM CABINET LOWER RO	HALOGEN FREE;X26.3_X26.4
0740	-WX26_2	1.000	PC	3AXD50000005078	WIRE HARNESS 800MM CABINET UPPER RO	HALOGEN FREE;X26.3_K26
0750		1.000	ST		24VDCdistribution	
0760	-F52.1-5	5.000	PC	3AXD50000005465	FUSE MDL-7-R	7 A;250 V;¼" x 1¼";GLASS TUBE;TIME-DELAY
0770	-T22	1.000	PC	3ABD00010542	POWER SUPPLY NDR-120-24	24V 5A
0780	-X21	1.000	PC	3AXD50000001633	TERMINAL BLOCK AS X21	12 AWG;2 mm2;24 A;800 V
0790	-X52	1.000	PC	3AXD50000005221	TERMINAL BLOCK AS 24VDC X52 TERM BLOCK 5	10 AWG;4 mm2;10 A;500 V;fuse size 6,3x32
0800		1.000	ST		24vDCdistribution	
0810	-T51	1.000	PC	3ABD00010602	POWER SUPPLY NDR-240-24	24V 10A
0820	-T52	1.000	PC	3ABD00010602	POWER SUPPLY NDR-240-24	24V 10A
0830		1.000	ST		Cabinetheaters	
0840	-E95.1-4	4.000	PC	3AFE09827498	HEATING EQUIPMENT SR50	HEATER 50W/220V(110-270VACDC)
0850	(-E95.1-4)	4.000	PC	3AXD50000010133	ASSEMBLY PLATE HEATER	STEEL HDG 1,0;DEGREAS CLEAN
0860	(-E95.1-4)	1.000	PC	3AXD50000010509	ASSEMBLY DRAWING HEATER 50 AND 100W	
0870	X95.1A-4A	4.000	PC	3AXD50000007033	CONNECTOR SC 2,5/ 2	2,50 mm2;24 A;500 V;2-POS. MALE
0880	X95.1B-4B	4.000	PC	3AUA0000066694	CONNECTOR SSL2.5 3043815	LOCKING ELEMENTS FOR ST-COMBI CONNECTOR
0890		1.000	ST		Supplementforrelay	
0900	(-K11)	2.000	PC	3AXD50000021311	CONNECTOR EB 10-DIK RD 2716774	10POLE, 6,15 MM PITCH;FOR DEK RELAYS
0910	(-K11)	1.000	PC	3AXD50000021314	RELAY D-DEK_1,5_GN	end plate

P345812 / 29711

Cust. Doc. No.	Prep.	Title PART LIST INV2.01 ACS880-107-0078A-3 400V	Item Des. = 2.01 +
Cust. Ref. No.	App.		SAP Doc. No.
Customer WMMP	Project Zhaka Jack-up Lift System Zhaka Jack-up Lift System-1		EPLAN Doc. No. 3ABDC230674 - 2.01
			ABB Ref. No. / Rev. / Sheet Part list_3
			Resp. Dept. / Cont. &EMA/1

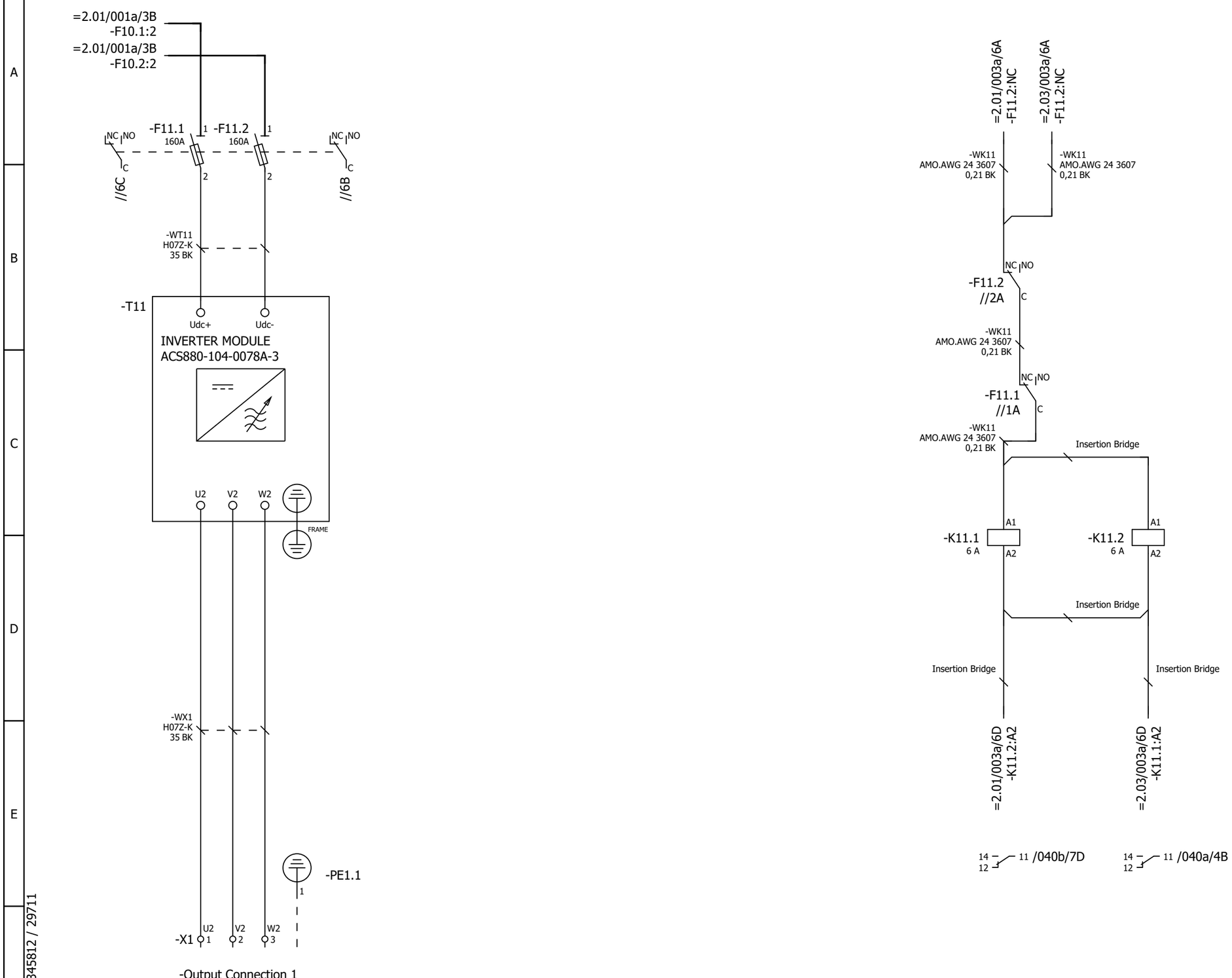

P345812 / 29711

Cust. Doc. No.	Prep. Sky-Xin Zhang 02.08.2023	Title MAIN CIRCUIT	Circuit diagram EFS2
Cust. Ref. No.	App.	INV2.02	SAP Doc. No.
Customer WMMP	Project Zhaka Jack-up Lift System	ACS880-107-0078A-3	EPLAN Doc. No. 3ABDC230674 - 2.02
	Zhaka Jack-up Lift System-1	400V	ABB Ref. No.
			Resp. Dept.

Item Des.
= 2.02
+ 2.01.1

Rev. .1 Sheet 003a
Cont. 013a

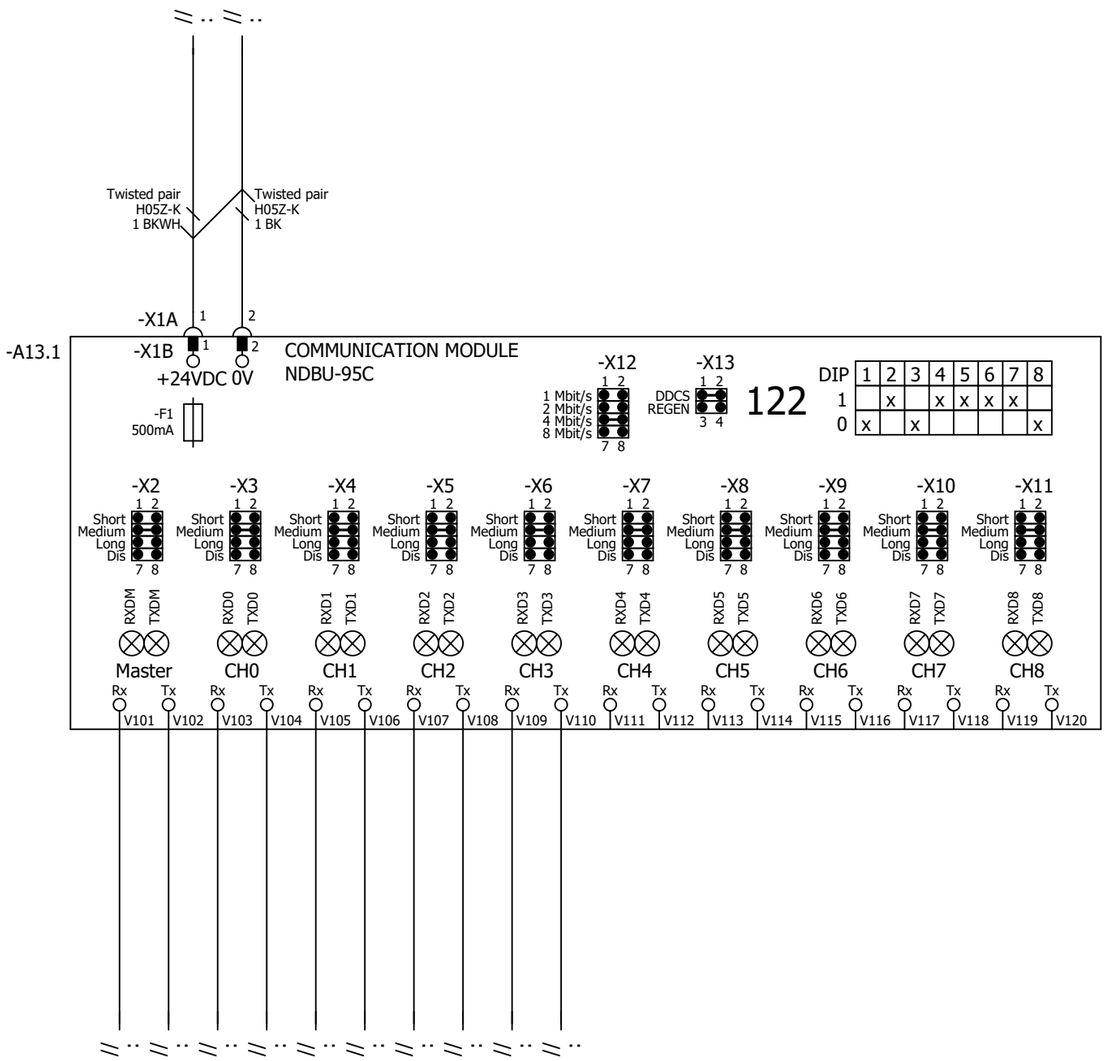

P345812 / 29711

Cust. Doc. No.	Prep. Sky-Xin Zhang 02.08.2023	Title DDCS BRANCHING UNIT	Circuit diagram EFS2	Item Des.	
Cust. Ref. No.	App.	INV2.02	SAP Doc. No.	= 2.02	
Customer WMMP	Project Zhaka Jack-up Lift System	ACS880-107-0078A-3	EPLAN Doc. No. 3ABDC230674 - 2.02	+ 2.01.1	
	Zhaka Jack-up Lift System-1	400V	ABB Ref. No.	Rev. .1	Sheet 013a
			Resp. Dept.	Cont.	040a

Control and status signals	Terminal	Pin
E-STOP FEEDBACK 1 - ESTOP ACTIVE	-XRO1	12
RUNNING 1 - RUNNING	-XRO2	22
FAULT (-1) 1 - NO FAULT	-XRO3	32

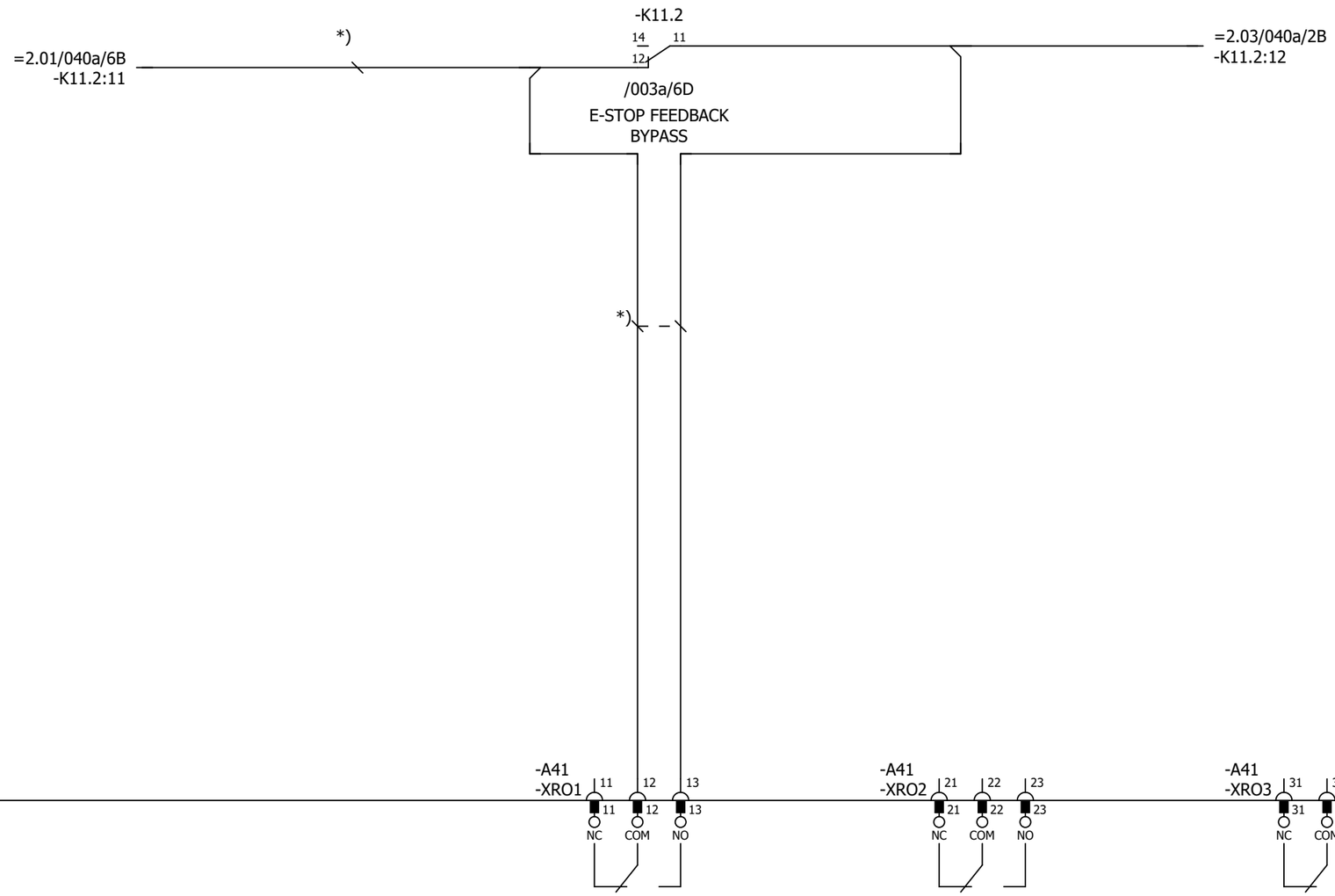

P345812 / 29711

Cust. Doc. No.	Prep. Sky-Xin Zhang 02.08.2023	Title CONTROL BOARD INV2.02 ACS880-107-0078A-3 400V	Circuit diagram EFS2
Cust. Ref. No.	App.		SAP Doc. No.
Customer WMMP	Project Zhaka Jack-up Lift System Zhaka Jack-up Lift System-1		EPLAN Doc. No. 3ABDC230674 - 2.02
			ABB Ref. No.
			Resp. Dept.

Item Des.
= 2.02
+ 2.01.1

Rev. .1 Sheet 040a
Cont. 040b

Control and status signals	Terminal	Pin
DIGITAL INTERLOCK	-XD24	1
START/STOP 1 - START	-XDI	1
FORWARD/REVERSE 1 - REVERSE	-XDI	2
RESET	-XDI	3
EMERGENCY STOP 0 - ACTIVE	-XDI	4
NOT SPECIFIED	-XDI	5
DI6 NOT IN USE	-XDI	6
OUTPUT: READY	-XDIO	1
OUTPUT: RUNNING	-XDIO	2

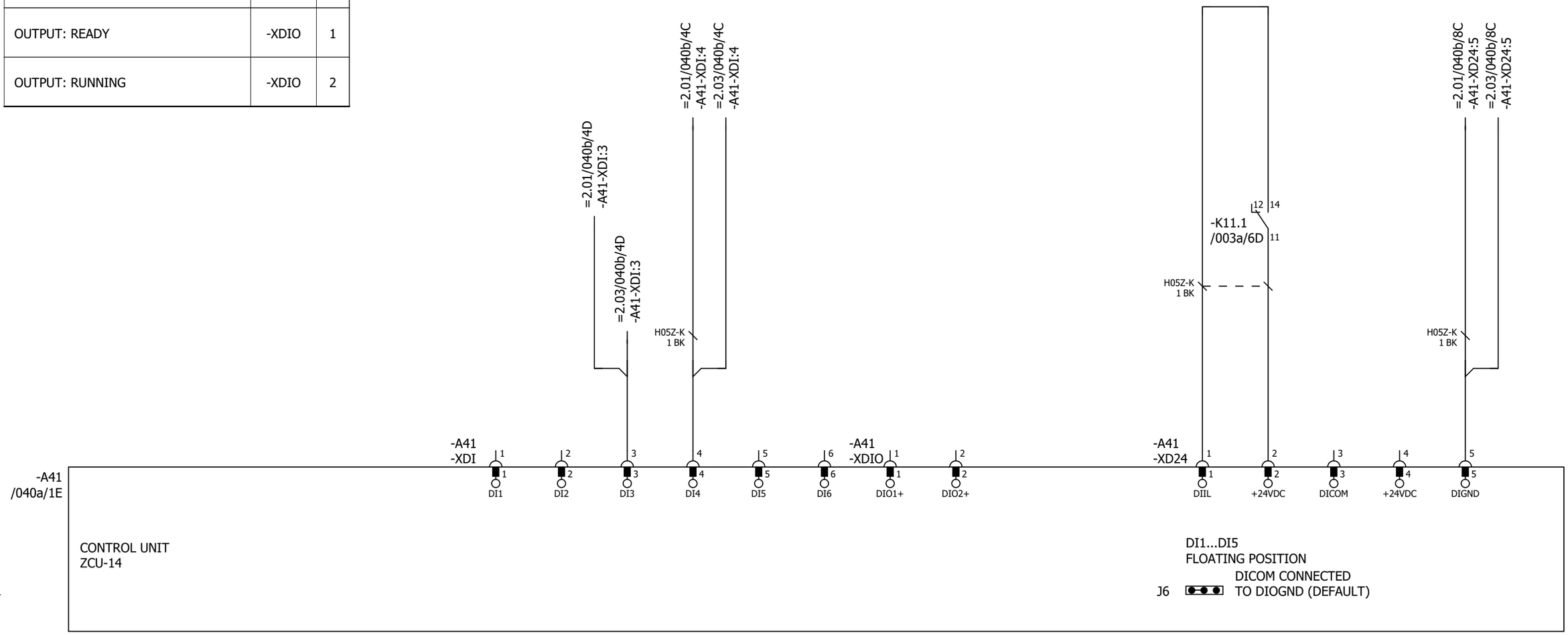

Cust. Doc. No.	Prep. Sky-Xin Zhang 02.08.2023	Title CONTROL BOARD INV2.02 ACS880-107-0078A-3 400V	Circuit diagram EFS2	Item Des.	
Cust. Ref. No.	App.		SAP Doc. No.	= 2.02 + 2.01.1	
Customer WMMP	Project Zhaka Jack-up Lift System Zhaka Jack-up Lift System-1		EPLAN Doc. No. 3ABDC230674 - 2.02		
			ABB Ref. No.	Rev. .1	Sheet 040b
			Resp. Dept.	Cont.	040c

Control and status signals	Terminal	Pin
MOTOR TEMP. MONITORING 0(2)…10V	-XAI	4
AI2 NOT SPECIFIED BY DEFAULT NOT IN USE 0(4)…20mA	-XAI	6
CURR SOU MOT TEMP MONIT 0(4)...20mA	-XAO	1
CURRENT 0(4)…20mA ↔ 0(4)…MOTOR CURRENT	-XAO	3

P345812 / 29711

Cust. Doc. No.	Prep. Sky-Xin Zhang 02.08.2023	Title CONTROL BOARD INV2.02 ACS880-107-0078A-3 400V	Circuit diagram EFS2
Cust. Ref. No.	App.		SAP Doc. No.
Customer WMMP	Project Zhaka Jack-up Lift System Zhaka Jack-up Lift System-1		EPLAN Doc. No. 3ABDC230674 - 2.02
			ABB Ref. No.
			Resp. Dept.

Item Des.
= 2.02
+ 2.01.1

Rev. .1 Sheet 040c
Cont. 040d

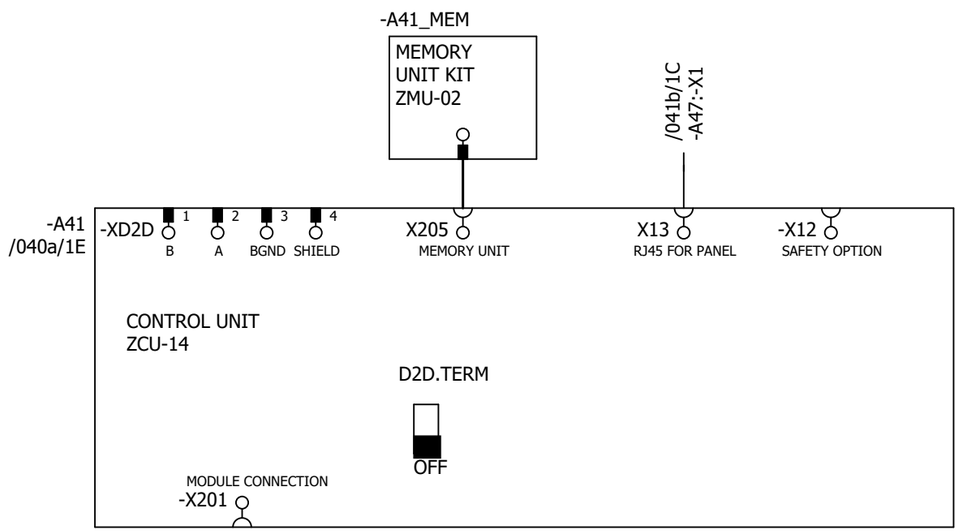

P345812 / 29711

Cust. Doc. No.	Prep. Sky-Xin Zhang 02.08.2023	Title CONTROL BOARD INV2.02 ACS880-107-0078A-3 400V	Circuit diagram EFS2
Cust. Ref. No.	App.		SAP Doc. No.
Customer WMMP	Project Zhaka Jack-up Lift System Zhaka Jack-up Lift System-1		EPLAN Doc. No. 3ABDC230674 - 2.02
			ABB Ref. No.
			Resp. Dept.

Item Des.	= 2.02 + 2.01.1
Rev. .1	Sheet 040d
Cont.	041a

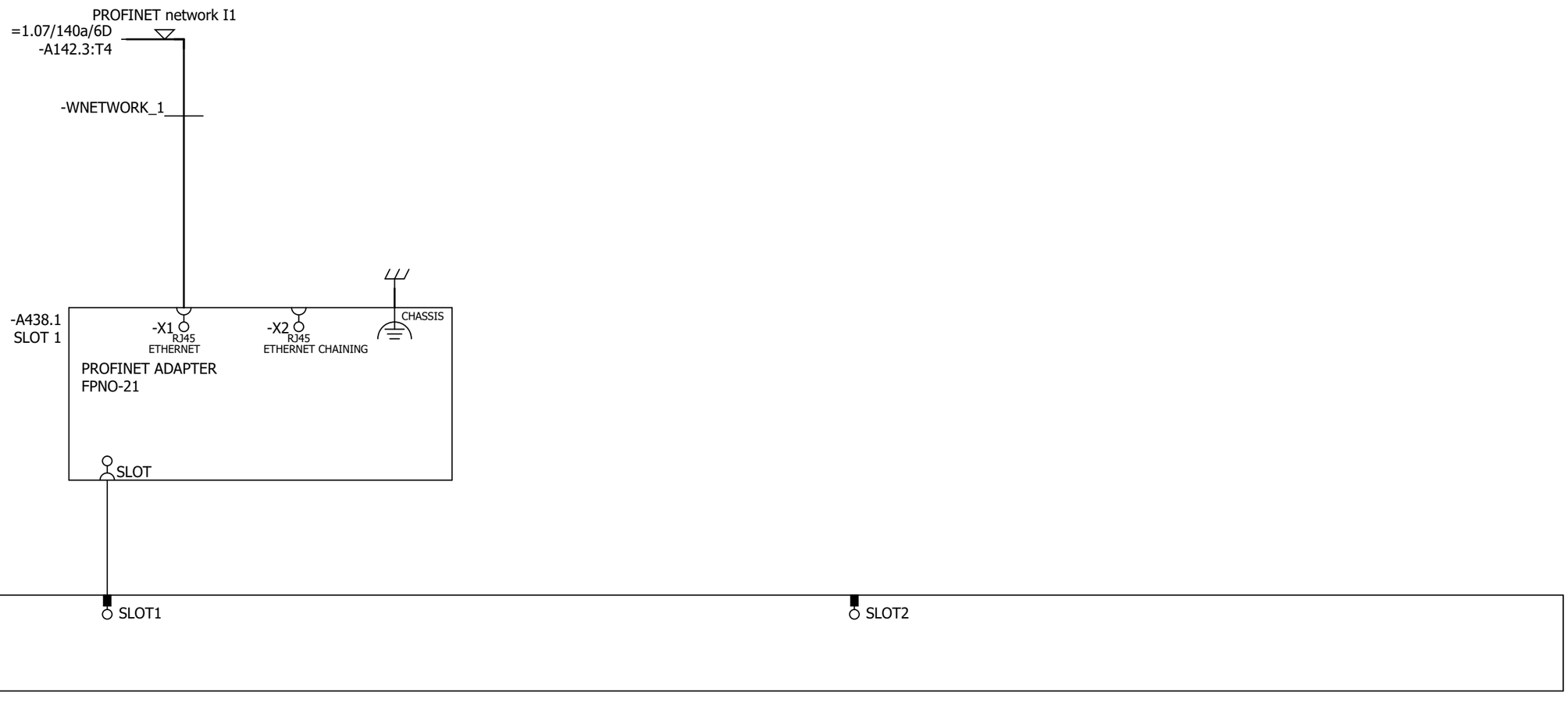

Cust. Doc. No.	Prep. Sky-Xin Zhang 02.08.2023	Title OPTION CARDS INV2.02 ACS880-107-0078A-3 400V	Circuit diagram EFS2
Cust. Ref. No.	App.		SAP Doc. No.
Customer WMMP	Project Zhaka Jack-up Lift System Zhaka Jack-up Lift System-1		EPLAN Doc. No. 3ABDC230674 - 2.02
			ABB Ref. No.
			Resp. Dept.

Item Des.
= 2.02
+ 2.01.1

Rev. .1 Sheet 041a
Cont. 041b

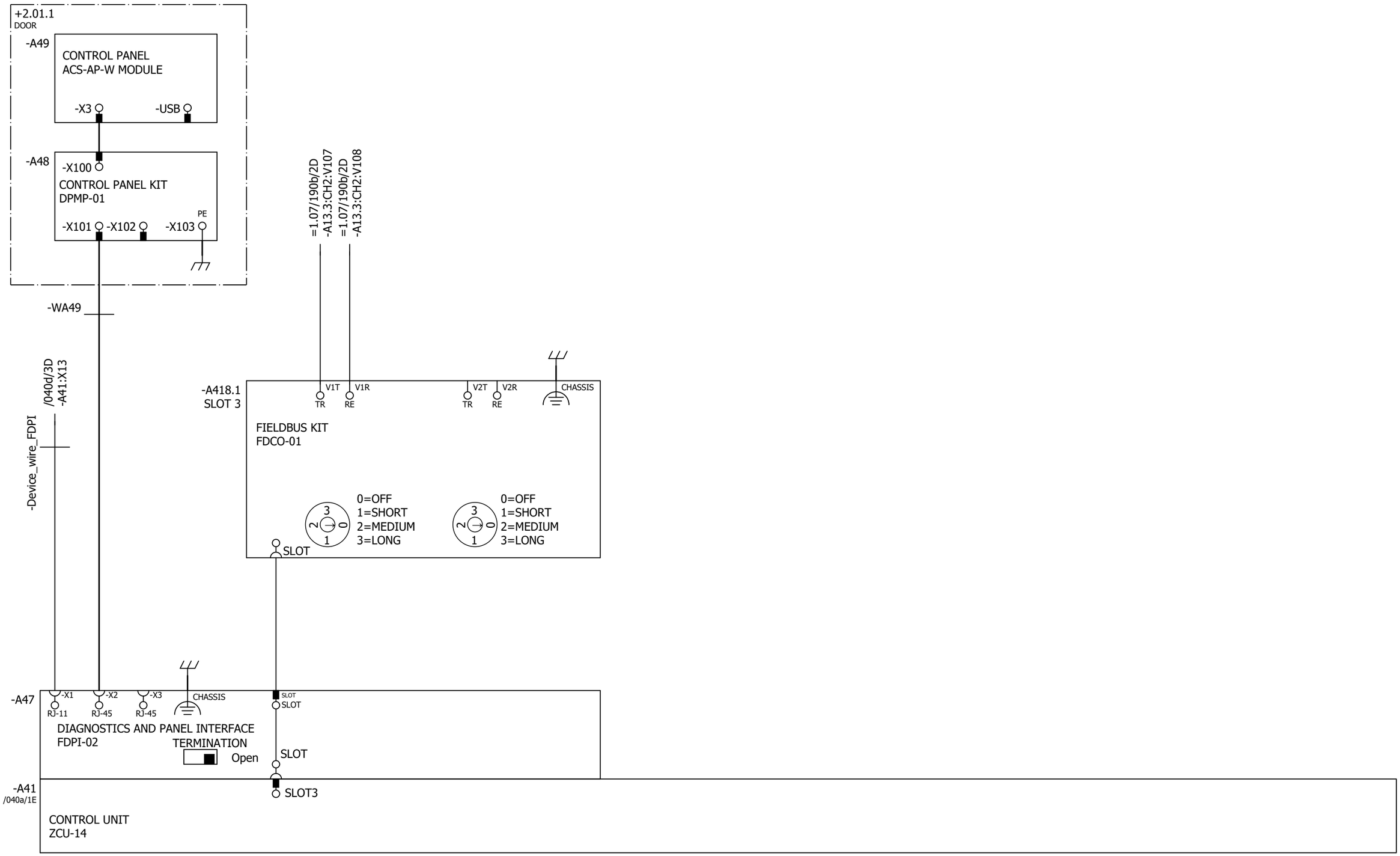

Cust. Doc. No.	Prep. Sky-Xin Zhang 02.08.2023	Title OPTION CARDS	Circuit diagram EFS2	Item Des.	
Cust. Ref. No.	App.	INV2.02	SAP Doc. No.	= 2.02	
Customer WMMP	Project Zhaka Jack-up Lift System	ACS880-107-0078A-3	EPLAN Doc. No. 3ABDC230674 - 2.02	+ 2.01.1	
	Zhaka Jack-up Lift System-1	400V	ABB Ref. No.	Rev. .1	Sheet 041b
			Resp. Dept.	Cont.	061a

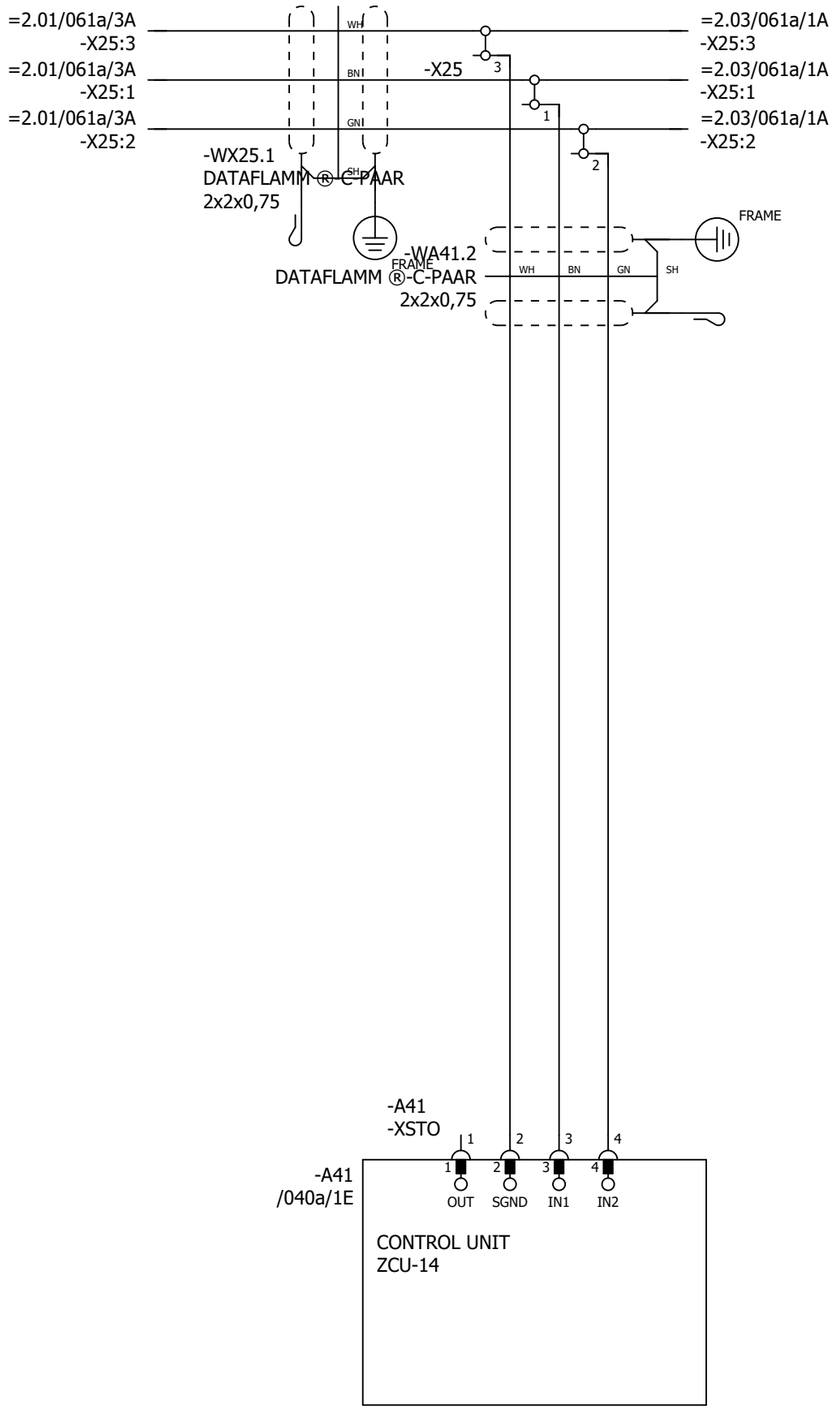

P345812 / 29711

SAFETY CIRCUIT
MACRO REVISION 6
RULES CONVERTED 19.7.2023

Cust. Doc. No.	Prep. Sky-Xin Zhang 02.08.2023	Title SAFETY CIRCUIT INV2.02 ACS880-107-0078A-3 400V	Circuit diagram EFS2
Cust. Ref. No.	App.		SAP Doc. No.
Customer WMMP	Project Zhaka Jack-up Lift System Zhaka Jack-up Lift System-1		EPLAN Doc. No. 3ABDC230674 - 2.02
			ABB Ref. No.
			Resp. Dept.

Item Des.
= 2.02
+ 2.01.1

Rev. .1 Sheet 061a

Cont. &MPC/Part list_1

Part list: 3ABDC230674DU02014

Item	Sort String	Qty.Str	Unit	Component Number	Description and text	Technical data
0010		1.000	ST		ACS880-107-0078A-3+A012+B053+C121+C132+	
0020		1.000	ST		_C206+E210+F272+F287+F288+G300+G307+G315	
0030		1.000	ST		_+G320+G330+G344+H352+H367+J400+K492+L50	
0040		1.000	ST		_3+P913+Q964	
0050		1.000	ST		=2.02	
0060		1.000	ST		+2.01.1,INU3	
0070		1.000	ST		Powerconversionequipment	
0080	-A41_MEM	1.000	PC	3AXD50000006010	MEMORY UNIT KIT ZMU-02	
0090	-T11	1.000	PC	3AUA0000120009-M	ACS880-104-0078A-3+P922	+P922
0100	SCREW	1.000	PC	3AFE68681481	SCREW K30X10 TORX	PT WN1452 ZN
0110	SOFTWARE	1.000	PC	3AUA0000153462	SOFTWARE PRIMARY CONTROL PROGRA	AINF6 FOR ZCU-12/14
0120		1.000	ST		R4imoduleDCfuse	
0130	-F11.1-2	2.000	PC	3AXD50000000219	FUSE FR27UQ69V160T/160A	6.921 CP URQ 27X60MM FERRULE;AR
0140		1.000	ST		R3i-R4imoduleDCfusebase	
0150	(-F11.1-2)	2.000	PC	3AUA0000089227	FUSE HOLDER FUSE BASE US271MI 150A	FUSE BASE US271MI 150A 800V
0160		1.000	ST		motorterminalR4i,coppercable	
0170	-X1	1.000	PC	3ABD50000000270	CONNECTOR PPAC-50	50 MM2;150 A;800V
0180	-X1	1.000	PC	3ABD50000000270	CONNECTOR PPAC-50	50 MM2;150 A;800V
0190	-X1	1.000	PC	3ABD50000000270	CONNECTOR PPAC-50	50 MM2;150 A;800V
0200		1.000	ST		24VDCsupplyZCU	
0210	-WA41_1	1.000	PC	3AXD50000005218	WIRE HARNESS 24VDC SUPPLY X51 ZCU V	HALOGEN FREE;X51_A51
0220		1.000	ST		Rooffancontrol	
0230	-WA41_3	1.000	PC	3AXD50000002688	WIRE HARNESS FAN CONTROL MAIN WIRE	HALOGEN FREE;X208_X26.3
0240		1.000	ST		Toprowmodulewireharness	
0250	-WT11	1.000	PC	3AXD50000002256	WIRE HARNESS R4I FUSE_MODULE V2	HALOGEN FREE;MAIN CIRCUIT WIRE SET
0260	-WX1	1.000	PC	3AXD50000002258	WIRE HARNESS R4I MODULE_OUTPUT TR V	HALOGEN FREE;MAIN CIRCUIT WIRE SET
0270		1.000	ST		Optionmodule	
0280	-A418.1	1.000	PC	3AUA0000107392	COMMUNIC. ADAPTER FDCO-01	
0290		1.000	ST		Controlpanel	
0300	-A47	1.000	PC	3AUA0000108650	FIELDBUS KIT FDPI-02	PANEL BUS ADAPTER
0310	-A48	1.000	PC	3AUA0000108878	CONTROL PANEL KIT DPMP-01	DPMP-01
0320	-A49	1.000	PC	3AXD50000025964	CONTROL PANEL ACS-AP-W MODULE	ASSISTANT PANEL WIRELESS CPU1
0330		1.000	ST		DCfusesupervision	

P345812 / 29711

Cust. Doc. No.	Prep.	Title PART LIST INV2.02 ACS880-107-0078A-3 400V	Item Des. = 2.02 +
Cust. Ref. No.	App.		SAP Doc. No.
Customer WMMP	Project Zhaka Jack-up Lift System Zhaka Jack-up Lift System-1		EPLAN Doc. No. 3ABDC230674 - 2.02
			ABB Ref. No. / Rev. / Sheet Part list_1
			Resp. Dept. / Cont. Part list_2

Part list: 3ABDC230674DU02014

Item	Sort String	Qty.Str	Unit	Component Number	Description and text	Technical data
0340	-K11.1-2	2.000	PC	3AXD50000021313	RELAY DEK_REL_G24/21	250 V;6 A;COIL 24VDC
0350		1.000	ST		FieldBus	
0360	-A438.1	1.000	PC	3AXD50000192779	OPTION MODULE FPNO-21	PROFINET IO
0370		1.000	ST		Supplementtorelay	
0380	(-K11.1)	1.000	PC	3AXD50000021312	TERMINAL BLOCK ST EB2_DIK_RD 2716693	2POLE, 6,15 MM PITCH;FOR DEK RELAYS

P345812 / 29711

Cust. Doc. No.	Prep.	Title PART LIST INV2.02 ACS880-107-0078A-3 400V	Item Des. = 2.02 +
Cust. Ref. No.	App.		SAP Doc. No.
Customer WMMP	Project Zhaka Jack-up Lift System Zhaka Jack-up Lift System-1		EPLAN Doc. No. 3ABDC230674 - 2.02
			ABB Ref. No. / Rev. / Sheet Part list_2
			Resp. Dept. / Cont. &EMA/1

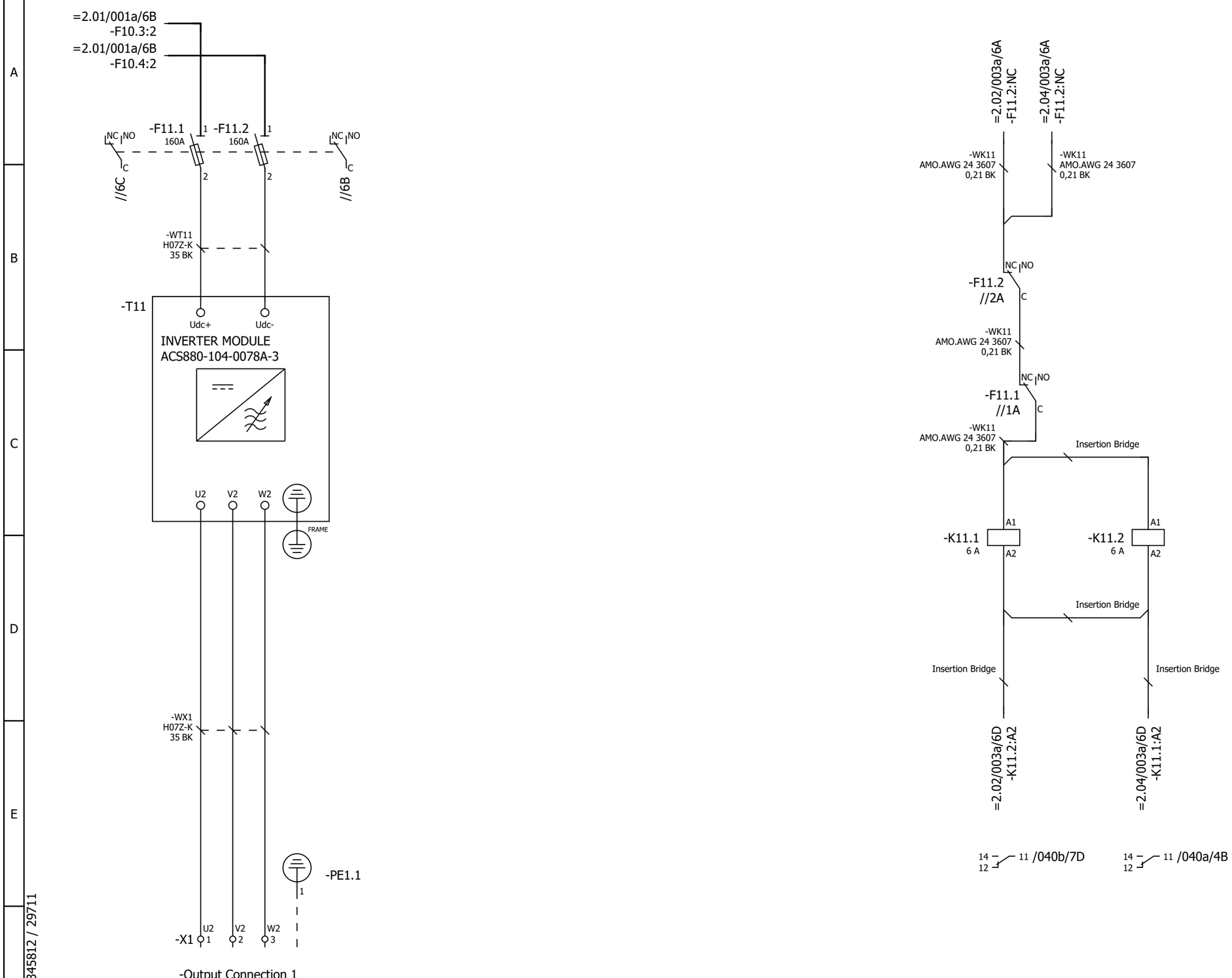

P345812 / 29711

Cust. Doc. No.	Prep. Sky-Xin Zhang 02.08.2023	Title MAIN CIRCUIT	Circuit diagram EFS2
Cust. Ref. No.	App.	INV2.03	SAP Doc. No.
Customer WMMP	Project Zhaka Jack-up Lift System	ACS880-107-0078A-3	EPLAN Doc. No. 3ABDC230674 - 2.03
	Zhaka Jack-up Lift System-1	400V	ABB Ref. No.
			Resp. Dept.

Item Des.
= 2.03
+ 2.01.1

Rev. .1 Sheet 003a
Cont. 040a

Control and status signals	Terminal	Pin
E-STOP FEEDBACK 1 - ESTOP ACTIVE	-XRO1	12
RUNNING 1 - RUNNING	-XRO2	22
FAULT (-1) 1 - NO FAULT	-XRO3	32

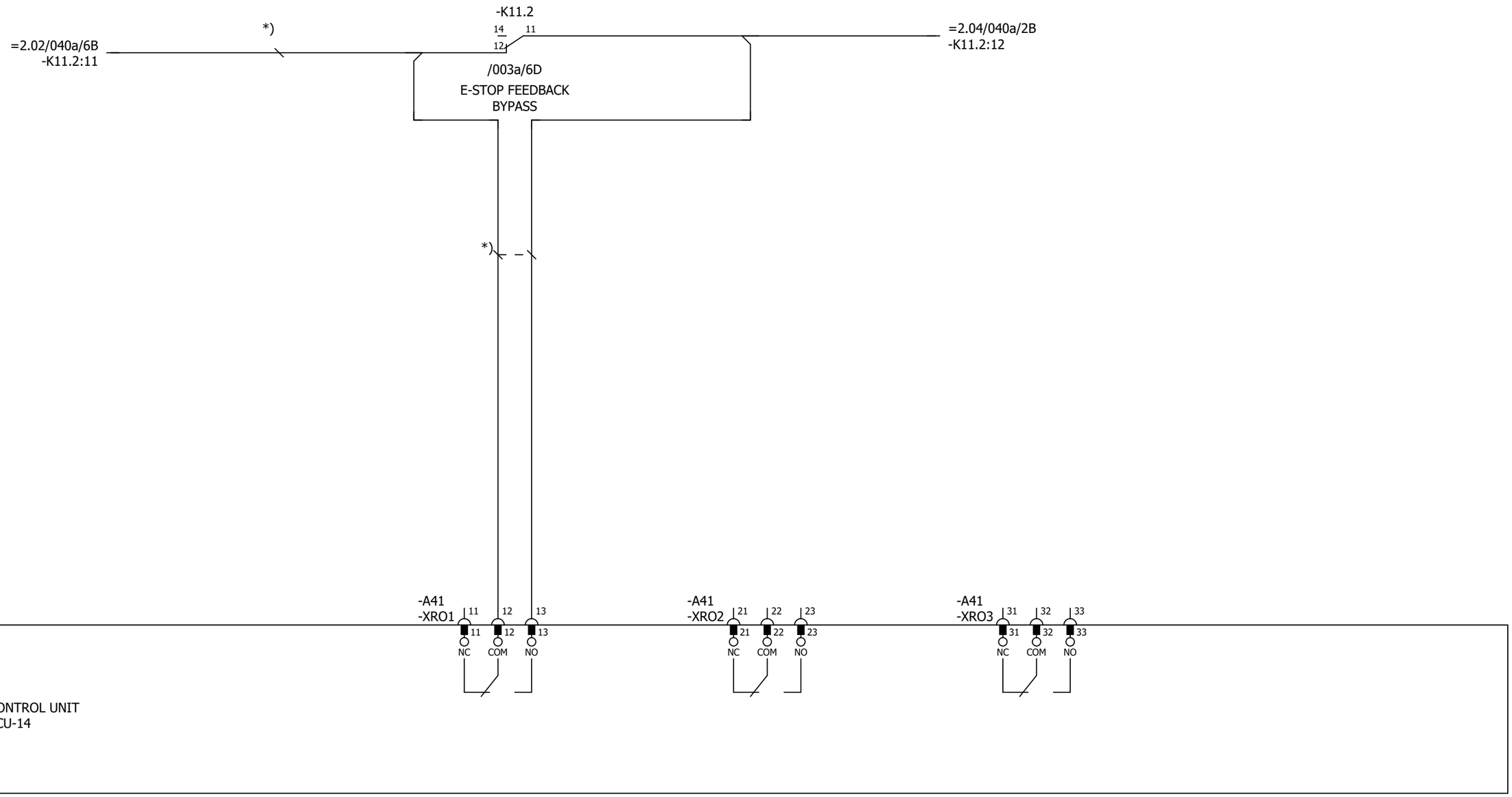

Cust. Doc. No.	Prep. Sky-Xin Zhang 02.08.2023	Title CONTROL BOARD INV2.03 ACS880-107-0078A-3 400V	Circuit diagram EFS2	Item Des. = 2.03 + 2.01.1
Cust. Ref. No.	App.		SAP Doc. No.	
Customer WMMP	Project Zhaka Jack-up Lift System Zhaka Jack-up Lift System-1		EPLAN Doc. No. 3ABDC230674 - 2.03	
			ABB Ref. No.	Rev. .1 Sheet 040a
			Resp. Dept.	Cont. 040b

Control and status signals	Terminal	Pin
DIGITAL INTERLOCK	-XD24	1
START/STOP 1 - START	-XDI	1
FORWARD/REVERSE 1 - REVERSE	-XDI	2
RESET	-XDI	3
EMERGENCY STOP 0 - ACTIVE	-XDI	4
NOT SPECIFIED	-XDI	5
DI6 NOT IN USE	-XDI	6
OUTPUT: READY	-XDIO	1
OUTPUT: RUNNING	-XDIO	2

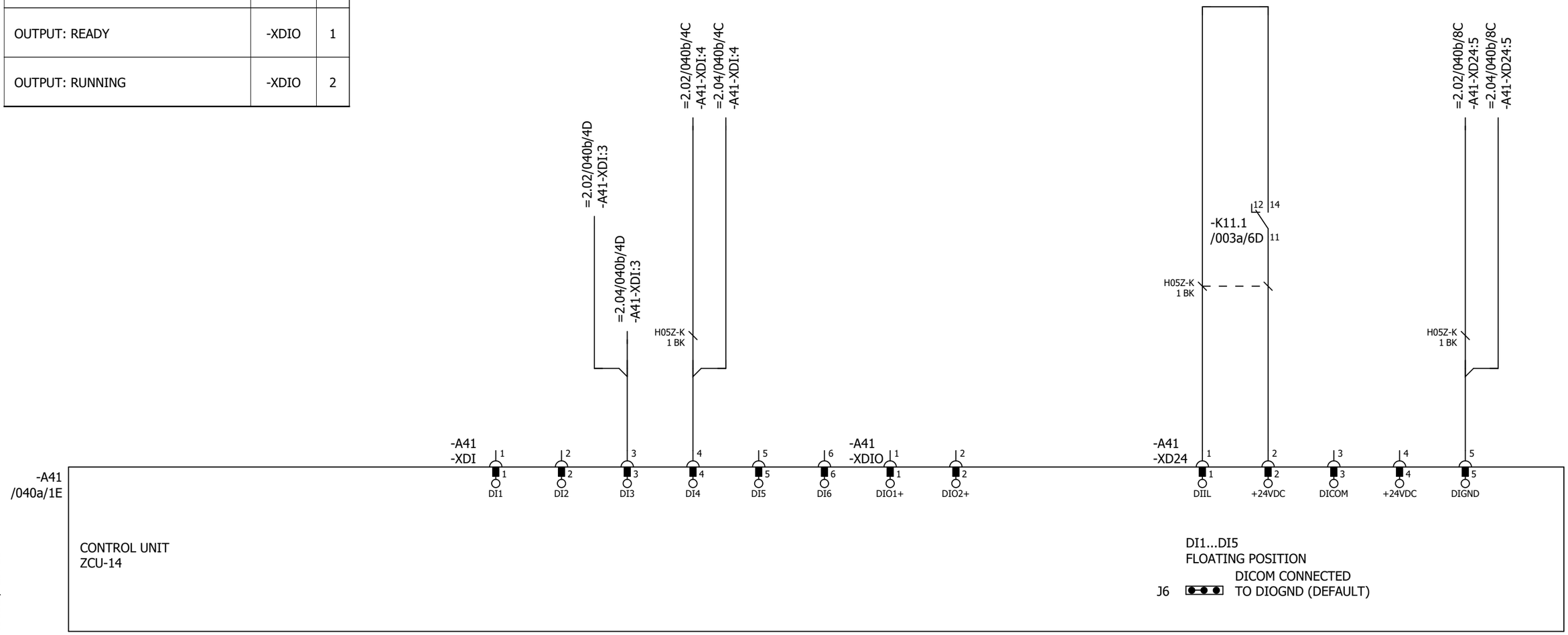

Cust. Doc. No.	Prep. Sky-Xin Zhang 02.08.2023	Title CONTROL BOARD INV2.03 ACS880-107-0078A-3 400V	Circuit diagram EFS2	Item Des.	
Cust. Ref. No.	App.		SAP Doc. No.	= 2.03 + 2.01.1	
Customer WMMP	Project Zhaka Jack-up Lift System Zhaka Jack-up Lift System-1	ABB	EPLAN Doc. No. 3ABDC230674 - 2.03		
			ABB Ref. No.	Rev. .1	Sheet 040b
			Resp. Dept.	Cont.	040c

Control and status signals	Terminal	Pin
MOTOR TEMP. MONITORING 0(2)…10V	-XAI	4
AI2 NOT SPECIFIED BY DEFAULT NOT IN USE 0(4)…20mA	-XAI	6
CURR SOU MOT TEMP MONIT 0(4)...20mA	-XAO	1
CURRENT 0(4)…20mA ↔ 0(4)…MOTOR CURRENT	-XAO	3

P345812 / 29711

Cust. Doc. No.	Prep. Sky-Xin Zhang 02.08.2023	Title CONTROL BOARD INV2.03 ACS880-107-0078A-3 400V	Circuit diagram EFS2
Cust. Ref. No.	App.		SAP Doc. No.
Customer WMMP	Project Zhaka Jack-up Lift System Zhaka Jack-up Lift System-1		EPLAN Doc. No. 3ABDC230674 - 2.03
			ABB Ref. No.
			Resp. Dept.

Item Des.
= 2.03
+ 2.01.1

Rev. .1 Sheet 040c
Cont. 040d

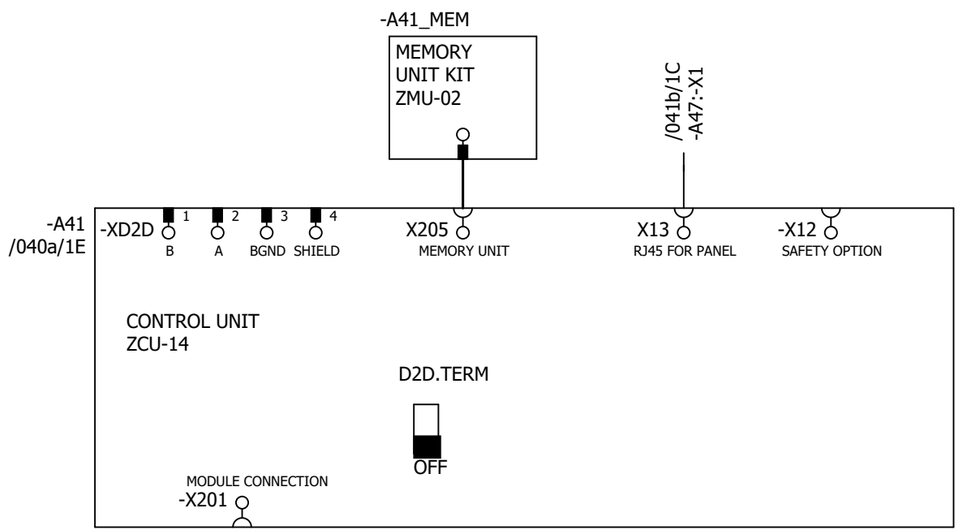

P345812 / 29711

Cust. Doc. No.	Prep. Sky-Xin Zhang 02.08.2023	Title CONTROL BOARD INV2.03 ACS880-107-0078A-3 400V	Circuit diagram EFS2
Cust. Ref. No.	App.		SAP Doc. No.
Customer WMMP	Project Zhaka Jack-up Lift System Zhaka Jack-up Lift System-1		EPLAN Doc. No. 3ABDC230674 - 2.03
			ABB Ref. No.
			Resp. Dept.

Item Des.	= 2.03 + 2.01.1
Rev. .1	Sheet 040d
Cont.	041a

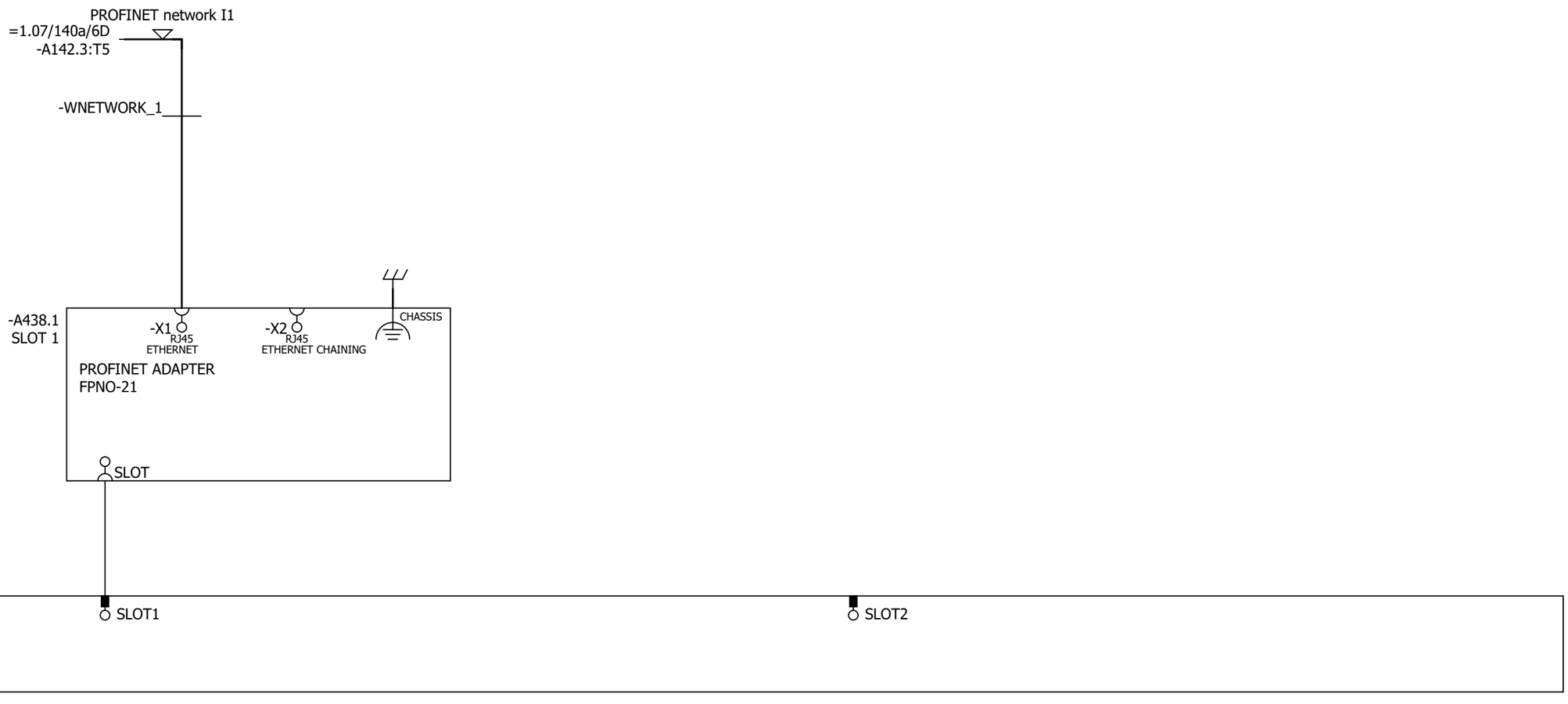

Cust. Doc. No.	Prep. Sky-Xin Zhang 02.08.2023	Title OPTION CARDS INV2.03 ACS880-107-0078A-3 400V	Circuit diagram EFS2
Cust. Ref. No.	App.		SAP Doc. No.
Customer WMMP	Project Zhaka Jack-up Lift System Zhaka Jack-up Lift System-1		EPLAN Doc. No. 3ABDC230674 - 2.03
			ABB Ref. No.
			Resp. Dept.

Item Des.
= 2.03
+ 2.01.1

Rev. .1 Sheet 041a
Cont. 041b

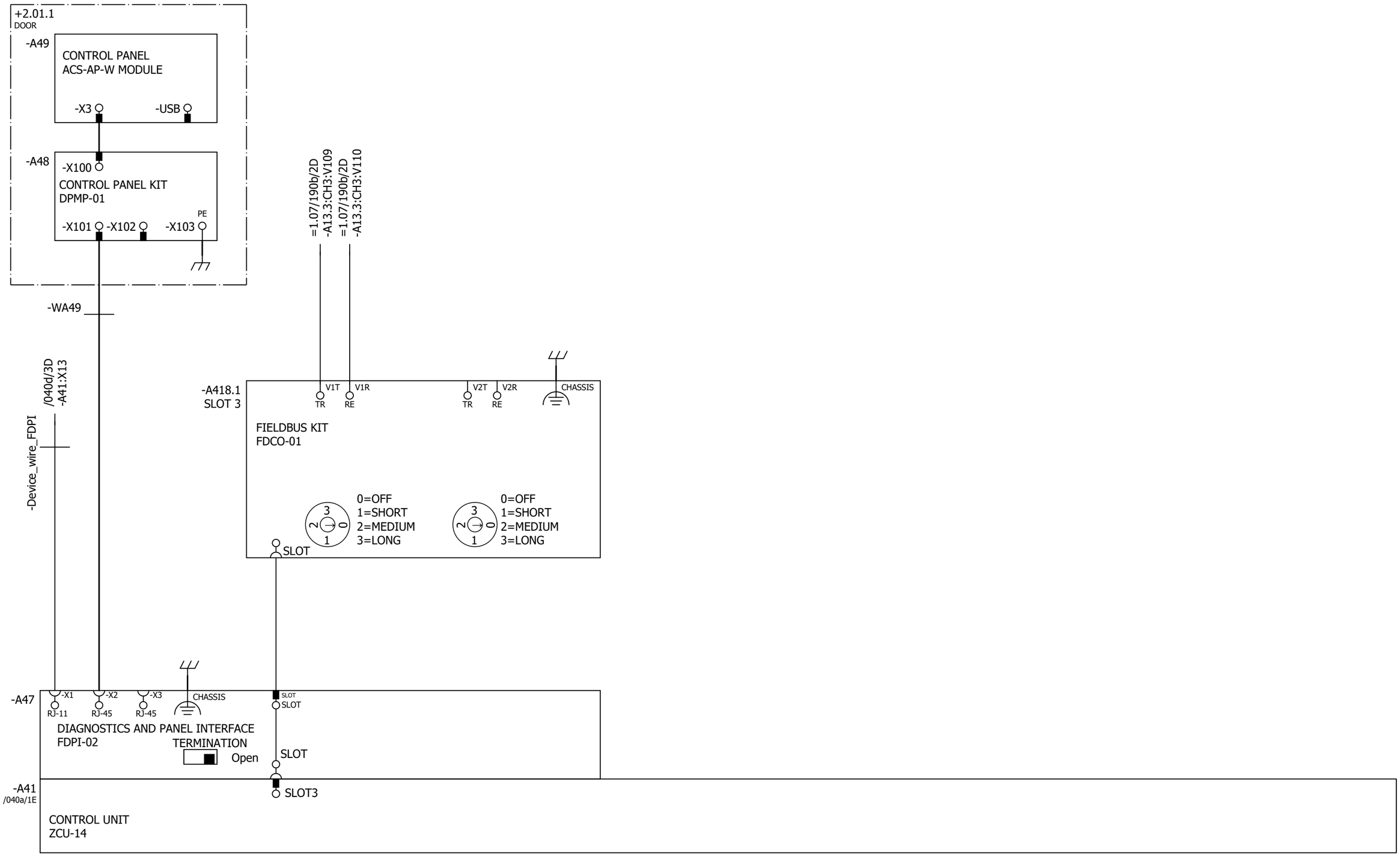

Cust. Doc. No.	Prep. Sky-Xin Zhang 02.08.2023	Title OPTION CARDS	Circuit diagram EFS2	Item Des.
Cust. Ref. No.	App.	INV2.03	SAP Doc. No.	= 2.03
Customer WMMP	Project Zhaka Jack-up Lift System	ACS880-107-0078A-3	EPLAN Doc. No. 3ABDC230674 - 2.03	+ 2.01.1
	Zhaka Jack-up Lift System-1	400V	ABB Ref. No.	Rev. .1 Sheet 041b
			Resp. Dept.	Cont. 061a

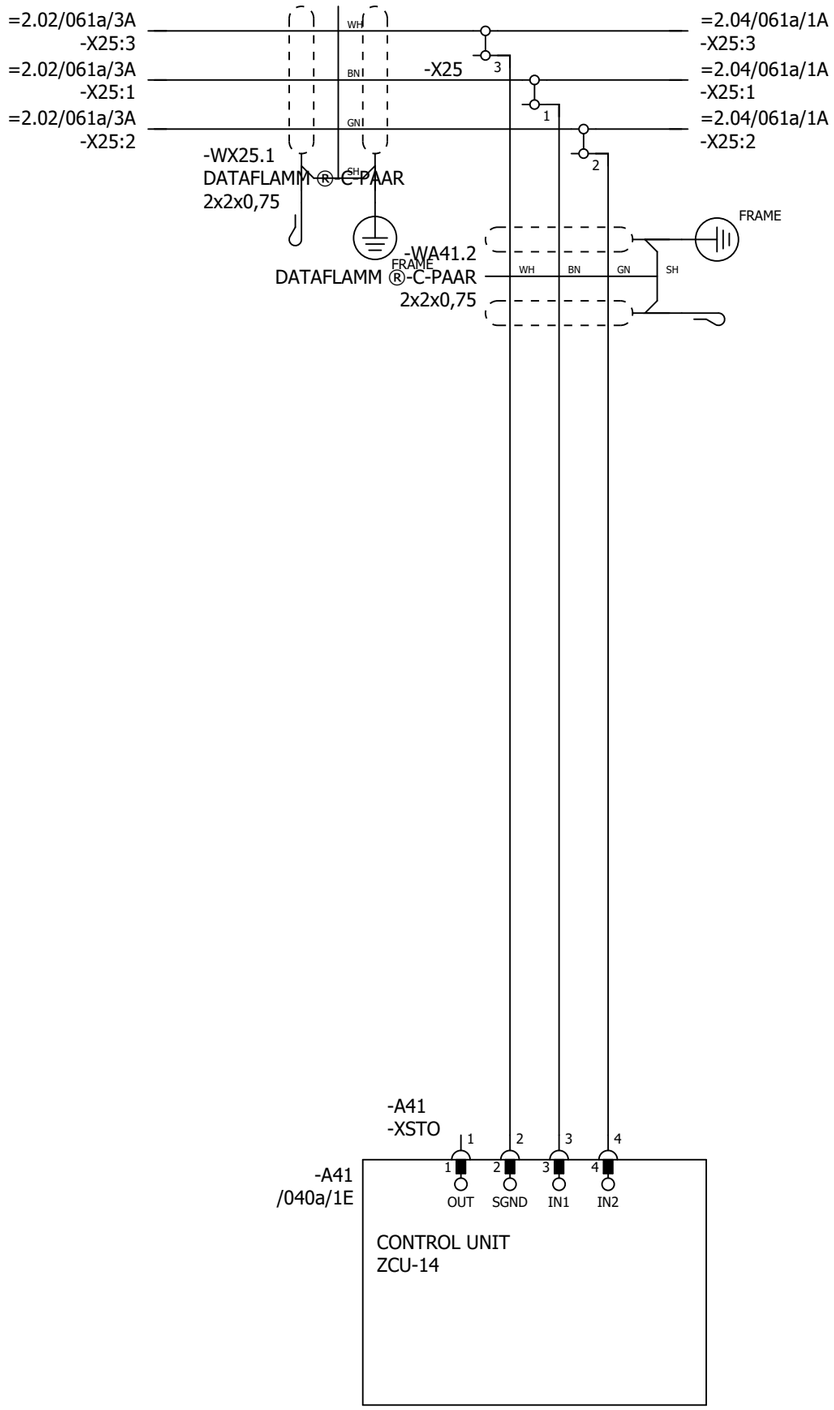

P345812 / 29711

SAFETY CIRCUIT
MACRO REVISION 6
RULES CONVERTED 19.7.2023

Cust. Doc. No.	Prep. Sky-Xin Zhang 02.08.2023	Title SAFETY CIRCUIT INV2.03 ACS880-107-0078A-3 400V	Circuit diagram EFS2
Cust. Ref. No.	App.		SAP Doc. No.
Customer WMMP	Project Zhaka Jack-up Lift System Zhaka Jack-up Lift System-1		EPLAN Doc. No. 3ABDC230674 - 2.03
			ABB Ref. No.
			Resp. Dept.

Item Des.
= 2.03
+ 2.01.1

Rev. .1 Sheet 061a

Cont. &MPC/Part list_1

Part list: 3ABDC230674DU02015

Item	Sort String	Qty.Str	Unit	Component Number	Description and text	Technical data
0010		1.000	ST		ACS880-107-0078A-3+A012+B053+C121+C132+	
0020		1.000	ST		_C206+E210+F272+F287+F288+G300+G307+G315	
0030		1.000	ST		_+G320+G330+G344+H352+H367+J400+K492+K49	
0040		1.000	ST		_3+L503+P913+Q964	
0050		1.000	ST		=2.03	
0060		1.000	ST		+2.01.1,INU3	
0070		1.000	ST		Powerconversionequipment	
0080	-A41_MEM	1.000	PC	3AXD50000006010	MEMORY UNIT KIT ZMU-02	
0090	-T11	1.000	PC	3AUA0000120009-M	ACS880-104-0078A-3+P922	+P922
0100	SCREW	1.000	PC	3AFE68681481	SCREW K30X10 TORX	PT WN1452 ZN
0110	SOFTWARE	1.000	PC	3AUA0000153462	SOFTWARE PRIMARY CONTROL PROGRA	AINF6 FOR ZCU-12/14
0120		1.000	ST		R4imoduleDCfuse	
0130	-F11.1-2	2.000	PC	3AXD50000000219	FUSE FR27UQ69V160T/160A	6.921 CP URQ 27X60MM FERRULE;AR
0140		1.000	ST		R3i-R4imoduleDCfusebase	
0150	(-F11.1-2)	2.000	PC	3AUA0000089227	FUSE HOLDER FUSE BASE US271MI 150A	FUSE BASE US271MI 150A 800V
0160		1.000	ST		motorterminalR4i,coppercable	
0170	-X1	1.000	PC	3ABD50000000270	CONNECTOR PPAC-50	50 MM2;150 A;800V
0180	-X1	1.000	PC	3ABD50000000270	CONNECTOR PPAC-50	50 MM2;150 A;800V
0190	-X1	1.000	PC	3ABD50000000270	CONNECTOR PPAC-50	50 MM2;150 A;800V
0200		1.000	ST		24VDCsupplyZCU	
0210	-WA41_1	1.000	PC	3AXD50000005218	WIRE HARNESS 24VDC SUPPLY X51 ZCU V	HALOGEN FREE;X51_A51
0220		1.000	ST		Rooffancontrol	
0230	-WA41_3	1.000	PC	3AXD50000002688	WIRE HARNESS FAN CONTROL MAIN WIRE	HALOGEN FREE;X208_X26.3
0240		1.000	ST		Toprowmodulewireharness	
0250	-WT11	1.000	PC	3AXD50000002256	WIRE HARNESS R4I FUSE_MODULE V2	HALOGEN FREE;MAIN CIRCUIT WIRE SET
0260	-WX1	1.000	PC	3AXD50000002258	WIRE HARNESS R4I MODULE_OUTPUT TR V	HALOGEN FREE;MAIN CIRCUIT WIRE SET
0270		1.000	ST		Optionmodule	
0280	-A418.1	1.000	PC	3AUA0000107392	COMMUNIC. ADAPTER FDCO-01	
0290		1.000	ST		Controlpanel	
0300	-A47	1.000	PC	3AUA0000108650	FIELDBUS KIT FDPI-02	PANEL BUS ADAPTER
0310	-A48	1.000	PC	3AUA0000108878	CONTROL PANEL KIT DPMP-01	DPMP-01
0320	-A49	1.000	PC	3AXD50000025964	CONTROL PANEL ACS-AP-W MODULE	ASSISTANT PANEL WIRELESS CPU1
0330		1.000	ST		DCfusesupervision	

P345812 / 29711

Cust. Doc. No.	Prep.	Title PART LIST INV2.03 ACS880-107-0078A-3 400V	Item Des. = 2.03 +
Cust. Ref. No.	App.		SAP Doc. No.
Customer WMMP	Project Zhaka Jack-up Lift System Zhaka Jack-up Lift System-1		EPLAN Doc. No. 3ABDC230674 - 2.03
			ABB Ref. No. / Rev. / Sheet Part list_1
			Resp. Dept. / Cont. Part list_2

Part list: 3ABDC230674DU02015

Item	Sort String	Qty.Str	Unit	Component Number	Description and text	Technical data
0340	-K11.1-2	2.000	PC	3AXD50000021313	RELAY DEK_REL_G24/21	250 V;6 A;COIL 24VDC
0350		1.000	ST		Profinetswitch	
0360		1.000	ST		FieldBus	
0370	-A438.1	1.000	PC	3AXD50000192779	OPTION MODULE FPNO-21	PROFINET IO
0380		1.000	ST		Supplementtorelay	
0390	(-K11.1)	1.000	PC	3AXD50000021312	TERMINAL BLOCK ST EB2_DIK_RD 2716693	2POLE, 6,15 MM PITCH;FOR DEK RELAYS

P345812 / 29711

Cust. Doc. No.	Prep.	Title PART LIST INV2.03 ACS880-107-0078A-3 400V	Item Des. = 2.03 +
Cust. Ref. No.	App.		SAP Doc. No.
Customer WMMP	Project Zhaka Jack-up Lift System Zhaka Jack-up Lift System-1		EPLAN Doc. No. 3ABDC230674 - 2.03
			ABB Ref. No. / Rev. / Sheet Part list_2
			Resp. Dept. / Cont. &EMA/1

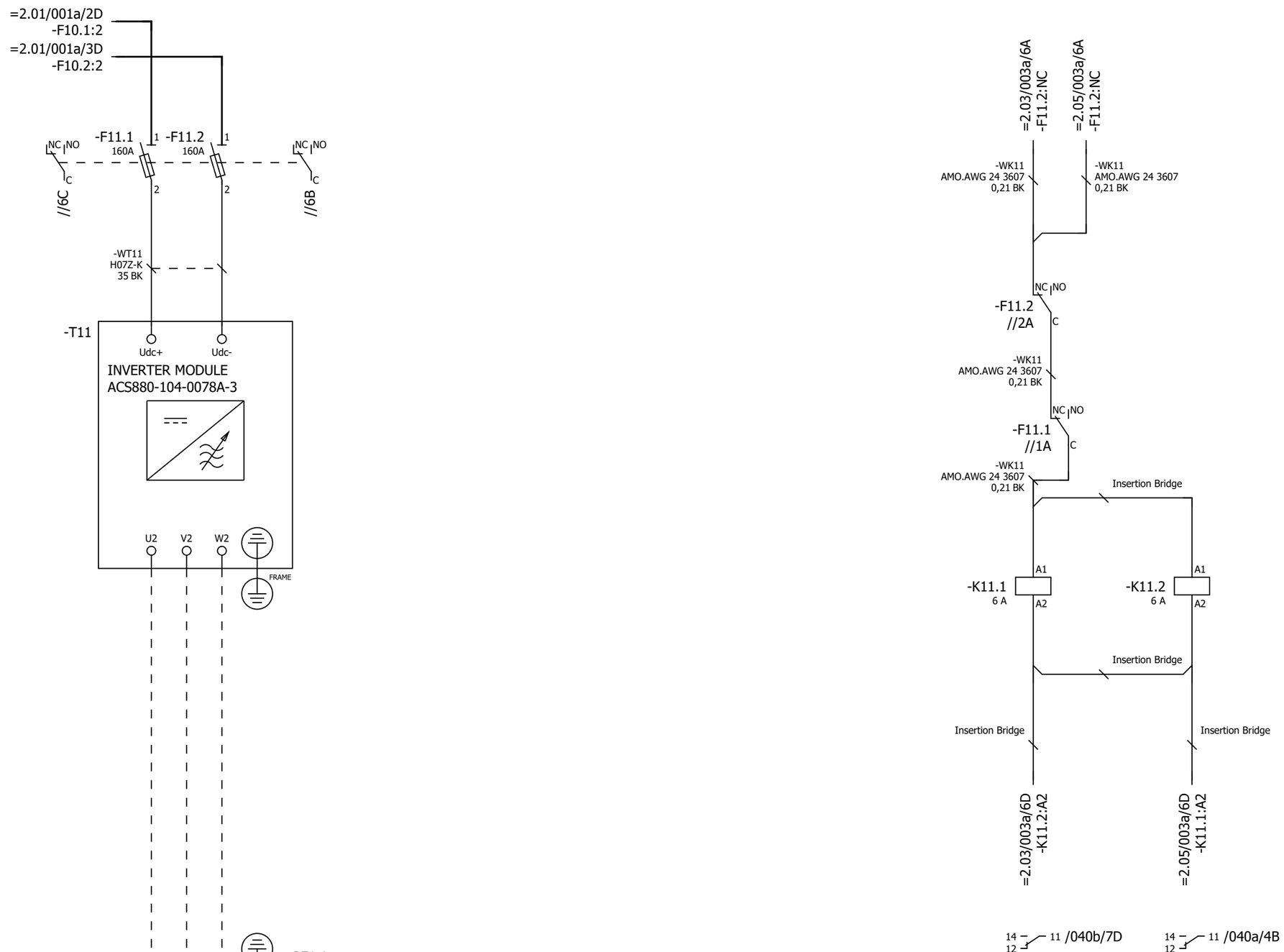

P345812 / 29711

Cust. Doc. No.	Prep. Sky-Xin Zhang 02.08.2023	Title MAIN CIRCUIT	Circuit diagram EFS2
Cust. Ref. No.	App.	INV2.04	SAP Doc. No.
Customer WMMP	Project Zhaka Jack-up Lift System	ACS880-107-0078A-3	EPLAN Doc. No. 3ABDC230674 - 2.04
	Zhaka Jack-up Lift System-1	400V	ABB Ref. No.
			Resp. Dept.

Item Des.
= 2.04
+ 2.01.1

Rev. .1 Sheet 003a
Cont. 040a

Control and status signals	Terminal	Pin
E-STOP FEEDBACK 1 - ESTOP ACTIVE	-XRO1	12
RUNNING 1 - RUNNING	-XRO2	22
FAULT (-1) 1 - NO FAULT	-XRO3	32

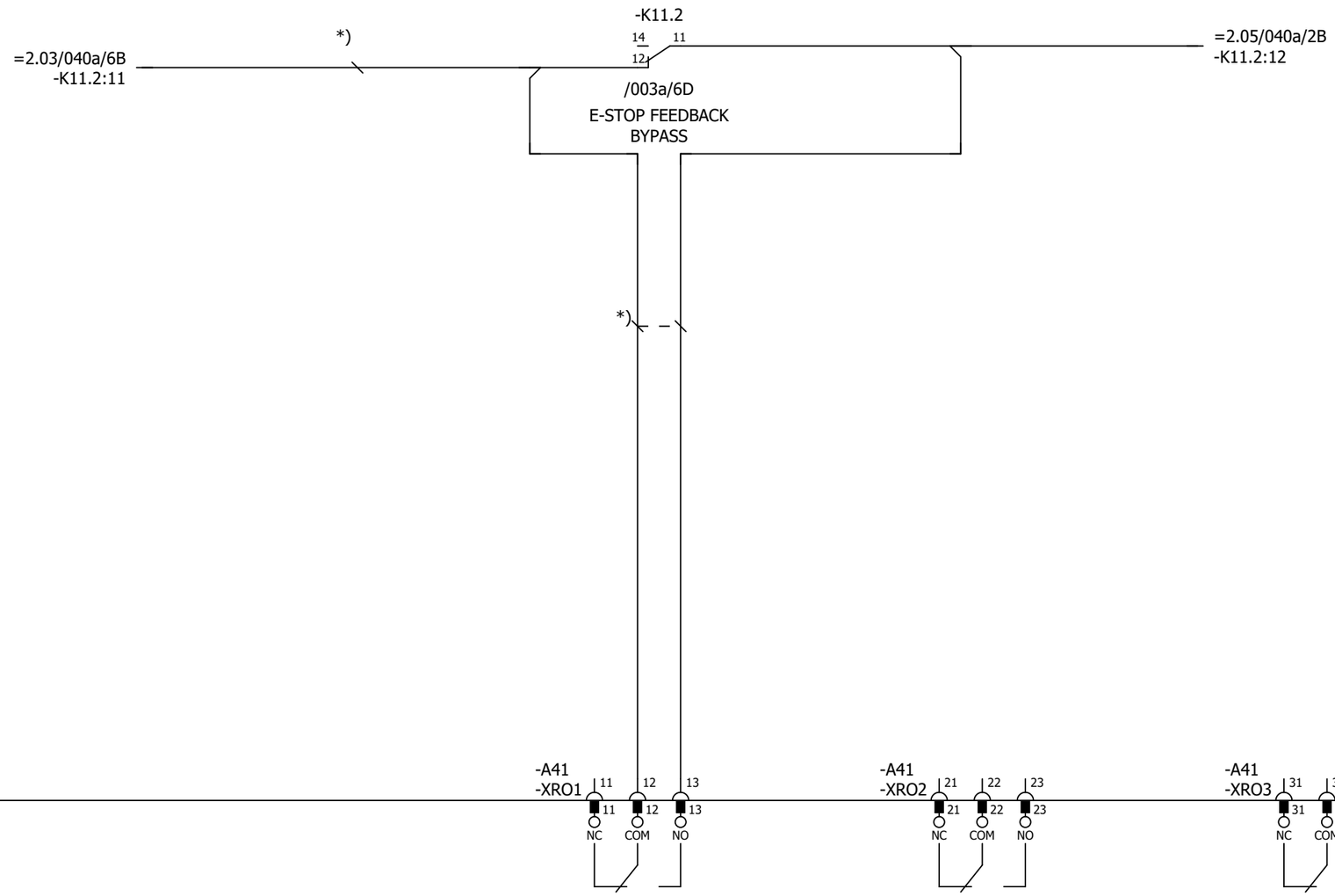

P345812 / 29711

Cust. Doc. No.	Prep. Sky-Xin Zhang 02.08.2023	Title CONTROL BOARD INV2.04 ACS880-107-0078A-3 400V	Circuit diagram EFS2
Cust. Ref. No.	App.		SAP Doc. No.
Customer WMMP	Project Zhaka Jack-up Lift System Zhaka Jack-up Lift System-1		EPLAN Doc. No. 3ABDC230674 - 2.04
			ABB Ref. No.
			Resp. Dept.

Item Des.
= 2.04
+ 2.01.1

Rev. .1 Sheet 040a
Cont. 040b

Control and status signals	Terminal	Pin
DIGITAL INTERLOCK	-XD24	1
START/STOP 1 - START	-XDI	1
FORWARD/REVERSE 1 - REVERSE	-XDI	2
RESET	-XDI	3
EMERGENCY STOP 0 - ACTIVE	-XDI	4
NOT SPECIFIED	-XDI	5
DI6 NOT IN USE	-XDI	6
OUTPUT: READY	-XDIO	1
OUTPUT: RUNNING	-XDIO	2

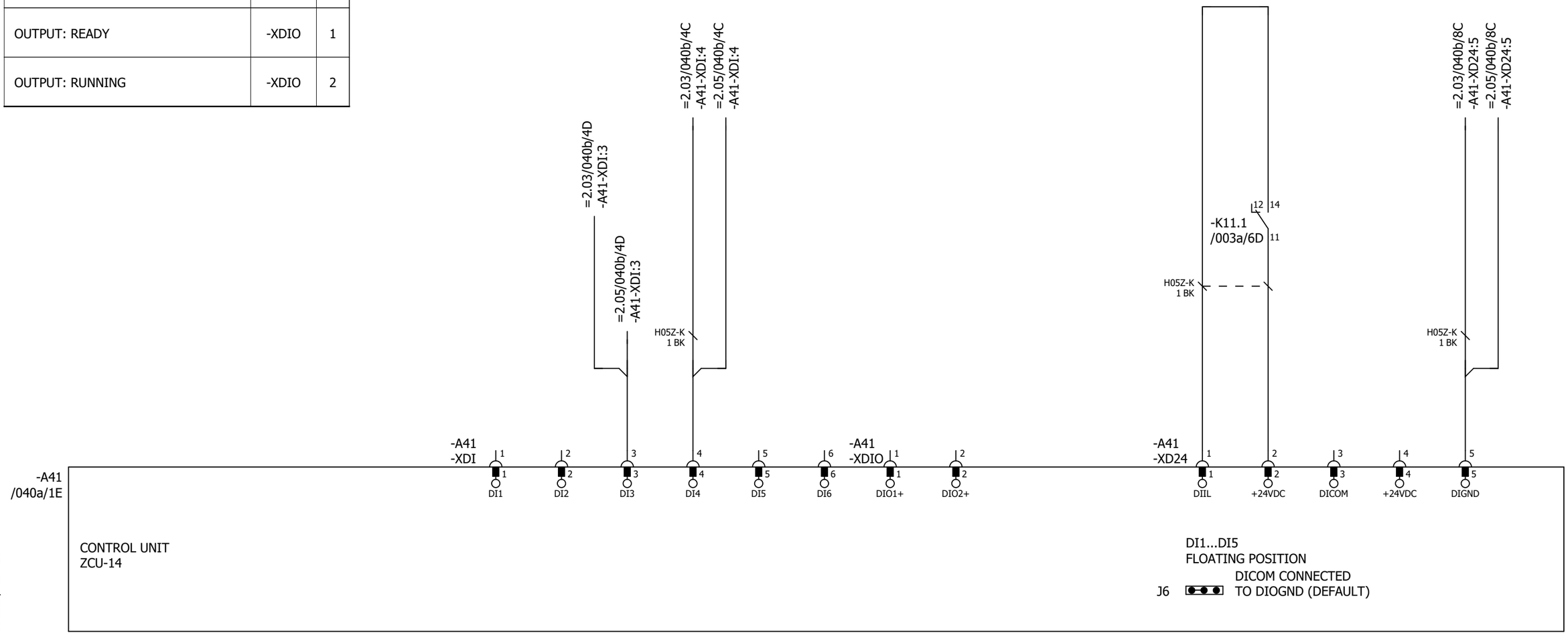

P345812 / 29711

Cust. Doc. No.	Prep. Sky-Xin Zhang 02.08.2023	Title CONTROL BOARD INV2.04 ACS880-107-0078A-3 400V	Circuit diagram EFS2
Cust. Ref. No.	App.		SAP Doc. No.
Customer WMMP	Project Zhaka Jack-up Lift System Zhaka Jack-up Lift System-1		EPLAN Doc. No. 3ABDC230674 - 2.04
			ABB Ref. No.
			Resp. Dept.

Item Des.
= 2.04
+ 2.01.1

Rev. .1 Sheet 040b
Cont. 040c

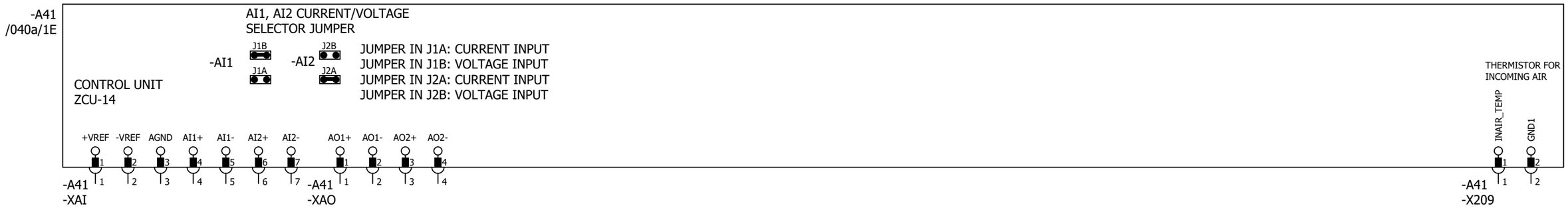

Control and status signals	Terminal	Pin
MOTOR TEMP. MONITORING 0(2)…10V	-XAI	4
AI2 NOT SPECIFIED BY DEFAULT NOT IN USE 0(4)…20mA	-XAI	6
CURR SOU MOT TEMP MONIT 0(4)...20mA	-XAO	1
CURRENT 0(4)…20mA ↔ 0(4)…MOTOR CURRENT	-XAO	3

P345812 / 29711

Cust. Doc. No.	Prep. Sky-Xin Zhang 02.08.2023	Title CONTROL BOARD INV2.04 ACS880-107-0078A-3 400V	Circuit diagram EFS2
Cust. Ref. No.	App.		SAP Doc. No.
Customer WMMP	Project Zhaka Jack-up Lift System Zhaka Jack-up Lift System-1		EPLAN Doc. No. 3ABDC230674 - 2.04
			ABB Ref. No.
			Resp. Dept.

Item Des.
= 2.04
+ 2.01.1

Rev. .1 Sheet 040c
Cont. 040d

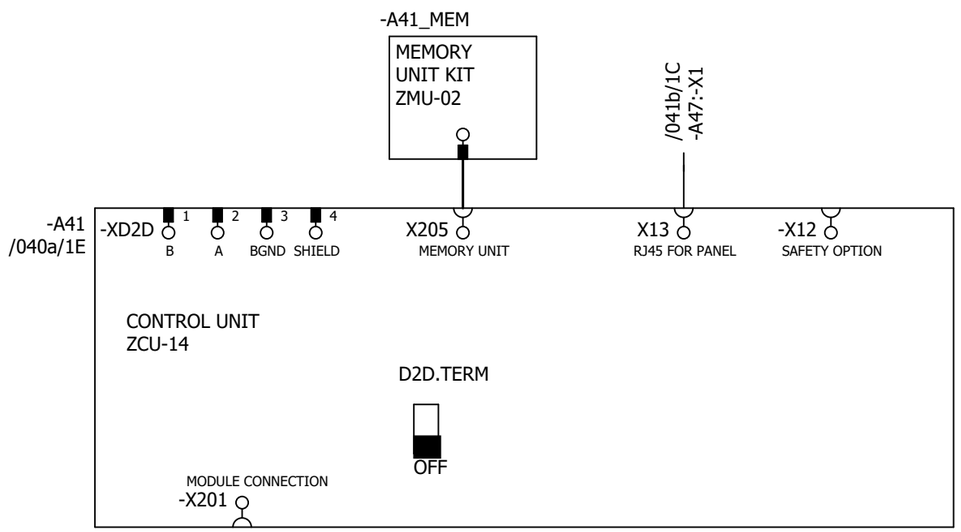

P345812 / 29711

Cust. Doc. No.	Prep. Sky-Xin Zhang 02.08.2023	Title CONTROL BOARD INV2.04 ACS880-107-0078A-3 400V	Circuit diagram EFS2
Cust. Ref. No.	App.		SAP Doc. No.
Customer WMMP	Project Zhaka Jack-up Lift System Zhaka Jack-up Lift System-1		EPLAN Doc. No. 3ABDC230674 - 2.04
			ABB Ref. No.
			Resp. Dept.

Item Des.	= 2.04 + 2.01.1
Rev. .1	Sheet 040d
Cont.	041a

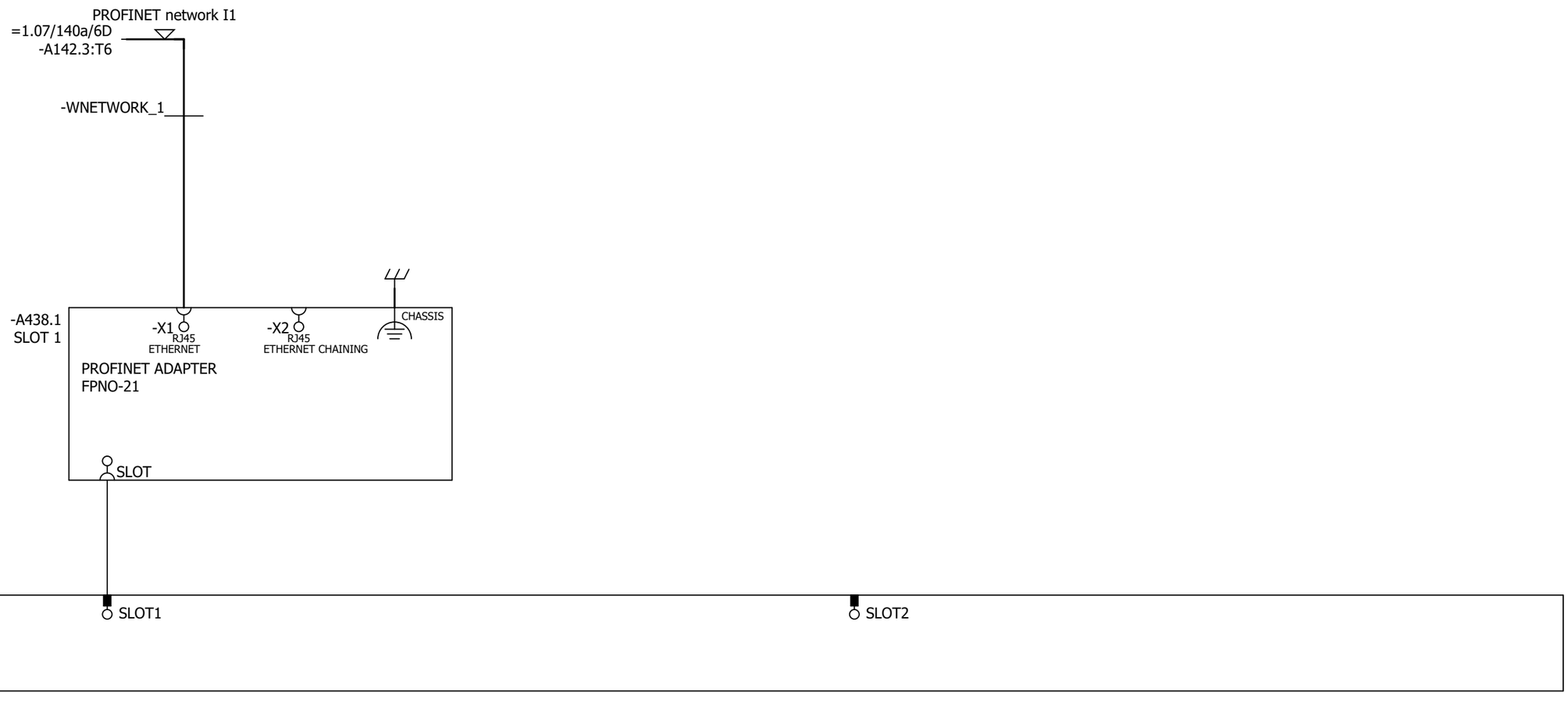

P345812 / 29711

Cust. Doc. No.	Prep. Sky-Xin Zhang 02.08.2023	Title OPTION CARDS INV2.04 ACS880-107-0078A-3 400V	Circuit diagram EFS2
Cust. Ref. No.	App.		SAP Doc. No.
Customer WMMP	Project Zhaka Jack-up Lift System Zhaka Jack-up Lift System-1		EPLAN Doc. No. 3ABDC230674 - 2.04
			ABB Ref. No.
			Resp. Dept.

Item Des.
= 2.04
+ 2.01.1

Rev. .1 Sheet 041a
Cont. 041b

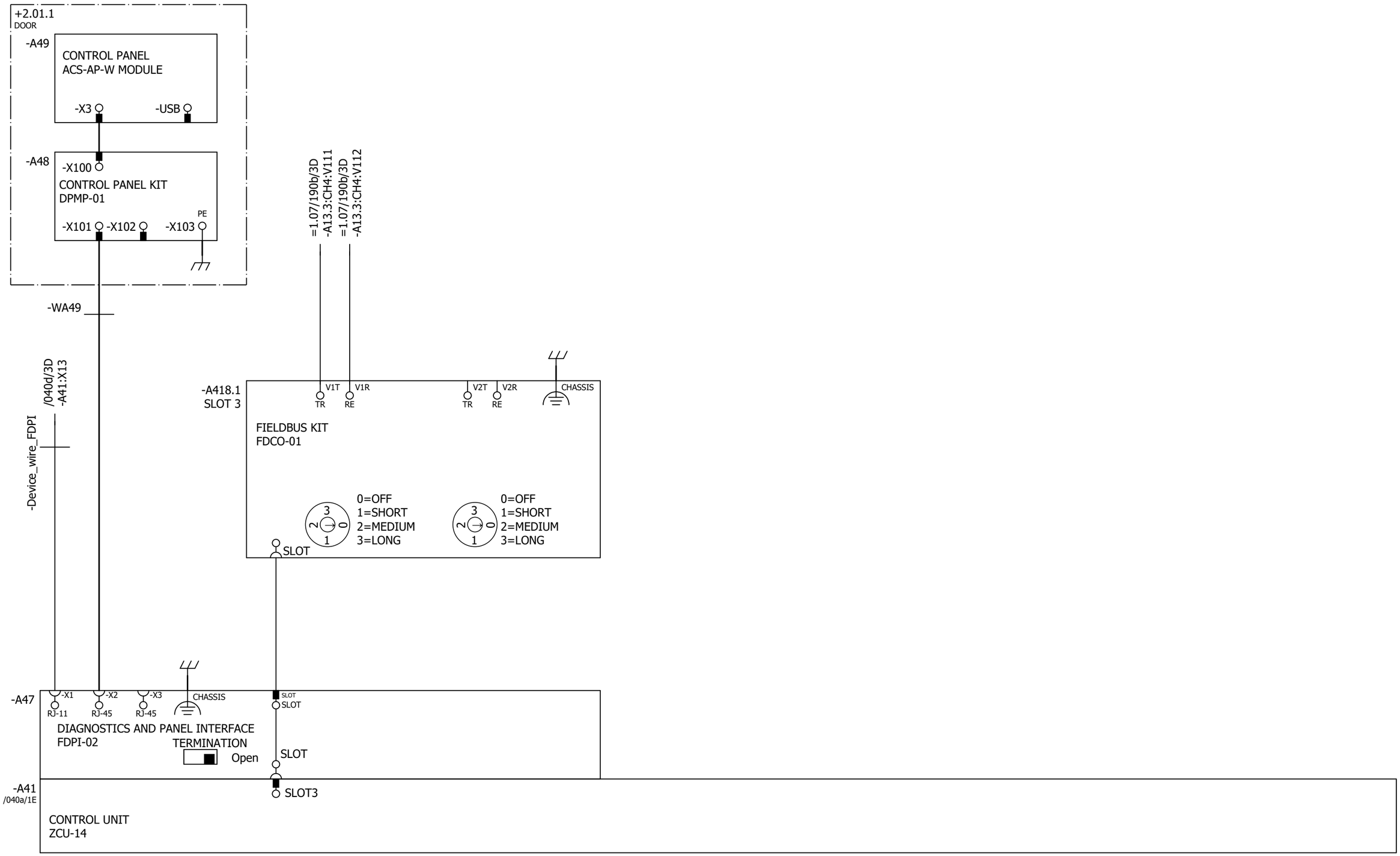

Cust. Doc. No.	Prep. Sky-Xin Zhang 02.08.2023	Title OPTION CARDS	Circuit diagram EFS2	Item Des.
Cust. Ref. No.	App.	INV2.04	SAP Doc. No.	= 2.04
Customer WMMP	Project Zhaka Jack-up Lift System	ACS880-107-0078A-3	EPLAN Doc. No. 3ABDC230674 - 2.04	+ 2.01.1
	Zhaka Jack-up Lift System-1	400V	ABB Ref. No.	Rev. .1 Sheet 041b
			Resp. Dept.	Cont. 061a

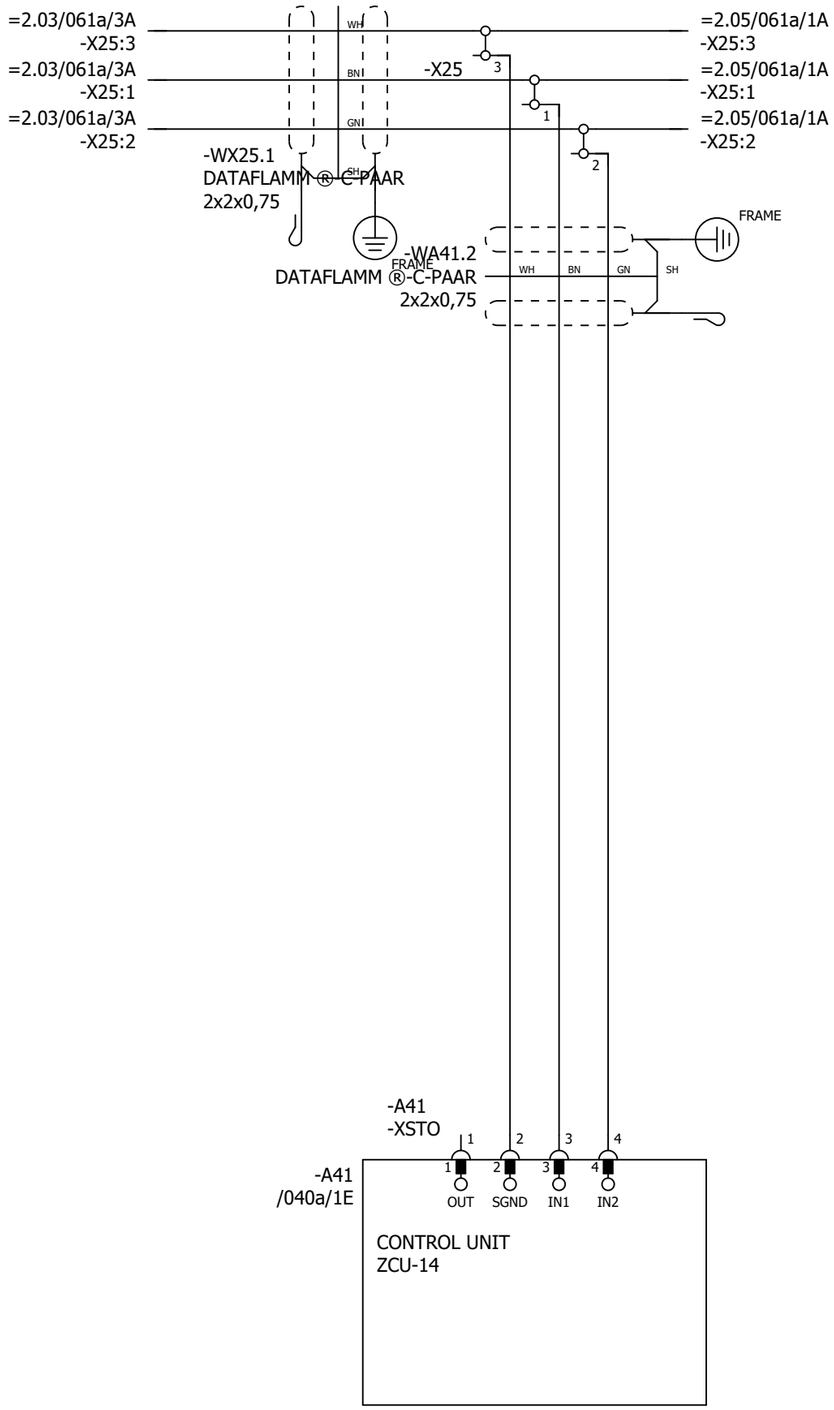

P345812 / 29711

SAFETY CIRCUIT
MACRO REVISION 6
RULES CONVERTED 19.7.2023

Cust. Doc. No.	Prep. Sky-Xin Zhang 02.08.2023	Title SAFETY CIRCUIT	Circuit diagram EFS2	Item Des.
Cust. Ref. No.	App.	INV2.04	SAP Doc. No.	= 2.04
Customer WMMP	Project Zhaka Jack-up Lift System	ACS880-107-0078A-3	EPLAN Doc. No. 3ABDC230674 - 2.04	+ 2.01.1
	Zhaka Jack-up Lift System-1	400V	ABB Ref. No.	Rev. .1 Sheet 061a
			Resp. Dept.	Cont. &MPC/Part list_1

Part list: 3ABDC230674DU02016

Item	Sort String	Qty.Str	Unit	Component Number	Description and text	Technical data
0010		1.000	ST		ACS880-107-0078A-3+A012+B053+C121+C132+	
0020		1.000	ST		_C206+E210+F272+F287+F288+G300+G307+G315	
0030		1.000	ST		_+G320+G330+G344+H352+H367+J400+K492+L50	
0040		1.000	ST		_3+P913+Q964	
0050		1.000	ST		=2.04	
0060		1.000	ST		+2.01.1,INU3	
0070		1.000	ST		Powerconversionequipment	
0080	-A41_MEM	1.000	PC	3AXD50000006010	MEMORY UNIT KIT ZMU-02	
0090	-T11	1.000	PC	3AUA0000120009-M	ACS880-104-0078A-3+P922	+P922
0100	SCREW	1.000	PC	3AFE68681481	SCREW K30X10 TORX	PT WN1452 ZN
0110	SOFTWARE	1.000	PC	3AUA0000153462	SOFTWARE PRIMARY CONTROL PROGRA	AINF6 FOR ZCU-12/14
0120		1.000	ST		R4imoduleDCfuse	
0130	-F11.1-2	2.000	PC	3AXD50000000219	FUSE FR27UQ69V160T/160A	6.921 CP URQ 27X60MM FERRULE;AR
0140		1.000	ST		R3i-R4imoduleDCfusebase	
0150	(-F11.1-2)	2.000	PC	3AUA0000089227	FUSE HOLDER FUSE BASE US271MI 150A	FUSE BASE US271MI 150A 800V
0160		1.000	ST		24VDCsupplyZCU	
0170	-WA41_1	1.000	PC	3AXD50000005218	WIRE HARNESS 24VDC SUPPLY X51 ZCU V	HALOGEN FREE;X51_A51
0180		1.000	ST		Rooffancontrol	
0190	-WA41_3	1.000	PC	3AXD50000002688	WIRE HARNESS FAN CONTROL MAIN WIRE	HALOGEN FREE;X208_X26.3
0200		1.000	ST		Bottomrowmodulewireharness	
0210	-WT11	1.000	PC	3AXD50000002418	WIRE HARNESS R4I FUSE_MODULE BR V2	HALOGEN FREE;MAIN CIRCUIT WIRE SET
0220		1.000	ST		Optionmodule	
0230	-A418.1	1.000	PC	3AUA0000107392	COMMUNIC. ADAPTER FDCO-01	
0240		1.000	ST		Controlpanel	
0250	-A47	1.000	PC	3AUA0000108650	FIELDBUS KIT FDPI-02	PANEL BUS ADAPTER
0260	-A48	1.000	PC	3AUA0000108878	CONTROL PANEL KIT DPMP-01	DPMP-01
0270	-A49	1.000	PC	3AXD50000025964	CONTROL PANEL ACS-AP-W MODULE	ASSISTANT PANEL WIRELESS CPU1
0280		1.000	ST		DCfusesupervision	
0290	-K11.1-2	2.000	PC	3AXD50000021313	RELAY DEK_REL_G24/21	250 V;6 A;COIL 24VDC
0300		1.000	ST		FieldBus	
0310	-A438.1	1.000	PC	3AXD50000192779	OPTION MODULE FPNO-21	PROFINET IO
0320		1.000	ST		Supplementtorelay	
0330	(-K11.1)	1.000	PC	3AXD50000021312	TERMINAL BLOCK ST EB2_DIK_RD 2716693	2POLE, 6,15 MM PITCH;FOR DEK RELAYS

P345812 / 29711

Cust. Doc. No.	Prep.	Title PART LIST INV2.04 ACS880-107-0078A-3 400V	Item Des. = 2.04 +
Cust. Ref. No.	App.		SAP Doc. No.
Customer WMMP	Project Zhaka Jack-up Lift System Zhaka Jack-up Lift System-1		EPLAN Doc. No. 3ABDC230674 - 2.04
			ABB Ref. No. / Rev. / Sheet Part list_1
			Resp. Dept. / Cont. &EMA/1

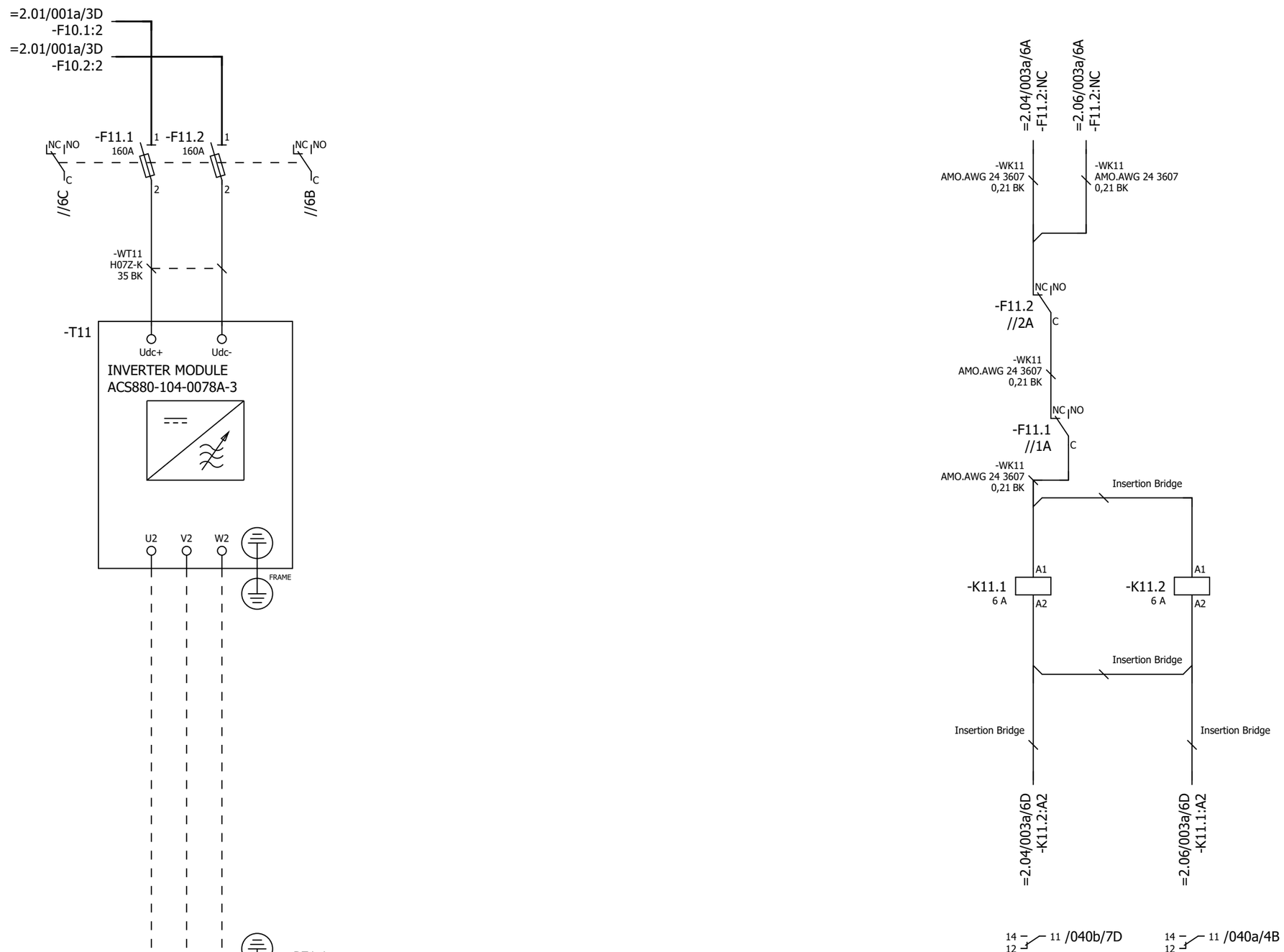

P345812 / 29711

Cust. Doc. No.	Prep. Sky-Xin Zhang 02.08.2023	Title MAIN CIRCUIT	Circuit diagram EFS2
Cust. Ref. No.	App.	INV2.05	SAP Doc. No.
Customer WMMP	Project Zhaka Jack-up Lift System	ACS880-107-0078A-3	EPLAN Doc. No. 3ABDC230674 - 2.05
	Zhaka Jack-up Lift System-1	400V	ABB Ref. No.
			Resp. Dept.

Item Des.
= 2.05
+ 2.01.1

Rev. .1 Sheet 003a
Cont. 040a

Control and status signals	Terminal	Pin
E-STOP FEEDBACK 1 - ESTOP ACTIVE	-XRO1	12
RUNNING 1 - RUNNING	-XRO2	22
FAULT (-1) 1 - NO FAULT	-XRO3	32

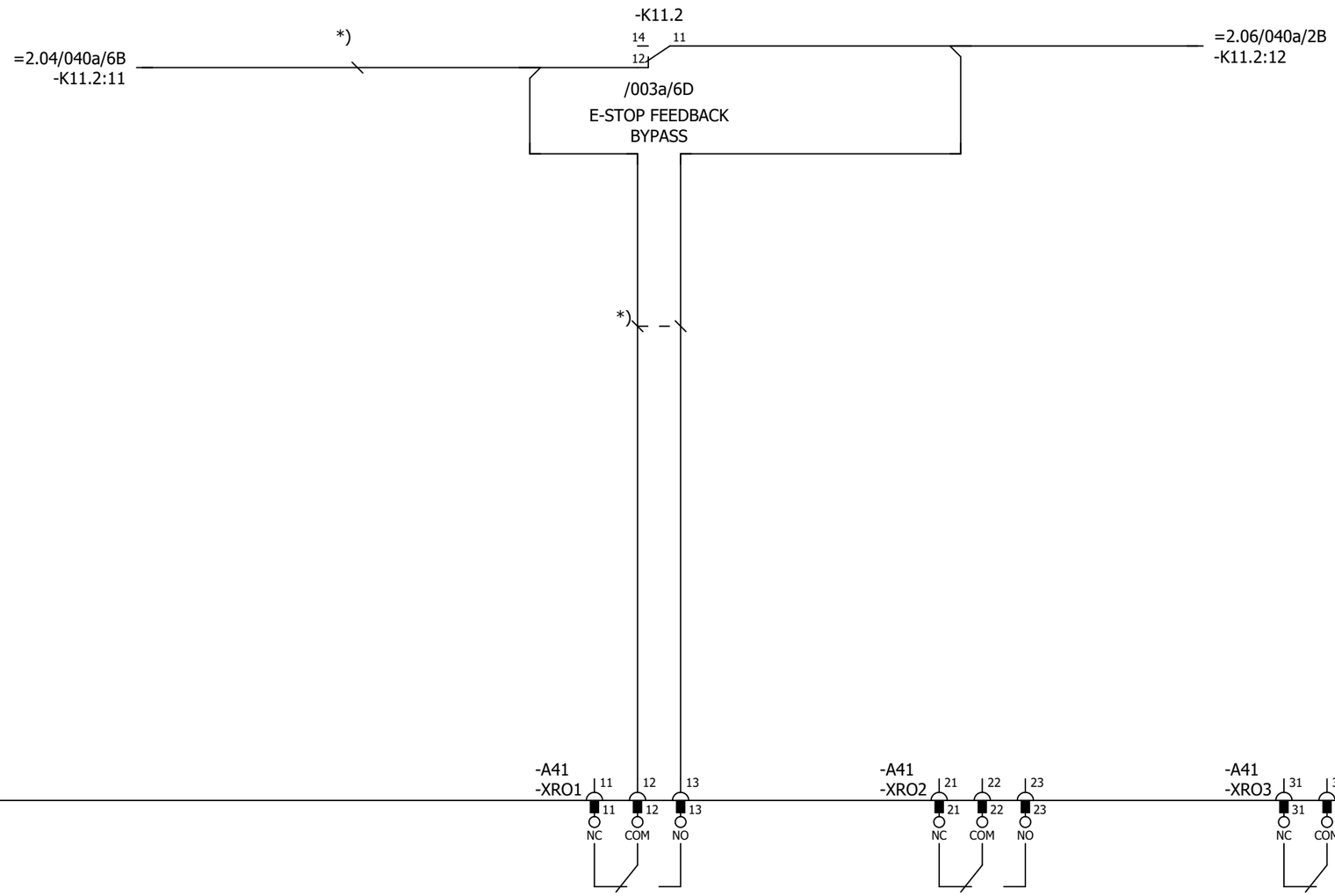

P345812 / 29711

Cust. Doc. No.	Prep. Sky-Xin Zhang 02.08.2023	Title CONTROL BOARD INV2.05 ACS880-107-0078A-3 400V	Circuit diagram EFS2
Cust. Ref. No.	App.		SAP Doc. No.
Customer WMMP	Project Zhaka Jack-up Lift System Zhaka Jack-up Lift System-1		EPLAN Doc. No. 3ABDC230674 - 2.05
			ABB Ref. No.
			Resp. Dept.

Item Des.
= 2.05
+ 2.01.1

Rev. .1 Sheet 040a
Cont. 040b

Control and status signals	Terminal	Pin
DIGITAL INTERLOCK	-XD24	1
START/STOP 1 - START	-XDI	1
FORWARD/REVERSE 1 - REVERSE	-XDI	2
RESET	-XDI	3
EMERGENCY STOP 0 - ACTIVE	-XDI	4
NOT SPECIFIED	-XDI	5
DI6 NOT IN USE	-XDI	6
OUTPUT: READY	-XDIO	1
OUTPUT: RUNNING	-XDIO	2

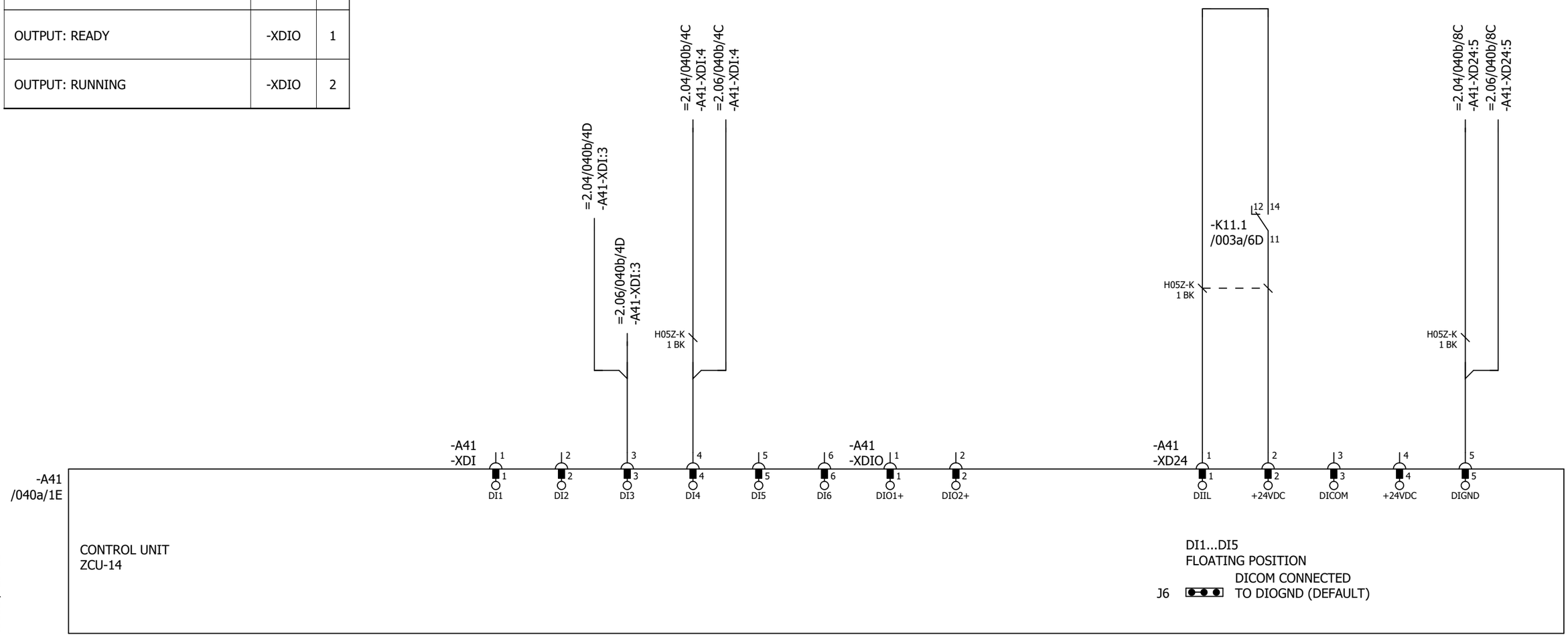

P345812 / 29711

Cust. Doc. No.	Prep. Sky-Xin Zhang 02.08.2023	Title CONTROL BOARD INV2.05 ACS880-107-0078A-3 400V	Circuit diagram EFS2
Cust. Ref. No.	App.		SAP Doc. No.
Customer WMMP	Project Zhaka Jack-up Lift System Zhaka Jack-up Lift System-1		EPLAN Doc. No. 3ABDC230674 - 2.05
			ABB Ref. No.
			Resp. Dept.

Item Des.
= 2.05
+ 2.01.1

Rev. .1 Sheet 040b
Cont. 040c

Control and status signals	Terminal	Pin
MOTOR TEMP. MONITORING 0(2)…10V	-XAI	4
AI2 NOT SPECIFIED BY DEFAULT NOT IN USE 0(4)…20mA	-XAI	6
CURR SOU MOT TEMP MONIT 0(4)...20mA	-XAO	1
CURRENT 0(4)…20mA ↔ 0(4)…MOTOR CURRENT	-XAO	3

P345812 / 29711

Cust. Doc. No.	Prep. Sky-Xin Zhang 02.08.2023	Title CONTROL BOARD INV2.05 ACS880-107-0078A-3 400V	Circuit diagram EFS2
Cust. Ref. No.	App.		SAP Doc. No.
Customer WMMP	Project Zhaka Jack-up Lift System Zhaka Jack-up Lift System-1		EPLAN Doc. No. 3ABDC230674 - 2.05
			ABB Ref. No.
			Resp. Dept.

Item Des.
= 2.05
+ 2.01.1

Rev. .1 Sheet 040c
Cont. 040d

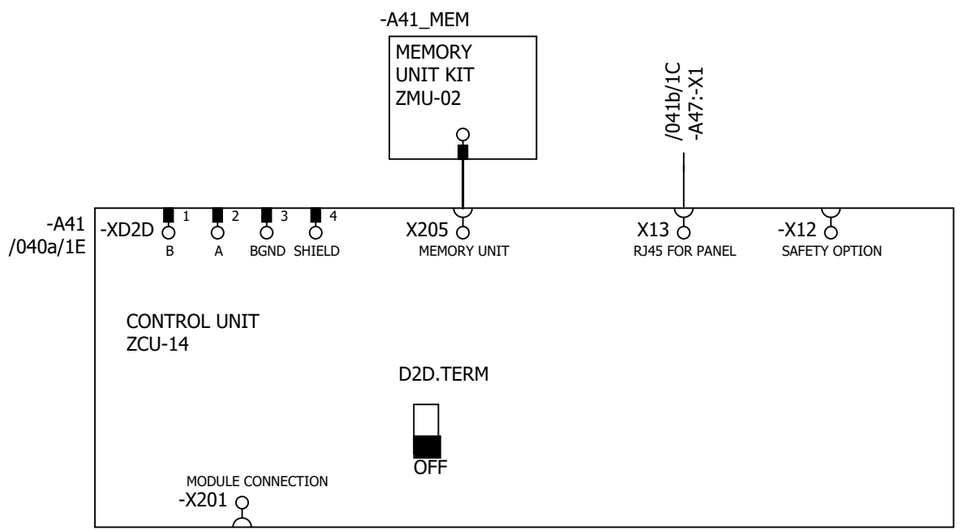

P345812 / 29711

Cust. Doc. No.	Prep. Sky-Xin Zhang 02.08.2023	Title CONTROL BOARD INV2.05 ACS880-107-0078A-3 400V	Circuit diagram EFS2
Cust. Ref. No.	App.		SAP Doc. No.
Customer WMMP	Project Zhaka Jack-up Lift System Zhaka Jack-up Lift System-1		EPLAN Doc. No. 3ABDC230674 - 2.05
			ABB Ref. No.
			Resp. Dept.

Item Des.	= 2.05 + 2.01.1
Rev. .1	Sheet 040d
Cont.	041a

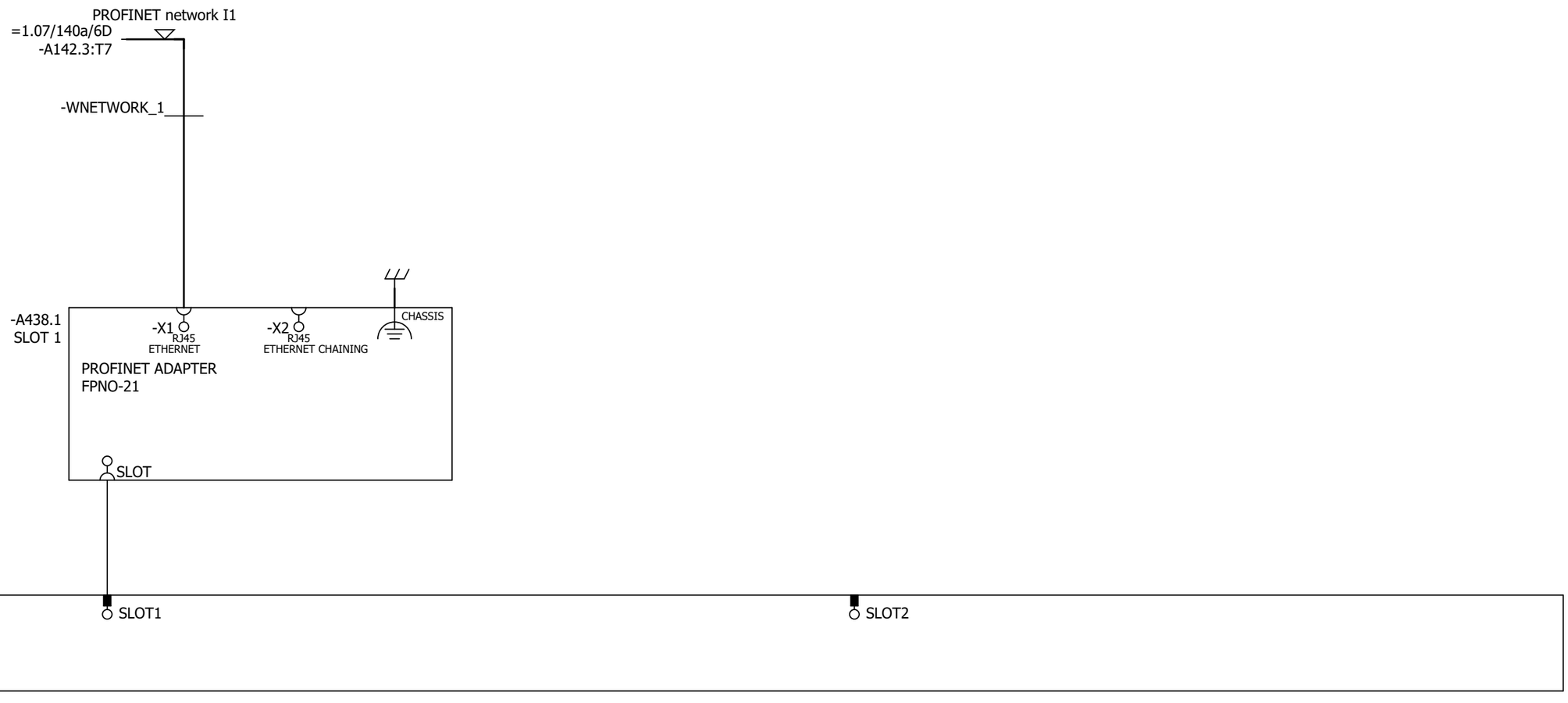

Cust. Doc. No.	Prep. Sky-Xin Zhang 02.08.2023	Title OPTION CARDS	Circuit diagram EFS2	Item Des.	
Cust. Ref. No.	App.	INV2.05	SAP Doc. No.	= 2.05	
Customer WMMP	Project Zhaka Jack-up Lift System	ACS880-107-0078A-3	EPLAN Doc. No. 3ABDC230674 - 2.05	+ 2.01.1	
	Zhaka Jack-up Lift System-1	400V	ABB Ref. No.	Rev. .1	Sheet 041a
			Resp. Dept.	Cont.	041b

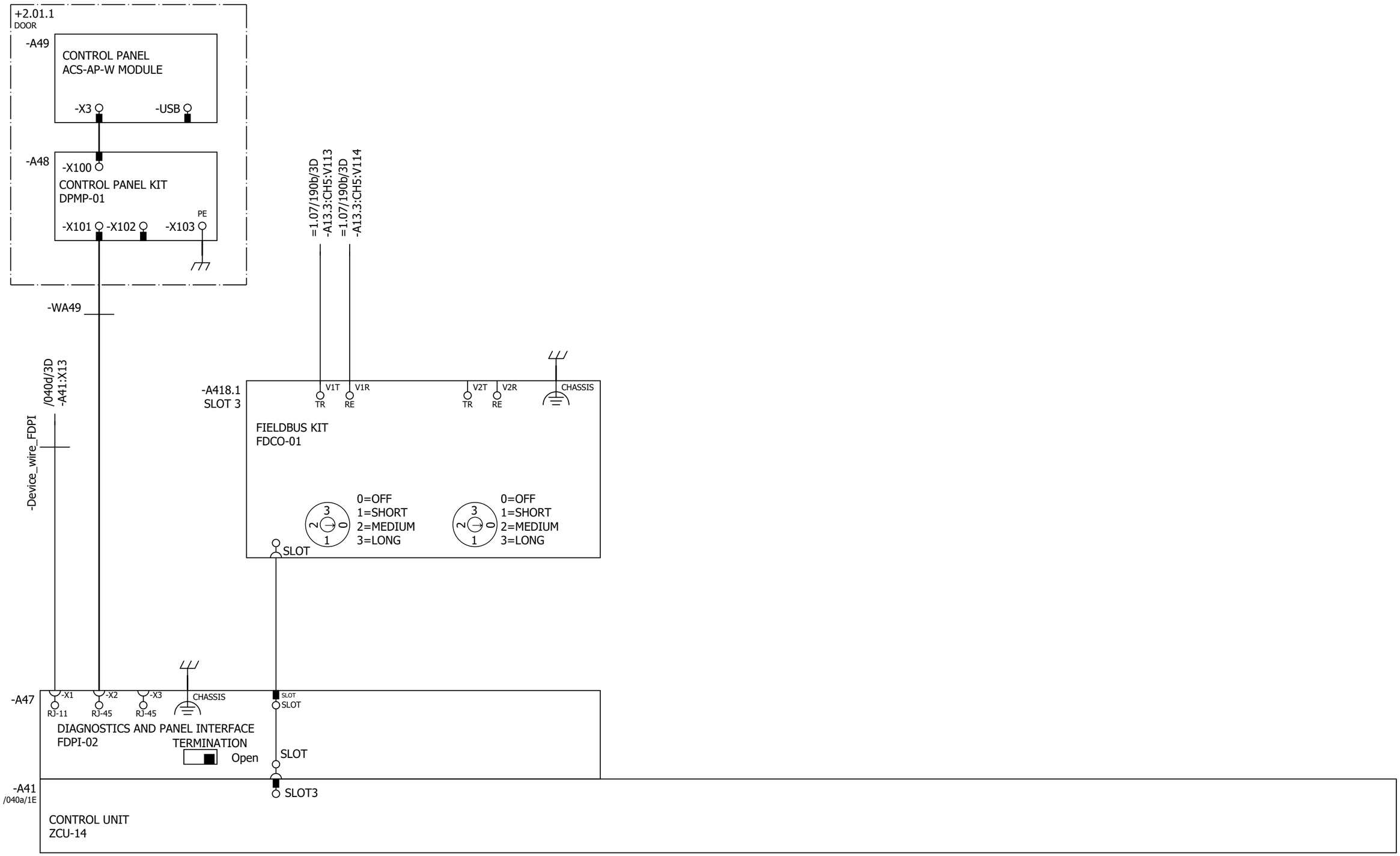

Cust. Doc. No.	Prep. Sky-Xin Zhang 02.08.2023	Title OPTION CARDS INV2.05 ACS880-107-0078A-3 400V	Circuit diagram EFS2
Cust. Ref. No.	App.		SAP Doc. No.
Customer WMMP	Project Zhaka Jack-up Lift System Zhaka Jack-up Lift System-1		EPLAN Doc. No. 3ABDC230674 - 2.05
			ABB Ref. No.
			Resp. Dept.

Item Des.
= 2.05
+ 2.01.1

Rev. .1 Sheet 041b
Cont. 061a

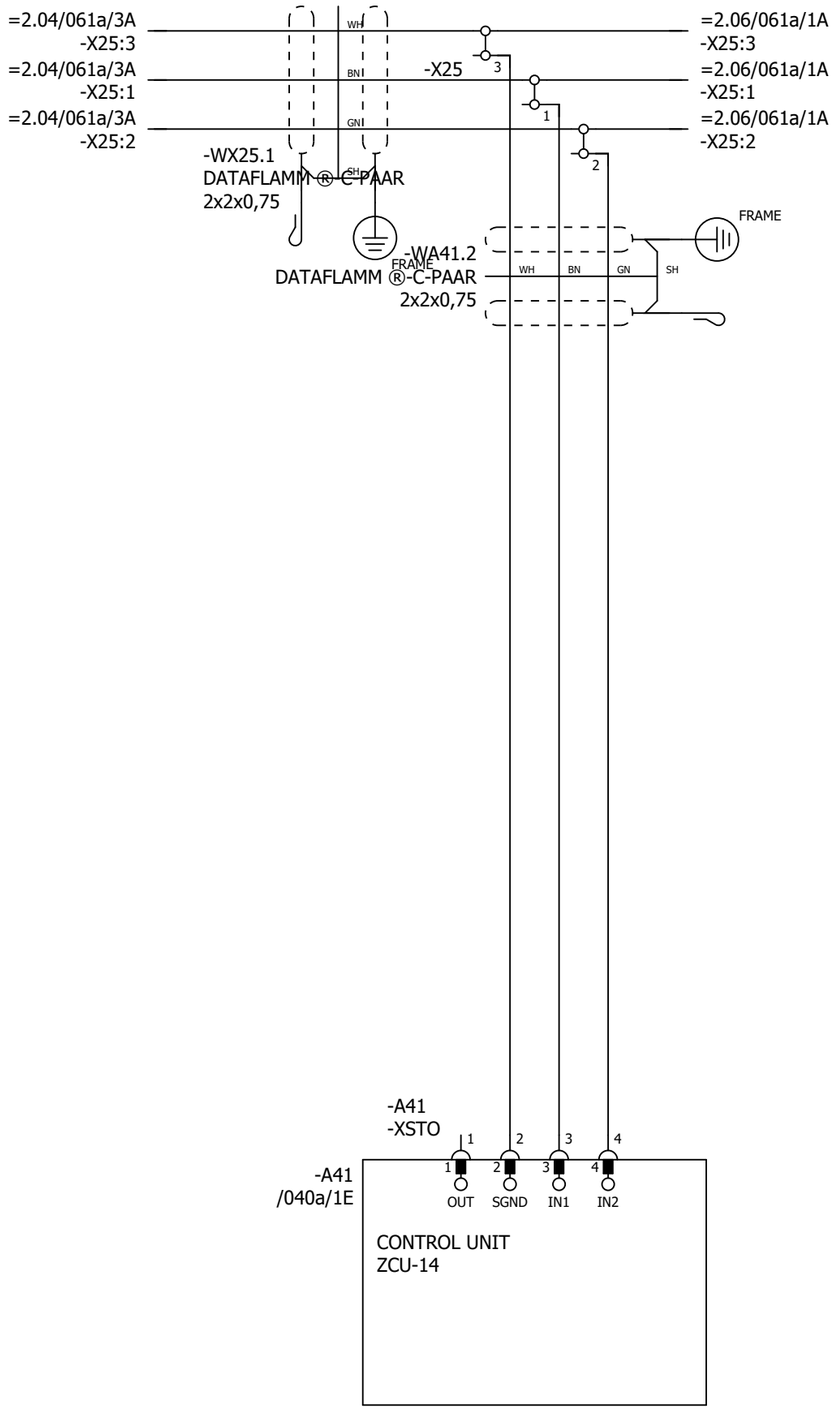

P345812 / 29711

SAFETY CIRCUIT
MACRO REVISION 6
RULES CONVERTED 19.7.2023

Cust. Doc. No.	Prep. Sky-Xin Zhang 02.08.2023	Title SAFETY CIRCUIT	Circuit diagram EFS2	Item Des.	
Cust. Ref. No.	App.	INV2.05	SAP Doc. No.	= 2.05	
Customer WMMP	Project Zhaka Jack-up Lift System	ACS880-107-0078A-3	EPLAN Doc. No. 3ABDC230674 - 2.05	+ 2.01.1	
	Zhaka Jack-up Lift System-1	400V	ABB Ref. No.	Rev. .1	Sheet 061a
			Resp. Dept.	Cont.	&MPC/Part list_1

Part list: 3ABDC230674DU02017

Item	Sort String	Qty.Str	Unit	Component Number	Description and text	Technical data
0010		1.000	ST		ACS880-107-0078A-3+A012+B053+C121+C132+	
0020		1.000	ST		_C206+E210+F272+F287+F288+G300+G307+G315	
0030		1.000	ST		_+G320+G330+G344+H352+H367+K450+K492+L50	
0040		1.000	ST		_3+P913+Q964	
0050		1.000	ST		=2.05	
0060		1.000	ST		+2.01.1,INU3	
0070		1.000	ST		Powerconversionequipment	
0080	-A41_MEM	1.000	PC	3AXD50000006010	MEMORY UNIT KIT ZMU-02	
0090	-T11	1.000	PC	3AUA0000120009-M	ACS880-104-0078A-3+P922	+P922
0100	SCREW	1.000	PC	3AFE68681481	SCREW K30X10 TORX	PT WN1452 ZN
0110	SOFTWARE	1.000	PC	3AUA0000153462	SOFTWARE PRIMARY CONTROL PROGRA	AINF6 FOR ZCU-12/14
0120		1.000	ST		R4imoduleDCfuse	
0130	-F11.1-2	2.000	PC	3AXD50000000219	FUSE FR27UQ69V160T/160A	6.921 CP URQ 27X60MM FERRULE;AR
0140		1.000	ST		R3i-R4imoduleDCfusebase	
0150	(-F11.1-2)	2.000	PC	3AUA0000089227	FUSE HOLDER FUSE BASE US271MI 150A	FUSE BASE US271MI 150A 800V
0160		1.000	ST		24VDCsupplyZCU	
0170	-WA41_1	1.000	PC	3AXD50000005218	WIRE HARNESS 24VDC SUPPLY X51 ZCU V	HALOGEN FREE;X51_A51
0180		1.000	ST		Rooffancontrol	
0190	-WA41_3	1.000	PC	3AXD50000002688	WIRE HARNESS FAN CONTROL MAIN WIRE	HALOGEN FREE;X208_X26.3
0200		1.000	ST		Bottomrowmodulewireharness	
0210	-WT11	1.000	PC	3AXD50000002418	WIRE HARNESS R4I FUSE_MODULE BR V2	HALOGEN FREE;MAIN CIRCUIT WIRE SET
0220		1.000	ST		Optionmodule	
0230	-A418.1	1.000	PC	3AUA0000107392	COMMUNIC. ADAPTER FDCO-01	
0240		1.000	ST		Controlpanel	
0250	-A47	1.000	PC	3AUA0000108650	FIELDBUS KIT FDPI-02	PANEL BUS ADAPTER
0260		1.000	ST		DCfusesupervision	
0270	-K11.1-2	2.000	PC	3AXD50000021313	RELAY DEK_REL_G24/21	250 V;6 A;COIL 24VDC
0280		1.000	ST		FieldBus	
0290	-A438.1	1.000	PC	3AXD50000192779	OPTION MODULE FPNO-21	PROFINET IO
0300		1.000	ST		Supplementtorelay	
0310	(-K11.1)	1.000	PC	3AXD50000021312	TERMINAL BLOCK ST EB2_DIK_RD 2716693	2POLE, 6,15 MM PITCH;FOR DEK RELAYS

P345812 / 29711

Cust. Doc. No.	Prep.	Title PART LIST INV2.05 ACS880-107-0078A-3 400V	Item Des. = 2.05 +
Cust. Ref. No.	App.	SAP Doc. No.	
Customer WMMP	Project Zhaka Jack-up Lift System Zhaka Jack-up Lift System-1	EPLAN Doc. No. 3ABDC230674 - 2.05	
		ABB Ref. No.	Rev. / Sheet Part list_1
		Resp. Dept.	Cont. &EMA/1

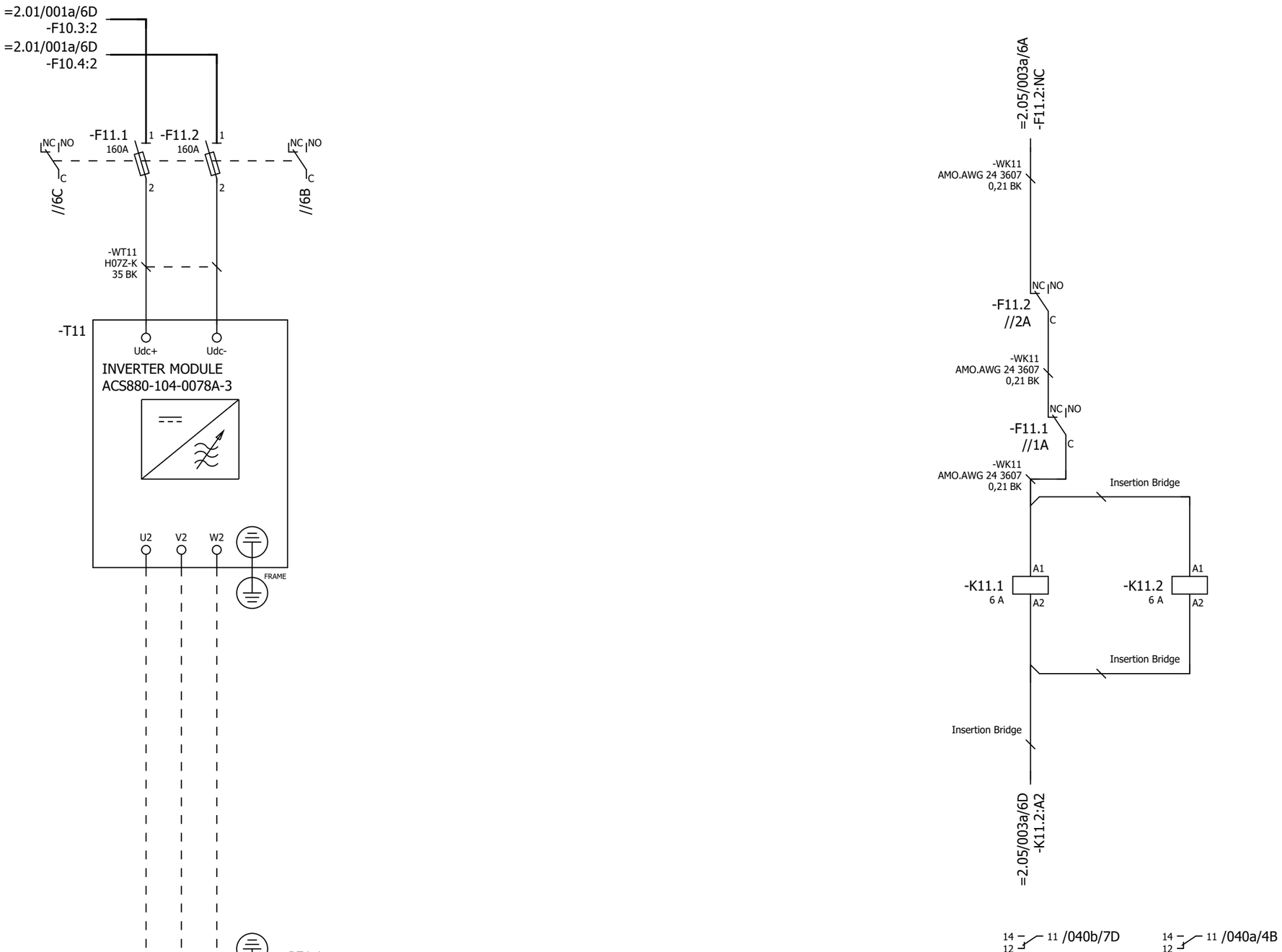

P345812 / 29711

Cust. Doc. No.	Prep. Sky-Xin Zhang 02.08.2023	Title MAIN CIRCUIT	Circuit diagram EFS2
Cust. Ref. No.	App.	INV2.06	SAP Doc. No.
Customer WMMP	Project Zhaka Jack-up Lift System	ACS880-107-0078A-3	EPLAN Doc. No. 3ABDC230674 - 2.06
	Zhaka Jack-up Lift System-1	400V	ABB Ref. No.
			Resp. Dept.

Item Des.
= 2.06
+ 2.01.1

Rev. .1 Sheet 003a
Cont. 040a

Control and status signals	Terminal	Pin
E-STOP FEEDBACK 1 - ESTOP ACTIVE	-XRO1	12
RUNNING 1 - RUNNING	-XRO2	22
FAULT (-1) 1 - NO FAULT	-XRO3	32

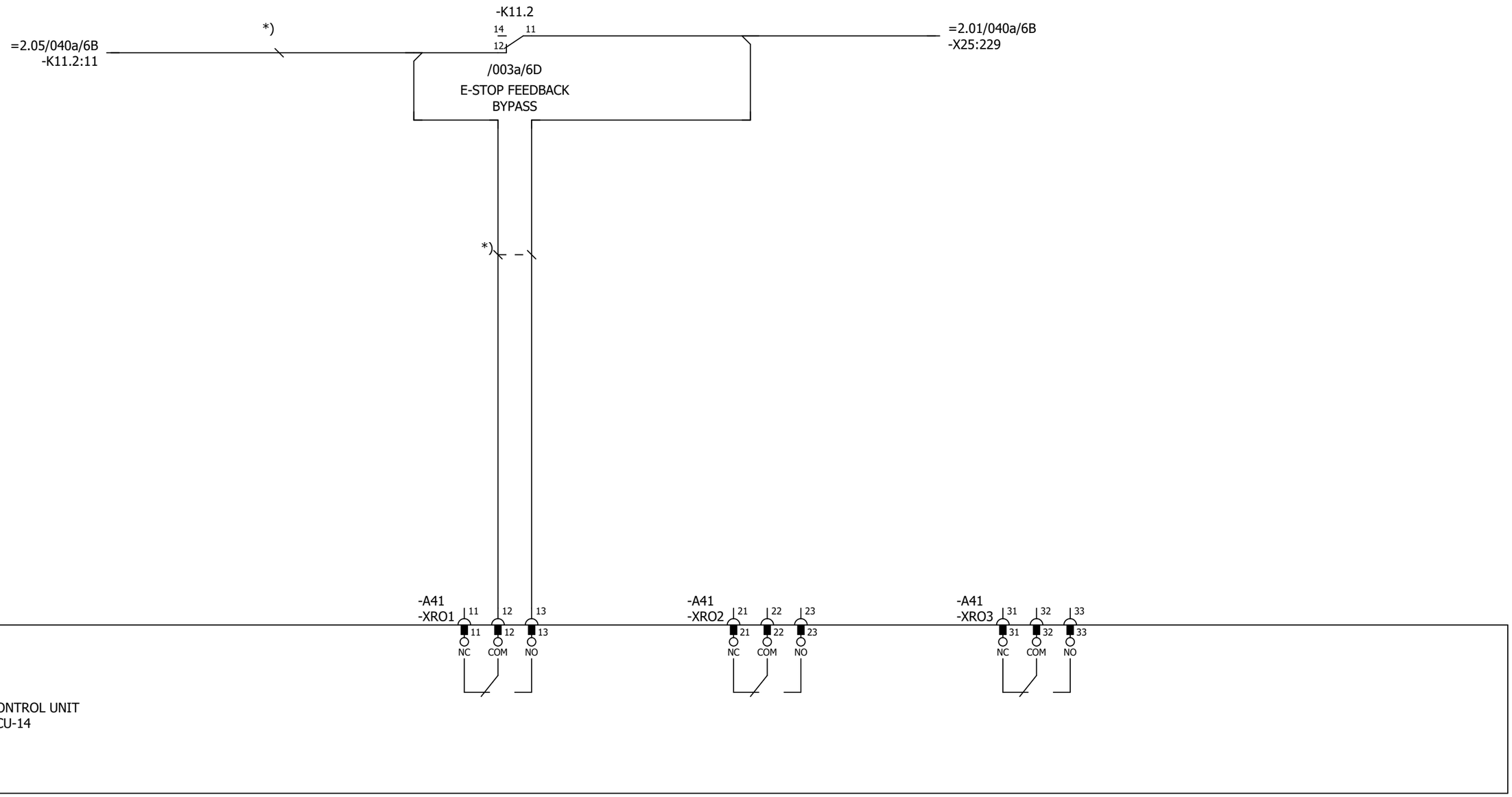

Cust. Doc. No.	Prep. Sky-Xin Zhang 02.08.2023	Title CONTROL BOARD INV2.06 ACS880-107-0078A-3 400V	Circuit diagram EFS2	Item Des.	
Cust. Ref. No.	App.		SAP Doc. No.	= 2.06 + 2.01.1	
Customer WMMP	Project Zhaka Jack-up Lift System Zhaka Jack-up Lift System-1	ABB	EPLAN Doc. No. 3ABDC230674 - 2.06		
			ABB Ref. No.	Rev. .1	Sheet 040a
			Resp. Dept.	Cont.	040b

Control and status signals	Terminal	Pin
DIGITAL INTERLOCK	-XD24	1
START/STOP 1 - START	-XDI	1
FORWARD/REVERSE 1 - REVERSE	-XDI	2
RESET	-XDI	3
EMERGENCY STOP 0 - ACTIVE	-XDI	4
NOT SPECIFIED	-XDI	5
DI6 NOT IN USE	-XDI	6
OUTPUT: READY	-XDIO	1
OUTPUT: RUNNING	-XDIO	2

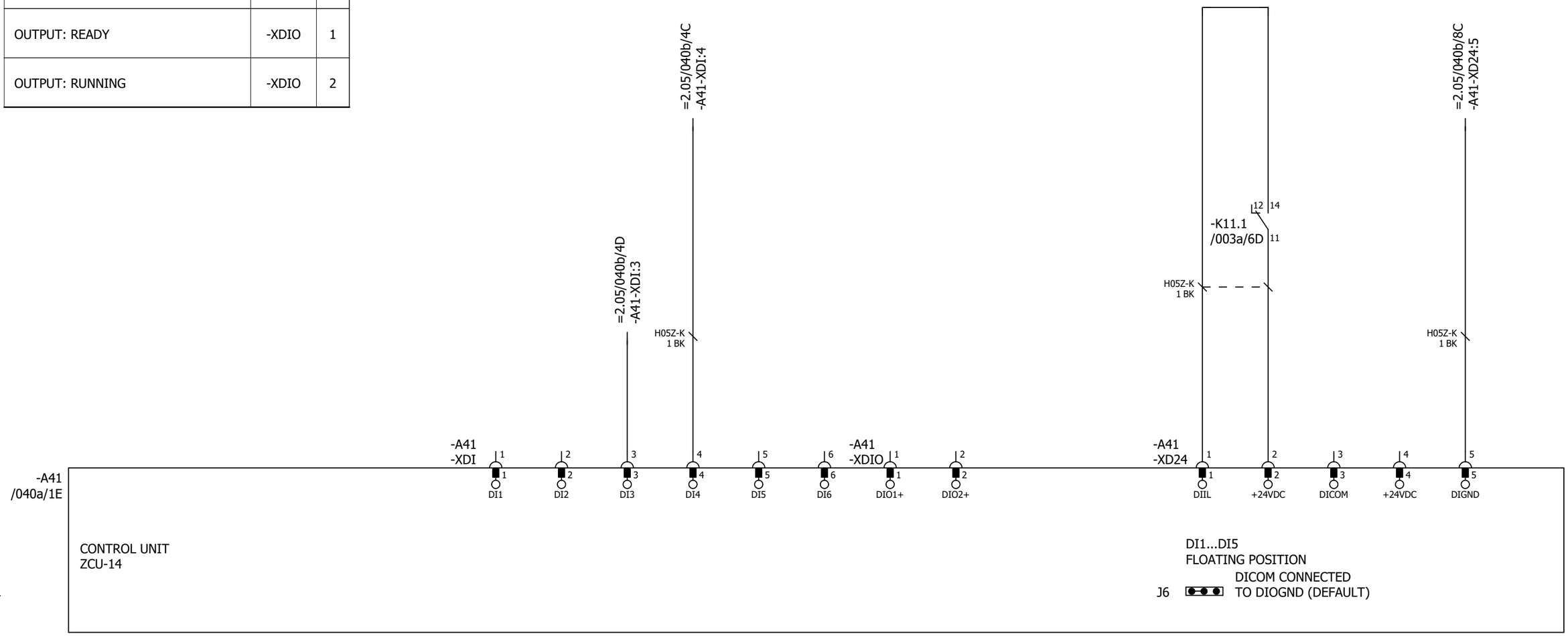

P345812 / 29711

Cust. Doc. No.	Prep. Sky-Xin Zhang 02.08.2023	Title CONTROL BOARD INV2.06 ACS880-107-0078A-3 400V	Circuit diagram EFS2
Cust. Ref. No.	App.		SAP Doc. No.
Customer WMMP	Project Zhaka Jack-up Lift System Zhaka Jack-up Lift System-1		EPLAN Doc. No. 3ABDC230674 - 2.06
			ABB Ref. No.
			Resp. Dept.

Item Des.
= 2.06
+ 2.01.1

Rev. .1 Sheet 040b
Cont. 040c

Control and status signals	Terminal	Pin
MOTOR TEMP. MONITORING 0(2)…10V	-XAI	4
AI2 NOT SPECIFIED BY DEFAULT NOT IN USE 0(4)…20mA	-XAI	6
CURR SOU MOT TEMP MONIT 0(4)...20mA	-XAO	1
CURRENT 0(4)…20mA ↔ 0(4)…MOTOR CURRENT	-XAO	3

P345812 / 29711

Cust. Doc. No.	Prep. Sky-Xin Zhang 02.08.2023	Title CONTROL BOARD INV2.06 ACS880-107-0078A-3 400V	Circuit diagram EFS2
Cust. Ref. No.	App.		SAP Doc. No.
Customer WMMP	Project Zhaka Jack-up Lift System Zhaka Jack-up Lift System-1		EPLAN Doc. No. 3ABDC230674 - 2.06
			ABB Ref. No.
			Resp. Dept.

Item Des.
= 2.06
+ 2.01.1

Rev. .1 Sheet 040c
Cont. 040d

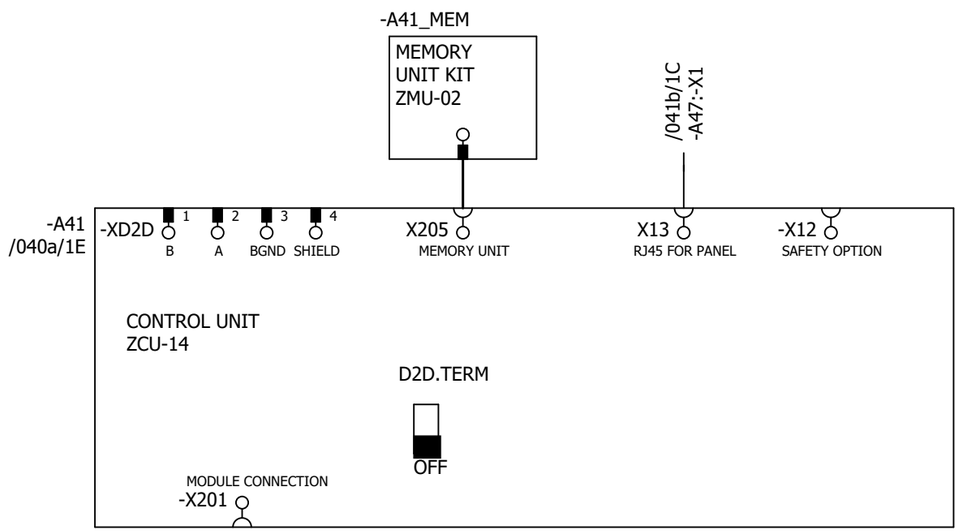

P345812 / 29711

Cust. Doc. No.	Prep. Sky-Xin Zhang 02.08.2023	Title CONTROL BOARD	Circuit diagram EFS2
Cust. Ref. No.	App.	INV2.06	SAP Doc. No.
Customer WMMP	Project Zhaka Jack-up Lift System	ACS880-107-0078A-3	EPLAN Doc. No. 3ABDC230674 - 2.06
	Zhaka Jack-up Lift System-1	400V	ABB Ref. No.
			Resp. Dept.

Item Des. = 2.06 + 2.01.1

Rev. .1 Sheet 040d

Cont. 041a

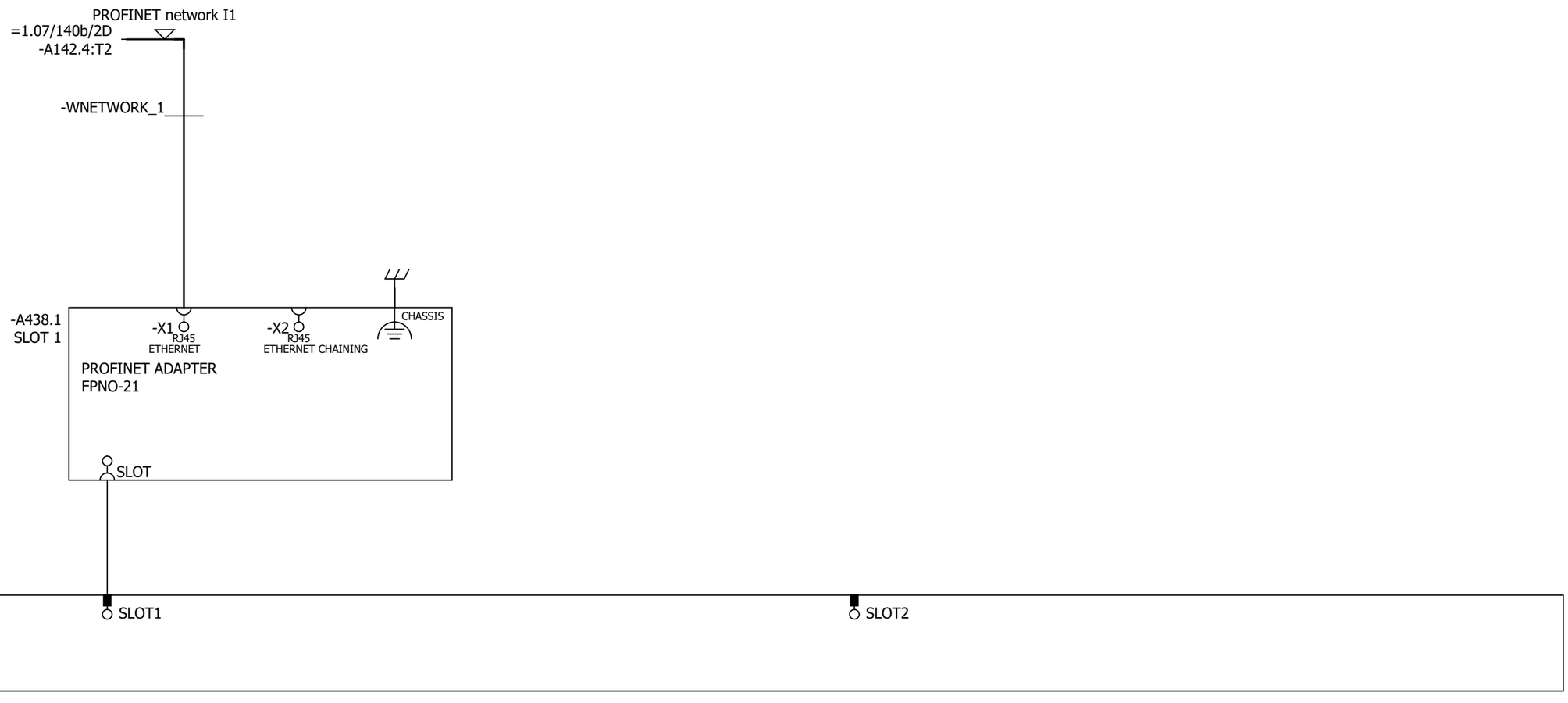

Cust. Doc. No.	Prep. Sky-Xin Zhang 02.08.2023	Title OPTION CARDS INV2.06 ACS880-107-0078A-3 400V	Circuit diagram EFS2
Cust. Ref. No.	App.		SAP Doc. No.
Customer WMMP	Project Zhaka Jack-up Lift System Zhaka Jack-up Lift System-1		EPLAN Doc. No. 3ABDC230674 - 2.06
			ABB Ref. No.
			Resp. Dept.

Item Des.
= 2.06
+ 2.01.1

Rev. .1 Sheet 041a
Cont. 041b

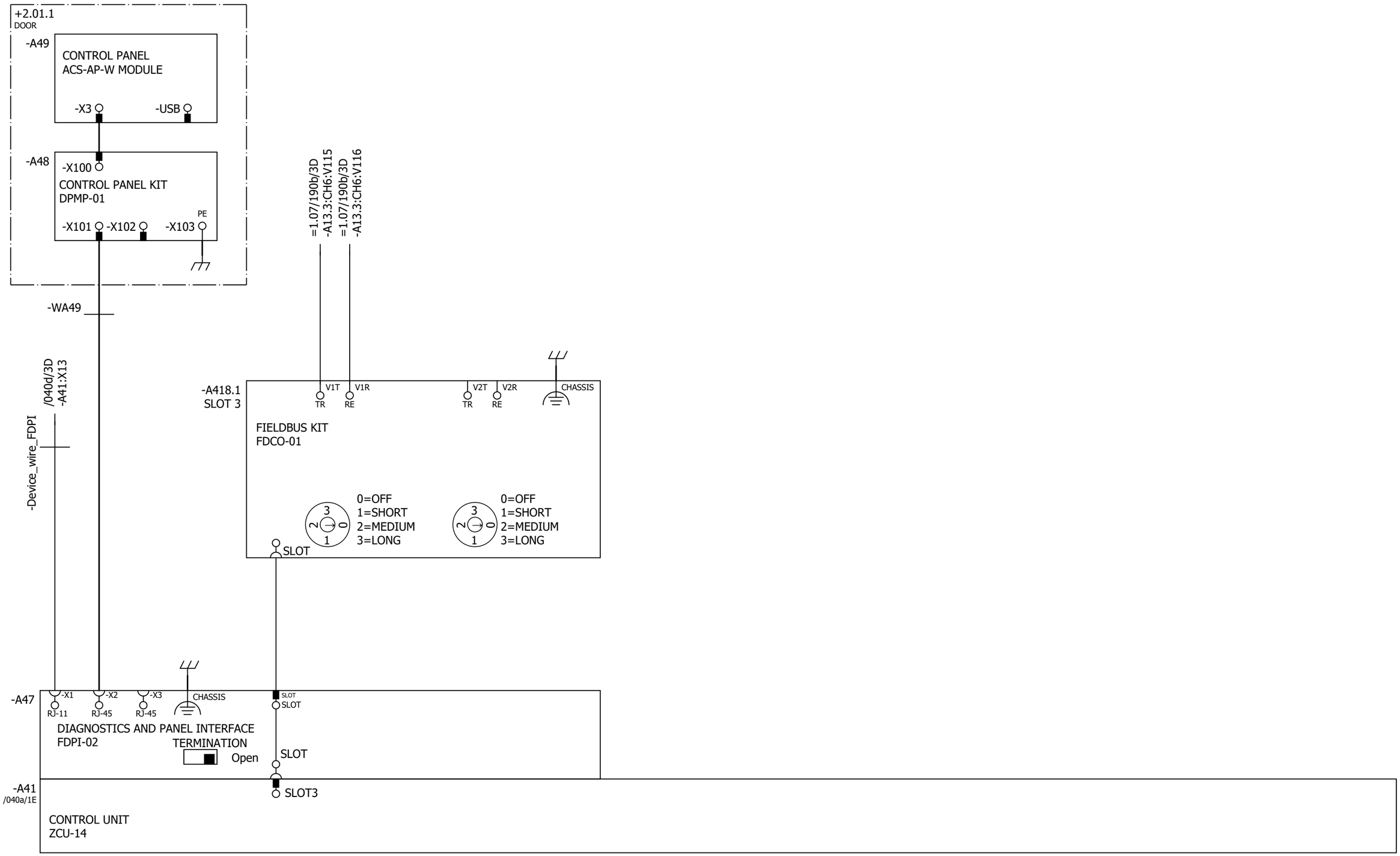

P345812 / 29711

Cust. Doc. No.	Prep. Sky-Xin Zhang 02.08.2023	Title OPTION CARDS INV2.06 ACS880-107-0078A-3 400V	Circuit diagram EFS2
Cust. Ref. No.	App.		SAP Doc. No.
Customer WMMP	Project Zhaka Jack-up Lift System Zhaka Jack-up Lift System-1		EPLAN Doc. No. 3ABDC230674 - 2.06
			ABB Ref. No.
			Resp. Dept.

Item Des.
= 2.06
+ 2.01.1

Rev. .1 Sheet 041b
Cont. 061a

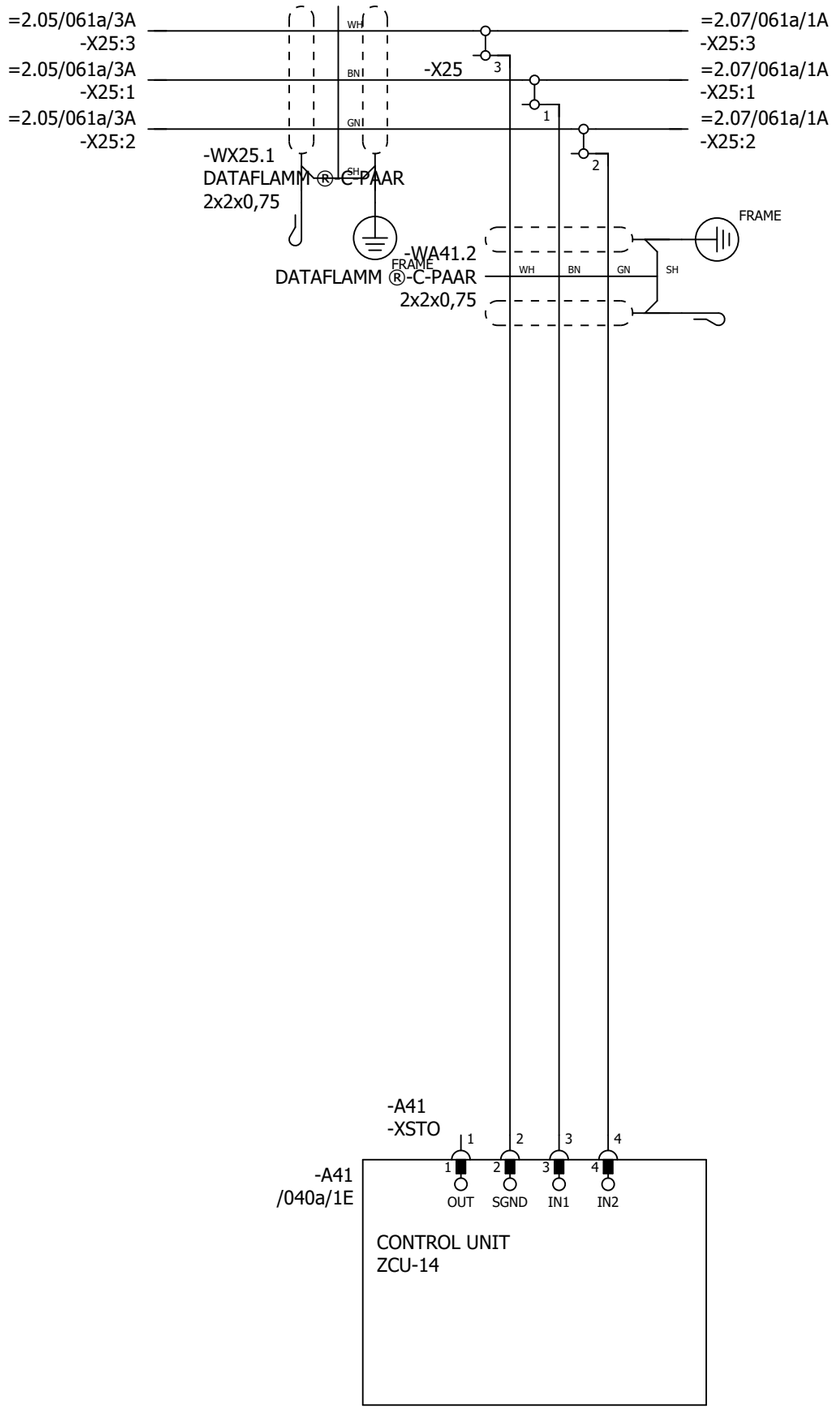

P345812 / 29711

SAFETY CIRCUIT
MACRO REVISION 6
RULES CONVERTED 19.7.2023

Cust. Doc. No.	Prep. Sky-Xin Zhang 02.08.2023	Title SAFETY CIRCUIT	Circuit diagram EFS2	Item Des.	
Cust. Ref. No.	App.	INV2.06	SAP Doc. No.	= 2.06	
Customer WMMP	Project Zhaka Jack-up Lift System	ACS880-107-0078A-3	EPLAN Doc. No. 3ABDC230674 - 2.06	+ 2.01.1	
	Zhaka Jack-up Lift System-1	400V	ABB Ref. No.	Rev. .1	Sheet 061a
			Resp. Dept.	Cont.	&MPC/Part list_1

Part list: 3ABDC230674DU02018

Item	Sort String	Qty.Str	Unit	Component Number	Description and text	Technical data
0010		1.000	ST		ACS880-107-0078A-3+A012+B053+C121+C132+	
0020		1.000	ST		_C206+E210+F272+F287+F288+G300+G307+G315	
0030		1.000	ST		_+G320+G330+G344+H352+H367+K450+K492+L50	
0040		1.000	ST		_3+P913+Q964	
0050		1.000	ST		=2.06	
0060		1.000	ST		+2.01.1,INU3	
0070		1.000	ST		Powerconversionequipment	
0080	-A41_MEM	1.000	PC	3AXD50000006010	MEMORY UNIT KIT ZMU-02	
0090	-T11	1.000	PC	3AUA0000120009-M	ACS880-104-0078A-3+P922	+P922
0100	SCREW	1.000	PC	3AFE68681481	SCREW K30X10 TORX	PT WN1452 ZN
0110	SOFTWARE	1.000	PC	3AUA0000153462	SOFTWARE PRIMARY CONTROL PROGRA	AINF6 FOR ZCU-12/14
0120		1.000	ST		R4imoduleDCfuse	
0130	-F11.1-2	2.000	PC	3AXD50000000219	FUSE FR27UQ69V160T/160A	6.921 CP URQ 27X60MM FERRULE;AR
0140		1.000	ST		R3i-R4imoduleDCfusebase	
0150	(-F11.1-2)	2.000	PC	3AUA0000089227	FUSE HOLDER FUSE BASE US271MI 150A	FUSE BASE US271MI 150A 800V
0160		1.000	ST		24VDCsupplyZCU	
0170	-WA41_1	1.000	PC	3AXD50000005218	WIRE HARNESS 24VDC SUPPLY X51 ZCU V	HALOGEN FREE;X51_A51
0180		1.000	ST		Rooffancontrol	
0190	-WA41_3	1.000	PC	3AXD50000002688	WIRE HARNESS FAN CONTROL MAIN WIRE	HALOGEN FREE;X208_X26.3
0200		1.000	ST		Bottomrowmodulewireharness	
0210	-WT11	1.000	PC	3AXD50000002418	WIRE HARNESS R4I FUSE_MODULE BR V2	HALOGEN FREE;MAIN CIRCUIT WIRE SET
0220		1.000	ST		Optionmodule	
0230	-A418.1	1.000	PC	3AUA0000107392	COMMUNIC. ADAPTER FDCO-01	
0240		1.000	ST		Controlpanel	
0250	-A47	1.000	PC	3AUA0000108650	FIELDBUS KIT FDPI-02	PANEL BUS ADAPTER
0260		1.000	ST		DCfusesupervision	
0270	-K11.1-2	2.000	PC	3AXD50000021313	RELAY DEK_REL_G24/21	250 V;6 A;COIL 24VDC
0280		1.000	ST		FieldBus	
0290	-A438.1	1.000	PC	3AXD50000192779	OPTION MODULE FPNO-21	PROFINET IO
0300		1.000	ST		Supplementtorelay	
0310	(-K11.1)	1.000	PC	3AXD50000021312	TERMINAL BLOCK ST EB2_DIK_RD 2716693	2POLE, 6,15 MM PITCH;FOR DEK RELAYS

P345812 / 29711

Cust. Doc. No.	Prep.	Title PART LIST INV2.06 ACS880-107-0078A-3 400V	Item Des. = 2.06 +
Cust. Ref. No.	App.		SAP Doc. No.
Customer WMMP	Project Zhaka Jack-up Lift System Zhaka Jack-up Lift System-1		EPLAN Doc. No. 3ABDC230674 - 2.06
			ABB Ref. No. / Rev. / Sheet Part list_1
			Resp. Dept. / Cont. &EMA/1

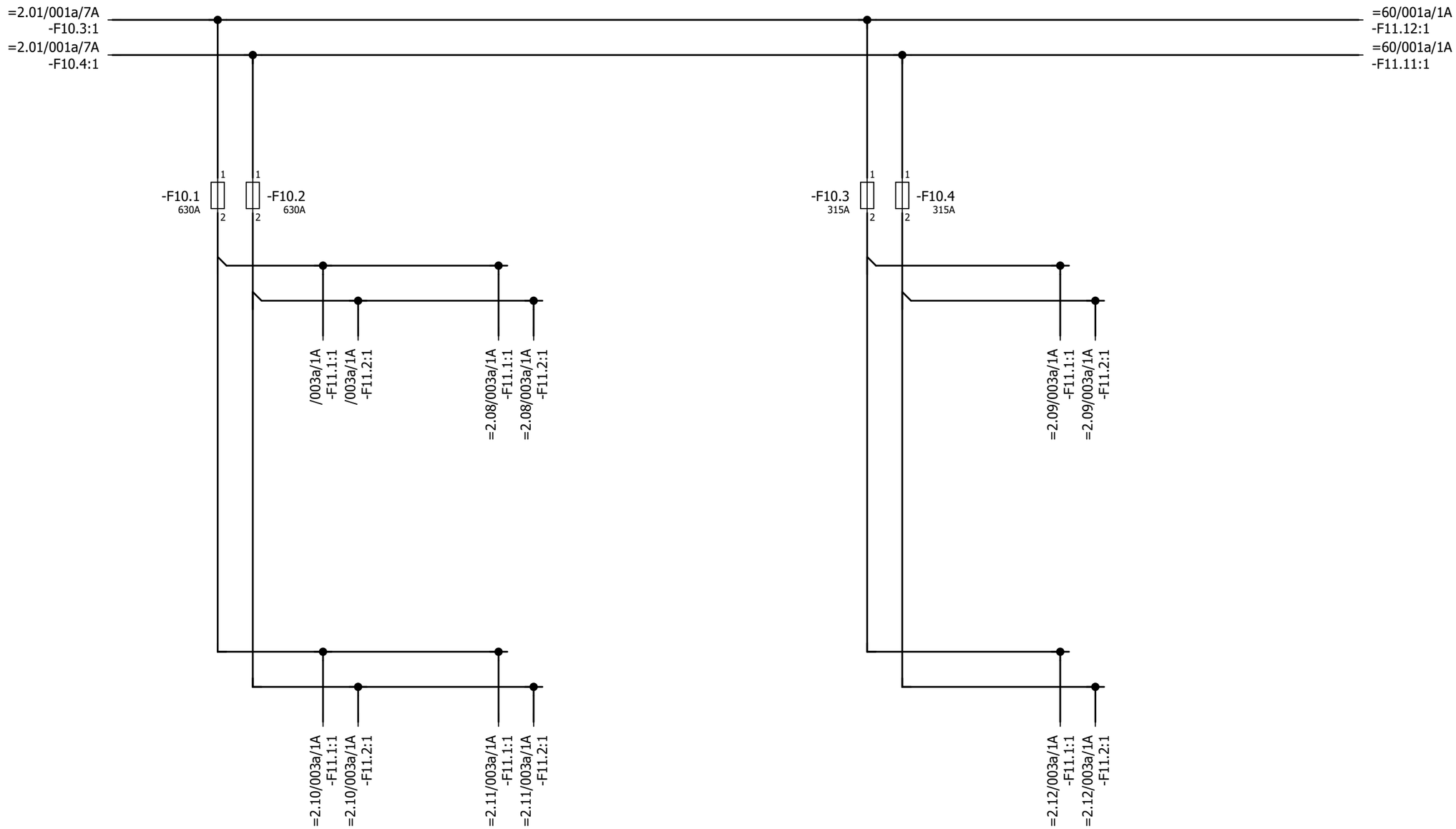

P345812 / 29711

Cust. Doc. No.	Prep. Sky-Xin Zhang 02.08.2023	Title MAIN CIRCUIT INV2.07 ACS880-107-0078A-3 400V	Circuit diagram EFS2
Cust. Ref. No.	App.		SAP Doc. No.
Customer WMMP	Project Zhaka Jack-up Lift System Zhaka Jack-up Lift System-1		EPLAN Doc. No. 3ABDC230674 - 2.07
			ABB Ref. No.
			Resp. Dept.

Item Des.
= 2.07
+ 2.07.1

Rev. .1 Sheet 001a
Cont. 003a

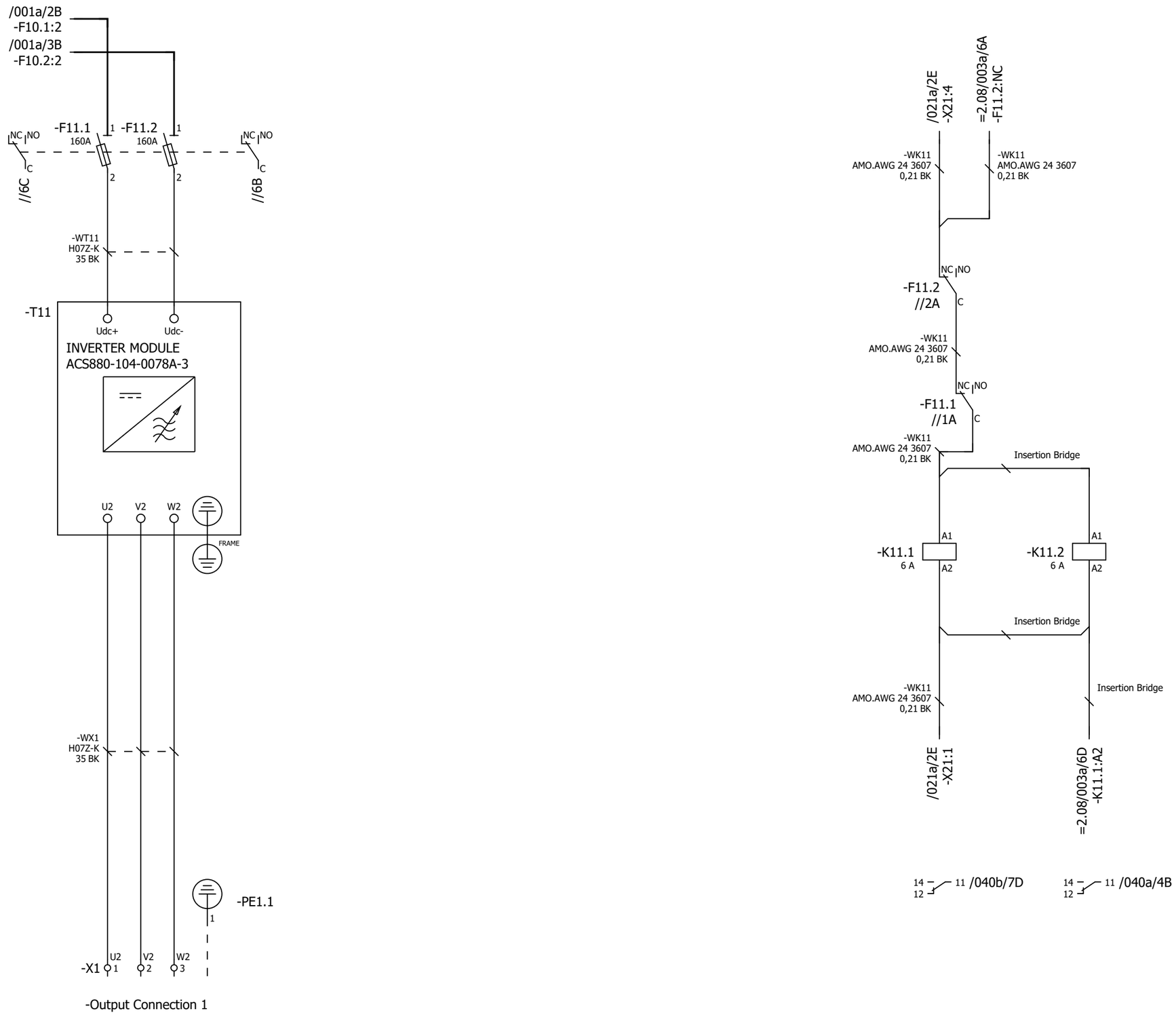

P345812 / 29711

Cust. Doc. No.	Prep. Sky-Xin Zhang 02.08.2023	Title MAIN CIRCUIT	Circuit diagram EFS2
Cust. Ref. No.	App.	INV2.07	SAP Doc. No.
Customer WMMP	Project Zhaka Jack-up Lift System	ACS880-107-0078A-3	EPLAN Doc. No. 3ABDC230674 - 2.07
	Zhaka Jack-up Lift System-1	400V	ABB Ref. No.
			Resp. Dept.

Item Des.
= 2.07
+ 2.07.1

Rev. .1 Sheet 003a
Cont. 020a

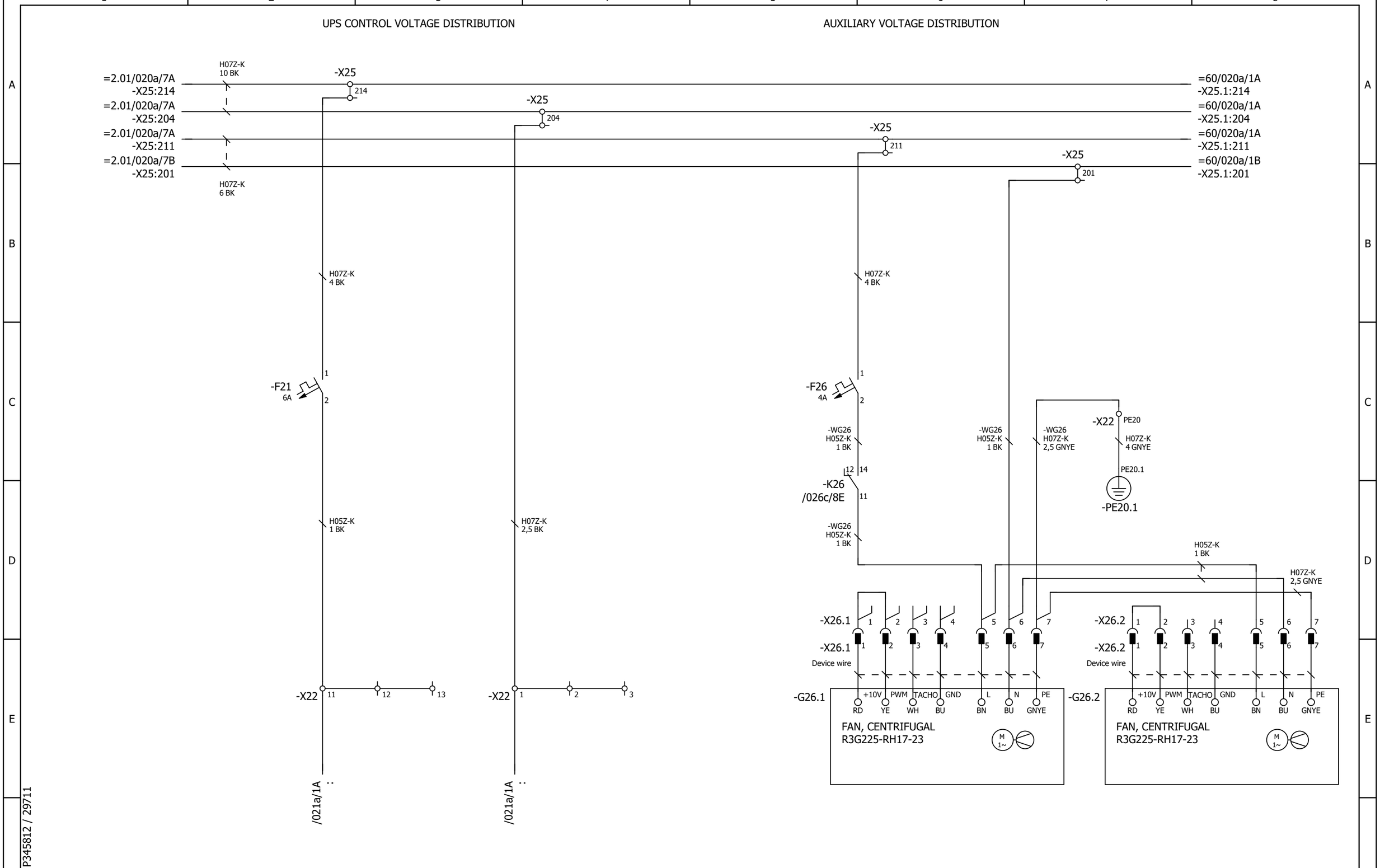

P345812 / 29711

Cust. Doc. No.	Prep. Sky-Xin Zhang 02.08.2023	Title AUXILIARY VOLTAGE DISTRIBUTION	Circuit diagram EFS2	Item Des.	
Cust. Ref. No.	App.	INV2.07	SAP Doc. No.	= 2.07	
Customer WMMP	Project Zhaka Jack-up Lift System	ACS880-107-0078A-3	EPLAN Doc. No. 3ABDC230674 - 2.07	+ 2.07.1	
	Zhaka Jack-up Lift System-1	400V	ABB Ref. No.	Rev. .1	Sheet 020a
			Resp. Dept.	Cont.	021a

24V CONTROL VOLTAGE DISTRIBUTION

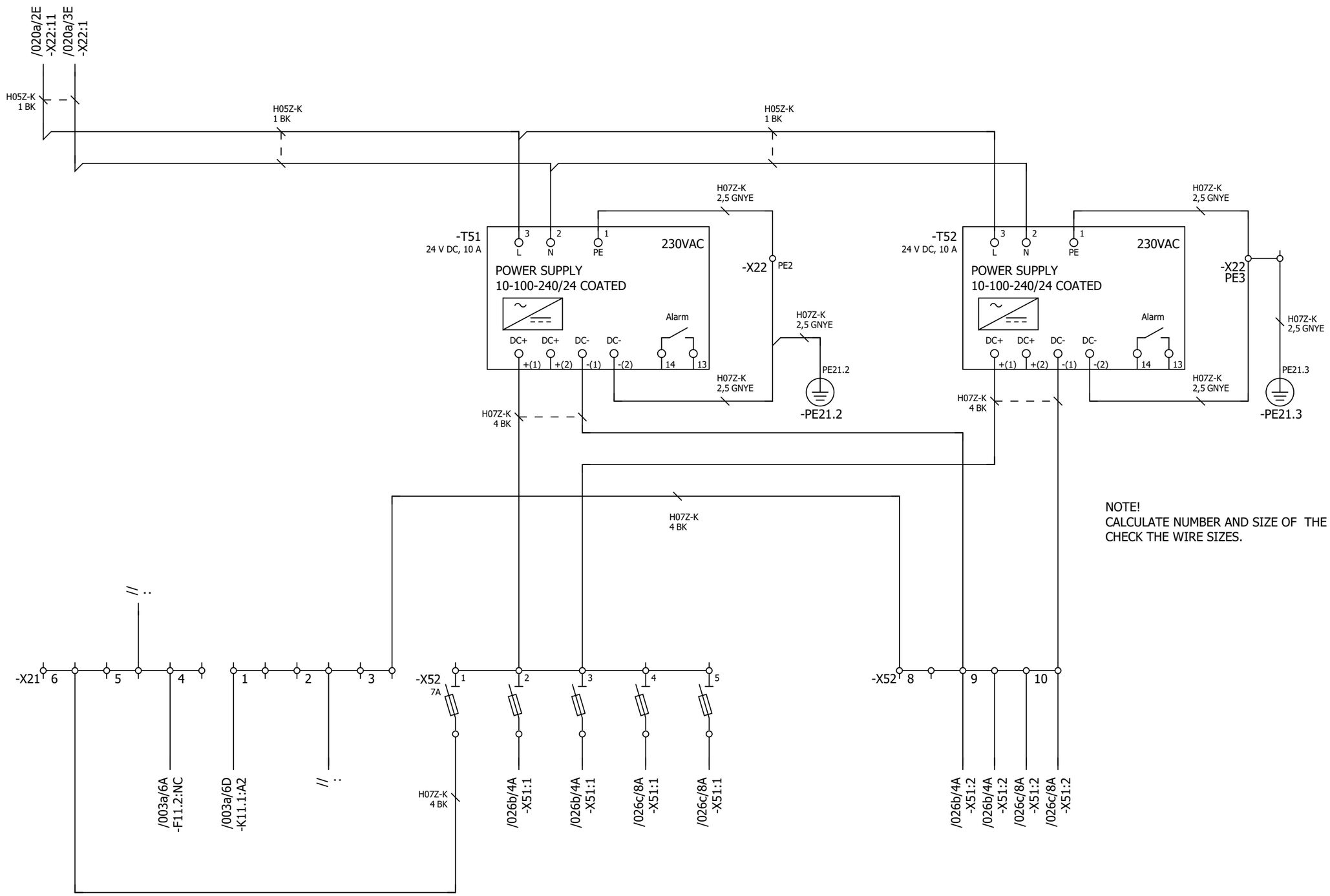

P345812 / 29711

Cust. Doc. No.	Prep. Sky-Xin Zhang 02.08.2023	Title AUXILIARY VOLTAGE DISTRIBUTION	Circuit diagram EFS2	Item Des.	
Cust. Ref. No.	App.	INV2.07	SAP Doc. No.	= 2.07	
Customer WMMP	Project Zhaka Jack-up Lift System	ACS880-107-0078A-3	EPLAN Doc. No. 3ABDC230674 - 2.07	+ 2.07.1	
	Zhaka Jack-up Lift System-1	400V	ABB Ref. No.	Rev. .1	Sheet 021a
			Resp. Dept.	Cont.	026a

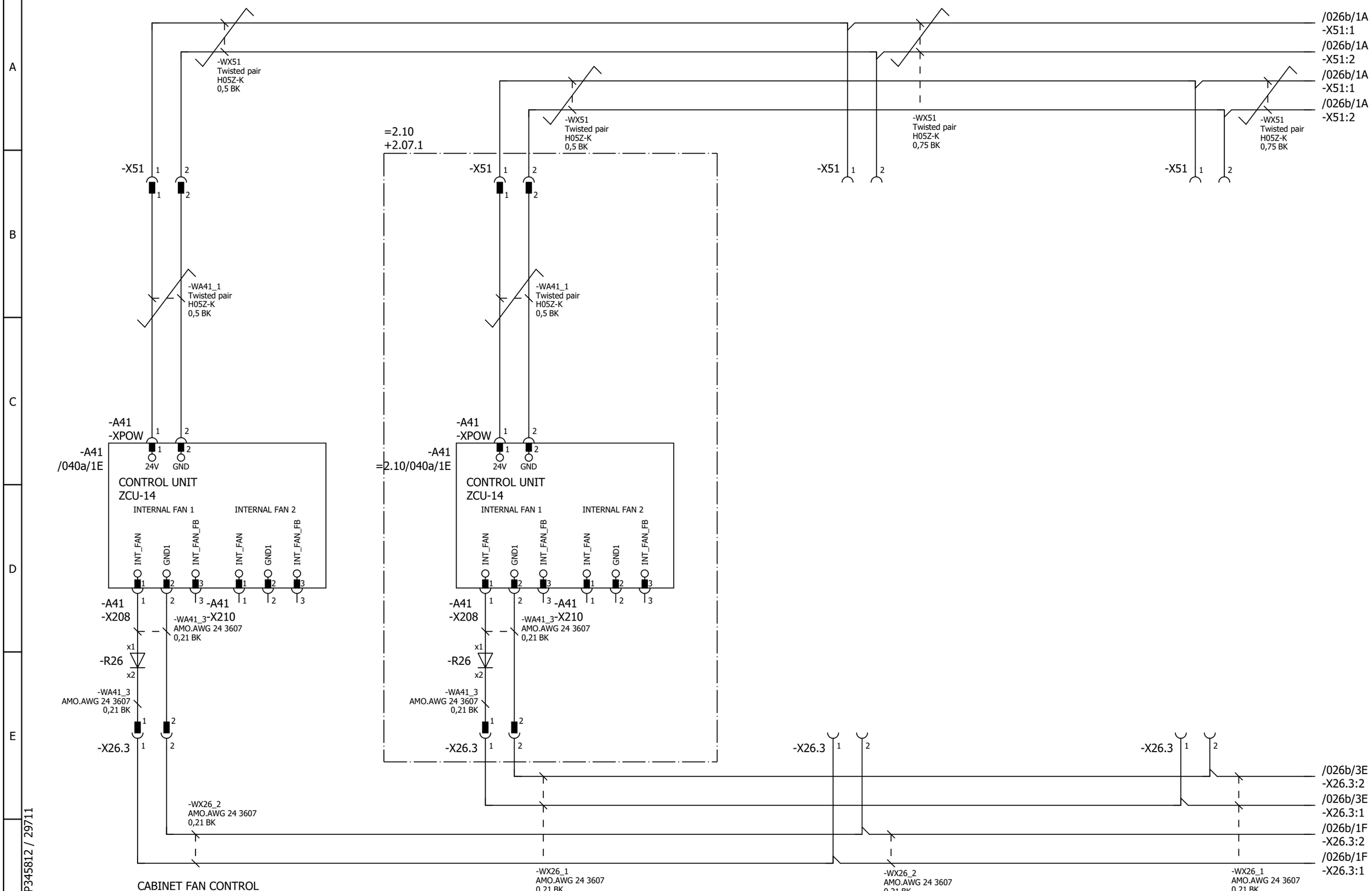

Cust. Doc. No.	Prep. Sky-Xin Zhang 02.08.2023	Title CABINET FAN CONTROL ZCU UPS, 24V FSO, FEA	Circuit diagram EFS2
Cust. Ref. No.	App.	INV2.07	SAP Doc. No.
Customer WMMP	Project Zhaka Jack-up Lift System	ACS880-107-0078A-3	EPLAN Doc. No. 3ABDC230674 - 2.07
	Zhaka Jack-up Lift System-1	400V	ABB Ref. No.
			Resp. Dept.

Item Des. = 2.07 + 2.07.1

Rev. .1 Sheet 026a

Cont. 026b

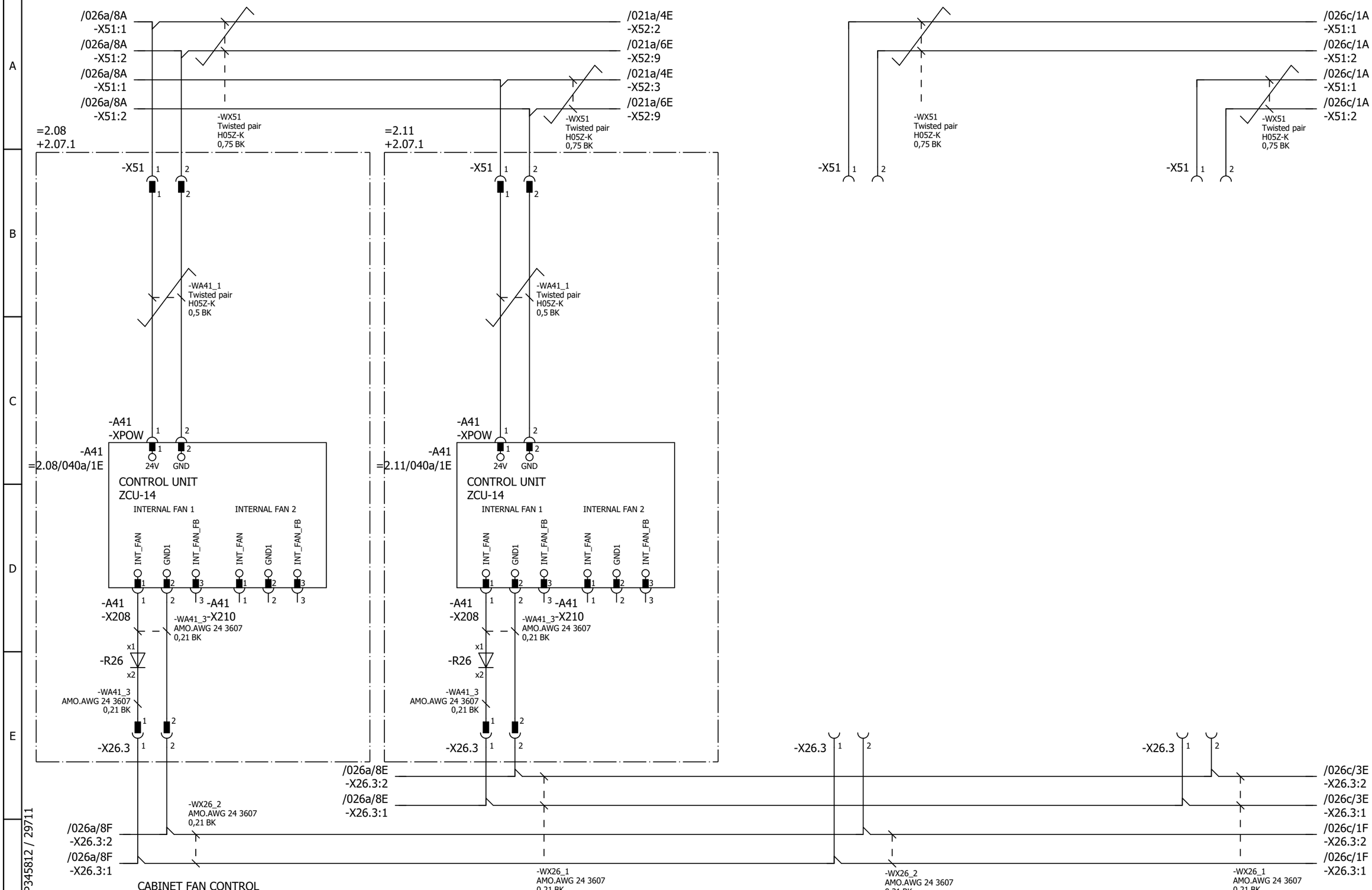

Cust. Doc. No.	Prep. Sky-Xin Zhang 02.08.2023	Title CABINET FAN CONTROL ZCU UPS, 24V FSO, FEA	Circuit diagram EFS2 / Item Des.
Cust. Ref. No.	App.	INV2.07	SAP Doc. No. / = 2.07
Customer WMMP	Project Zhaka Jack-up Lift System	ACS880-107-0078A-3	EPLAN Doc. No. 3ABDC230674 - 2.07 / + 2.07.1
	Zhaka Jack-up Lift System-1	400V	ABB Ref. No. / Rev. .1 / Sheet 026b
			Resp. Dept. / Cont. 026c

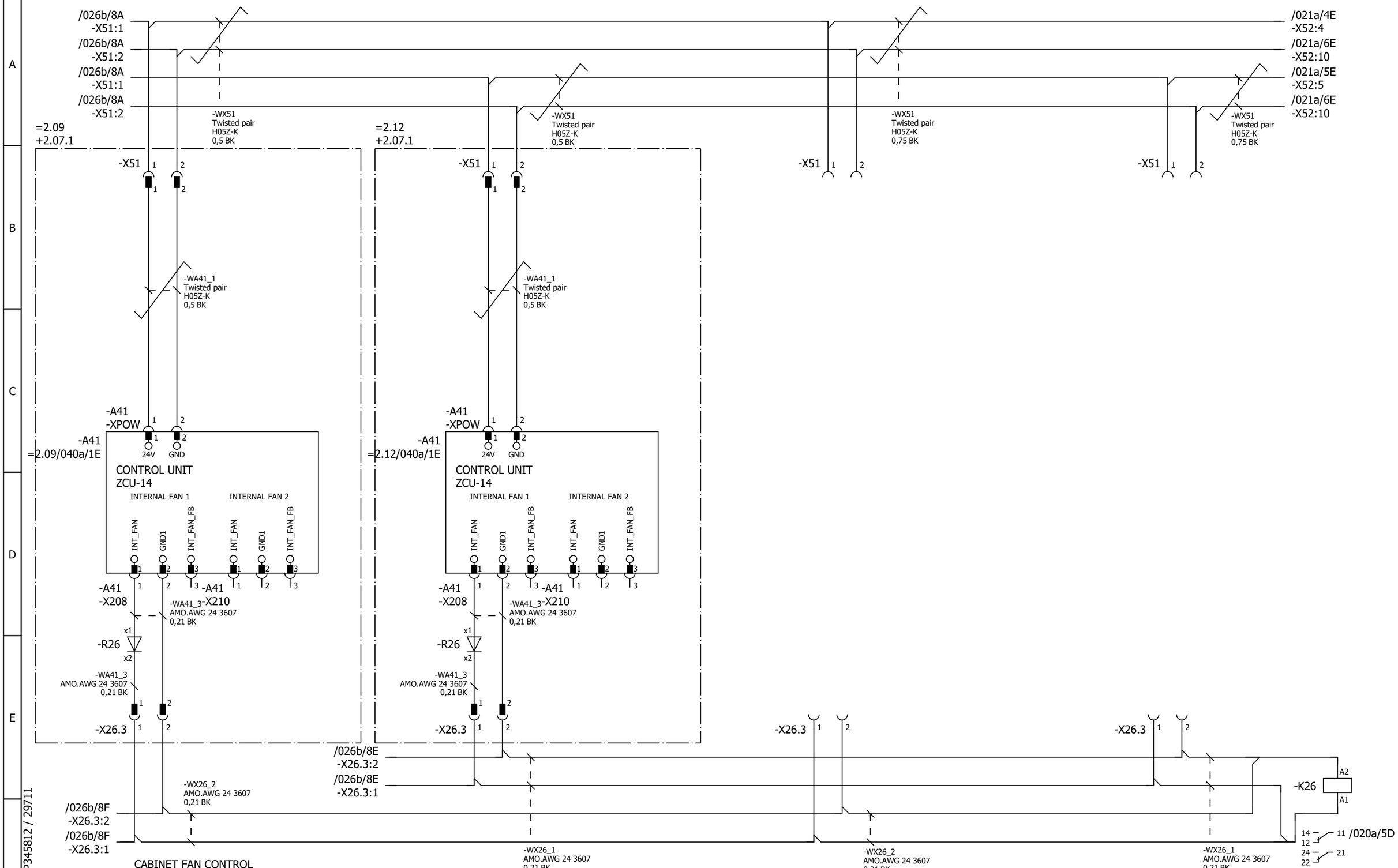

Cust. Doc. No.	Prep. Sky-Xin Zhang 02.08.2023	Title CABINET FAN CONTROL ZCU UPS, 24V FSO, FEA	Circuit diagram EFS2
Cust. Ref. No.	App.	INV2.07	SAP Doc. No.
Customer WMMP	Project Zhaka Jack-up Lift System	ACS880-107-0078A-3	EPLAN Doc. No. 3ABDC230674 - 2.07
	Zhaka Jack-up Lift System-1	400V	ABB Ref. No.
			Resp. Dept.

Item Des. = 2.07 + 2.07.1

Rev. .1 Sheet 026c

Cont. 040a

*) GEN.H05Z-K BK 1,0

Control and status signals	Terminal	Pin
E-STOP FEEDBACK 1 - ESTOP ACTIVE	-XRO1	12
RUNNING 1 - RUNNING	-XRO2	22
FAULT (-1) 1 - NO FAULT	-XRO3	32

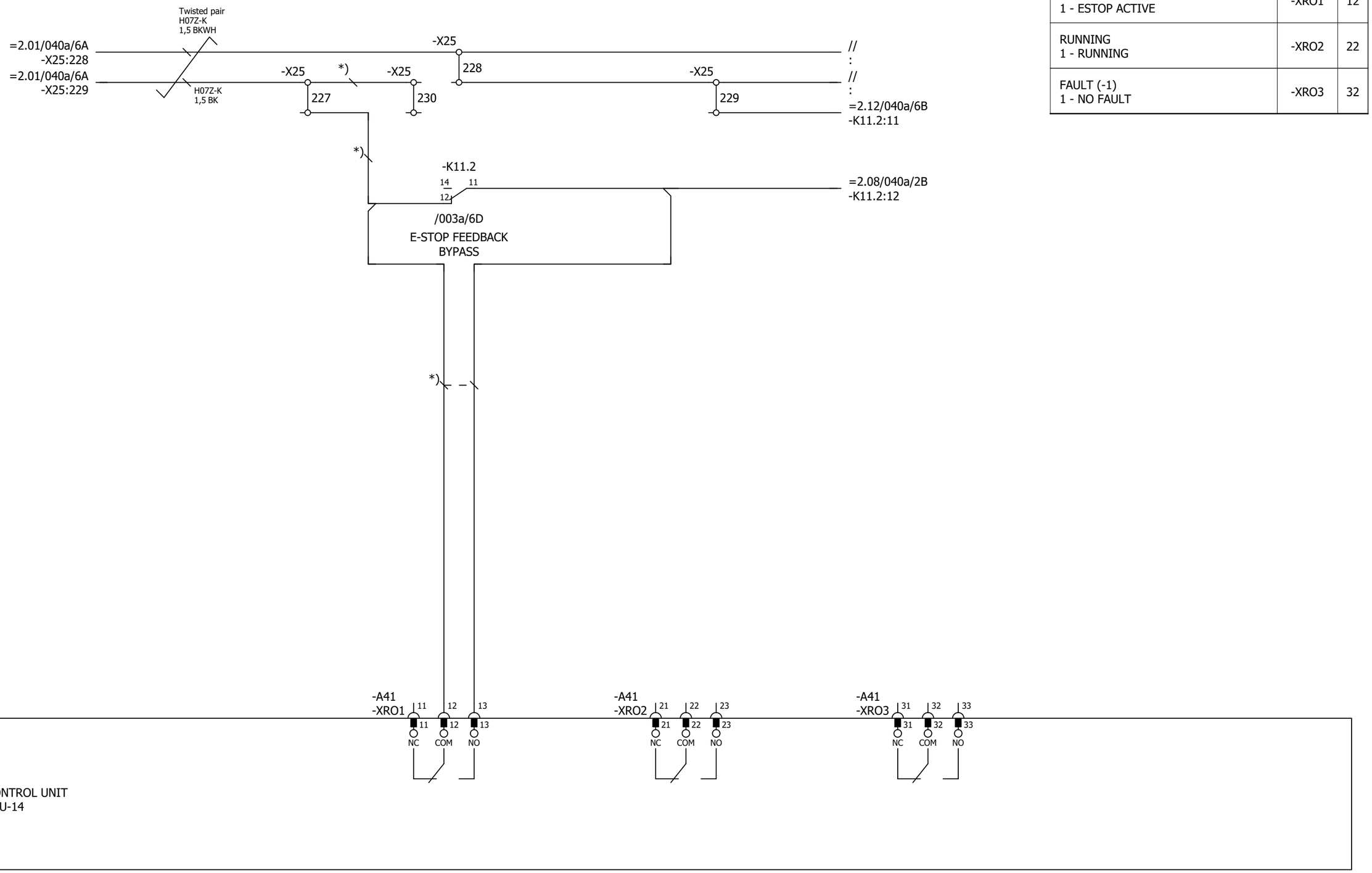

P345812 / 29711

Cust. Doc. No.	Prep. Sky-Xin Zhang 02.08.2023	Title CONTROL BOARD INV2.07 ACS880-107-0078A-3 400V	Circuit diagram EFS2
Cust. Ref. No.	App.		SAP Doc. No.
Customer WMMP	Project Zhaka Jack-up Lift System Zhaka Jack-up Lift System-1		EPLAN Doc. No. 3ABDC230674 - 2.07
			ABB Ref. No.
			Resp. Dept.

Item Des.
= 2.07
+ 2.07.1

Rev. .1 Sheet 040a
Cont. 040b

Control and status signals	Terminal	Pin
DIGITAL INTERLOCK	-XD24	1
START/STOP 1 - START	-XDI	1
FORWARD/REVERSE 1 - REVERSE	-XDI	2
RESET	-XDI	3
EMERGENCY STOP 0 - ACTIVE	-XDI	4
NOT SPECIFIED	-XDI	5
DI6 NOT IN USE	-XDI	6
OUTPUT: READY	-XDIO	1
OUTPUT: RUNNING	-XDIO	2

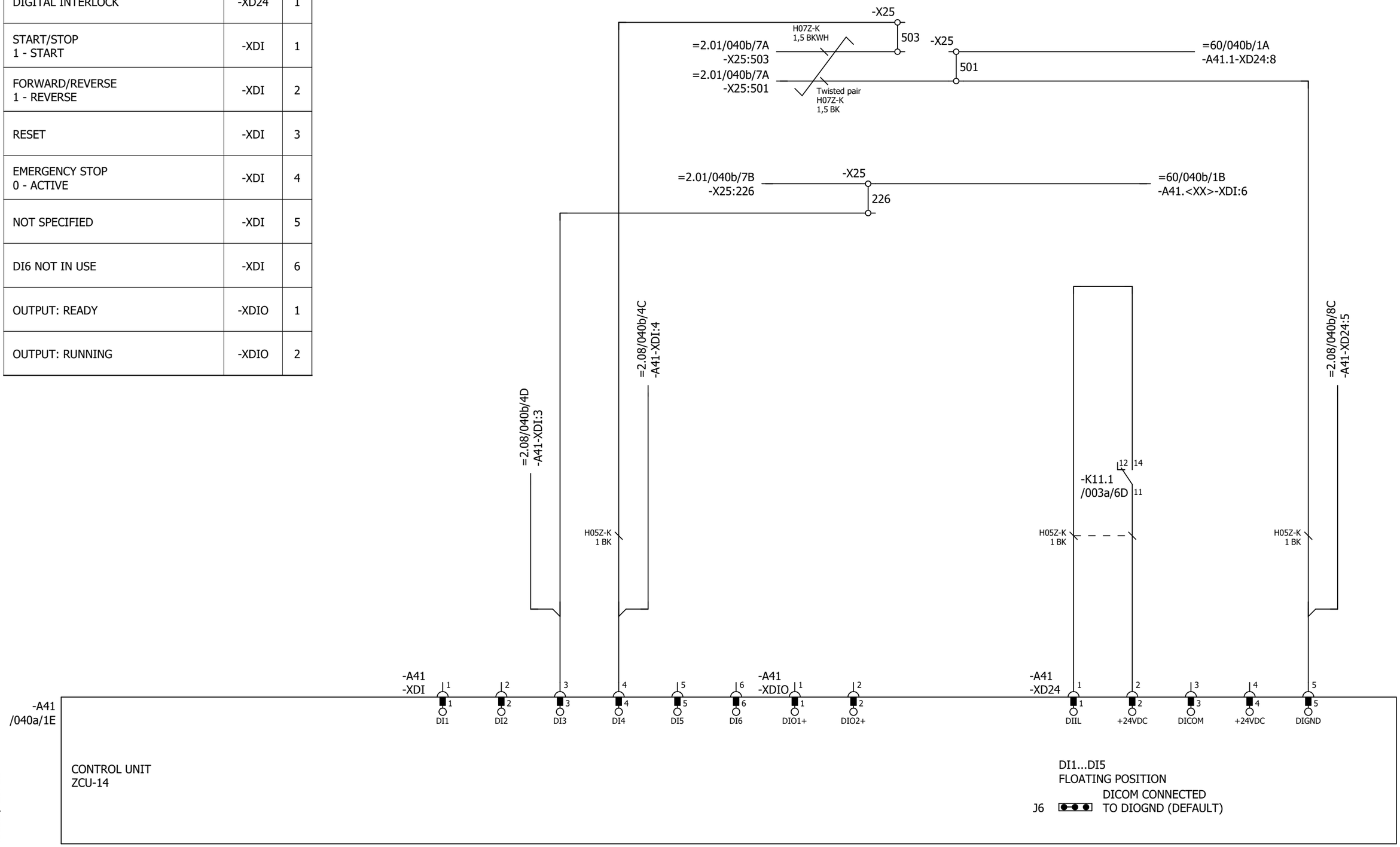

P345812 / 29711

Cust. Doc. No.	Prep. Sky-Xin Zhang 02.08.2023	Title CONTROL BOARD INV2.07 ACS880-107-0078A-3 400V	Circuit diagram EFS2
Cust. Ref. No.	App.		SAP Doc. No.
Customer WMMP	Project Zhaka Jack-up Lift System Zhaka Jack-up Lift System-1		EPLAN Doc. No. 3ABDC230674 - 2.07
			ABB Ref. No.
			Resp. Dept.

Item Des.
= 2.07
+ 2.07.1

Rev. .1 Sheet 040b
Cont. 040c

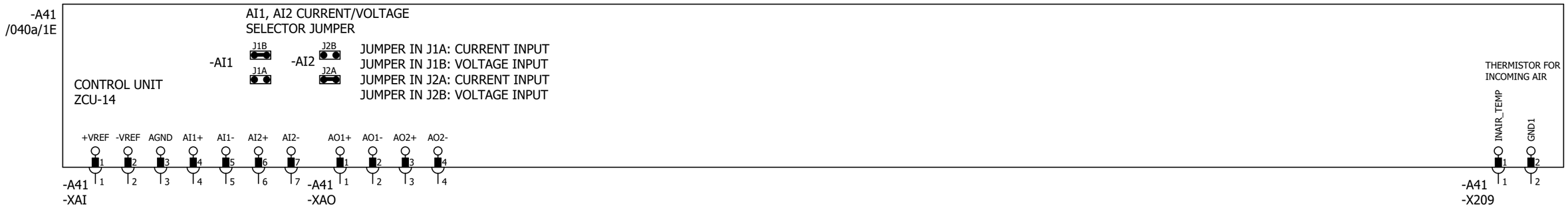

Control and status signals	Terminal	Pin
MOTOR TEMP. MONITORING 0(2)…10V	-XAI	4
AI2 NOT SPECIFIED BY DEFAULT NOT IN USE 0(4)…20mA	-XAI	6
CURR SOU MOT TEMP MONIT 0(4)...20mA	-XAO	1
CURRENT 0(4)…20mA ↔ 0(4)…MOTOR CURRENT	-XAO	3

P345812 / 29711

Cust. Doc. No.	Prep. Sky-Xin Zhang 02.08.2023	Title CONTROL BOARD INV2.07 ACS880-107-0078A-3 400V	Circuit diagram EFS2
Cust. Ref. No.	App.		SAP Doc. No.
Customer WMMP	Project Zhaka Jack-up Lift System Zhaka Jack-up Lift System-1		EPLAN Doc. No. 3ABDC230674 - 2.07
			ABB Ref. No.
			Resp. Dept.

Item Des.
= 2.07
+ 2.07.1

Rev. .1 Sheet 040c
Cont. 040d

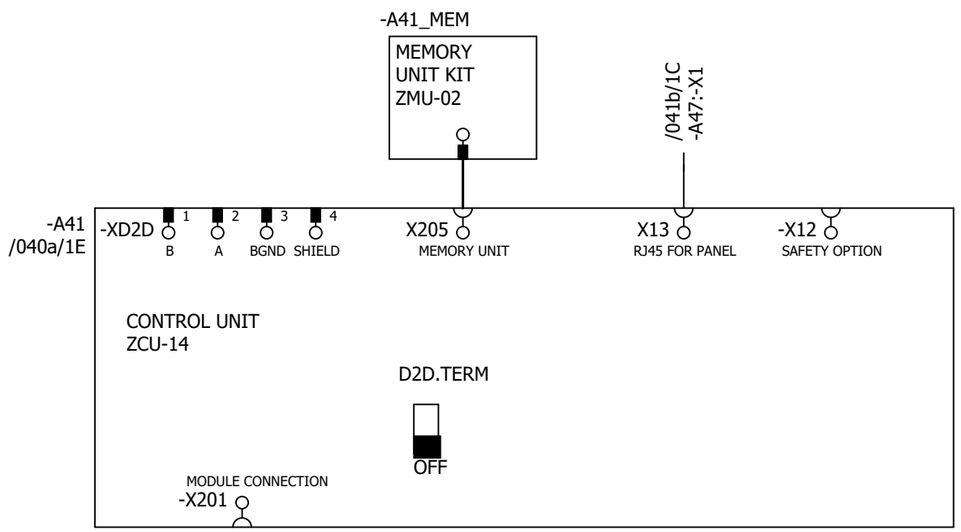

P345812 / 29711

Cust. Doc. No.	Prep. Sky-Xin Zhang 02.08.2023	Title CONTROL BOARD	Circuit diagram EFS2	Item Des.	
Cust. Ref. No.	App.	INV2.07	SAP Doc. No.	= 2.07	
Customer WMMP	Project Zhaka Jack-up Lift System	ACS880-107-0078A-3	EPLAN Doc. No. 3ABDC230674 - 2.07	+ 2.07.1	
	Zhaka Jack-up Lift System-1	400V	ABB Ref. No.	Rev. .1	Sheet 040d
			Resp. Dept.	Cont.	041a

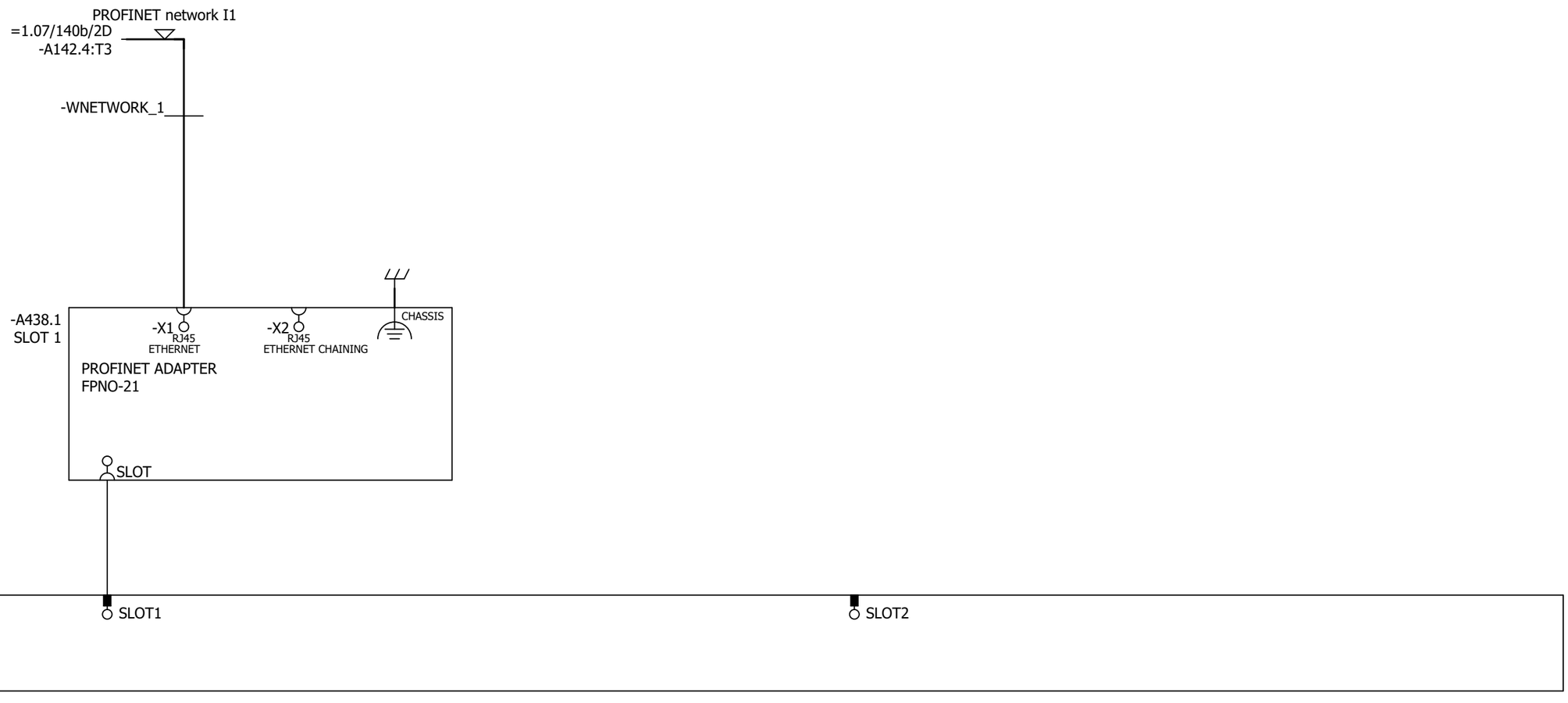

Cust. Doc. No.	Prep. Sky-Xin Zhang 02.08.2023	Title OPTION CARDS INV2.07 ACS880-107-0078A-3 400V	Circuit diagram EFS2
Cust. Ref. No.	App.		SAP Doc. No.
Customer WMMP	Project Zhaka Jack-up Lift System Zhaka Jack-up Lift System-1		EPLAN Doc. No. 3ABDC230674 - 2.07
			ABB Ref. No.
			Resp. Dept.

Item Des.
= 2.07
+ 2.07.1

Rev. .1 Sheet 041a
Cont. 041b

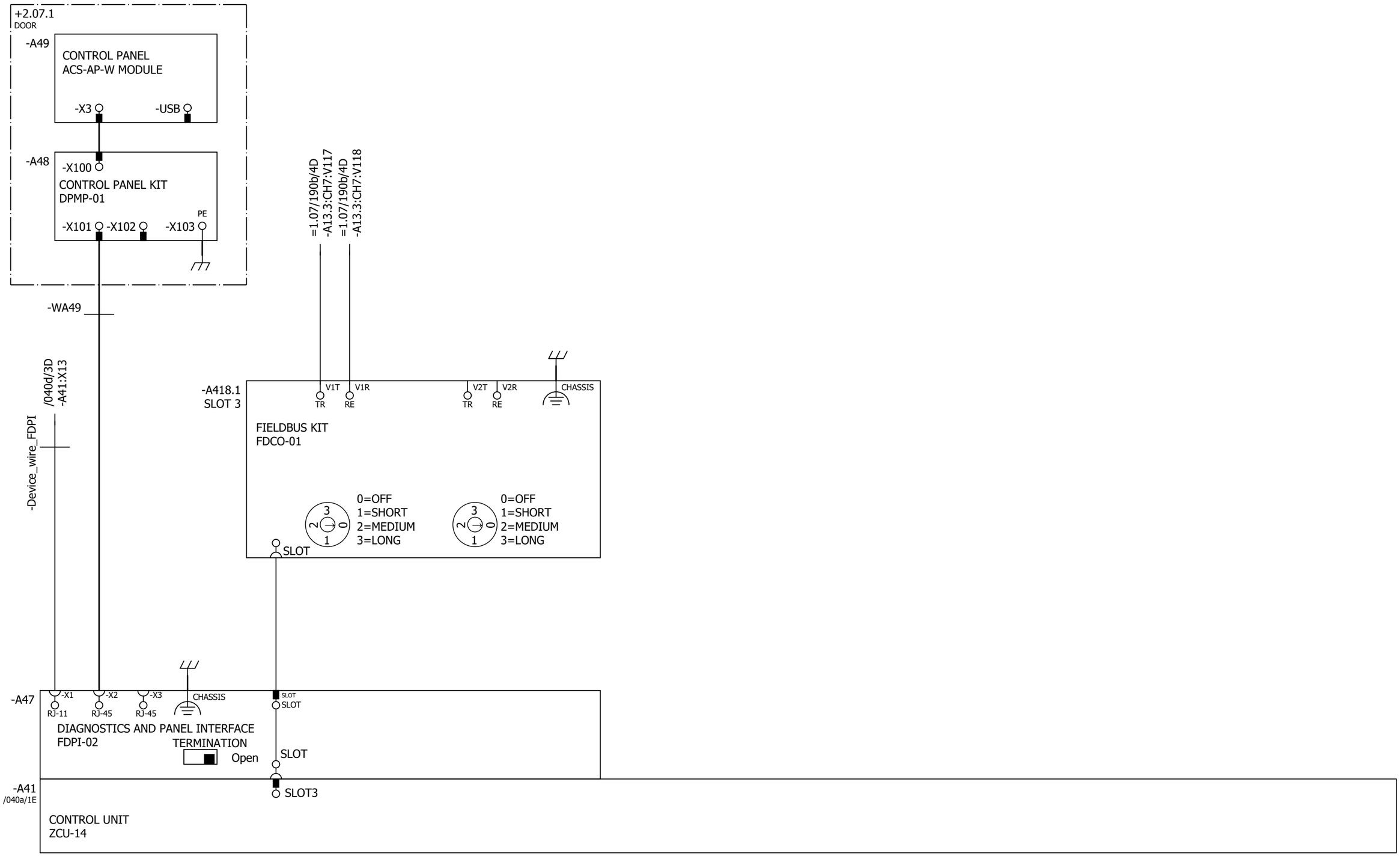

Cust. Doc. No.	Prep. Sky-Xin Zhang 02.08.2023	Title OPTION CARDS	Circuit diagram EFS2	Item Des.	
Cust. Ref. No.	App.	INV2.07	SAP Doc. No.	= 2.07	
Customer WMMP	Project Zhaka Jack-up Lift System	ACS880-107-0078A-3	EPLAN Doc. No. 3ABDC230674 - 2.07	+ 2.07.1	
	Zhaka Jack-up Lift System-1	400V	ABB Ref. No.	Rev. .1	Sheet 041b
			Resp. Dept.	Cont.	061a

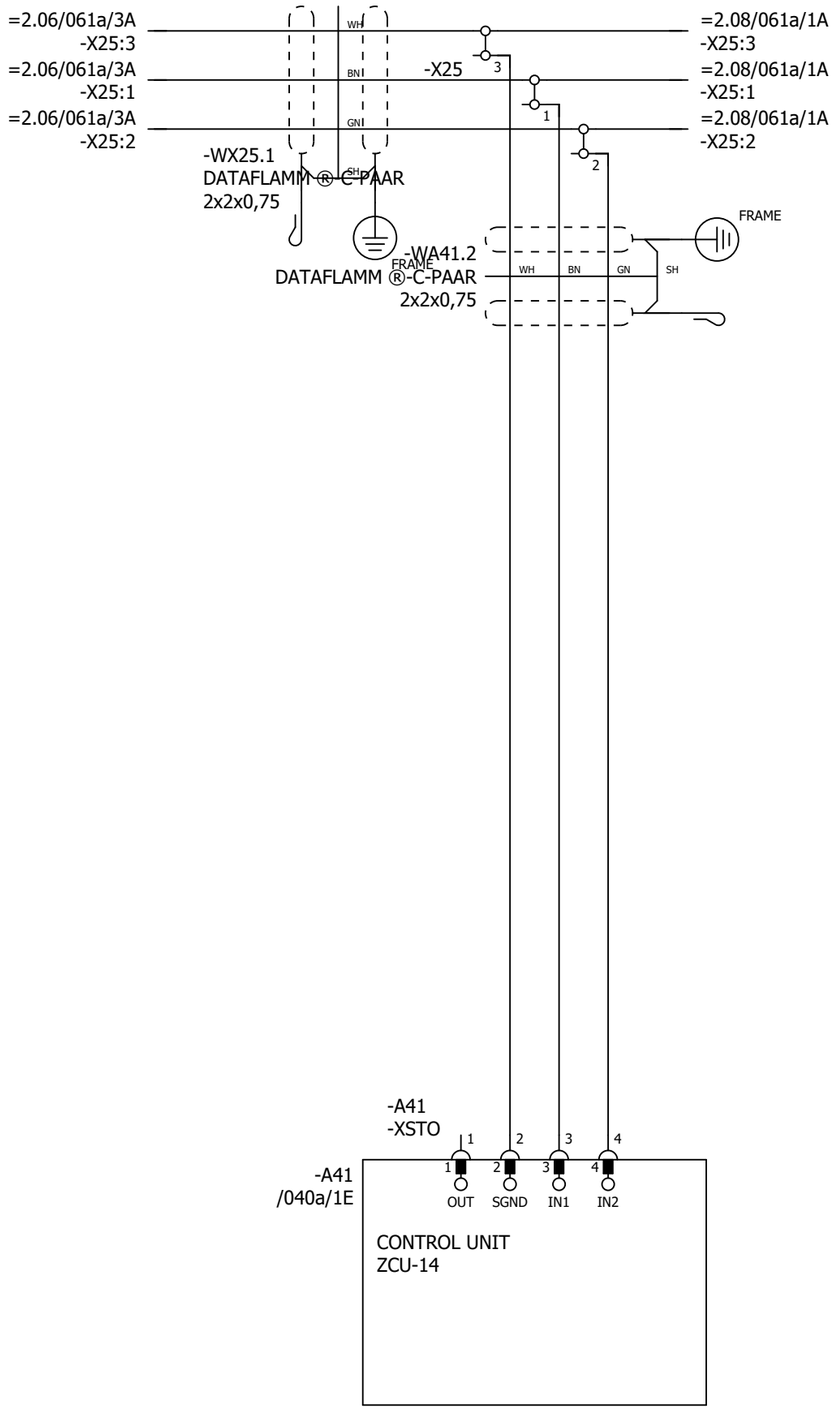

P345812 / 29711

SAFETY CIRCUIT
MACRO REVISION 6
RULES CONVERTED 19.7.2023

Cust. Doc. No.	Prep. Sky-Xin Zhang 02.08.2023	Title SAFETY CIRCUIT INV2.07 ACS880-107-0078A-3 400V	Circuit diagram EFS2
Cust. Ref. No.	App.		SAP Doc. No.
Customer WMMP	Project Zhaka Jack-up Lift System Zhaka Jack-up Lift System-1		EPLAN Doc. No. 3ABDC230674 - 2.07
			ABB Ref. No.
			Resp. Dept.

Item Des.
= 2.07
+ 2.07.1

Rev. .1 Sheet 061a
Cont. 095a

CABINET
HEATING

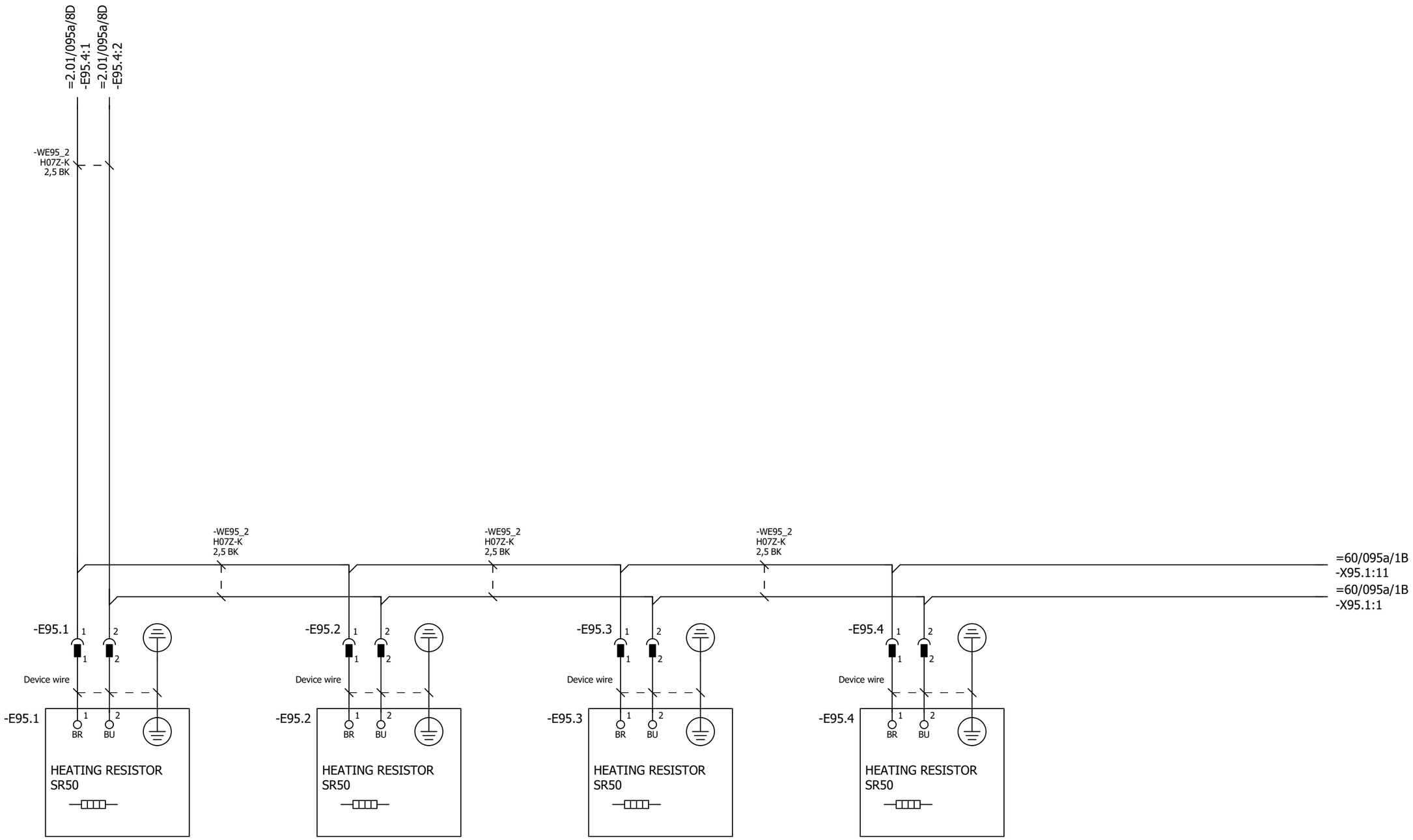

P345812 / 29711

Cust. Doc. No.	Prep. Sky-Xin Zhang 02.08.2023	Title CABINET HEATING	Circuit diagram EFS2	Item Des.	
Cust. Ref. No.	App.	INV2.07	SAP Doc. No.	= 2.07	
Customer WMMP	Project Zhaka Jack-up Lift System	ACS880-107-0078A-3	EPLAN Doc. No. 3ABDC230674 - 2.07	+ 2.07.1	
	Zhaka Jack-up Lift System-1	400V	ABB Ref. No.	Rev. .1	Sheet 095a
			Resp. Dept.	Cont.	&MPC/Part list_1

Part list: 3ABDC230674DU02019

Item	Sort String	Qty.Str	Unit	Component Number	Description and text	Technical data
0010		1.000	ST		ACS880-107-0078A-3+A012+B053+C121+C132+	
0020		1.000	ST		_C206+E210+F272+F287+F288+G300+G307+G315	
0030		1.000	ST		_+G320+G330+G344+H352+H367+J400+K492+L50	
0040		1.000	ST		_3+P913+Q964	
0050		1.000	ST		=2.07	
0060		1.000	ST		+2.07.1,INU3	
0070		1.000	ST		Powerconversionequipment	
0080	-A41_MEM	1.000	PC	3AXD50000006010	MEMORY UNIT KIT ZMU-02	
0090	-T11	1.000	PC	3AUA0000120009-M	ACS880-104-0078A-3+P922	+P922
0100	SCREW	1.000	PC	3AFE68681481	SCREW K30X10 TORX	PT WN1452 ZN
0110	SOFTWARE	1.000	PC	3AUA0000153462	SOFTWARE PRIMARY CONTROL PROGRA	AINF6 FOR ZCU-12/14
0120		1.000	ST		R4imoduleDCfuse	
0130	-F11.1-2	2.000	PC	3AXD50000000219	FUSE FR27UQ69V160T/160A	6.921 CP URQ 27X60MM FERRULE;AR
0140		1.000	ST		R3i-R4imoduleDCfusebase	
0150	(-F11.1-2)	2.000	PC	3AUA0000089227	FUSE HOLDER FUSE BASE US271MI 150A	FUSE BASE US271MI 150A 800V
0160		1.000	ST		motorterminalR4i,coppercable	
0170	-X1	1.000	PC	3ABD50000000270	CONNECTOR PPAC-50	50 MM2;150 A;800V
0180	-X1	1.000	PC	3ABD50000000270	CONNECTOR PPAC-50	50 MM2;150 A;800V
0190	-X1	1.000	PC	3ABD50000000270	CONNECTOR PPAC-50	50 MM2;150 A;800V
0200		1.000	ST		24VDCsupplyZCU	
0210	-WA41_1	1.000	PC	3AXD50000005218	WIRE HARNESS 24VDC SUPPLY X51 ZCU V	HALOGEN FREE;X51_A51
0220		1.000	ST		Rooffancontrol	
0230	-WA41_3	1.000	PC	3AXD50000002688	WIRE HARNESS FAN CONTROL MAIN WIRE	HALOGEN FREE;X208_X26.3
0240		1.000	ST		Toprowmodulewireharness	
0250	-WT11	1.000	PC	3AXD50000002256	WIRE HARNESS R4I FUSE_MODULE V2	HALOGEN FREE;MAIN CIRCUIT WIRE SET
0260	-WX1	1.000	PC	3AXD50000002258	WIRE HARNESS R4I MODULE_OUTPUT TR V	HALOGEN FREE;MAIN CIRCUIT WIRE SET
0270		1.000	ST		Optionmodule	
0280	-A418.1	1.000	PC	3AUA0000107392	COMMUNIC. ADAPTER FDCO-01	
0290		1.000	ST		Controlpanel	
0300	-A47	1.000	PC	3AUA0000108650	FIELDBUS KIT FDPI-02	PANEL BUS ADAPTER
0310	-A48	1.000	PC	3AUA0000108878	CONTROL PANEL KIT DPMP-01	DPMP-01
0320	-A49	1.000	PC	3AXD50000025964	CONTROL PANEL ACS-AP-W MODULE	ASSISTANT PANEL WIRELESS CPU1
0330		1.000	ST		DCfusesupervision	

P345812 / 29711

Cust. Doc. No.	Prep.	Title PART LIST INV2.07 ACS880-107-0078A-3 400V	Item Des. = 2.07 +
Cust. Ref. No.	App.		SAP Doc. No.
Customer WMMP	Project Zhaka Jack-up Lift System Zhaka Jack-up Lift System-1		EPLAN Doc. No. 3ABDC230674 - 2.07
			ABB Ref. No. / Rev. / Sheet Part list_1
			Resp. Dept. / Cont. Part list_2

Part list: 3ABDC230674DU02019

Item	Sort String	Qty.Str	Unit	Component Number	Description and text	Technical data
0340	-K11.1-2	2.000	PC	3AXD50000021313	RELAY DEK_REL_G24/21	250 V;6 A;COIL 24VDC
0350	-WK11	1.000	PC	3AXD50000003220	WIRE HARNESS 6 MODULE 800MM CABINET	HALOGEN FREE;DC FUSE SUPERVISION
0360	-WK11	1.000	PC	3AXD50000003227	WIRE HARNESS 1ST MODULE SUPERV 800M	HALOGEN FREE;DC FUSE SUPERVISION
0370	-WK11	1.000	PC	3AXD50000003228	WIRE HARNESS 2ND MODULE SUPERV 800M	HALOGEN FREE;DC FUSE SUPERVISION
0380	-WK11	1.000	PC	3AXD50000003229	WIRE HARNESS 3RD MODULE SUPERV 800M	HALOGEN FREE;DC FUSE SUPERVISION
0390	-WK11	1.000	PC	3AXD50000003230	WIRE HARNESS 4TH MODULE SUPERV 800M	HALOGEN FREE;DC FUSE SUPERVISION
0400	-WK11	1.000	PC	3AXD50000003231	WIRE HARNESS 5TH MODULE SUPERV 800M	HALOGEN FREE;DC FUSE SUPERVISION
0410	-WK11	1.000	PC	3AXD50000003232	WIRE HARNESS 6TH MODULE SUPERV 800M	HALOGEN FREE;DC FUSE SUPERVISION
0420		1.000	ST		FieldBus	
0430	-A438.1	1.000	PC	3AXD50000192779	OPTION MODULE FPNO-21	PROFINET IO
0440		1.000	ST		Supplementtorelay	
0450	(-K11.1)	1.000	PC	3AXD50000021312	TERMINAL BLOCK ST EB2_DIK_RD 2716693	2POLE, 6,15 MM PITCH;FOR DEK RELAYS
0460		1.000	ST		CommonDCfuse	
0470	-F10.1-2	2.000	PC	3AXD50000000246	FUSE 170M4416	630 A;690 V;DIN1 FLUSH END;AR;200KA
0480	-F10.3-4	2.000	PC	3AXD50000000234	FUSE 170M4410	315 A;690 V;DIN1 FLUSH END;AR;200KA
0490		1.000	ST		Cabinetfan	
0500	-F26	1.000	PC	3AFE68264758	PROTECTION SWITCH S 201-K4	4A, 440VAC/60VDC
0510	-G26.1	1.000	PC	3AXD50000000592	FAN R3G225-RH17-23	230V;96W;50HZ;60HZ;0,77A;1080M3S CCC,UL
0520	-G26.2	1.000	PC	3AXD50000000592	FAN R3G225-RH17-23	230V;96W;50HZ;60HZ;0,77A;1080M3S CCC,UL
0530	-K26	1.000	PC	3AUA0000102191	RELAY RCL425024-SOCKET-DIODE	8 A;24 V;24VDC, 2C/O
0540	-X26.1	1.000	PC	3AXD50000000723	TERMINAL BLOCK AS X26 FAN SUPPLY PLUG	12,00 AWG;2,50 mm2;24,00 A;500,00 V
0550	(-X26.1)	1.000	PC	3AXD50000000724	TERMINAL BLOCK AS X26 FAN SUPPLY SOCKET	12,00 AWG;2,50 mm2;24,00 A;500,00 V
0560	-X26.2	1.000	PC	3AXD50000000723	TERMINAL BLOCK AS X26 FAN SUPPLY PLUG	12,00 AWG;2,50 mm2;24,00 A;500,00 V
0570	(-X26.2)	1.000	PC	3AXD50000000724	TERMINAL BLOCK AS X26 FAN SUPPLY SOCKET	12,00 AWG;2,50 mm2;24,00 A;500,00 V
0580		1.000	ST		Auxvoltagedistribution	
0590	-X22	1.000	PC	3AXD50000001632	TERMINAL BLOCK AS X22	12 AWG;2 mm2;24 A;800 V
0600	-X25	1.000	PC	3AXD50000001609	TERMINAL BLOCK AS X25 (1)	6 AWG;10 mm2;57 A;800 V
0610	-X25	1.000	PC	3ABD00609550	ASSEMBLY PLATE FOR X25 TERMINAL	acs880
0620		1.000	ST		EMSTOPterminalblock	
0630	-X25	1.000	PC	3AXD50000001610	TERMINAL BLOCK AS X25 (2)	12 AWG;2 mm2;24 A;500 V
0640		1.000	ST		STOterminalblock	
0650	-X25	1.000	PC	3AXD50000001631	TERMINAL BLOCK AS X60	12 AWG;2 mm2;24 A;500 V
0660		1.000	ST		24vDCdistributionwithUPS	

P345812 / 29711

Cust. Doc. No.	Prep.	Title PART LIST INV2.07 ACS880-107-0078A-3 400V	Item Des. = 2.07 +
Cust. Ref. No.	App.		SAP Doc. No.
Customer WMMP	Project Zhaka Jack-up Lift System Zhaka Jack-up Lift System-1		EPLAN Doc. No. 3ABDC230674 - 2.07
			ABB Ref. No. / Rev. / Sheet Part list_2
			Resp. Dept. / Cont. Part list_3

Part list: 3ABDC230674DU02019

Item	Sort String	Qty.Str	Unit	Component Number	Description and text	Technical data
0670	-F21	1.000	PC	3AFE68264766	PROTECTION SWITCH S 201-K6	S 201-K6
0680		1.000	ST		24VDCsupply	
0690	-WX51	1.000	PC	3AXD50000005214	WIRE HARNESS 24VDC SUPPLY 800MM V2	HALOGEN FREE;X52_X51
0700		1.000	ST		Cabinetrooffansupply	
0710	-WG26	1.000	PC	3AXD50000036922	WIRE HARNESS CABINET ROOF FAN SUPPL	R1I-R4I 800/1000MM
0720		1.000	ST		Cabinetrooffancontrol	
0730	-WX26_1	1.000	PC	3AXD50000005080	WIRE HARNESS 800MM CABINET LOWER RO	HALOGEN FREE;X26.3_X26.4
0740	-WX26_2	1.000	PC	3AXD50000005078	WIRE HARNESS 800MM CABINET UPPER RO	HALOGEN FREE;X26.3_K26
0750		1.000	ST		24VDCdistribution	
0760	-F52.1-5	5.000	PC	3AXD50000005465	FUSE MDL-7-R	7 A;250 V;¼" x 1¼";GLASS TUBE;TIME-DELAY
0770	-T22	1.000	PC	3ABD00010542	POWER SUPPLY NDR-120-24	24V 5A
0780	-X21	1.000	PC	3AXD50000001633	TERMINAL BLOCK AS X21	12 AWG;2 mm2;24 A;800 V
0790	-X52	1.000	PC	3AXD50000005221	TERMINAL BLOCK AS 24VDC X52 TERM BLOCK 5	10 AWG;4 mm2;10 A;500 V;fuse size 6,3x32
0800		1.000	ST		24vDCdistribution	
0810	-T51	1.000	PC	3ABD00010602	POWER SUPPLY NDR-240-24	24V 10A
0820	-T52	1.000	PC	3ABD00010602	POWER SUPPLY NDR-240-24	24V 10A
0830		1.000	ST		Cabinetheaters	
0840	-E95.1-4	4.000	PC	3AFE09827498	HEATING EQUIPMENT SR50	HEATER 50W/220V(110-270VACDC)
0850	(-E95.1-4)	4.000	PC	3AXD50000010133	ASSEMBLY PLATE HEATER	STEEL HDG 1,0;DEGREAS CLEAN
0860	(-E95.1-4)	1.000	PC	3AXD50000010509	ASSEMBLY DRAWING HEATER 50 AND 100W	
0870	X95.1A-4A	4.000	PC	3AXD50000007033	CONNECTOR SC 2,5/ 2	2,50 mm2;24 A;500 V;2-POS. MALE
0880	X95.1B-4B	4.000	PC	3AUA0000066694	CONNECTOR SSL2.5 3043815	LOCKING ELEMENTS FOR ST-COMBI CONNECTOR
0890		1.000	ST		Supplementforrelay	
0900	(-K11)	2.000	PC	3AXD50000021311	CONNECTOR EB 10-DIK RD 2716774	10POLE, 6,15 MM PITCH;FOR DEK RELAYS
0910	(-K11)	1.000	PC	3AXD50000021314	RELAY D-DEK_1,5_GN	end plate

P345812 / 29711

Cust. Doc. No.	Prep.	Title PART LIST INV2.07 ACS880-107-0078A-3 400V	Item Des. = 2.07 +
Cust. Ref. No.	App.		SAP Doc. No.
Customer WMMP	Project Zhaka Jack-up Lift System Zhaka Jack-up Lift System-1		EPLAN Doc. No. 3ABDC230674 - 2.07
			ABB Ref. No. / Rev. / Sheet Part list_3
			Resp. Dept. / Cont. &EMA/1

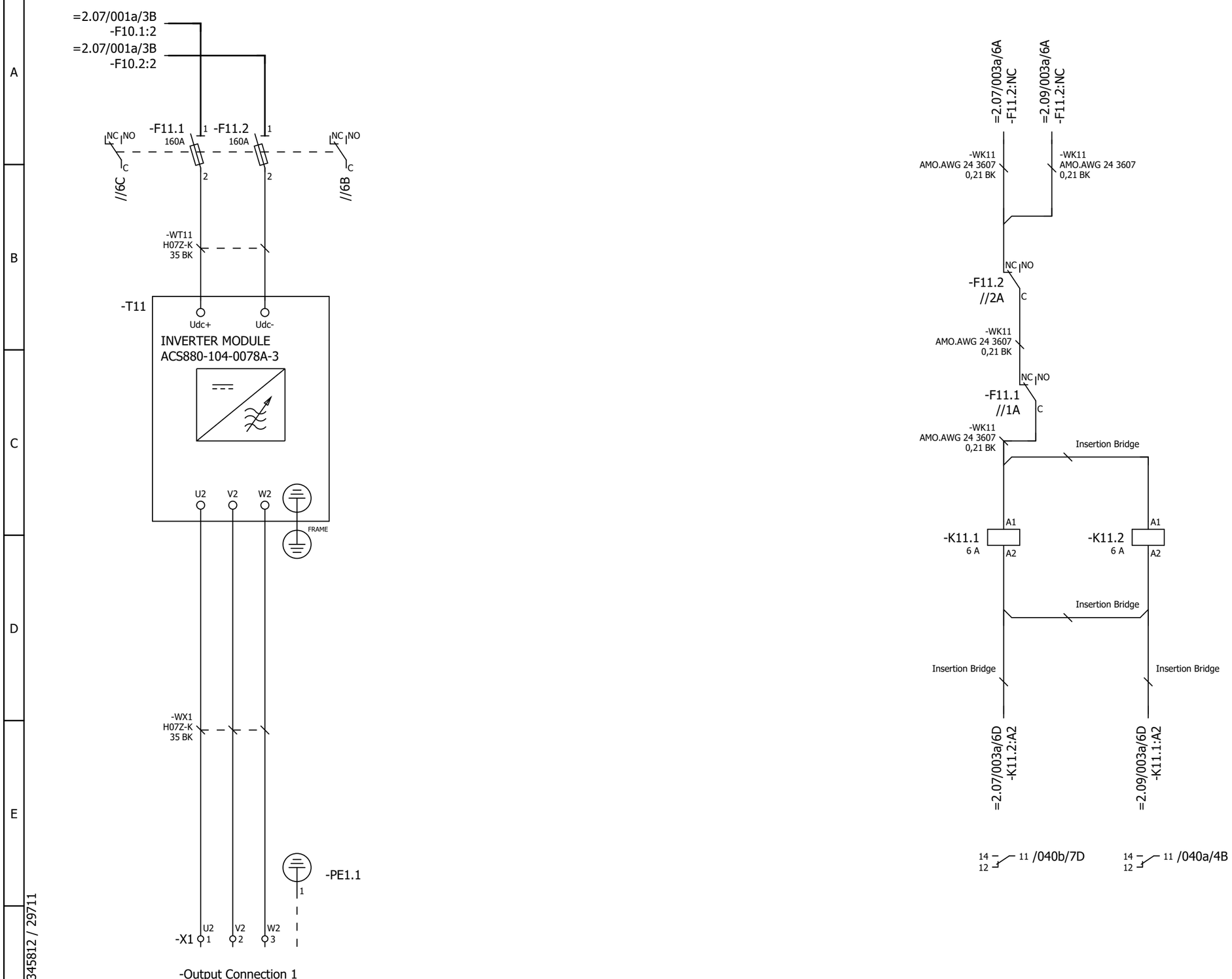

P345812 / 29711

Cust. Doc. No.	Prep. Sky-Xin Zhang 02.08.2023	Title MAIN CIRCUIT	Circuit diagram EFS2
Cust. Ref. No.	App.	INV2.08	SAP Doc. No.
Customer WMMP	Project Zhaka Jack-up Lift System	ACS880-107-0078A-3	EPLAN Doc. No. 3ABDC230674 - 2.08
	Zhaka Jack-up Lift System-1	400V	ABB Ref. No.
			Resp. Dept.

Item Des.
= 2.08
+ 2.07.1

Rev. .1 Sheet 003a
Cont. 040a

Control and status signals	Terminal	Pin
E-STOP FEEDBACK 1 - ESTOP ACTIVE	-XRO1	12
RUNNING 1 - RUNNING	-XRO2	22
FAULT (-1) 1 - NO FAULT	-XRO3	32

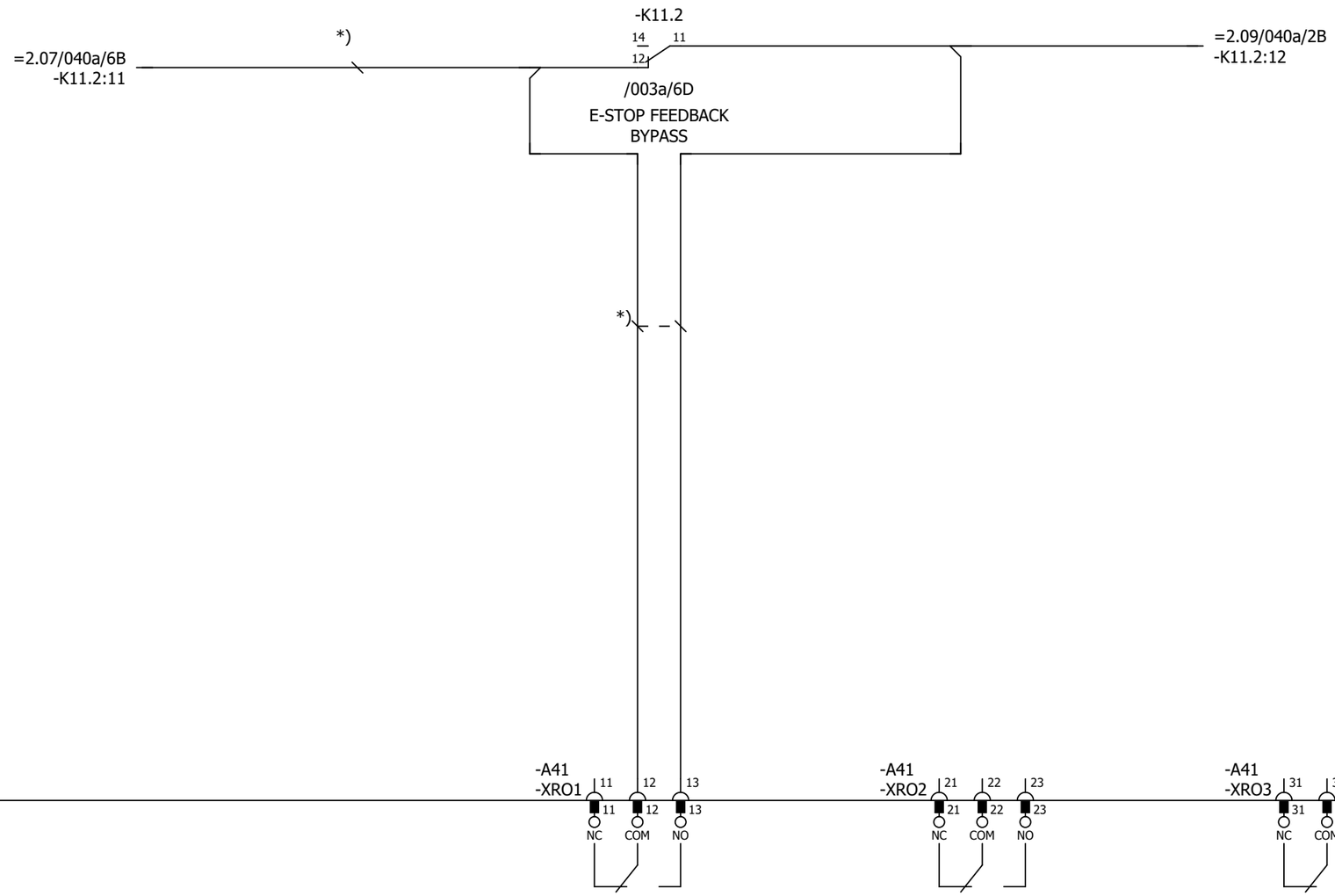

P345812 / 29711

Cust. Doc. No.	Prep. Sky-Xin Zhang 02.08.2023	Title CONTROL BOARD INV2.08 ACS880-107-0078A-3 400V	Circuit diagram EFS2
Cust. Ref. No.	App.		SAP Doc. No.
Customer WMMP	Project Zhaka Jack-up Lift System Zhaka Jack-up Lift System-1		EPLAN Doc. No. 3ABDC230674 - 2.08
			ABB Ref. No.
			Resp. Dept.

Item Des.
= 2.08
+ 2.07.1

Rev. .1 Sheet 040a
Cont. 040b

Control and status signals	Terminal	Pin
DIGITAL INTERLOCK	-XD24	1
START/STOP 1 - START	-XDI	1
FORWARD/REVERSE 1 - REVERSE	-XDI	2
RESET	-XDI	3
EMERGENCY STOP 0 - ACTIVE	-XDI	4
NOT SPECIFIED	-XDI	5
DI6 NOT IN USE	-XDI	6
OUTPUT: READY	-XDIO	1
OUTPUT: RUNNING	-XDIO	2

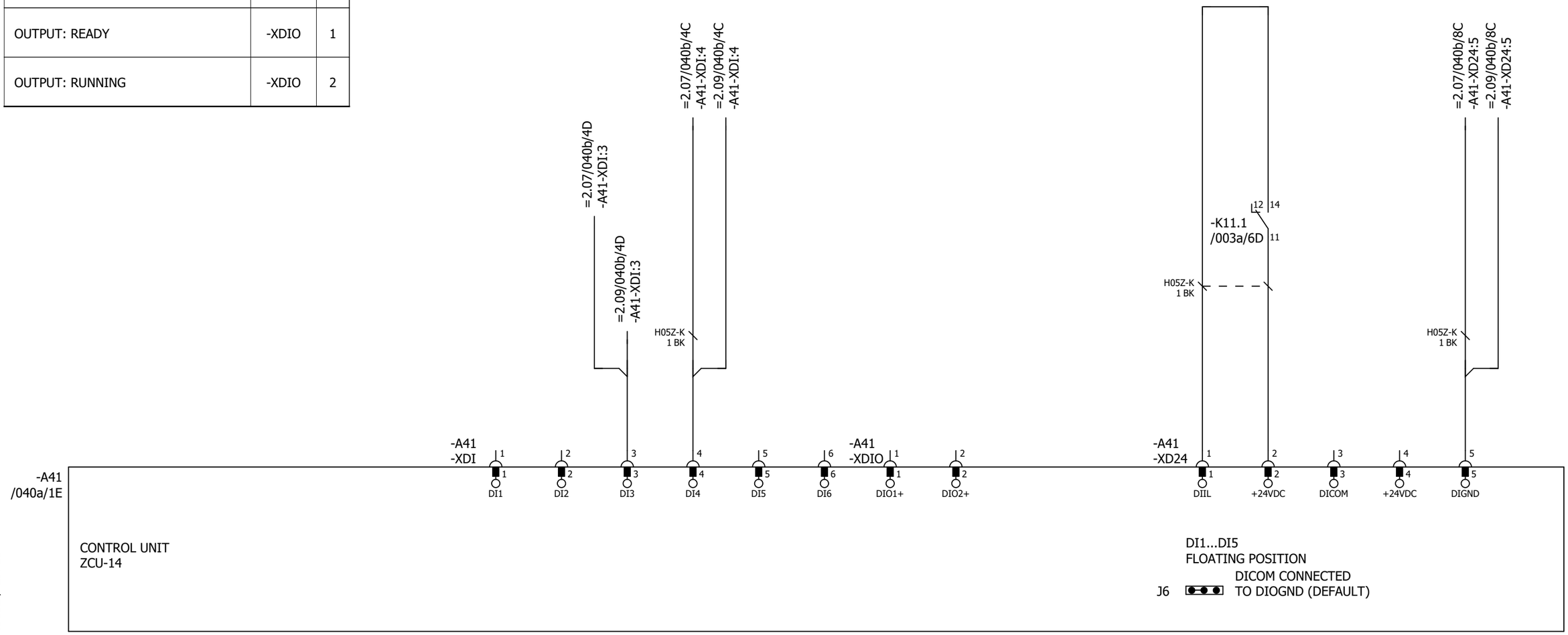

P345812 / 29711

Cust. Doc. No.	Prep. Sky-Xin Zhang 02.08.2023	Title CONTROL BOARD INV2.08 ACS880-107-0078A-3 400V	Circuit diagram EFS2	Item Des.	
Cust. Ref. No.	App.		SAP Doc. No.	= 2.08 + 2.07.1	
Customer WMMP	Project Zhaka Jack-up Lift System Zhaka Jack-up Lift System-1	ABB	EPLAN Doc. No. 3ABDC230674 - 2.08		
			ABB Ref. No.	Rev. .1	Sheet 040b
			Resp. Dept.	Cont.	040c

Control and status signals	Terminal	Pin
MOTOR TEMP. MONITORING 0(2)…10V	-XAI	4
AI2 NOT SPECIFIED BY DEFAULT NOT IN USE 0(4)…20mA	-XAI	6
CURR SOU MOT TEMP MONIT 0(4)...20mA	-XAO	1
CURRENT 0(4)…20mA ↔ 0(4)…MOTOR CURRENT	-XAO	3

P345812 / 29711

Cust. Doc. No.	Prep. Sky-Xin Zhang 02.08.2023	Title CONTROL BOARD INV2.08 ACS880-107-0078A-3 400V	Circuit diagram EFS2
Cust. Ref. No.	App.		SAP Doc. No.
Customer WMMP	Project Zhaka Jack-up Lift System Zhaka Jack-up Lift System-1		EPLAN Doc. No. 3ABDC230674 - 2.08
			ABB Ref. No.
			Resp. Dept.

Item Des.
= 2.08
+ 2.07.1

Rev. .1 Sheet 040c
Cont. 040d

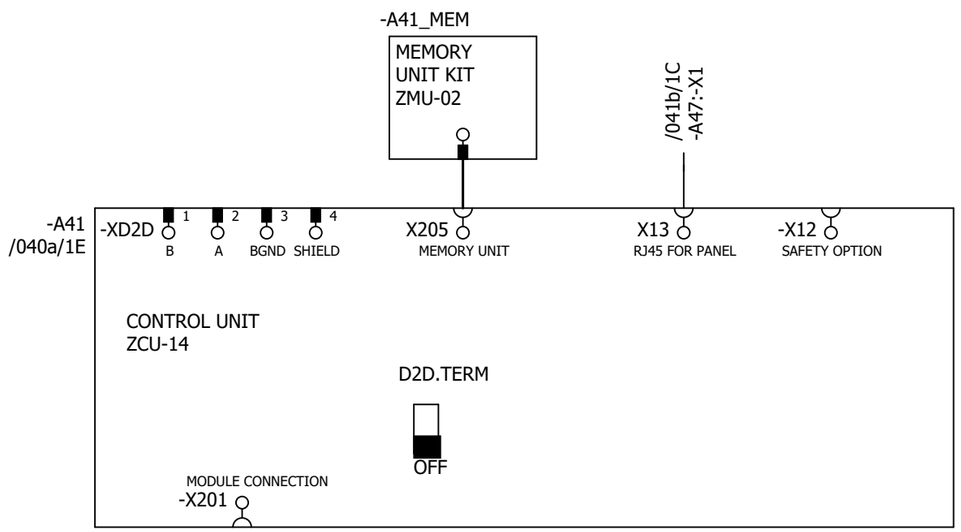

P345812 / 29711

Cust. Doc. No.	Prep. Sky-Xin Zhang 02.08.2023	Title CONTROL BOARD INV2.08 ACS880-107-0078A-3 400V	Circuit diagram EFS2
Cust. Ref. No.	App.		SAP Doc. No.
Customer WMMP	Project Zhaka Jack-up Lift System Zhaka Jack-up Lift System-1		EPLAN Doc. No. 3ABDC230674 - 2.08
			ABB Ref. No.
			Resp. Dept.

Item Des.	= 2.08 + 2.07.1
Rev. .1	Sheet 040d
Cont.	041a

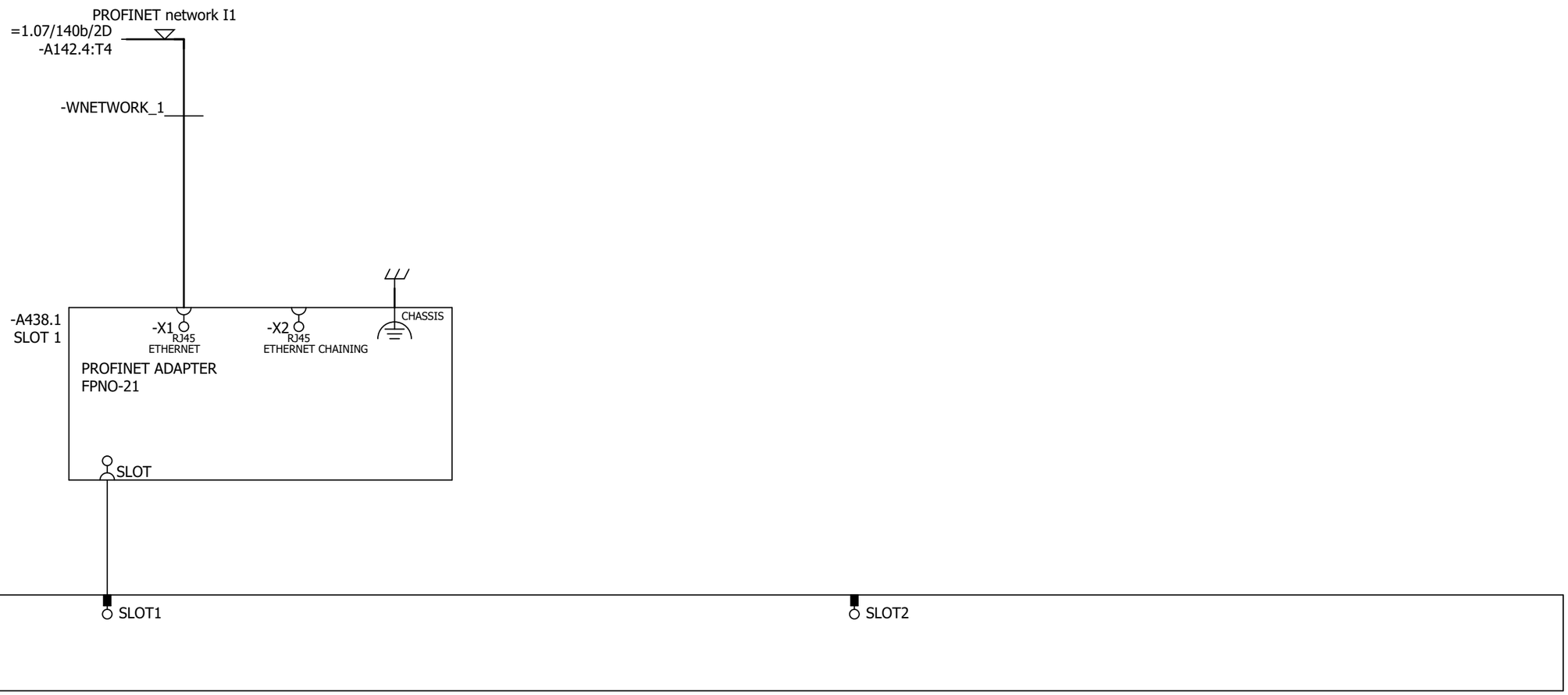

P345812 / 29711

Cust. Doc. No.	Prep. Sky-Xin Zhang 02.08.2023	Title OPTION CARDS	Circuit diagram EFS2	Item Des.	
Cust. Ref. No.	App.	INV2.08	SAP Doc. No.	= 2.08	
Customer WMMP	Project Zhaka Jack-up Lift System	ACS880-107-0078A-3	EPLAN Doc. No. 3ABDC230674 - 2.08	+ 2.07.1	
	Zhaka Jack-up Lift System-1	400V	ABB Ref. No.	Rev. .1	Sheet 041a
			Resp. Dept.	Cont.	041b

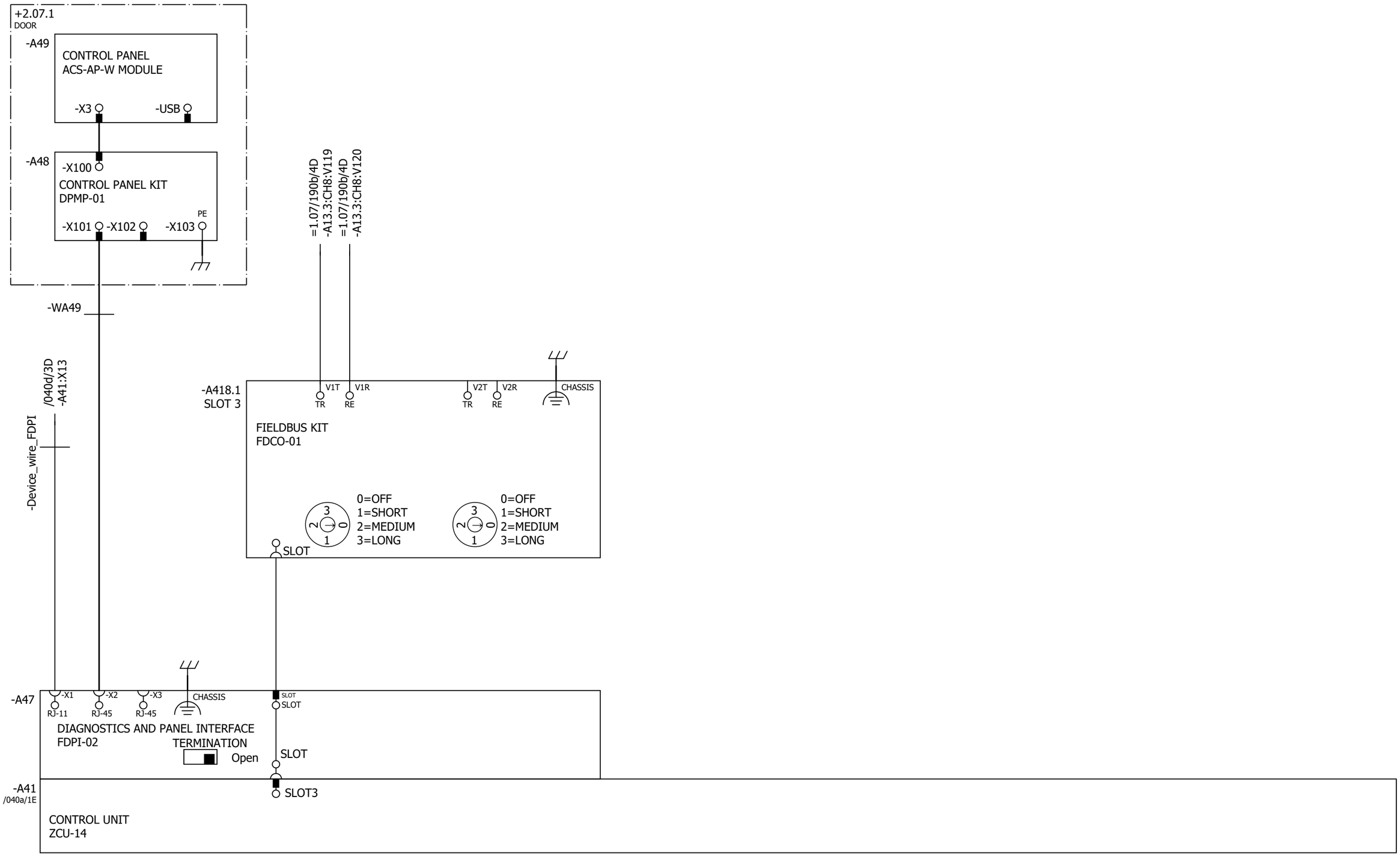

Cust. Doc. No.	Prep. Sky-Xin Zhang 02.08.2023	Title OPTION CARDS	Circuit diagram EFS2	Item Des.
Cust. Ref. No.	App.	INV2.08	SAP Doc. No.	= 2.08
Customer WMMP	Project Zhaka Jack-up Lift System	ACS880-107-0078A-3	EPLAN Doc. No. 3ABDC230674 - 2.08	+ 2.07.1
	Zhaka Jack-up Lift System-1	400V	ABB Ref. No.	Rev. .1 Sheet 041b
			Resp. Dept.	Cont. 061a

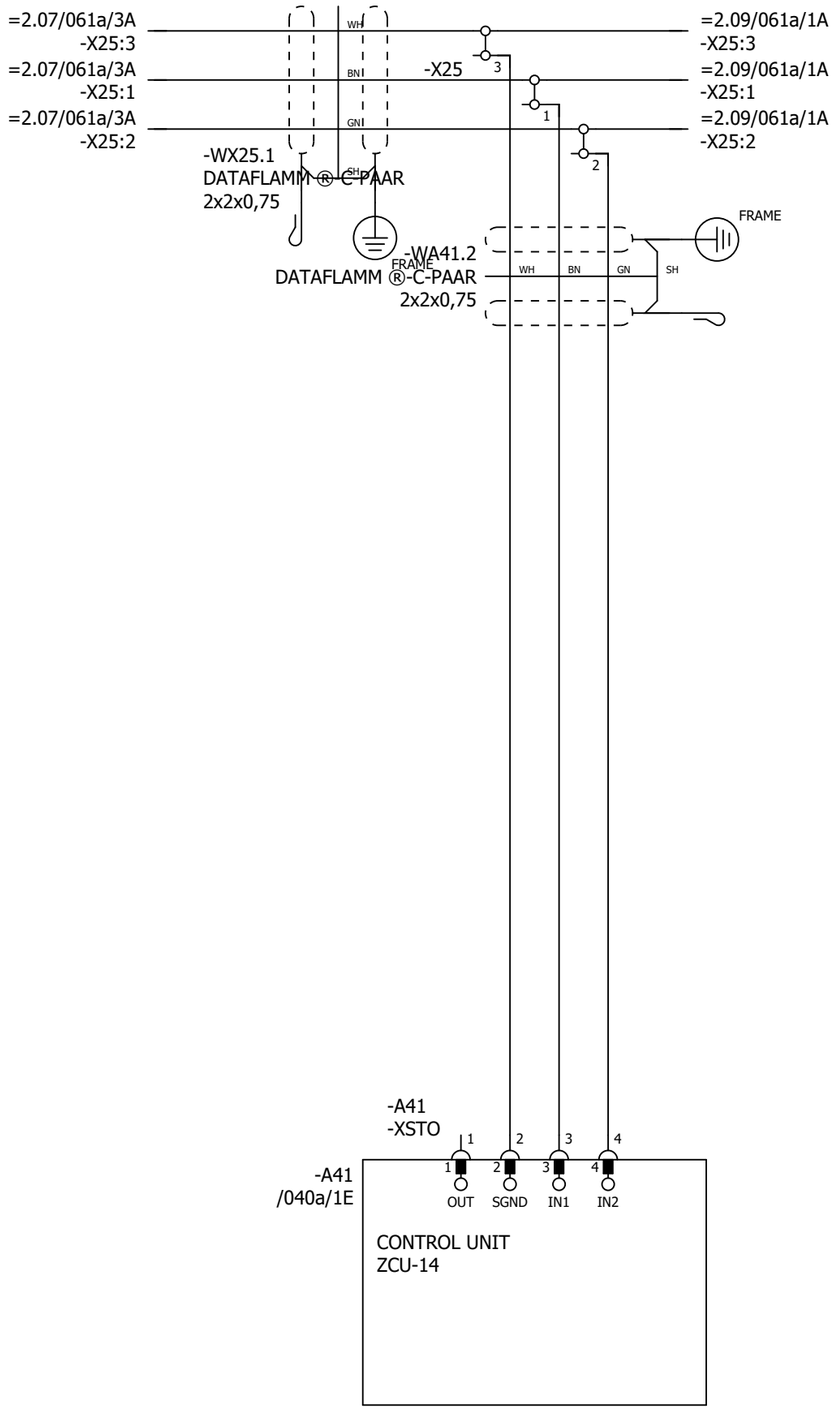

P345812 / 29711

SAFETY CIRCUIT
MACRO REVISION 6
RULES CONVERTED 19.7.2023

Cust. Doc. No.	Prep. Sky-Xin Zhang 02.08.2023	Title SAFETY CIRCUIT INV2.08 ACS880-107-0078A-3 400V	Circuit diagram EFS2
Cust. Ref. No.	App.		SAP Doc. No.
Customer WMMP	Project Zhaka Jack-up Lift System Zhaka Jack-up Lift System-1		EPLAN Doc. No. 3ABDC230674 - 2.08
			ABB Ref. No.
			Resp. Dept.

Item Des.
= 2.08
+ 2.07.1

Rev. .1 Sheet 061a

Cont. &MPC/Part list_1

Part list: 3ABDC230674DU02020

Item	Sort String	Qty.Str	Unit	Component Number	Description and text	Technical data
0010		1.000	ST		ACS880-107-0078A-3+A012+B053+C121+C132+	
0020		1.000	ST		_C206+E210+F272+F287+F288+G300+G307+G315	
0030		1.000	ST		_+G320+G330+G344+H352+H367+J400+K492+K49	
0040		1.000	ST		_3+L503+P913+Q964	
0050		1.000	ST		=2.08	
0060		1.000	ST		+2.07.1,INU3	
0070		1.000	ST		Powerconversionequipment	
0080	-A41_MEM	1.000	PC	3AXD50000006010	MEMORY UNIT KIT ZMU-02	
0090	-T11	1.000	PC	3AUA0000120009-M	ACS880-104-0078A-3+P922	+P922
0100	SCREW	1.000	PC	3AFE68681481	SCREW K30X10 TORX	PT WN1452 ZN
0110	SOFTWARE	1.000	PC	3AUA0000153462	SOFTWARE PRIMARY CONTROL PROGRA	AINF6 FOR ZCU-12/14
0120		1.000	ST		R4imoduleDCfuse	
0130	-F11.1-2	2.000	PC	3AXD50000000219	FUSE FR27UQ69V160T/160A	6.921 CP URQ 27X60MM FERRULE;AR
0140		1.000	ST		R3i-R4imoduleDCfusebase	
0150	(-F11.1-2)	2.000	PC	3AUA0000089227	FUSE HOLDER FUSE BASE US271MI 150A	FUSE BASE US271MI 150A 800V
0160		1.000	ST		motorterminalR4i,coppercable	
0170	-X1	1.000	PC	3ABD50000000270	CONNECTOR PPAC-50	50 MM2;150 A;800V
0180	-X1	1.000	PC	3ABD50000000270	CONNECTOR PPAC-50	50 MM2;150 A;800V
0190	-X1	1.000	PC	3ABD50000000270	CONNECTOR PPAC-50	50 MM2;150 A;800V
0200		1.000	ST		24VDCsupplyZCU	
0210	-WA41_1	1.000	PC	3AXD50000005218	WIRE HARNESS 24VDC SUPPLY X51 ZCU V	HALOGEN FREE;X51_A51
0220		1.000	ST		Rooffancontrol	
0230	-WA41_3	1.000	PC	3AXD50000002688	WIRE HARNESS FAN CONTROL MAIN WIRE	HALOGEN FREE;X208_X26.3
0240		1.000	ST		Toprowmodulewireharness	
0250	-WT11	1.000	PC	3AXD50000002256	WIRE HARNESS R4I FUSE_MODULE V2	HALOGEN FREE;MAIN CIRCUIT WIRE SET
0260	-WX1	1.000	PC	3AXD50000002258	WIRE HARNESS R4I MODULE_OUTPUT TR V	HALOGEN FREE;MAIN CIRCUIT WIRE SET
0270		1.000	ST		Optionmodule	
0280	-A418.1	1.000	PC	3AUA0000107392	COMMUNIC. ADAPTER FDCO-01	
0290		1.000	ST		Controlpanel	
0300	-A47	1.000	PC	3AUA0000108650	FIELDBUS KIT FDPI-02	PANEL BUS ADAPTER
0310	-A48	1.000	PC	3AUA0000108878	CONTROL PANEL KIT DPMP-01	DPMP-01
0320	-A49	1.000	PC	3AXD50000025964	CONTROL PANEL ACS-AP-W MODULE	ASSISTANT PANEL WIRELESS CPU1
0330		1.000	ST		DCfusesupervision	

P345812 / 29711

Cust. Doc. No.	Prep.	Title PART LIST INV2.08 ACS880-107-0078A-3 400V	Item Des. = 2.08 +
Cust. Ref. No.	App.		SAP Doc. No.
Customer WMMP	Project Zhaka Jack-up Lift System Zhaka Jack-up Lift System-1		EPLAN Doc. No. 3ABDC230674 - 2.08
			ABB Ref. No. / Rev. / Sheet Part list_1
			Resp. Dept. / Cont. Part list_2

Part list: 3ABDC230674DU02020

Item	Sort String	Qty.Str	Unit	Component Number	Description and text	Technical data
0340	-K11.1-2	2.000	PC	3AXD50000021313	RELAY DEK_REL_G24/21	250 V;6 A;COIL 24VDC
0350		1.000	ST		Profinetswitch	
0360		1.000	ST		FieldBus	
0370	-A438.1	1.000	PC	3AXD50000192779	OPTION MODULE FPNO-21	PROFINET IO
0380		1.000	ST		Supplementtorelay	
0390	(-K11.1)	1.000	PC	3AXD50000021312	TERMINAL BLOCK ST EB2_DIK_RD 2716693	2POLE, 6,15 MM PITCH;FOR DEK RELAYS

P345812 / 29711

Cust. Doc. No.	Prep.	Title PART LIST INV2.08 ACS880-107-0078A-3 400V	Item Des. = 2.08 +
Cust. Ref. No.	App.		SAP Doc. No.
Customer WMMP	Project Zhaka Jack-up Lift System Zhaka Jack-up Lift System-1		EPLAN Doc. No. 3ABDC230674 - 2.08
			ABB Ref. No. / Rev. / Sheet Part list_2
			Resp. Dept. / Cont. &EMA/1

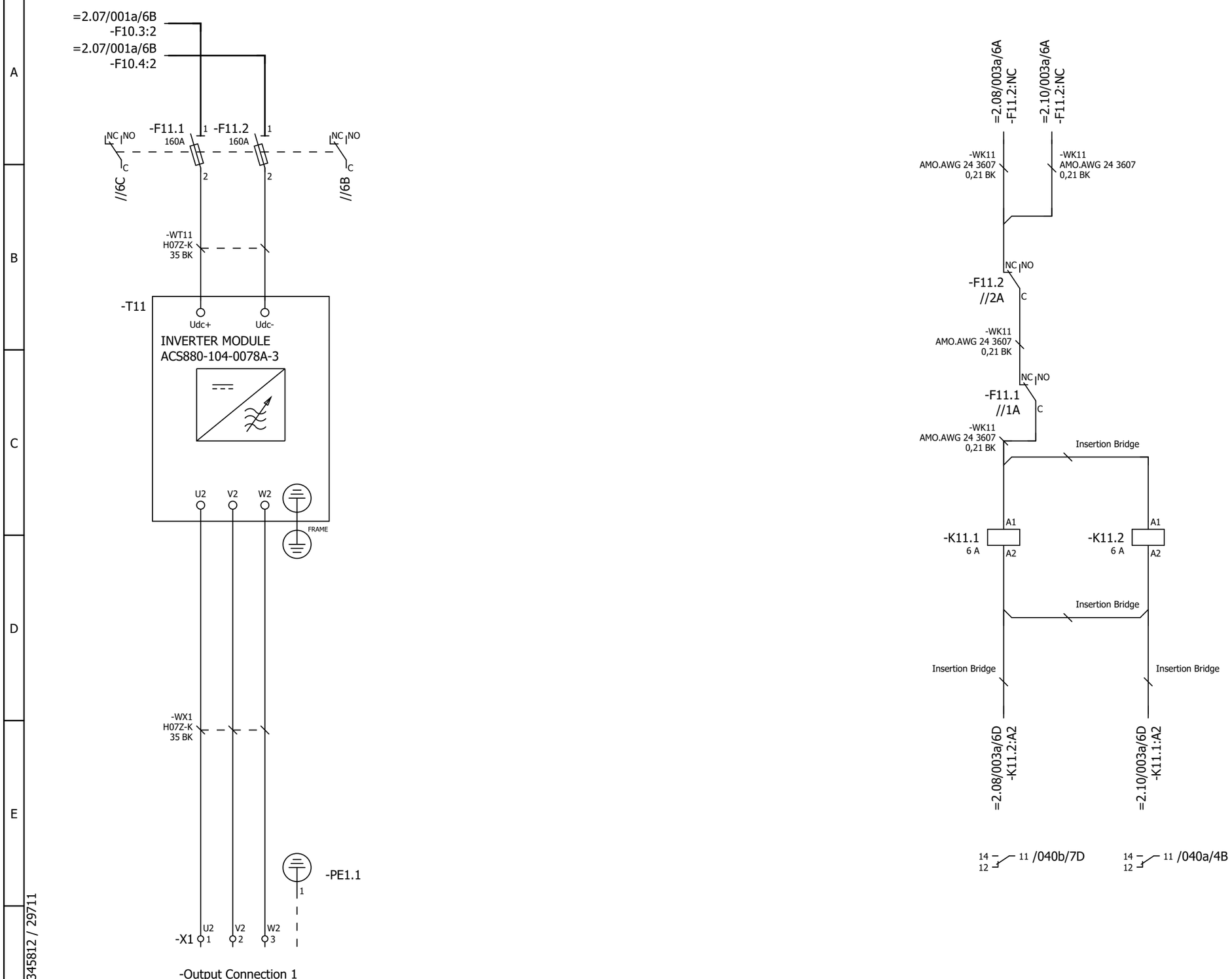

P345812 / 29711

Cust. Doc. No.	Prep. Sky-Xin Zhang 02.08.2023	Title MAIN CIRCUIT	Circuit diagram EFS2
Cust. Ref. No.	App.	INV2.09	SAP Doc. No.
Customer WMMP	Project Zhaka Jack-up Lift System	ACS880-107-0078A-3	EPLAN Doc. No. 3ABDC230674 - 2.09
	Zhaka Jack-up Lift System-1	400V	ABB Ref. No.
			Resp. Dept.

Item Des.
= 2.09
+ 2.07.1

Rev. .1 Sheet 003a
Cont. 040a

Control and status signals	Terminal	Pin
E-STOP FEEDBACK 1 - ESTOP ACTIVE	-XRO1	12
RUNNING 1 - RUNNING	-XRO2	22
FAULT (-1) 1 - NO FAULT	-XRO3	32

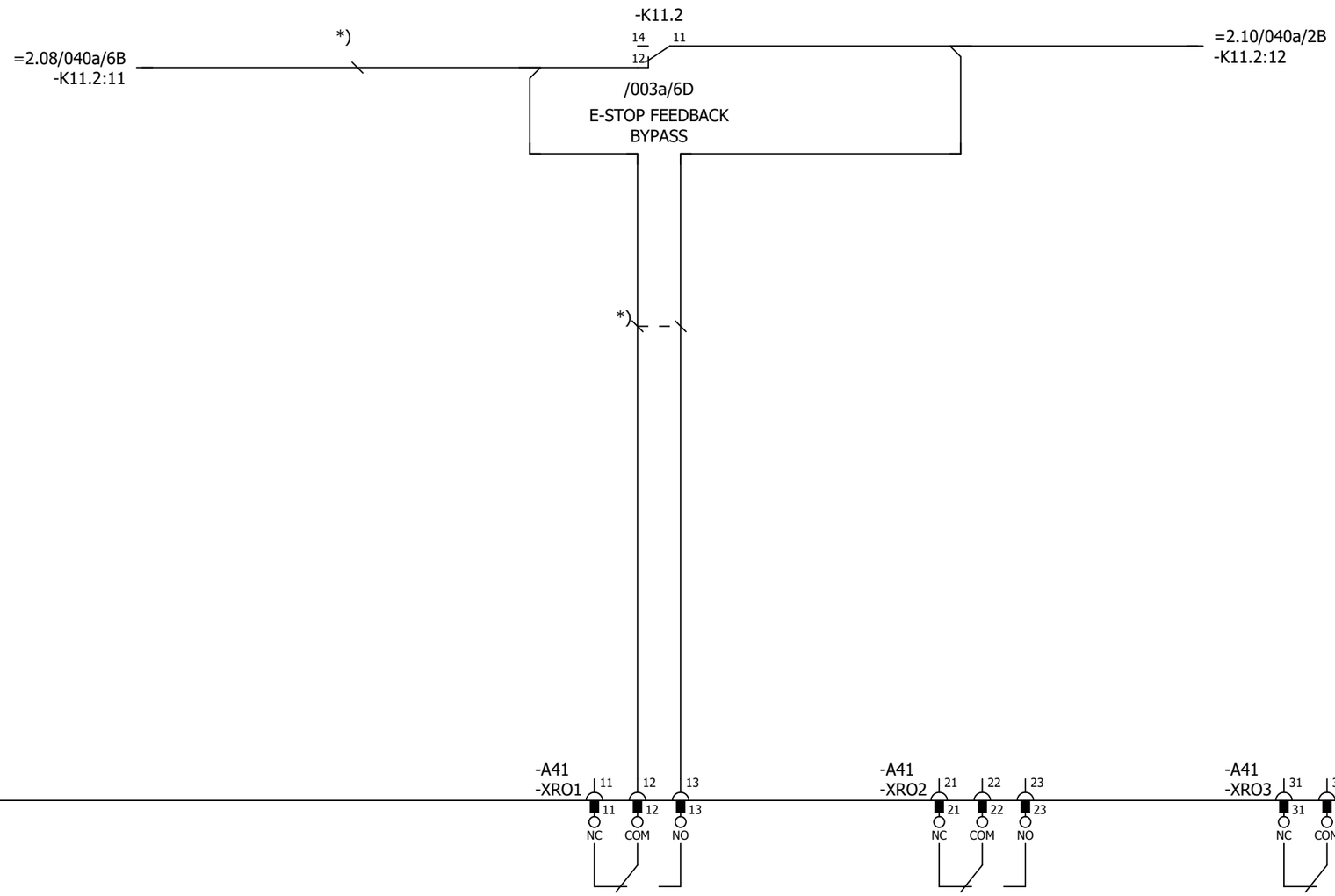

P345812 / 29711

Cust. Doc. No.	Prep. Sky-Xin Zhang 02.08.2023	Title CONTROL BOARD INV2.09 ACS880-107-0078A-3 400V	Circuit diagram EFS2
Cust. Ref. No.	App.		SAP Doc. No.
Customer WMMP	Project Zhaka Jack-up Lift System Zhaka Jack-up Lift System-1		EPLAN Doc. No. 3ABDC230674 - 2.09
			ABB Ref. No.
			Resp. Dept.

Item Des.
= 2.09
+ 2.07.1

Rev. .1 Sheet 040a
Cont. 040b

Control and status signals	Terminal	Pin
DIGITAL INTERLOCK	-XD24	1
START/STOP 1 - START	-XDI	1
FORWARD/REVERSE 1 - REVERSE	-XDI	2
RESET	-XDI	3
EMERGENCY STOP 0 - ACTIVE	-XDI	4
NOT SPECIFIED	-XDI	5
DI6 NOT IN USE	-XDI	6
OUTPUT: READY	-XDIO	1
OUTPUT: RUNNING	-XDIO	2

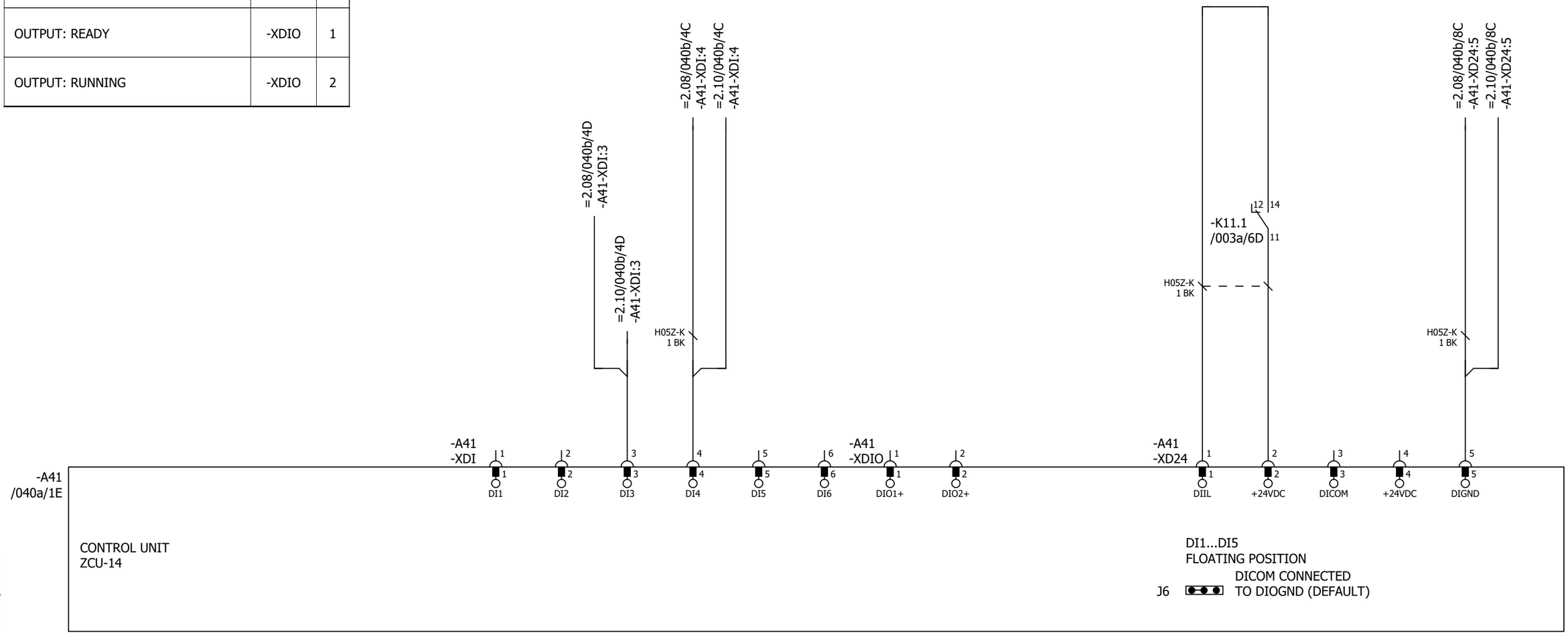

P345812 / 29711

Cust. Doc. No.	Prep. Sky-Xin Zhang 02.08.2023	Title CONTROL BOARD INV2.09 ACS880-107-0078A-3 400V	Circuit diagram EFS2
Cust. Ref. No.	App.		SAP Doc. No.
Customer WMMP	Project Zhaka Jack-up Lift System Zhaka Jack-up Lift System-1		EPLAN Doc. No. 3ABDC230674 - 2.09
			ABB Ref. No.
			Resp. Dept.

Item Des.
= 2.09
+ 2.07.1

Rev. .1 Sheet 040b
Cont. 040c

Control and status signals	Terminal	Pin
MOTOR TEMP. MONITORING 0(2)…10V	-XAI	4
AI2 NOT SPECIFIED BY DEFAULT NOT IN USE 0(4)…20mA	-XAI	6
CURR SOU MOT TEMP MONIT 0(4)...20mA	-XAO	1
CURRENT 0(4)…20mA ↔ 0(4)…MOTOR CURRENT	-XAO	3

P345812 / 29711

Cust. Doc. No.	Prep. Sky-Xin Zhang 02.08.2023	Title CONTROL BOARD INV2.09 ACS880-107-0078A-3 400V	Circuit diagram EFS2
Cust. Ref. No.	App.		SAP Doc. No.
Customer WMMP	Project Zhaka Jack-up Lift System Zhaka Jack-up Lift System-1		EPLAN Doc. No. 3ABDC230674 - 2.09
			ABB Ref. No.
			Resp. Dept.

Item Des.
= 2.09
+ 2.07.1

Rev. .1 Sheet 040c
Cont. 040d

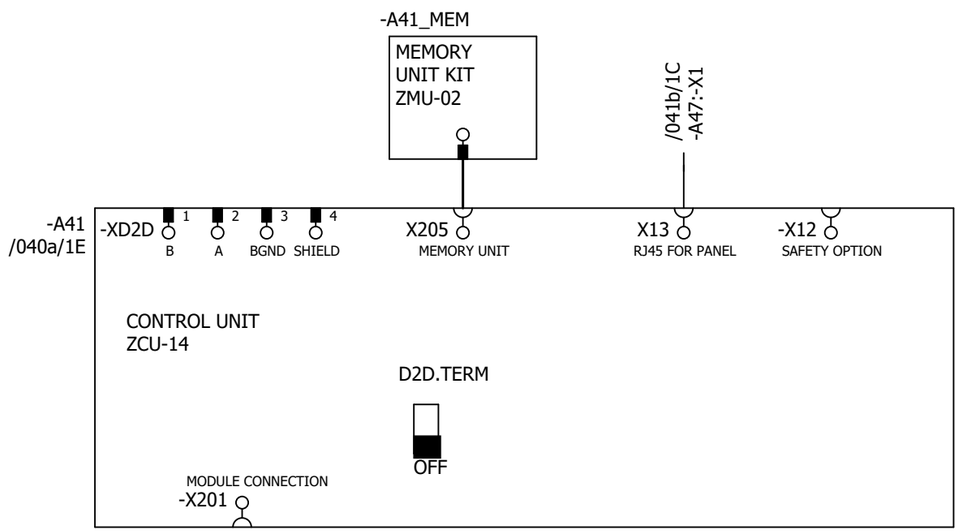

P345812 / 29711

Cust. Doc. No.	Prep. Sky-Xin Zhang 02.08.2023	Title CONTROL BOARD	Circuit diagram EFS2
Cust. Ref. No.	App.	INV2.09	SAP Doc. No.
Customer WMMP	Project Zhaka Jack-up Lift System	ACS880-107-0078A-3	EPLAN Doc. No. 3ABDC230674 - 2.09
	Zhaka Jack-up Lift System-1	400V	ABB Ref. No.
			Resp. Dept.

Item Des. = 2.09 + 2.07.1

Rev. .1 Sheet 040d

Cont. 041a

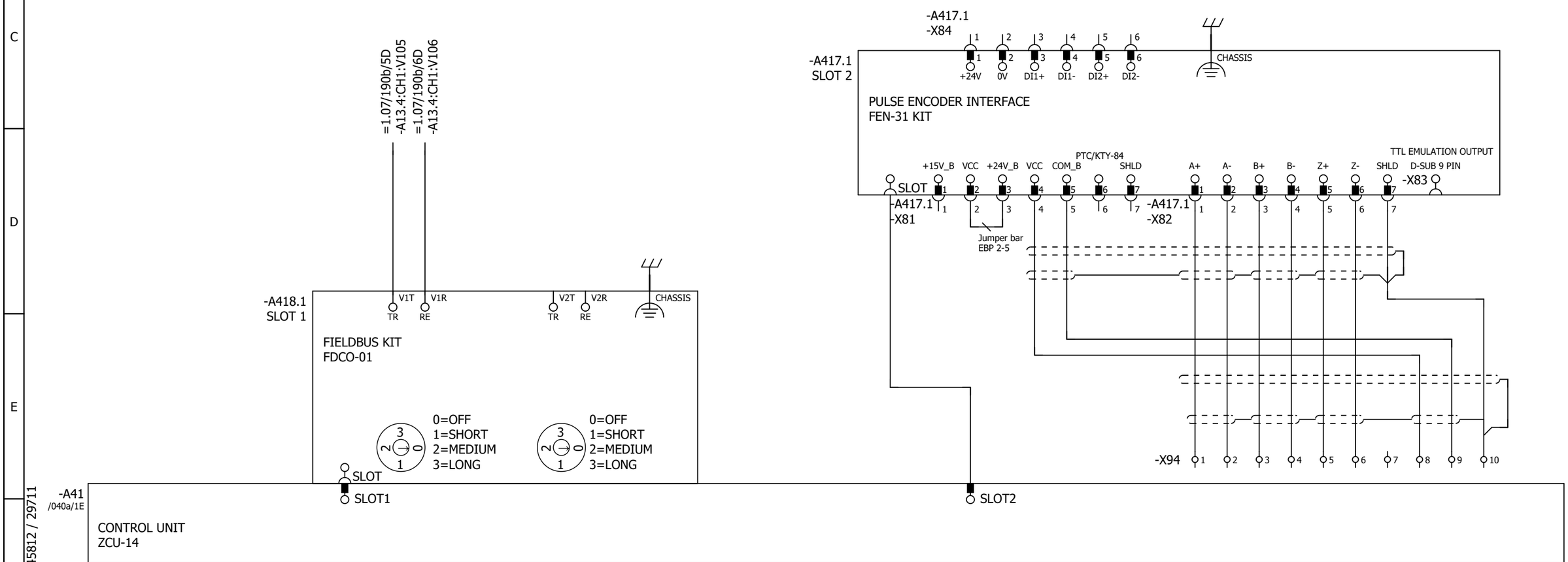

Cust. Doc. No.	Prep. Sky-Xin Zhang 02.08.2023	Title OPTION CARDS	Circuit diagram EFS2	Item Des.	
Cust. Ref. No.	App.	INV2.09	SAP Doc. No.	= 2.09	
Customer WMMP	Project Zhaka Jack-up Lift System	ACS880-107-0078A-3	EPLAN Doc. No. 3ABDC230674 - 2.09	+ 2.07.1	
	Zhaka Jack-up Lift System-1	400V	ABB Ref. No.	Rev. .1	Sheet 041a
			Resp. Dept.	Cont.	041b

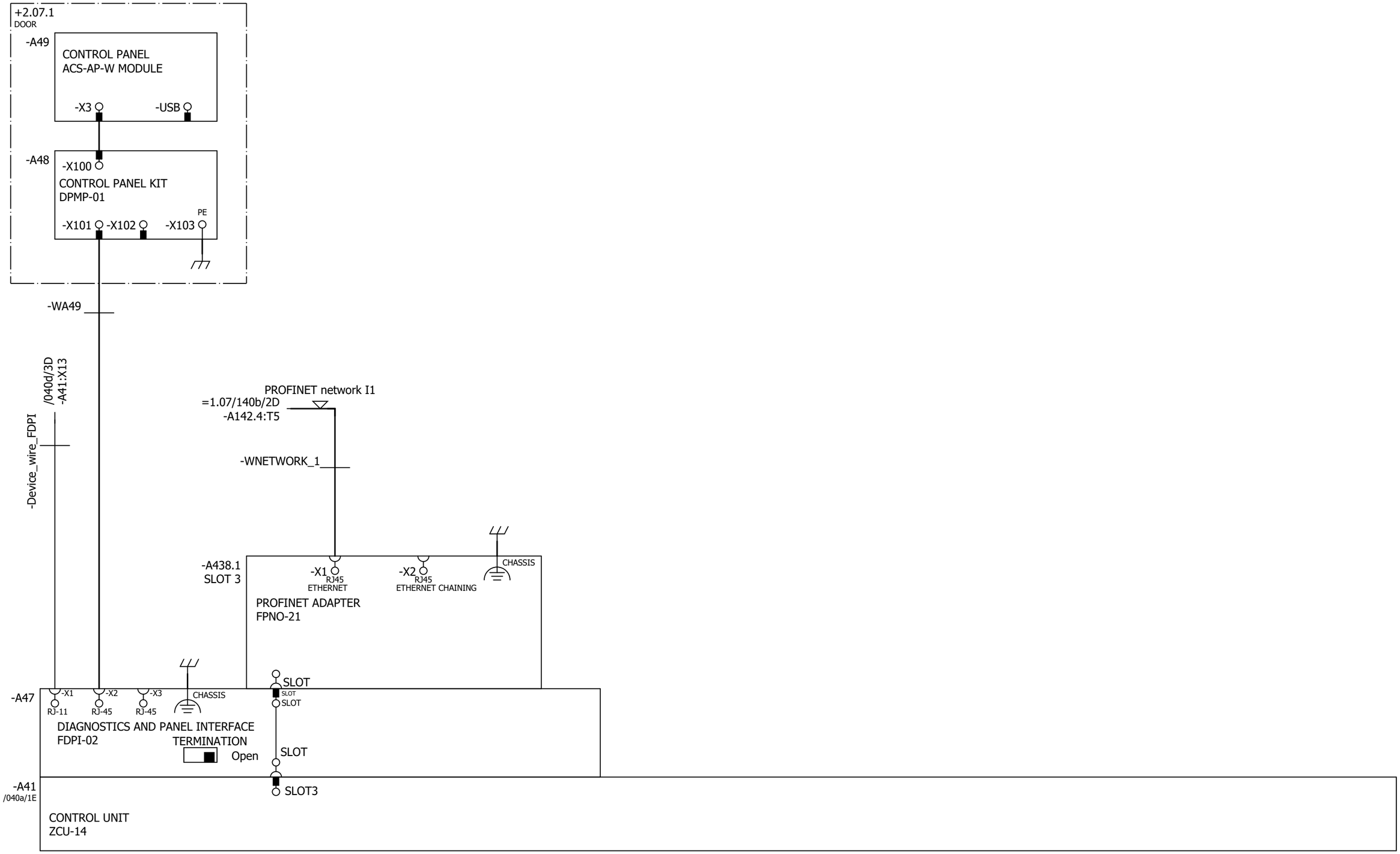

Cust. Doc. No.	Prep. Sky-Xin Zhang 02.08.2023	Title OPTION CARDS	Circuit diagram EFS2	Item Des.	
Cust. Ref. No.	App.	INV2.09	SAP Doc. No.	= 2.09	
Customer WMMP	Project Zhaka Jack-up Lift System	ACS880-107-0078A-3	EPLAN Doc. No. 3ABDC230674 - 2.09	+ 2.07.1	
		400V	ABB Ref. No.	Rev. .1	Sheet 041b
	Zhaka Jack-up Lift System-1		Resp. Dept.	Cont.	061a

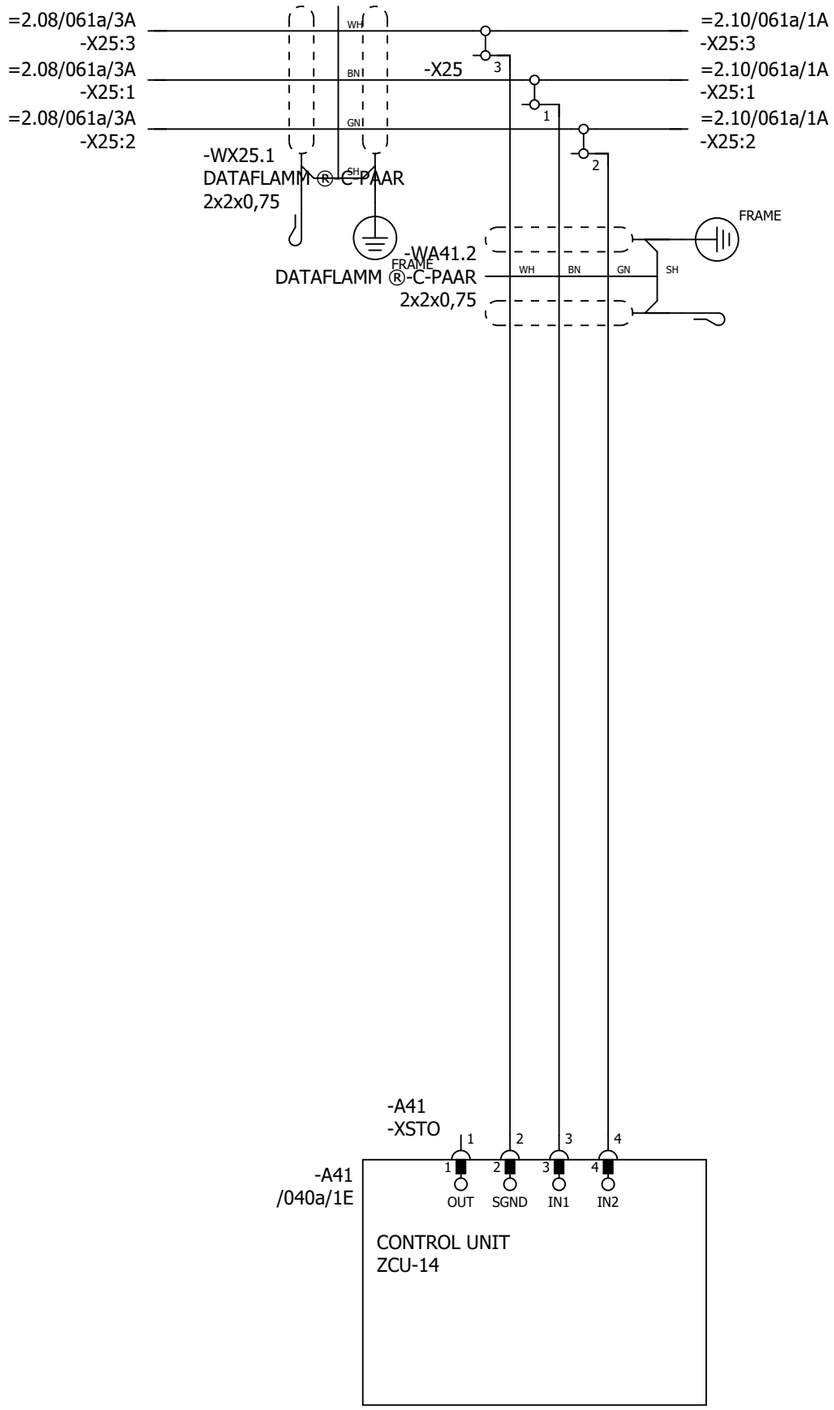

P345812 / 29711

SAFETY CIRCUIT
MACRO REVISION 6
RULES CONVERTED 19.7.2023

Cust. Doc. No.	Prep. Sky-Xin Zhang 02.08.2023	Title SAFETY CIRCUIT	Circuit diagram EFS2
Cust. Ref. No.	App.	INV2.09	SAP Doc. No.
Customer WMMP	Project Zhaka Jack-up Lift System	ACS880-107-0078A-3	EPLAN Doc. No. 3ABDC230674 - 2.09
	Zhaka Jack-up Lift System-1	400V	ABB Ref. No.
			Resp. Dept.

Item Des.
= 2.09
+ 2.07.1

Rev. .1 Sheet 061a

Cont. &MPC/Part list_1

Part list: 3ABDC230674DU02021

Item	Sort String	Qty.Str	Unit	Component Number	Description and text	Technical data
0010		1.000	ST		ACS880-107-0078A-3+A012+B053+C121+C132+	
0020		1.000	ST		_C206+E210+F272+F287+F288+G300+G307+G315	
0030		1.000	ST		_+G320+G330+G344+H352+H367+J400+K492+L50	
0040		1.000	ST		_2+L503+P913+Q964	
0050		1.000	ST		=2.09	
0060		1.000	ST		+2.07.1,INU3	
0070		1.000	ST		Powerconversionequipment	
0080	-A41_MEM	1.000	PC	3AXD50000006010	MEMORY UNIT KIT ZMU-02	
0090	-T11	1.000	PC	3AUA0000120009-M	ACS880-104-0078A-3+P922	+P922
0100	SCREW	1.000	PC	3AFE68681481	SCREW K30X10 TORX	PT WN1452 ZN
0110	SOFTWARE	1.000	PC	3AUA0000153462	SOFTWARE PRIMARY CONTROL PROGRA	AINF6 FOR ZCU-12/14
0120		1.000	ST		R4imoduleDCfuse	
0130	-F11.1-2	2.000	PC	3AXD50000000219	FUSE FR27UQ69V160T/160A	6.921 CP URQ 27X60MM FERRULE;AR
0140		1.000	ST		R3i-R4imoduleDCfusebase	
0150	(-F11.1-2)	2.000	PC	3AUA0000089227	FUSE HOLDER FUSE BASE US271MI 150A	FUSE BASE US271MI 150A 800V
0160		1.000	ST		motorterminalR4i,coppercable	
0170	-X1	1.000	PC	3ABD50000000270	CONNECTOR PPAC-50	50 MM2;150 A;800V
0180	-X1	1.000	PC	3ABD50000000270	CONNECTOR PPAC-50	50 MM2;150 A;800V
0190	-X1	1.000	PC	3ABD50000000270	CONNECTOR PPAC-50	50 MM2;150 A;800V
0200		1.000	ST		24VDCsupplyZCU	
0210	-WA41_1	1.000	PC	3AXD50000005218	WIRE HARNESS 24VDC SUPPLY X51 ZCU V	HALOGEN FREE;X51_A51
0220		1.000	ST		Rooffancontrol	
0230	-WA41_3	1.000	PC	3AXD50000002688	WIRE HARNESS FAN CONTROL MAIN WIRE	HALOGEN FREE;X208_X26.3
0240		1.000	ST		Toprowmodulewireharness	
0250	-WT11	1.000	PC	3AXD50000002256	WIRE HARNESS R4I FUSE_MODULE V2	HALOGEN FREE;MAIN CIRCUIT WIRE SET
0260	-WX1	1.000	PC	3AXD50000002258	WIRE HARNESS R4I MODULE_OUTPUT TR V	HALOGEN FREE;MAIN CIRCUIT WIRE SET
0270		1.000	ST		Encoder	
0280	-A417.1	1.000	PC	3AFE68978955	COMMUNIC. ADAPTER FEN-31	FEN-31
0290		1.000	ST		Optionmodule	
0300	-A418.1	1.000	PC	3AUA0000107392	COMMUNIC. ADAPTER FDCO-01	
0310		1.000	ST		Controlpanel	
0320	-A47	1.000	PC	3AUA0000108650	FIELDBUS KIT FDPI-02	PANEL BUS ADAPTER
0330	-A48	1.000	PC	3AUA0000108878	CONTROL PANEL KIT DPMP-01	DPMP-01

P345812 / 29711

Cust. Doc. No.	Prep.	Title PART LIST INV2.09 ACS880-107-0078A-3 400V	Item Des. = 2.09 +
Cust. Ref. No.	App.		SAP Doc. No.
Customer WMMP	Project Zhaka Jack-up Lift System Zhaka Jack-up Lift System-1		EPLAN Doc. No. 3ABDC230674 - 2.09
			ABB Ref. No. / Rev. / Sheet Part list_1
			Resp. Dept. / Cont. Part list_2

Part list: 3ABDC230674DU02021

Item	Sort String	Qty.Str	Unit	Component Number	Description and text	Technical data
0340	-A49	1.000	PC	3AXD50000025964	CONTROL PANEL ACS-AP-W MODULE	ASSISTANT PANEL WIRELESS CPU1
0350		1.000	ST		DCfusesupervision	
0360	-K11.1-2	2.000	PC	3AXD50000021313	RELAY DEK_REL_G24/21	250 V;6 A;COIL 24VDC
0370		1.000	ST		FieldBus	
0380	-A438.1	1.000	PC	3AXD50000192779	OPTION MODULE FPNO-21	PROFINET IO
0390		1.000	ST		Supplementtorelay	
0400	(-K11.1)	1.000	PC	3AXD50000021312	TERMINAL BLOCK ST EB2_DIK_RD 2716693	2POLE, 6,15 MM PITCH;FOR DEK RELAYS

P345812 / 29711

Cust. Doc. No.	Prep.	Title PART LIST INV2.09 ACS880-107-0078A-3 400V	Item Des. = 2.09 +
Cust. Ref. No.	App.		SAP Doc. No.
Customer WMMP	Project Zhaka Jack-up Lift System Zhaka Jack-up Lift System-1		EPLAN Doc. No. 3ABDC230674 - 2.09
			ABB Ref. No. / Rev. / Sheet Part list_2
			Resp. Dept. / Cont. &EMA/1

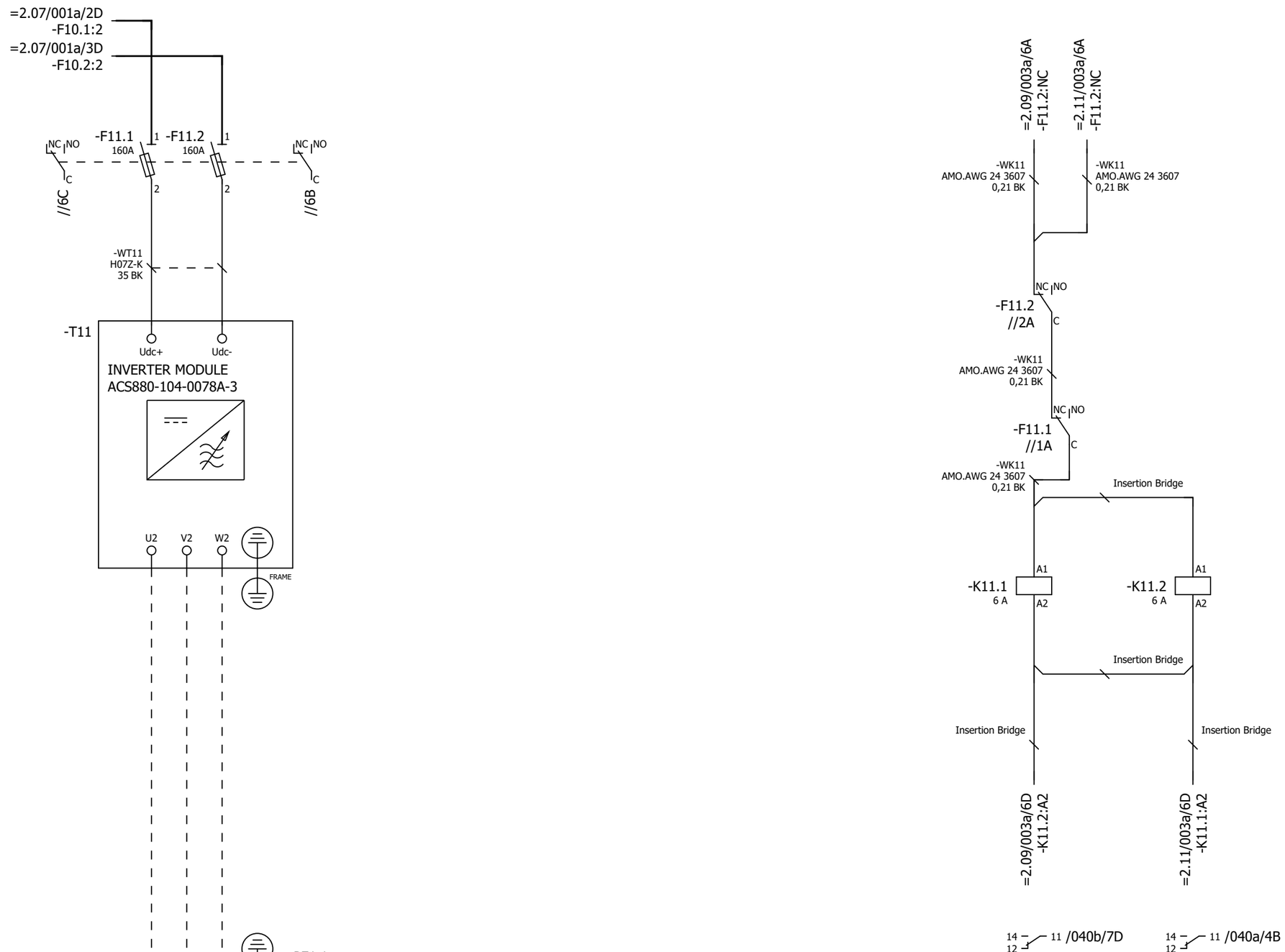

P345812 / 29711

Cust. Doc. No.	Prep. Sky-Xin Zhang 02.08.2023	Title MAIN CIRCUIT	Circuit diagram EFS2
Cust. Ref. No.	App.	INV2.10	SAP Doc. No.
Customer WMMP	Project Zhaka Jack-up Lift System	ACS880-107-0078A-3	EPLAN Doc. No. 3ABDC230674 - 2.10
	Zhaka Jack-up Lift System-1	400V	ABB Ref. No.
			Resp. Dept.

Item Des.
= 2.10
+ 2.07.1

Rev. .1 Sheet 003a
Cont. 040a

Control and status signals	Terminal	Pin
E-STOP FEEDBACK 1 - ESTOP ACTIVE	-XRO1	12
RUNNING 1 - RUNNING	-XRO2	22
FAULT (-1) 1 - NO FAULT	-XRO3	32

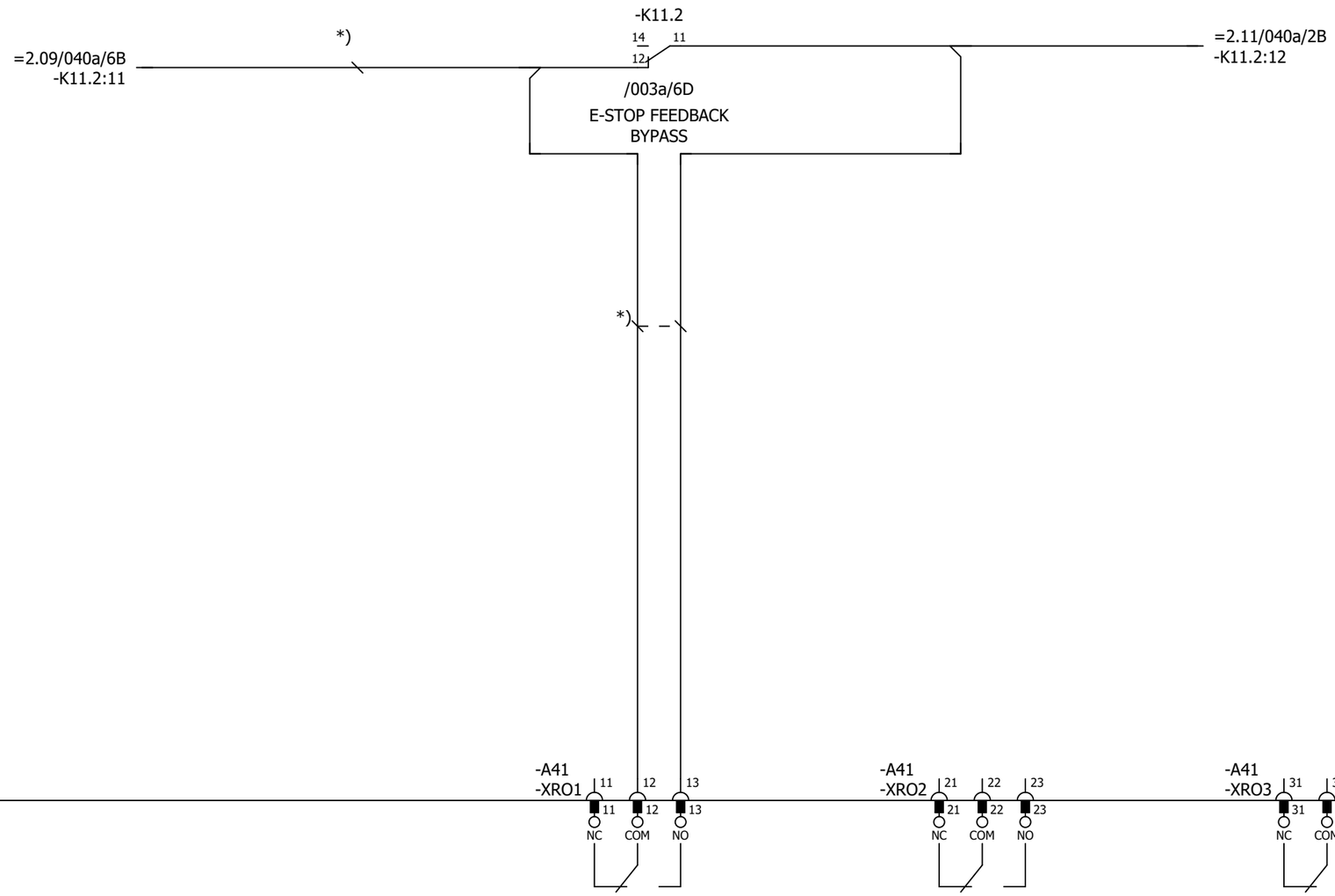

P345812 / 29711

Cust. Doc. No.	Prep. Sky-Xin Zhang 02.08.2023	Title CONTROL BOARD INV2.10 ACS880-107-0078A-3 400V	Circuit diagram EFS2
Cust. Ref. No.	App.		SAP Doc. No.
Customer WMMP	Project Zhaka Jack-up Lift System Zhaka Jack-up Lift System-1		EPLAN Doc. No. 3ABDC230674 - 2.10
			ABB Ref. No.
			Resp. Dept.

Item Des.
= 2.10
+ 2.07.1

Rev. .1 Sheet 040a
Cont. 040b

Control and status signals	Terminal	Pin
DIGITAL INTERLOCK	-XD24	1
START/STOP 1 - START	-XDI	1
FORWARD/REVERSE 1 - REVERSE	-XDI	2
RESET	-XDI	3
EMERGENCY STOP 0 - ACTIVE	-XDI	4
NOT SPECIFIED	-XDI	5
DI6 NOT IN USE	-XDI	6
OUTPUT: READY	-XDIO	1
OUTPUT: RUNNING	-XDIO	2

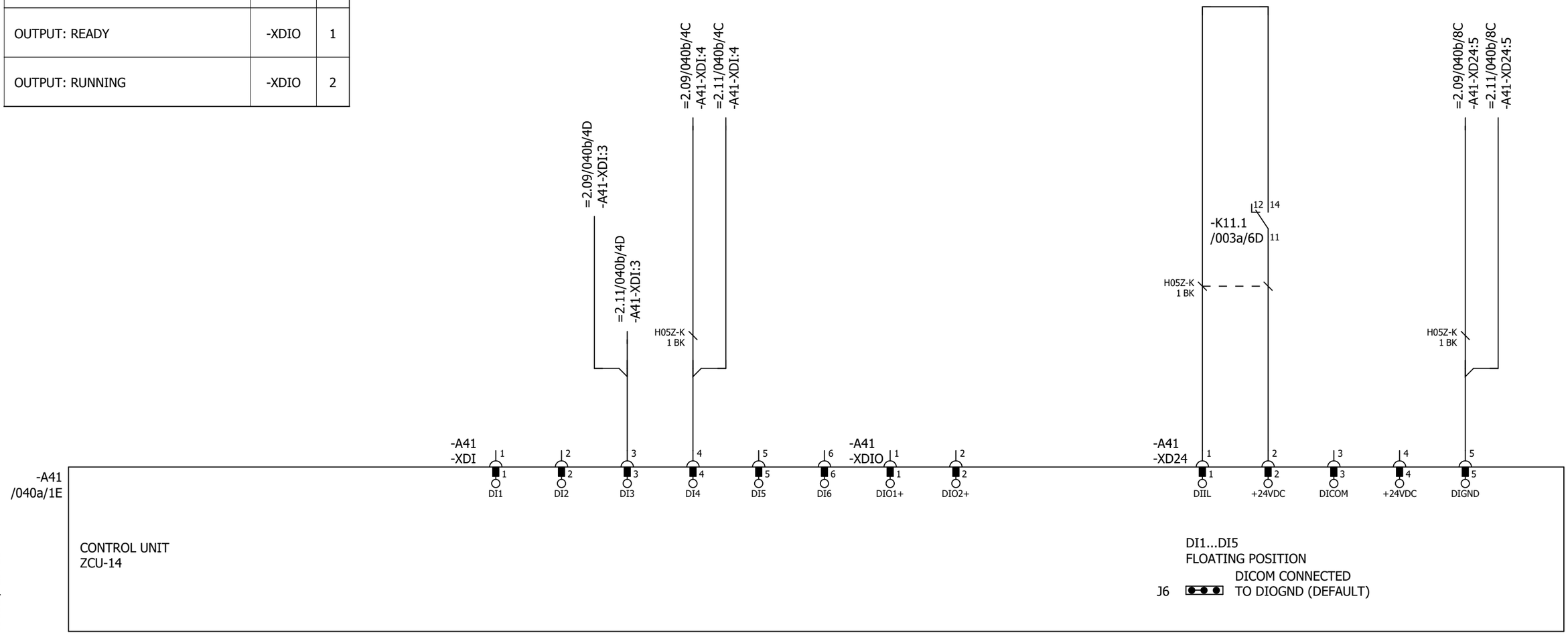

P345812 / 29711

Cust. Doc. No.	Prep. Sky-Xin Zhang 02.08.2023	Title CONTROL BOARD INV2.10 ACS880-107-0078A-3 400V	Circuit diagram EFS2
Cust. Ref. No.	App.		SAP Doc. No.
Customer WMMP	Project Zhaka Jack-up Lift System Zhaka Jack-up Lift System-1		EPLAN Doc. No. 3ABDC230674 - 2.10
			ABB Ref. No.
			Resp. Dept.

Item Des. = 2.10 + 2.07.1

Rev. .1 Sheet 040b

Cont. 040c

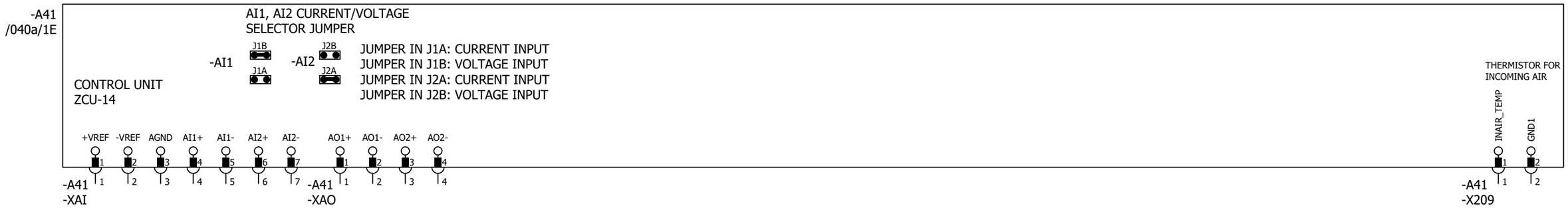

Control and status signals	Terminal	Pin
MOTOR TEMP. MONITORING 0(2)…10V	-XAI	4
AI2 NOT SPECIFIED BY DEFAULT NOT IN USE 0(4)…20mA	-XAI	6
CURR SOU MOT TEMP MONIT 0(4)...20mA	-XAO	1
CURRENT 0(4)…20mA ↔ 0(4)…MOTOR CURRENT	-XAO	3

P345812 / 29711

Cust. Doc. No.	Prep. Sky-Xin Zhang 02.08.2023	Title CONTROL BOARD INV2.10 ACS880-107-0078A-3 400V	Circuit diagram EFS2
Cust. Ref. No.	App.		SAP Doc. No.
Customer WMMP	Project Zhaka Jack-up Lift System Zhaka Jack-up Lift System-1		EPLAN Doc. No. 3ABDC230674 - 2.10
			ABB Ref. No.
			Resp. Dept.

Item Des.
= 2.10
+ 2.07.1

Rev. .1 Sheet 040c
Cont. 040d

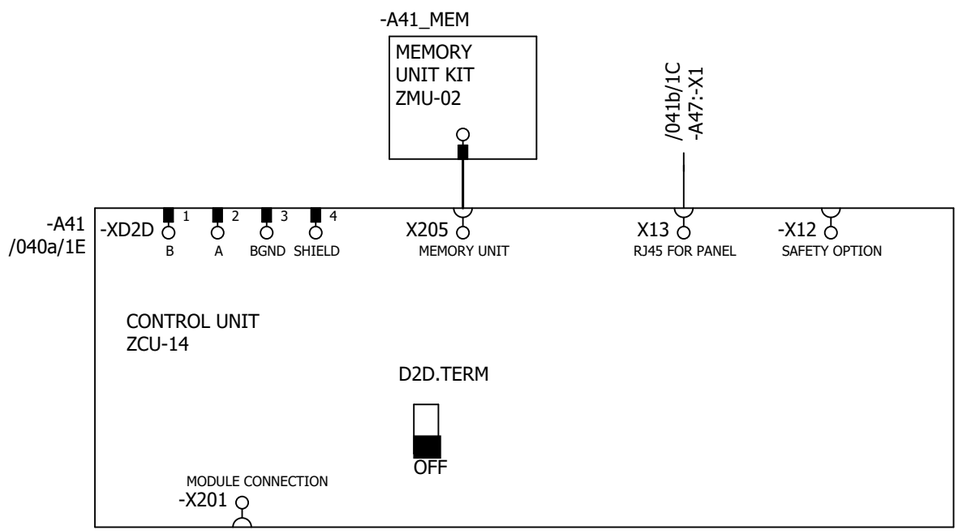

P345812 / 29711

Cust. Doc. No.	Prep. Sky-Xin Zhang 02.08.2023	Title CONTROL BOARD	Circuit diagram EFS2	Item Des.	
Cust. Ref. No.	App.	INV2.10	SAP Doc. No.	= 2.10	
Customer WMMP	Project Zhaka Jack-up Lift System	ACS880-107-0078A-3	EPLAN Doc. No. 3ABDC230674 - 2.10	+ 2.07.1	
	Zhaka Jack-up Lift System-1	400V	ABB Ref. No.	Rev. .1	Sheet 040d
			Resp. Dept.	Cont.	041a

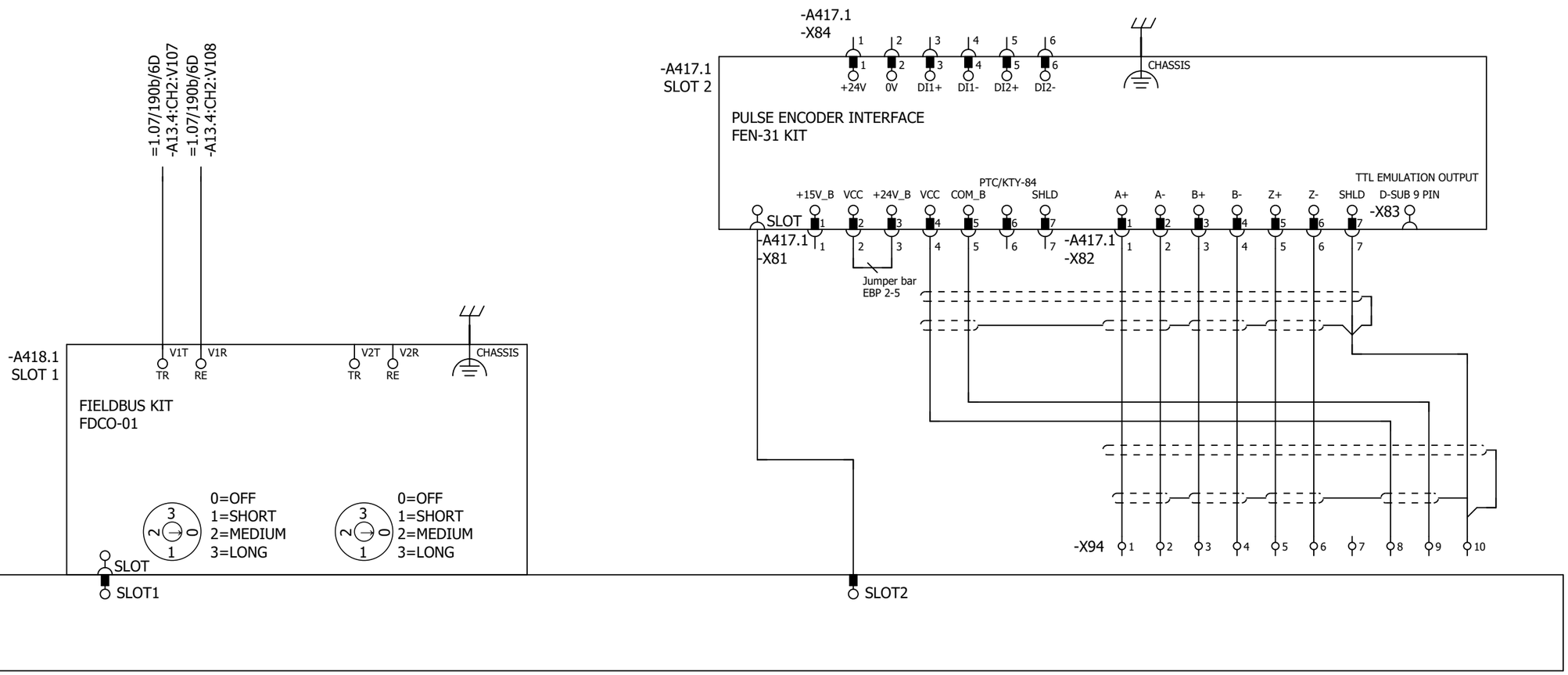

P345812 / 29711

Cust. Doc. No.	Prep. Sky-Xin Zhang 02.08.2023	Title OPTION CARDS	Circuit diagram EFS2
Cust. Ref. No.	App.	INV2.10	SAP Doc. No.
Customer WMMP	Project Zhaka Jack-up Lift System	ACS880-107-0078A-3	EPLAN Doc. No. 3ABDC230674 - 2.10
	Zhaka Jack-up Lift System-1	400V	ABB Ref. No.
			Resp. Dept.

Item Des.
= 2.10
+ 2.07.1

Rev. .1 Sheet 041a
Cont. 041b

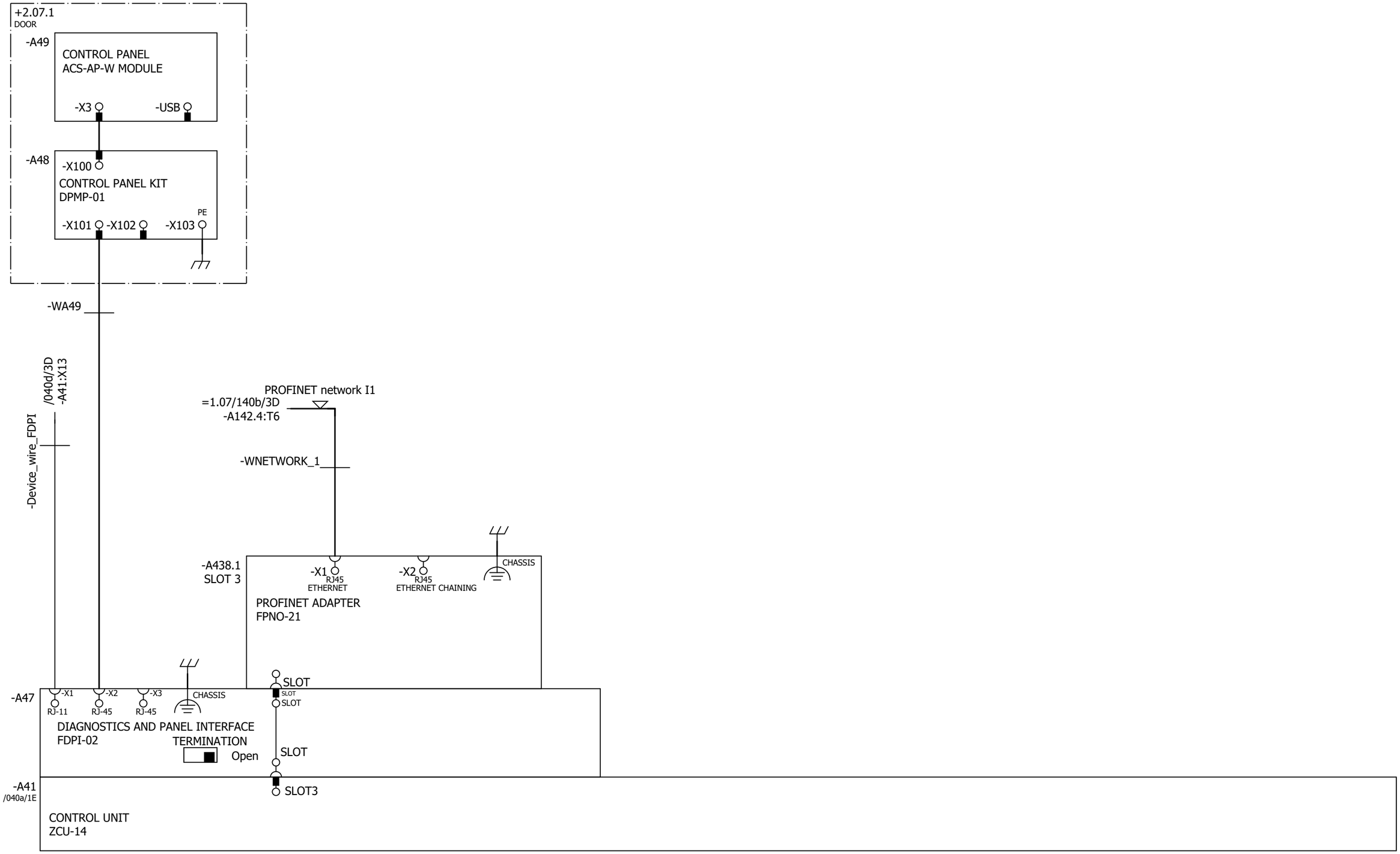

Cust. Doc. No.	Prep. Sky-Xin Zhang 02.08.2023	Title OPTION CARDS	Circuit diagram EFS2	Item Des.	
Cust. Ref. No.	App.	INV2.10	SAP Doc. No.	= 2.10	
Customer WMMP	Project Zhaka Jack-up Lift System	ACS880-107-0078A-3	EPLAN Doc. No. 3ABDC230674 - 2.10	+ 2.07.1	
		400V	ABB Ref. No.	Rev. .1	Sheet 041b
	Zhaka Jack-up Lift System-1		Resp. Dept.	Cont.	061a

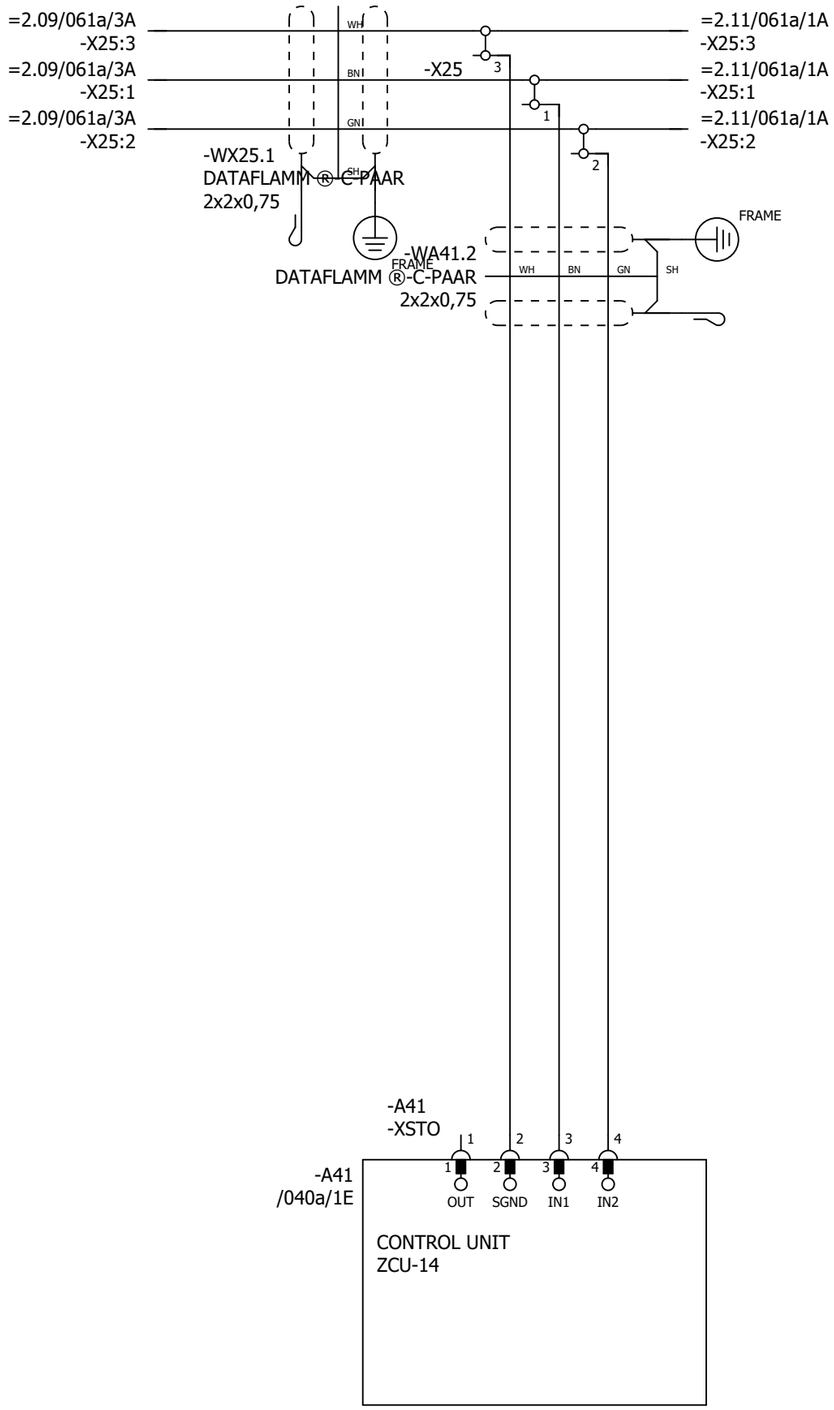

P345812 / 29711

SAFETY CIRCUIT
MACRO REVISION 6
RULES CONVERTED 19.7.2023

Cust. Doc. No.	Prep. Sky-Xin Zhang 02.08.2023	Title SAFETY CIRCUIT INV2.10 ACS880-107-0078A-3 400V	Circuit diagram EFS2
Cust. Ref. No.	App.		SAP Doc. No.
Customer WMMP	Project Zhaka Jack-up Lift System Zhaka Jack-up Lift System-1		EPLAN Doc. No. 3ABDC230674 - 2.10
			ABB Ref. No.
			Resp. Dept.

Item Des.
= 2.10
+ 2.07.1

Rev. .1 Sheet 061a

Cont. &MPC/Part list_1

Part list: 3ABDC230674DU02022

Item	Sort String	Qty.Str	Unit	Component Number	Description and text	Technical data
0010		1.000	ST		ACS880-107-0078A-3+A012+B053+C121+C132+	
0020		1.000	ST		_C206+E210+F272+F287+F288+G300+G307+G315	
0030		1.000	ST		_+G320+G330+G344+H352+H367+J400+K492+L50	
0040		1.000	ST		_2+L503+P913+Q964	
0050		1.000	ST		=2.10	
0060		1.000	ST		+2.07.1,INU3	
0070		1.000	ST		Powerconversionequipment	
0080	-A41_MEM	1.000	PC	3AXD50000006010	MEMORY UNIT KIT ZMU-02	
0090	-T11	1.000	PC	3AUA0000120009-M	ACS880-104-0078A-3+P922	+P922
0100	SCREW	1.000	PC	3AFE68681481	SCREW K30X10 TORX	PT WN1452 ZN
0110	SOFTWARE	1.000	PC	3AUA0000153462	SOFTWARE PRIMARY CONTROL PROGRA	AINF6 FOR ZCU-12/14
0120		1.000	ST		R4imoduleDCfuse	
0130	-F11.1-2	2.000	PC	3AXD50000000219	FUSE FR27UQ69V160T/160A	6.921 CP URQ 27X60MM FERRULE;AR
0140		1.000	ST		R3i-R4imoduleDCfusebase	
0150	(-F11.1-2)	2.000	PC	3AUA0000089227	FUSE HOLDER FUSE BASE US271MI 150A	FUSE BASE US271MI 150A 800V
0160		1.000	ST		24VDCsupplyZCU	
0170	-WA41_1	1.000	PC	3AXD50000005218	WIRE HARNESS 24VDC SUPPLY X51 ZCU V	HALOGEN FREE;X51_A51
0180		1.000	ST		Rooffancontrol	
0190	-WA41_3	1.000	PC	3AXD50000002688	WIRE HARNESS FAN CONTROL MAIN WIRE	HALOGEN FREE;X208_X26.3
0200		1.000	ST		Bottomrowmodulewireharness	
0210	-WT11	1.000	PC	3AXD50000002418	WIRE HARNESS R4I FUSE_MODULE BR V2	HALOGEN FREE;MAIN CIRCUIT WIRE SET
0220		1.000	ST		Encoder	
0230	-A417.1	1.000	PC	3AFE68978955	COMMUNIC. ADAPTER FEN-31	FEN-31
0240		1.000	ST		Optionmodule	
0250	-A418.1	1.000	PC	3AUA0000107392	COMMUNIC. ADAPTER FDCO-01	
0260		1.000	ST		Controlpanel	
0270	-A47	1.000	PC	3AUA0000108650	FIELDBUS KIT FDPI-02	PANEL BUS ADAPTER
0280	-A48	1.000	PC	3AUA0000108878	CONTROL PANEL KIT DPMP-01	DPMP-01
0290	-A49	1.000	PC	3AXD50000025964	CONTROL PANEL ACS-AP-W MODULE	ASSISTANT PANEL WIRELESS CPU1
0300		1.000	ST		DCfusesupervision	
0310	-K11.1-2	2.000	PC	3AXD50000021313	RELAY DEK_REL_G24/21	250 V;6 A;COIL 24VDC
0320		1.000	ST		FieldBus	
0330	-A438.1	1.000	PC	3AXD50000192779	OPTION MODULE FPNO-21	PROFINET IO

P345812 / 29711

Cust. Doc. No.	Prep.	Title PART LIST INV2.10 ACS880-107-0078A-3 400V	Item Des. = 2.10 +
Cust. Ref. No.	App.		SAP Doc. No.
Customer WMMP	Project Zhaka Jack-up Lift System Zhaka Jack-up Lift System-1		EPLAN Doc. No. 3ABDC230674 - 2.10
			ABB Ref. No. / Rev. / Sheet Part list_1
			Resp. Dept. / Cont. Part list_2

Part list: 3ABDC230674DU02022

Item	Sort String	Qty.Str	Unit	Component Number	Description and text	Technical data
0340		1.000	ST		Supplementtorelay	
0350	(-K11.1)	1.000	PC	3AXD50000021312	TERMINAL BLOCK ST EB2_DIK_RD 2716693	2POLE, 6,15 MM PITCH;FOR DEK RELAYS

P345812 / 29711

Cust. Doc. No.	Prep.	Title PART LIST INV2.10 ACS880-107-0078A-3 400V	Item Des. = 2.10 +
Cust. Ref. No.	App.		SAP Doc. No.
Customer WMMP	Project Zhaka Jack-up Lift System Zhaka Jack-up Lift System-1		EPLAN Doc. No. 3ABDC230674 - 2.10
			ABB Ref. No. / Rev. / Sheet Part list_2
			Resp. Dept. / Cont. &EMA/1

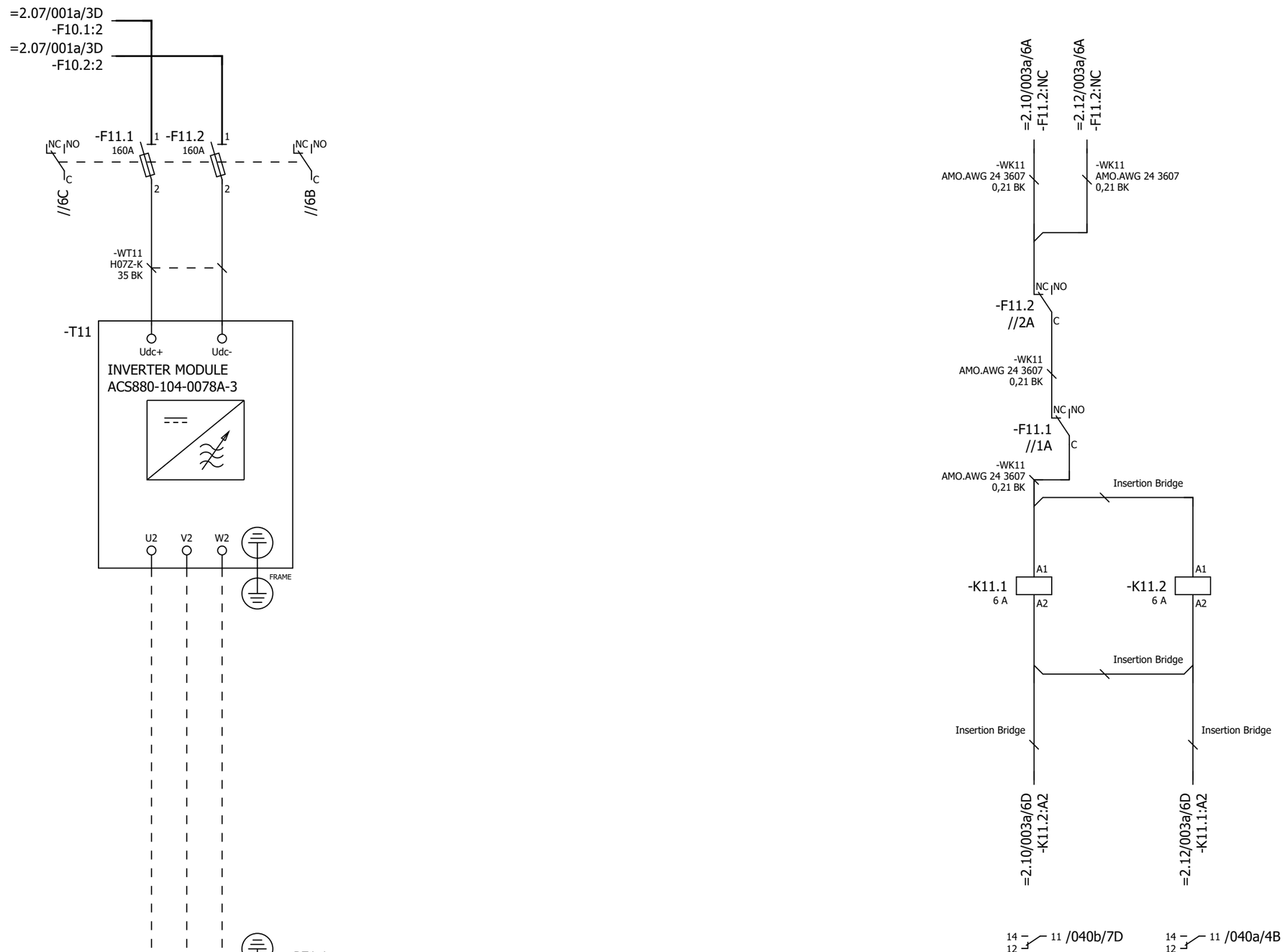

P345812 / 29711

Cust. Doc. No.	Prep. Sky-Xin Zhang 02.08.2023	Title MAIN CIRCUIT	Circuit diagram EFS2
Cust. Ref. No.	App.	INV2.11	SAP Doc. No.
Customer WMMP	Project Zhaka Jack-up Lift System	ACS880-107-0078A-3	EPLAN Doc. No. 3ABDC230674 - 2.11
	Zhaka Jack-up Lift System-1	400V	ABB Ref. No.
			Resp. Dept.

Item Des.
= 2.11
+ 2.07.1

Rev. .1 Sheet 003a
Cont. 040a

Control and status signals	Terminal	Pin
E-STOP FEEDBACK 1 - ESTOP ACTIVE	-XRO1	12
RUNNING 1 - RUNNING	-XRO2	22
FAULT (-1) 1 - NO FAULT	-XRO3	32

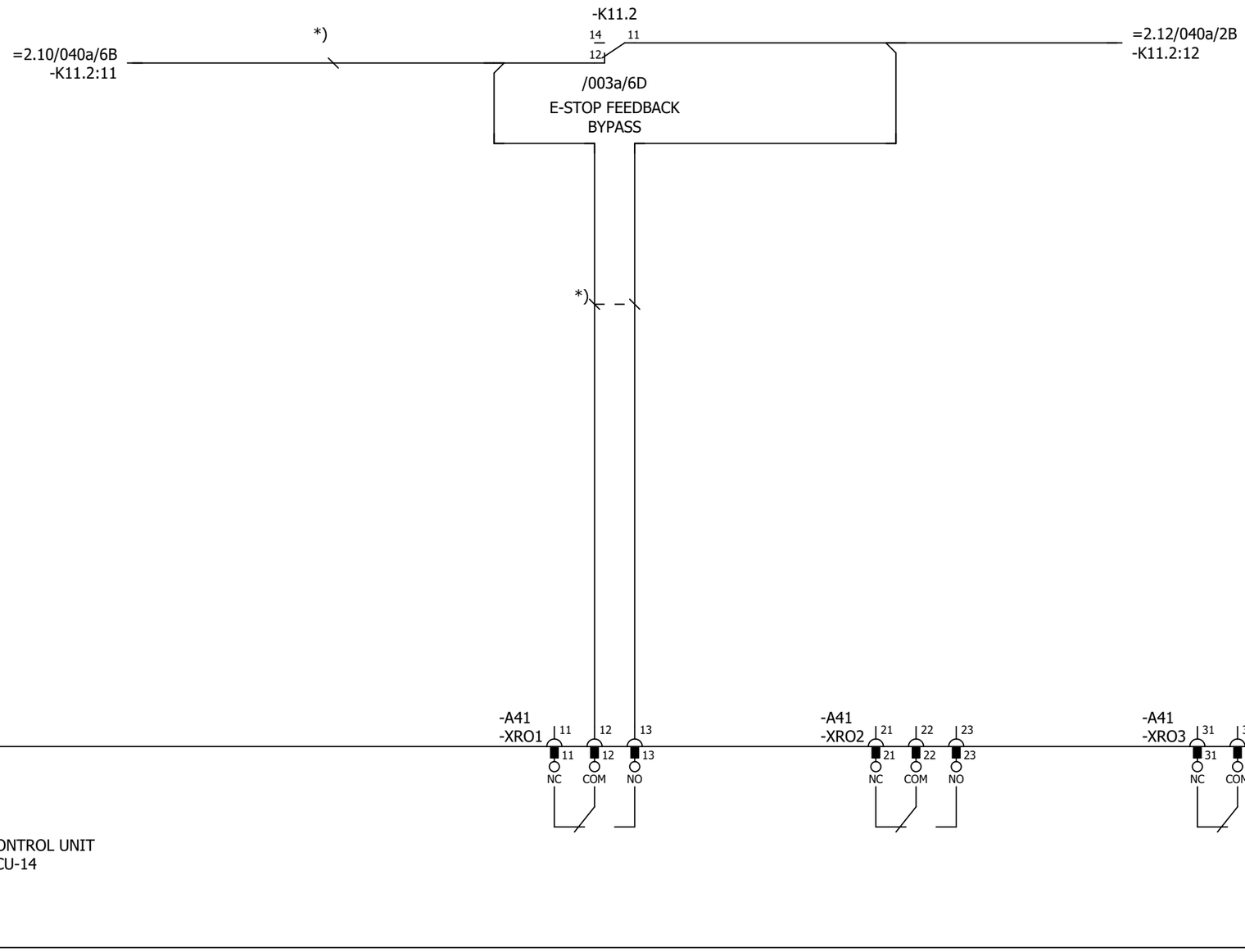

P345812 / 29711

Cust. Doc. No.	Prep. Sky-Xin Zhang 02.08.2023	Title CONTROL BOARD INV2.11 ACS880-107-0078A-3 400V	Circuit diagram EFS2
Cust. Ref. No.	App.		SAP Doc. No.
Customer WMMP	Project Zhaka Jack-up Lift System Zhaka Jack-up Lift System-1		EPLAN Doc. No. 3ABDC230674 - 2.11
			ABB Ref. No.
			Resp. Dept.

Item Des.
= 2.11
+ 2.07.1

Rev. .1 Sheet 040a
Cont. 040b

Control and status signals	Terminal	Pin
DIGITAL INTERLOCK	-XD24	1
START/STOP 1 - START	-XDI	1
FORWARD/REVERSE 1 - REVERSE	-XDI	2
RESET	-XDI	3
EMERGENCY STOP 0 - ACTIVE	-XDI	4
NOT SPECIFIED	-XDI	5
DI6 NOT IN USE	-XDI	6
OUTPUT: READY	-XDIO	1
OUTPUT: RUNNING	-XDIO	2

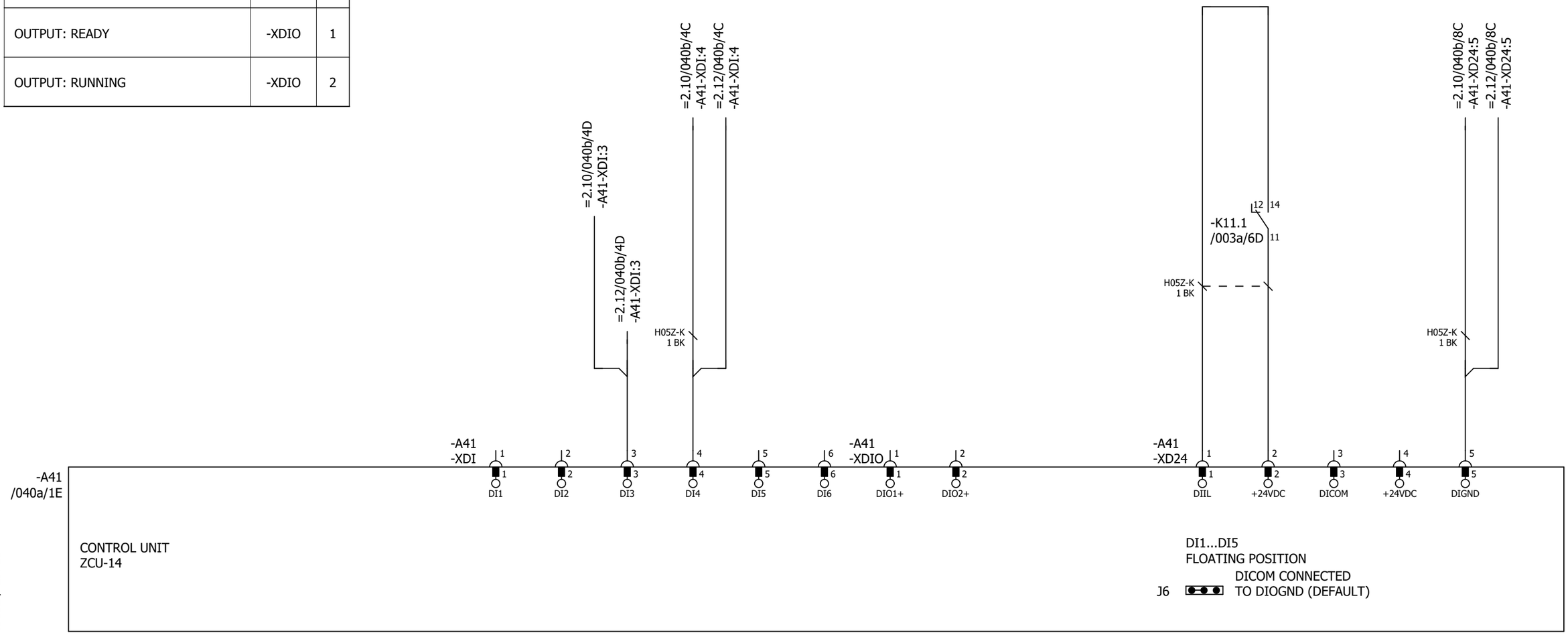

P345812 / 29711

Cust. Doc. No.	Prep. Sky-Xin Zhang 02.08.2023	Title CONTROL BOARD INV2.11 ACS880-107-0078A-3 400V	Circuit diagram EFS2
Cust. Ref. No.	App.		SAP Doc. No.
Customer WMMP	Project Zhaka Jack-up Lift System Zhaka Jack-up Lift System-1		EPLAN Doc. No. 3ABDC230674 - 2.11
			ABB Ref. No.
			Resp. Dept.

Item Des.	= 2.11 + 2.07.1
Rev. .1	Sheet 040b
Cont.	040c

Control and status signals	Terminal	Pin
MOTOR TEMP. MONITORING 0(2)…10V	-XAI	4
AI2 NOT SPECIFIED BY DEFAULT NOT IN USE 0(4)…20mA	-XAI	6
CURR SOU MOT TEMP MONIT 0(4)...20mA	-XAO	1
CURRENT 0(4)…20mA ↔ 0(4)…MOTOR CURRENT	-XAO	3

P345812 / 29711

Cust. Doc. No.	Prep. Sky-Xin Zhang 02.08.2023	Title CONTROL BOARD INV2.11 ACS880-107-0078A-3 400V	Circuit diagram EFS2
Cust. Ref. No.	App.		SAP Doc. No.
Customer WMMP	Project Zhaka Jack-up Lift System Zhaka Jack-up Lift System-1		EPLAN Doc. No. 3ABDC230674 - 2.11
			ABB Ref. No.
			Resp. Dept.

Item Des.
= 2.11
+ 2.07.1

Rev. .1 Sheet 040c
Cont. 040d

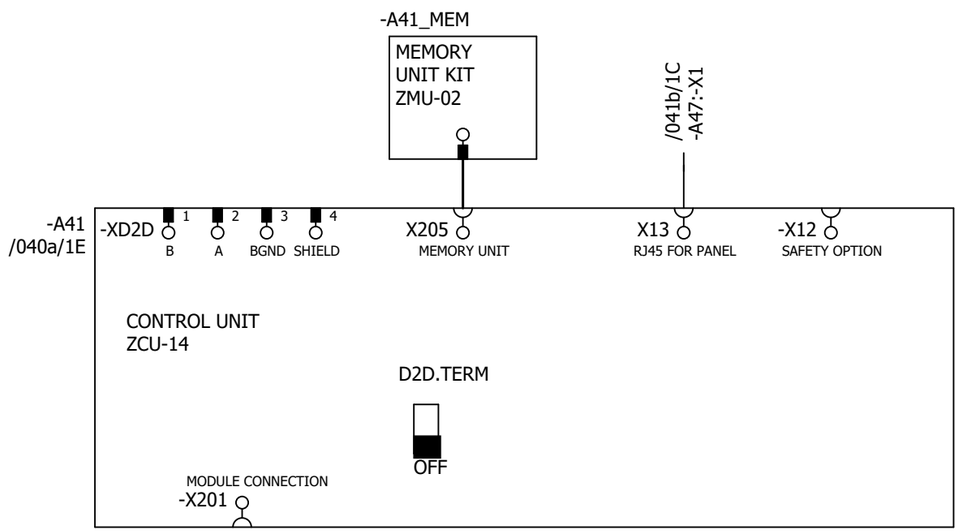

P345812 / 29711

Cust. Doc. No.	Prep. Sky-Xin Zhang 02.08.2023	Title CONTROL BOARD INV2.11 ACS880-107-0078A-3 400V	Circuit diagram EFS2
Cust. Ref. No.	App.		SAP Doc. No.
Customer WMMP	Project Zhaka Jack-up Lift System Zhaka Jack-up Lift System-1		EPLAN Doc. No. 3ABDC230674 - 2.11
			ABB Ref. No.
			Resp. Dept.

Item Des.	= 2.11 + 2.07.1
Rev. .1	Sheet 040d
Cont.	041a

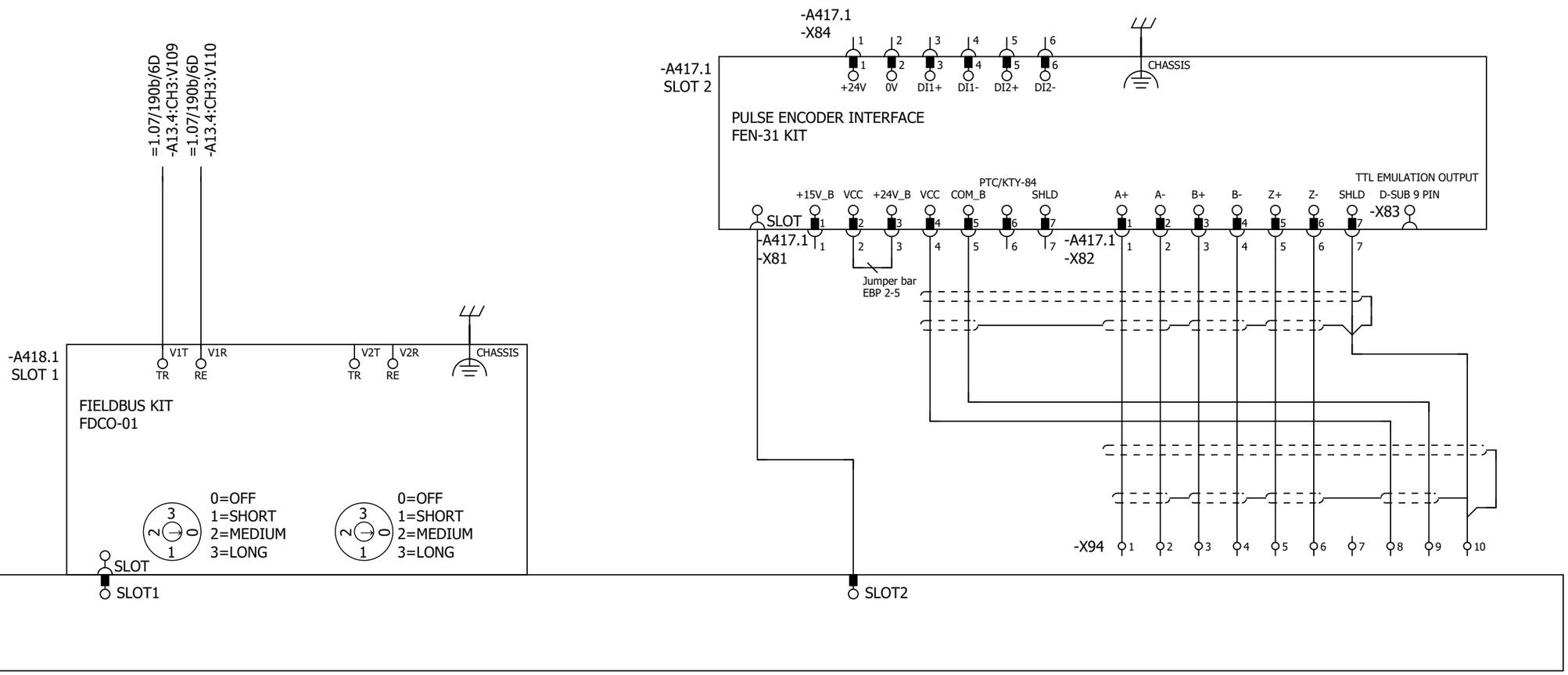

Cust. Doc. No.	Prep. Sky-Xin Zhang 02.08.2023	Title OPTION CARDS	Circuit diagram EFS2	Item Des.	
Cust. Ref. No.	App.	INV2.11	SAP Doc. No.	= 2.11	
Customer WMMP	Project Zhaka Jack-up Lift System	ACS880-107-0078A-3	EPLAN Doc. No. 3ABDC230674 - 2.11	+ 2.07.1	
	Zhaka Jack-up Lift System-1	400V	ABB Ref. No.	Rev. .1	Sheet 041a
			Resp. Dept.	Cont.	041b

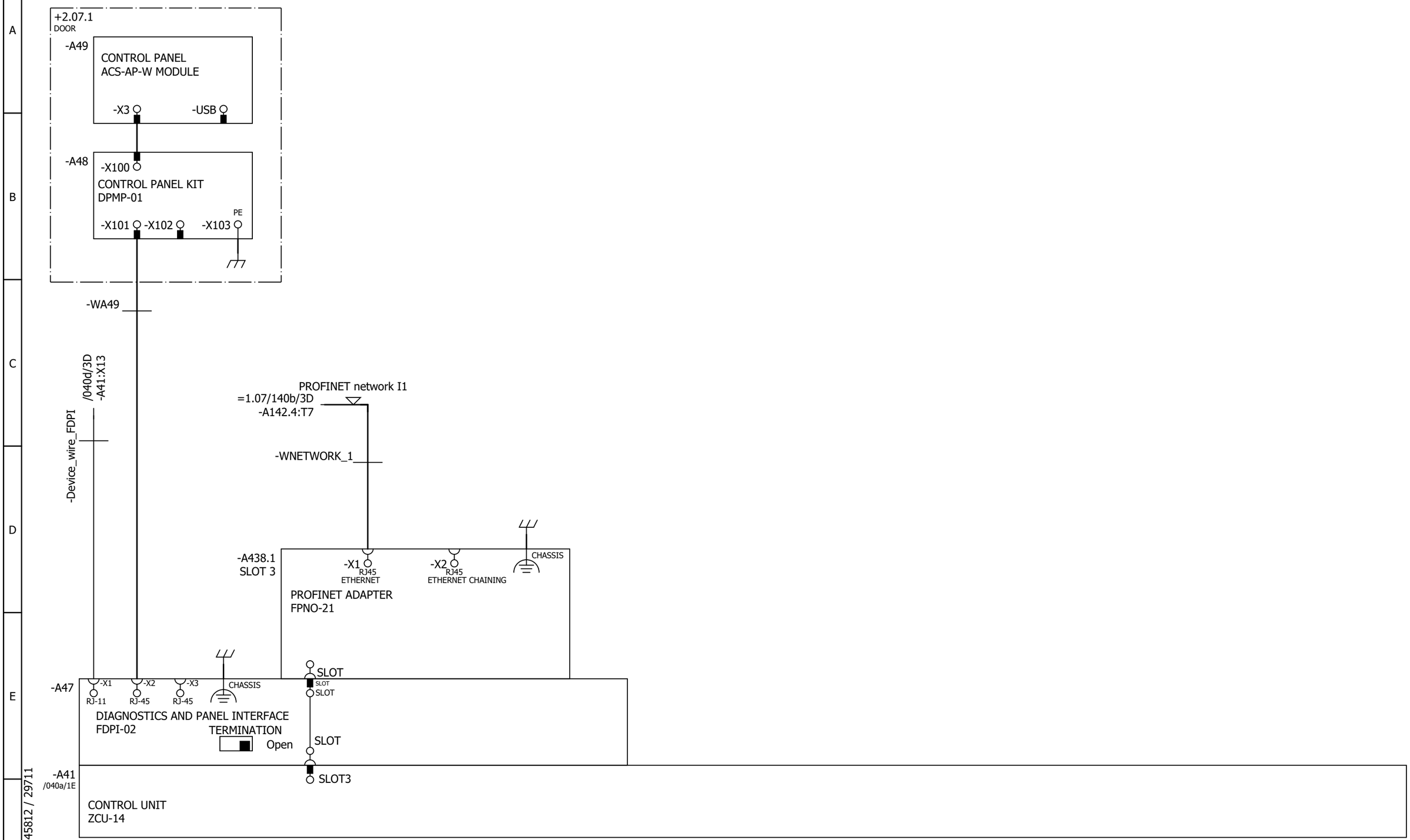

Cust. Doc. No.	Prep. Sky-Xin Zhang 02.08.2023	Title OPTION CARDS	Circuit diagram EFS2	Item Des.	
Cust. Ref. No.	App.	INV2.11	SAP Doc. No.	= 2.11	
Customer WMMP	Project Zhaka Jack-up Lift System	ACS880-107-0078A-3	EPLAN Doc. No. 3ABDC230674 - 2.11	+ 2.07.1	
	Zhaka Jack-up Lift System-1	400V	ABB Ref. No.	Rev. .1	Sheet 041b
			Resp. Dept.	Cont.	061a

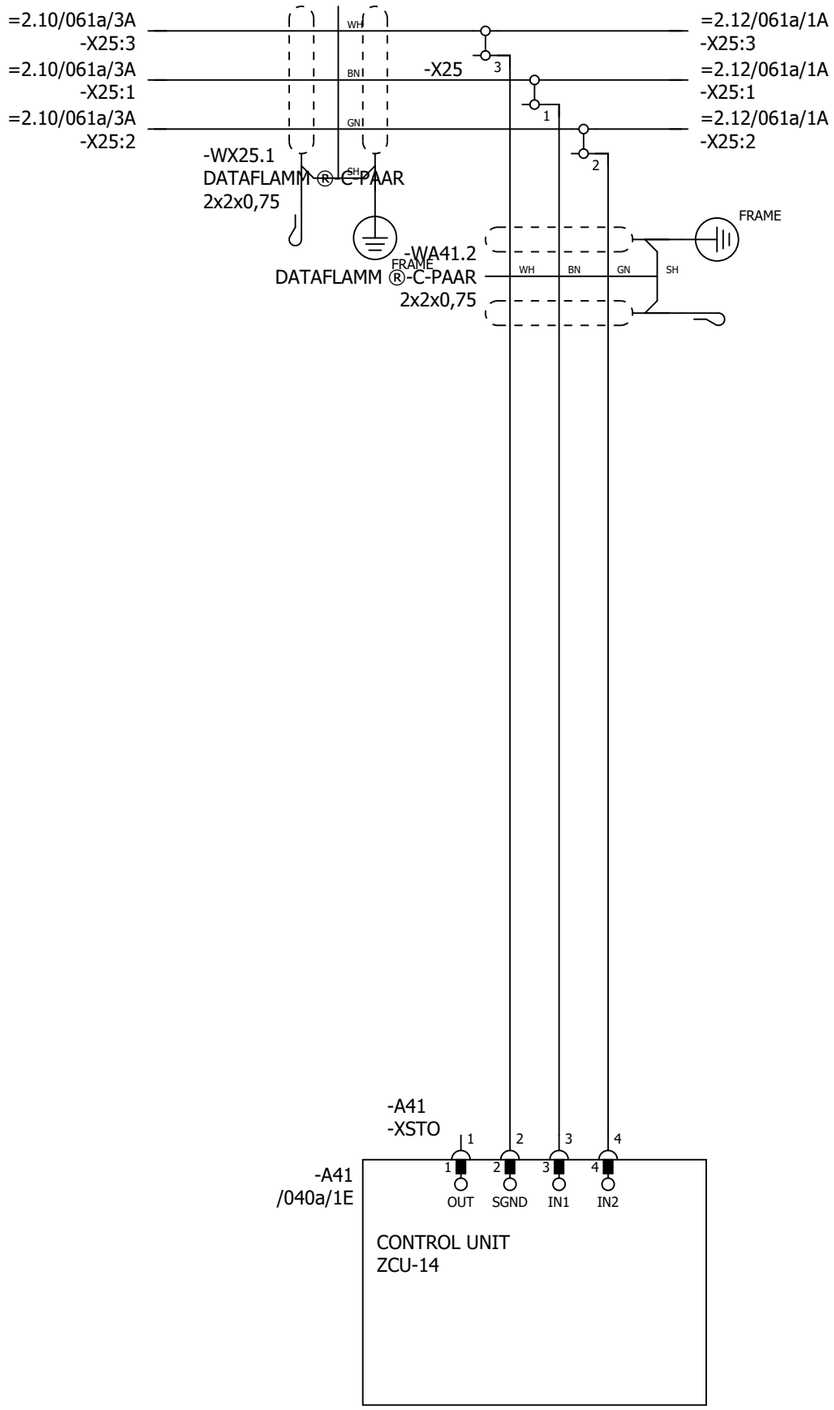

P345812 / 29711

SAFETY CIRCUIT
MACRO REVISION 6
RULES CONVERTED 19.7.2023

Cust. Doc. No.	Prep. Sky-Xin Zhang 02.08.2023	Title SAFETY CIRCUIT	Circuit diagram EFS2	Item Des.	
Cust. Ref. No.	App.	INV2.11	SAP Doc. No.	= 2.11	
Customer WMMP	Project Zhaka Jack-up Lift System	ACS880-107-0078A-3	EPLAN Doc. No. 3ABDC230674 - 2.11	+ 2.07.1	
	Zhaka Jack-up Lift System-1	400V	ABB Ref. No.	Rev. .1	Sheet 061a
			Resp. Dept.	Cont.	&MPC/Part list_1

Part list: 3ABDC230674DU02023

Item	Sort String	Qty.Str	Unit	Component Number	Description and text	Technical data
0010		1.000	ST		ACS880-107-0078A-3+A012+B053+C121+C132+	
0020		1.000	ST		_C206+E210+F272+F287+F288+G300+G307+G315	
0030		1.000	ST		_+G320+G330+G344+H352+H367+K450+K492+K49	
0040		1.000	ST		_3+L502+L503+P913+Q964	
0050		1.000	ST		=2.11	
0060		1.000	ST		+2.07.1,INU3	
0070		1.000	ST		Powerconversionequipment	
0080	-A41_MEM	1.000	PC	3AXD50000006010	MEMORY UNIT KIT ZMU-02	
0090	-T11	1.000	PC	3AUA0000120009-M	ACS880-104-0078A-3+P922	+P922
0100	SCREW	1.000	PC	3AFE68681481	SCREW K30X10 TORX	PT WN1452 ZN
0110	SOFTWARE	1.000	PC	3AUA0000153462	SOFTWARE PRIMARY CONTROL PROGRA	AINF6 FOR ZCU-12/14
0120		1.000	ST		R4imoduleDCfuse	
0130	-F11.1-2	2.000	PC	3AXD50000000219	FUSE FR27UQ69V160T/160A	6.921 CP URQ 27X60MM FERRULE;AR
0140		1.000	ST		R3i-R4imoduleDCfusebase	
0150	(-F11.1-2)	2.000	PC	3AUA0000089227	FUSE HOLDER FUSE BASE US271MI 150A	FUSE BASE US271MI 150A 800V
0160		1.000	ST		24VDCsupplyZCU	
0170	-WA41_1	1.000	PC	3AXD50000005218	WIRE HARNESS 24VDC SUPPLY X51 ZCU V	HALOGEN FREE;X51_A51
0180		1.000	ST		Rooffancontrol	
0190	-WA41_3	1.000	PC	3AXD50000002688	WIRE HARNESS FAN CONTROL MAIN WIRE	HALOGEN FREE;X208_X26.3
0200		1.000	ST		Bottomrowmodulewireharness	
0210	-WT11	1.000	PC	3AXD50000002418	WIRE HARNESS R4I FUSE_MODULE BR V2	HALOGEN FREE;MAIN CIRCUIT WIRE SET
0220		1.000	ST		Encoder	
0230	-A417.1	1.000	PC	3AFE68978955	COMMUNIC. ADAPTER FEN-31	FEN-31
0240		1.000	ST		Optionmodule	
0250	-A418.1	1.000	PC	3AUA0000107392	COMMUNIC. ADAPTER FDCO-01	
0260		1.000	ST		Controlpanel	
0270	-A47	1.000	PC	3AUA0000108650	FIELDBUS KIT FDPI-02	PANEL BUS ADAPTER
0280		1.000	ST		DCfusesupervision	
0290	-K11.1-2	2.000	PC	3AXD50000021313	RELAY DEK_REL_G24/21	250 V;6 A;COIL 24VDC
0300		1.000	ST		Profinetswitch	
0310		1.000	ST		FieldBus	
0320	-A438.1	1.000	PC	3AXD50000192779	OPTION MODULE FPNO-21	PROFINET IO
0330		1.000	ST		Supplementtorelay	

P345812 / 29711

Cust. Doc. No.	Prep.	Title PART LIST INV2.11 ACS880-107-0078A-3 400V	Item Des. = 2.11 +
Cust. Ref. No.	App.		SAP Doc. No.
Customer WMMP	Project Zhaka Jack-up Lift System Zhaka Jack-up Lift System-1		EPLAN Doc. No. 3ABDC230674 - 2.11
			ABB Ref. No. / Rev. / Sheet Part list_1
			Resp. Dept. / Cont. Part list_2

Part list: 3ABDC230674DU02023

Item	Sort String	Qty.Str	Unit	Component Number	Description and text	Technical data
0340	(-K11.1)	1.000	PC	3AXD50000021312	TERMINAL BLOCK ST EB2_DIK_RD 2716693	2POLE, 6,15 MM PITCH;FOR DEK RELAYS

P345812 / 29711

Cust. Doc. No.	Prep.	Title PART LIST INV2.11 ACS880-107-0078A-3 400V	Item Des. = 2.11 +
Cust. Ref. No.	App.		SAP Doc. No.
Customer WMMP	Project Zhaka Jack-up Lift System Zhaka Jack-up Lift System-1		EPLAN Doc. No. 3ABDC230674 - 2.11
			ABB Ref. No. / Rev. / Sheet Part list_2
			Resp. Dept. / Cont. &EMA/1

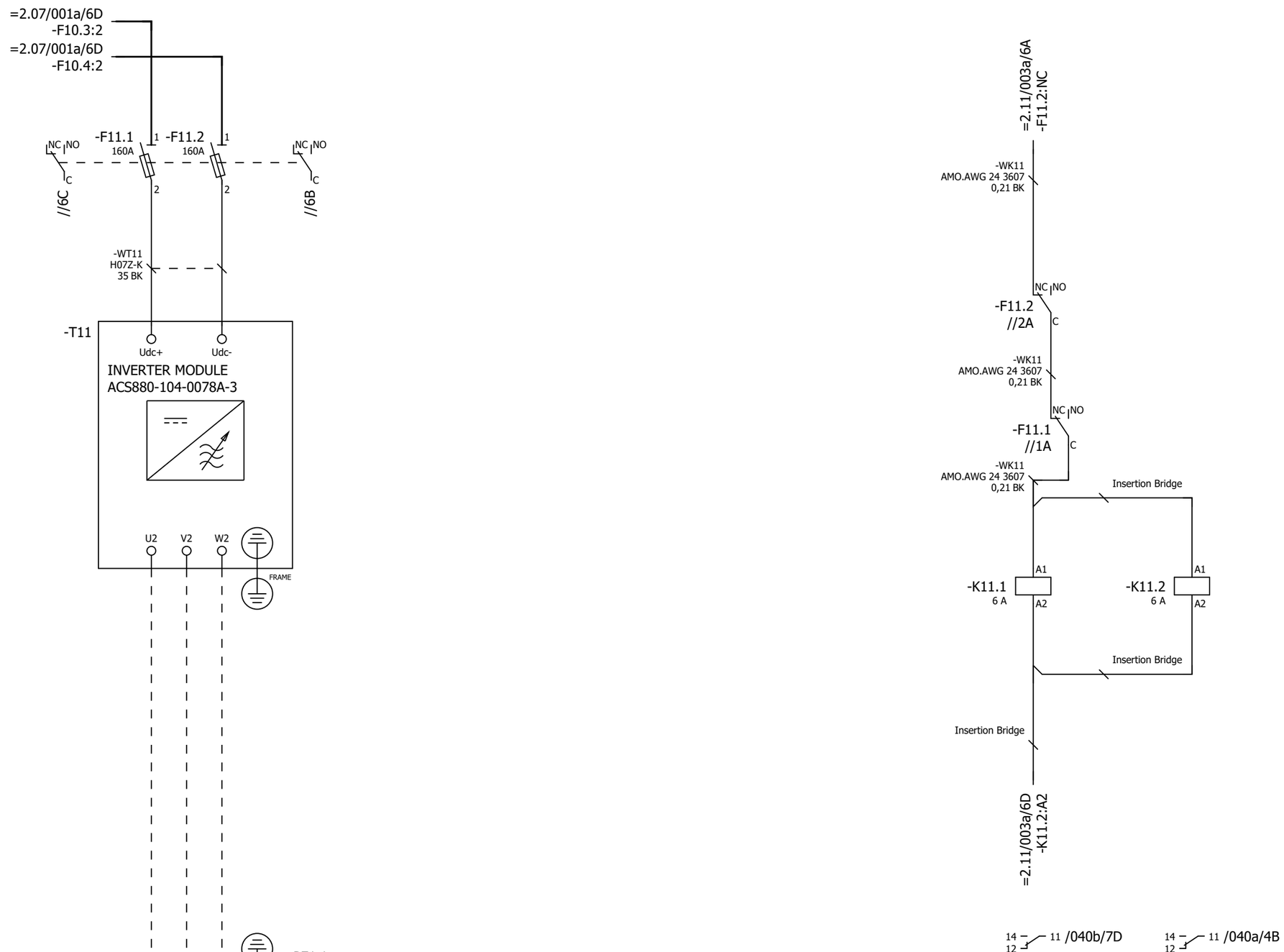

P345812 / 29711

Cust. Doc. No.	Prep. Sky-Xin Zhang 02.08.2023	Title MAIN CIRCUIT	Circuit diagram EFS2
Cust. Ref. No.	App.	INV2.12	SAP Doc. No.
Customer WMMP	Project Zhaka Jack-up Lift System	ACS880-107-0078A-3	EPLAN Doc. No. 3ABDC230674 - 2.12
	Zhaka Jack-up Lift System-1	400V	ABB Ref. No.
			Resp. Dept.

Item Des.
= 2.12
+ 2.07.1

Rev. .1 Sheet 003a
Cont. 040a

Control and status signals	Terminal	Pin
E-STOP FEEDBACK 1 - ESTOP ACTIVE	-XRO1	12
RUNNING 1 - RUNNING	-XRO2	22
FAULT (-1) 1 - NO FAULT	-XRO3	32

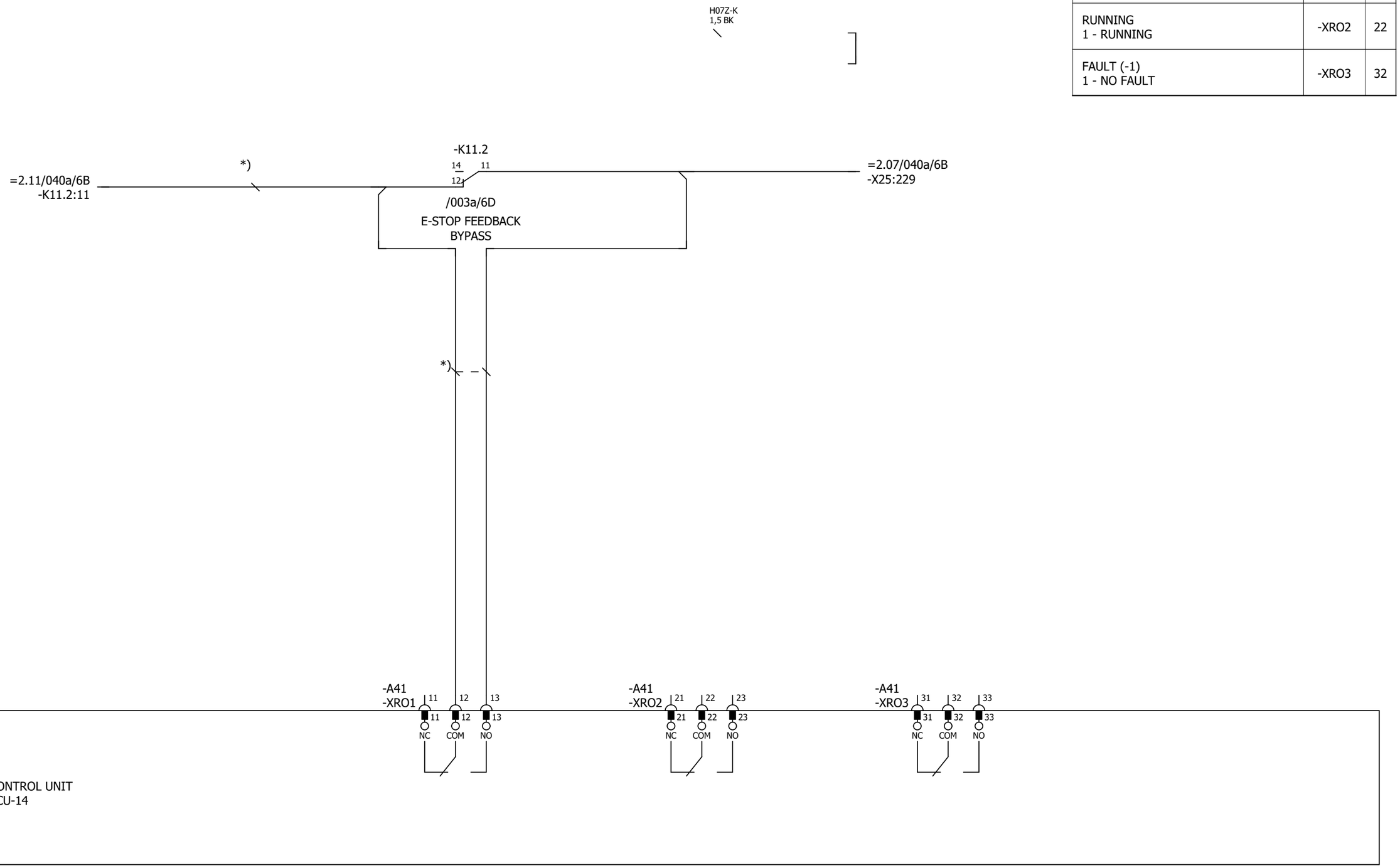

Cust. Doc. No.	Prep. Sky-Xin Zhang 02.08.2023	Title CONTROL BOARD INV2.12 ACS880-107-0078A-3 400V	Circuit diagram EFS2
Cust. Ref. No.	App.		SAP Doc. No.
Customer WMMP	Project Zhaka Jack-up Lift System Zhaka Jack-up Lift System-1		EPLAN Doc. No. 3ABDC230674 - 2.12
			ABB Ref. No.
			Resp. Dept.

Item Des.
= 2.12
+ 2.07.1

Rev. .1 Sheet 040a
Cont. 040b

Control and status signals	Terminal	Pin
DIGITAL INTERLOCK	-XD24	1
START/STOP 1 - START	-XDI	1
FORWARD/REVERSE 1 - REVERSE	-XDI	2
RESET	-XDI	3
EMERGENCY STOP 0 - ACTIVE	-XDI	4
NOT SPECIFIED	-XDI	5
DI6 NOT IN USE	-XDI	6
OUTPUT: READY	-XDIO	1
OUTPUT: RUNNING	-XDIO	2

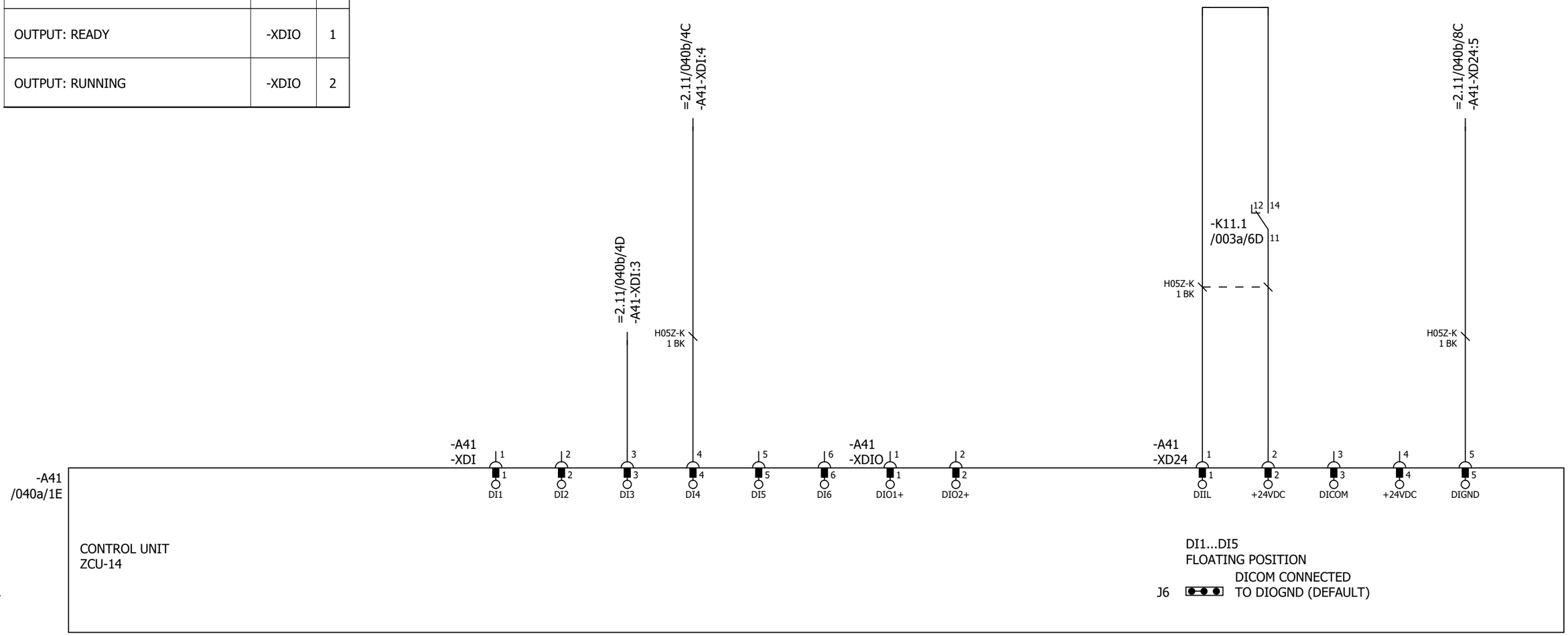

P345812 / 29711

Cust. Doc. No.	Prep. Sky-Xin Zhang 02.08.2023	Title CONTROL BOARD INV2.12 ACS880-107-0078A-3 400V	Circuit diagram EFS2
Cust. Ref. No.	App.		SAP Doc. No.
Customer WMMP	Project Zhaka Jack-up Lift System Zhaka Jack-up Lift System-1		EPLAN Doc. No. 3ABDC230674 - 2.12
			ABB Ref. No.
			Resp. Dept.

Item Des.
= 2.12
+ 2.07.1

Rev. .1 Sheet 040b
Cont. 040c

Control and status signals	Terminal	Pin
MOTOR TEMP. MONITORING 0(2)…10V	-XAI	4
AI2 NOT SPECIFIED BY DEFAULT NOT IN USE 0(4)…20mA	-XAI	6
CURR SOU MOT TEMP MONIT 0(4)...20mA	-XAO	1
CURRENT 0(4)…20mA ↔ 0(4)…MOTOR CURRENT	-XAO	3

P345812 / 29711

Cust. Doc. No.	Prep. Sky-Xin Zhang 02.08.2023	Title CONTROL BOARD INV2.12 ACS880-107-0078A-3 400V	Circuit diagram EFS2
Cust. Ref. No.	App.		SAP Doc. No.
Customer WMMP	Project Zhaka Jack-up Lift System Zhaka Jack-up Lift System-1		EPLAN Doc. No. 3ABDC230674 - 2.12
			ABB Ref. No.
			Resp. Dept.

Item Des.
= 2.12
+ 2.07.1

Rev. .1 Sheet 040c
Cont. 040d

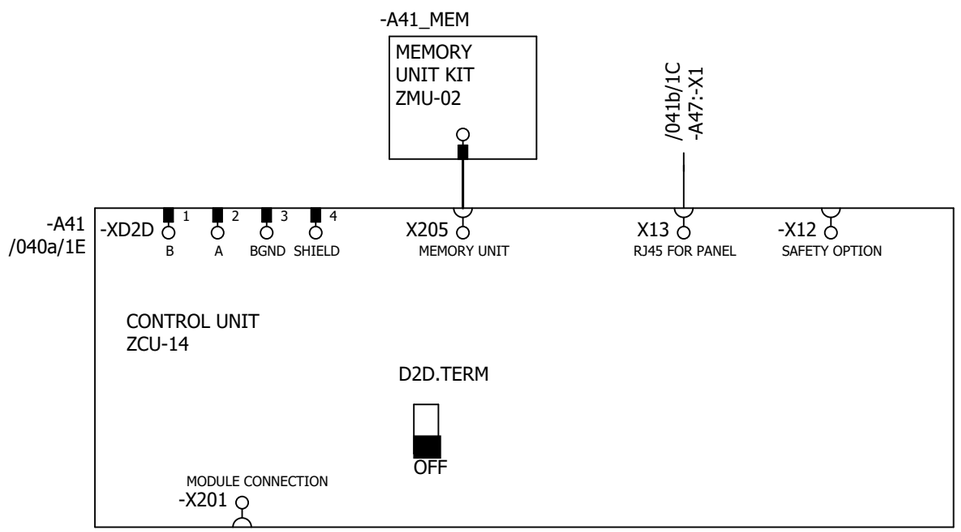

P345812 / 29711

Cust. Doc. No.	Prep. Sky-Xin Zhang 02.08.2023	Title CONTROL BOARD	Circuit diagram EFS2	Item Des.	
Cust. Ref. No.	App.	INV2.12	SAP Doc. No.	= 2.12	
Customer WMMP	Project Zhaka Jack-up Lift System	ACS880-107-0078A-3	EPLAN Doc. No. 3ABDC230674 - 2.12	+ 2.07.1	
	Zhaka Jack-up Lift System-1	400V	ABB Ref. No.	Rev. .1	Sheet 040d
			Resp. Dept.	Cont.	041a

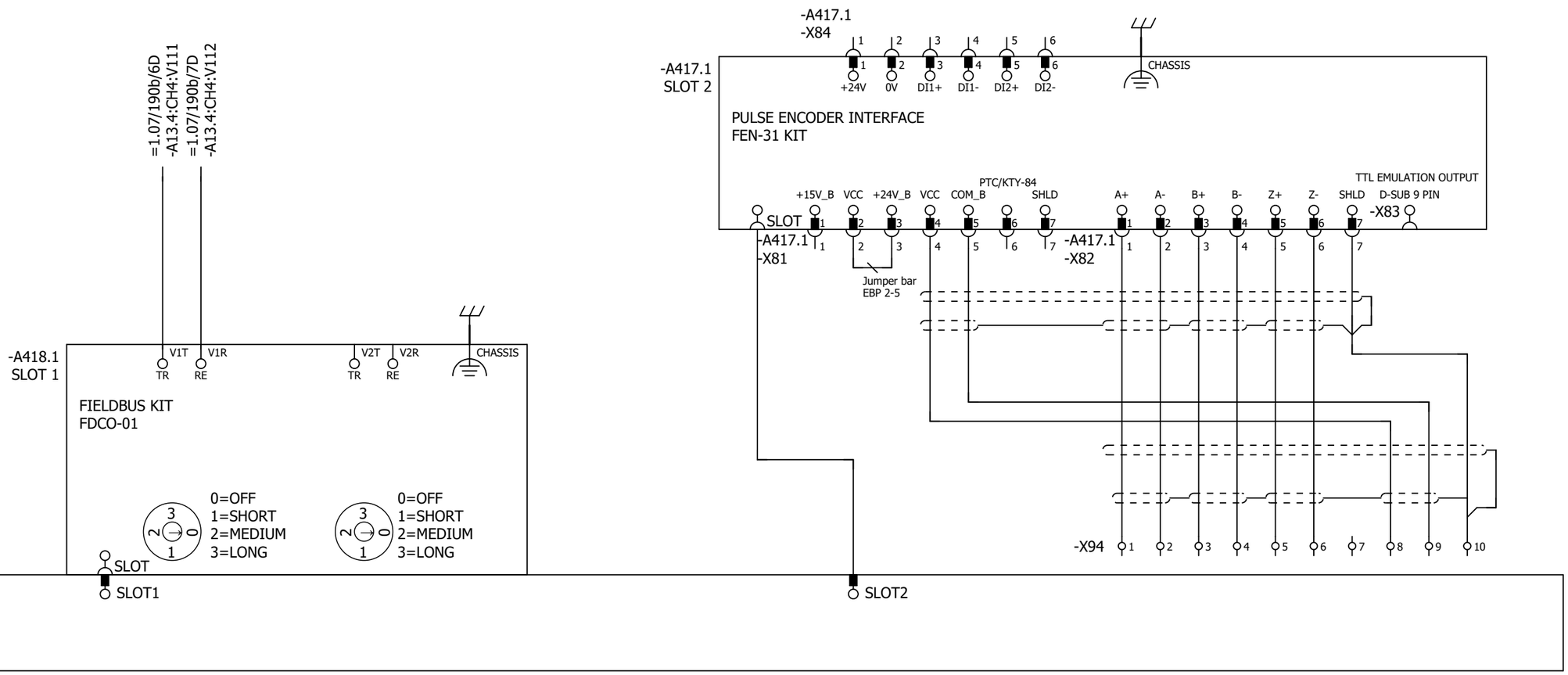

Cust. Doc. No.	Prep. Sky-Xin Zhang 02.08.2023	Title OPTION CARDS	Circuit diagram EFS2	Item Des.	
Cust. Ref. No.	App.	INV2.12	SAP Doc. No.	= 2.12	
Customer WMMP	Project Zhaka Jack-up Lift System	ACS880-107-0078A-3	EPLAN Doc. No. 3ABDC230674 - 2.12	+ 2.07.1	
	Zhaka Jack-up Lift System-1	400V	ABB Ref. No.	Rev. .1	Sheet 041a
			Resp. Dept.	Cont.	041b

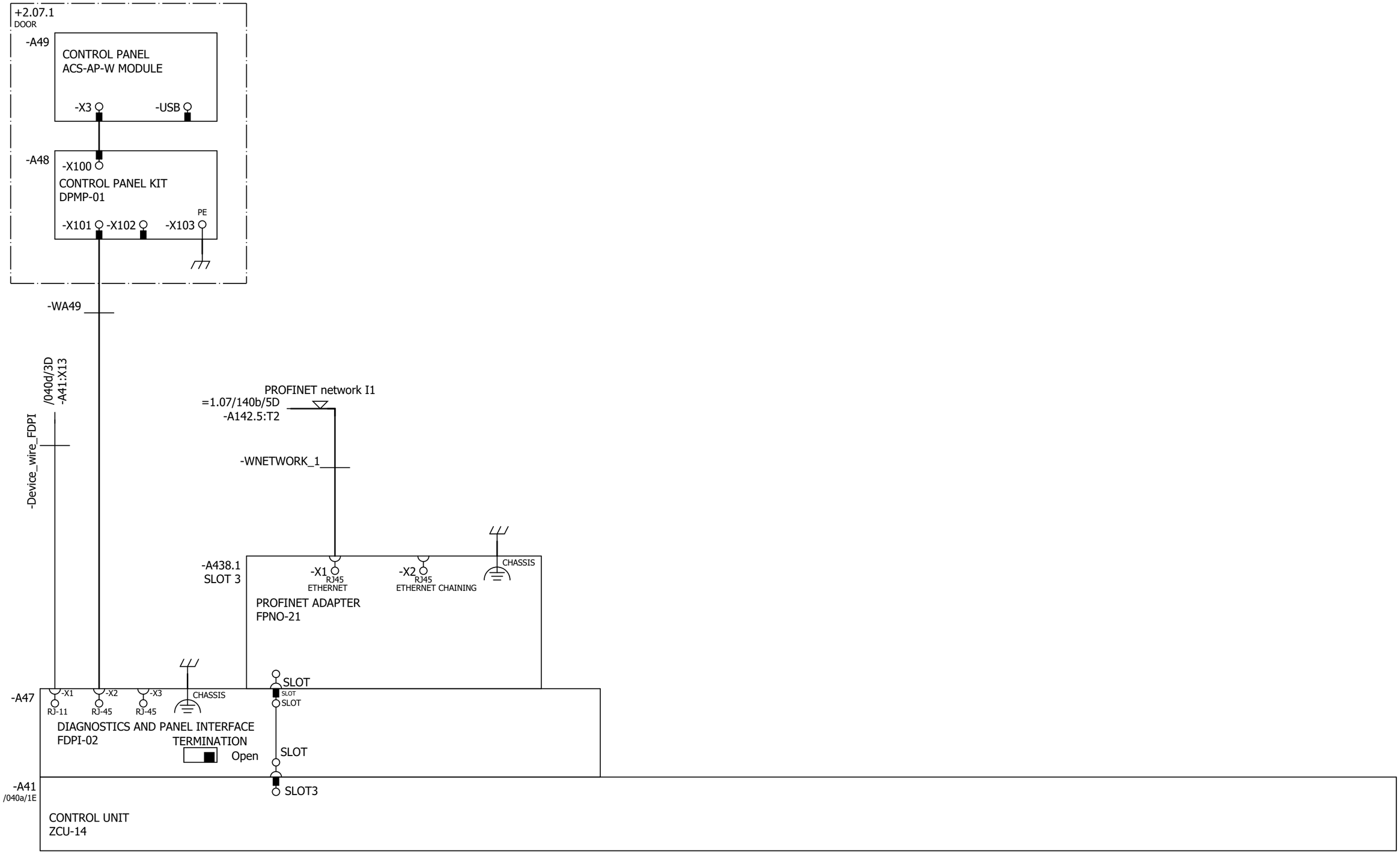

Cust. Doc. No.	Prep. Sky-Xin Zhang 02.08.2023	Title OPTION CARDS	Circuit diagram EFS2	Item Des.	
Cust. Ref. No.	App.	INV2.12	SAP Doc. No.	= 2.12	
Customer WMMP	Project Zhaka Jack-up Lift System	ACS880-107-0078A-3	EPLAN Doc. No. 3ABDC230674 - 2.12	+ 2.07.1	
	Zhaka Jack-up Lift System-1	400V	ABB Ref. No.	Rev. .1	Sheet 041b
			Resp. Dept.	Cont.	061a

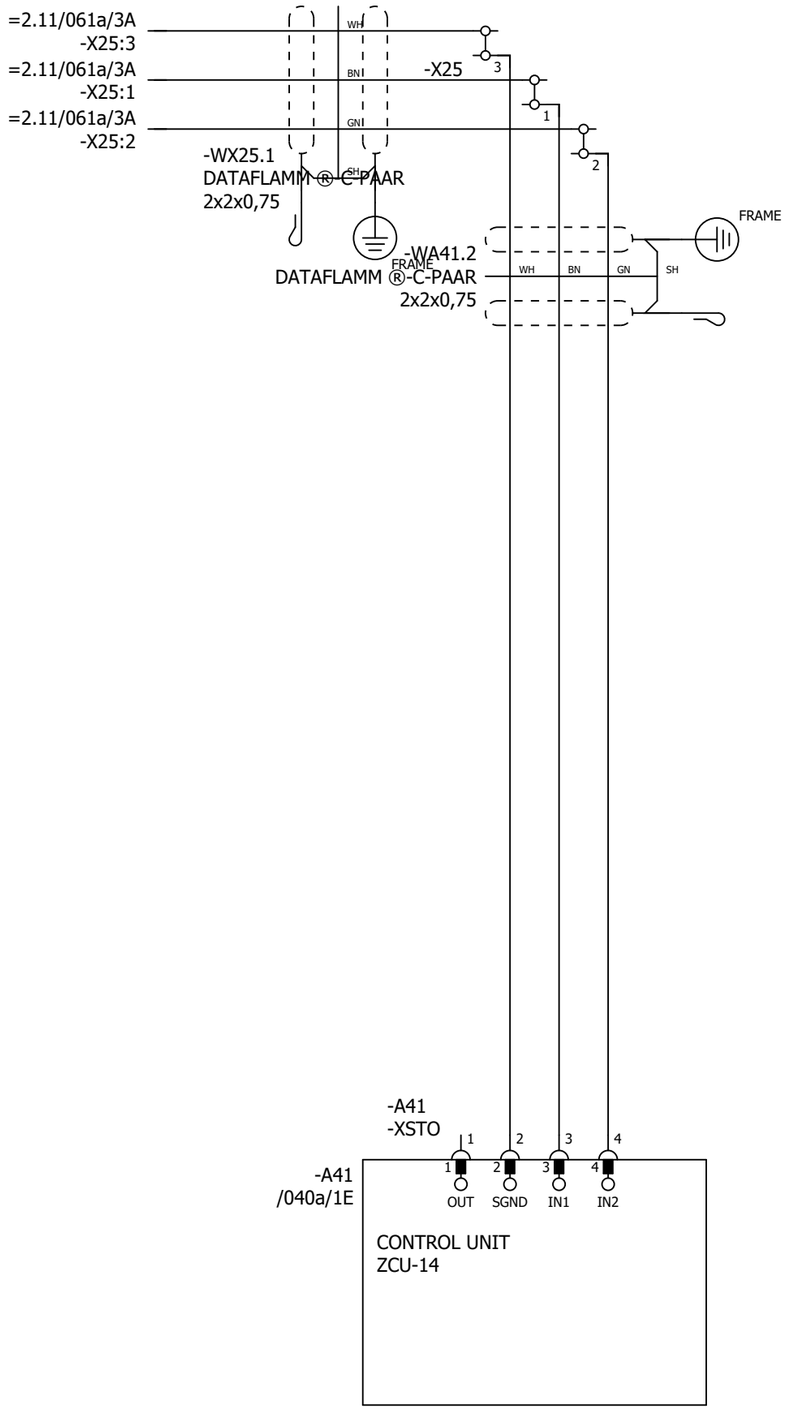

P345812 / 29711

SAFETY CIRCUIT
MACRO REVISION 6
RULES CONVERTED 19.7.2023

Cust. Doc. No.	Prep. Sky-Xin Zhang 02.08.2023	Title SAFETY CIRCUIT INV2.12 ACS880-107-0078A-3 400V	Circuit diagram EFS2
Cust. Ref. No.	App.		SAP Doc. No.
Customer WMMP	Project Zhaka Jack-up Lift System Zhaka Jack-up Lift System-1		EPLAN Doc. No. 3ABDC230674 - 2.12
			ABB Ref. No.
			Resp. Dept.

Item Des.
= 2.12
+ 2.07.1

Rev. .1 Sheet 061a

Cont. &MPC/Part list_1

Part list: 3ABDC230674DU02024

Item	Sort String	Qty.Str	Unit	Component Number	Description and text	Technical data
0010		1.000	ST		ACS880-107-0078A-3+A012+B053+C121+C132+	
0020		1.000	ST		_C206+E210+F272+F287+F288+G300+G307+G315	
0030		1.000	ST		_+G320+G330+G344+H352+H367+K450+K492+L50	
0040		1.000	ST		_2+L503+P913+Q964	
0050		1.000	ST		=2.12	
0060		1.000	ST		+2.12.1,INU3	
0070		1.000	ST		Powerconversionequipment	
0080	-A41_MEM	1.000	PC	3AXD50000006010	MEMORY UNIT KIT ZMU-02	
0090	-T11	1.000	PC	3AUA0000120009-M	ACS880-104-0078A-3+P922	+P922
0100	SCREW	1.000	PC	3AFE68681481	SCREW K30X10 TORX	PT WN1452 ZN
0110	SOFTWARE	1.000	PC	3AUA0000153462	SOFTWARE PRIMARY CONTROL PROGRA	AINF6 FOR ZCU-12/14
0120		1.000	ST		R4imoduleDCfuse	
0130	-F11.1-2	2.000	PC	3AXD50000000219	FUSE FR27UQ69V160T/160A	6.921 CP URQ 27X60MM FERRULE;AR
0140		1.000	ST		R3i-R4imoduleDCfusebase	
0150	(-F11.1-2)	2.000	PC	3AUA0000089227	FUSE HOLDER FUSE BASE US271MI 150A	FUSE BASE US271MI 150A 800V
0160		1.000	ST		24VDCsupplyZCU	
0170	-WA41_1	1.000	PC	3AXD50000005218	WIRE HARNESS 24VDC SUPPLY X51 ZCU V	HALOGEN FREE;X51_A51
0180		1.000	ST		Rooffancontrol	
0190	-WA41_3	1.000	PC	3AXD50000002688	WIRE HARNESS FAN CONTROL MAIN WIRE	HALOGEN FREE;X208_X26.3
0200		1.000	ST		Bottomrowmodulewireharness	
0210	-WT11	1.000	PC	3AXD50000002418	WIRE HARNESS R4I FUSE_MODULE BR V2	HALOGEN FREE;MAIN CIRCUIT WIRE SET
0220		1.000	ST		Encoder	
0230	-A417.1	1.000	PC	3AFE68978955	COMMUNIC. ADAPTER FEN-31	FEN-31
0240		1.000	ST		Optionmodule	
0250	-A418.1	1.000	PC	3AUA0000107392	COMMUNIC. ADAPTER FDCO-01	
0260		1.000	ST		Controlpanel	
0270	-A47	1.000	PC	3AUA0000108650	FIELDBUS KIT FDPI-02	PANEL BUS ADAPTER
0280		1.000	ST		DCfusesupervision	
0290	-K11.1-2	2.000	PC	3AXD50000021313	RELAY DEK_REL_G24/21	250 V;6 A;COIL 24VDC
0300		1.000	ST		FieldBus	
0310	-A438.1	1.000	PC	3AXD50000192779	OPTION MODULE FPNO-21	PROFINET IO
0320		1.000	ST		Supplementtorelay	
0330	(-K11.1)	1.000	PC	3AXD50000021312	TERMINAL BLOCK ST EB2_DIK_RD 2716693	2POLE, 6,15 MM PITCH;FOR DEK RELAYS

P345812 / 29711

Cust. Doc. No.	Prep.	Title PART LIST INV2.12 ACS880-107-0078A-3 400V	Item Des. = 2.12 +
Cust. Ref. No.	App.	SAP Doc. No.	
Customer WMMP	Project Zhaka Jack-up Lift System Zhaka Jack-up Lift System-1	EPLAN Doc. No. 3ABDC230674 - 2.12	
		ABB Ref. No.	Rev. / Sheet Part list_1
		Resp. Dept.	Cont. &EMA/1

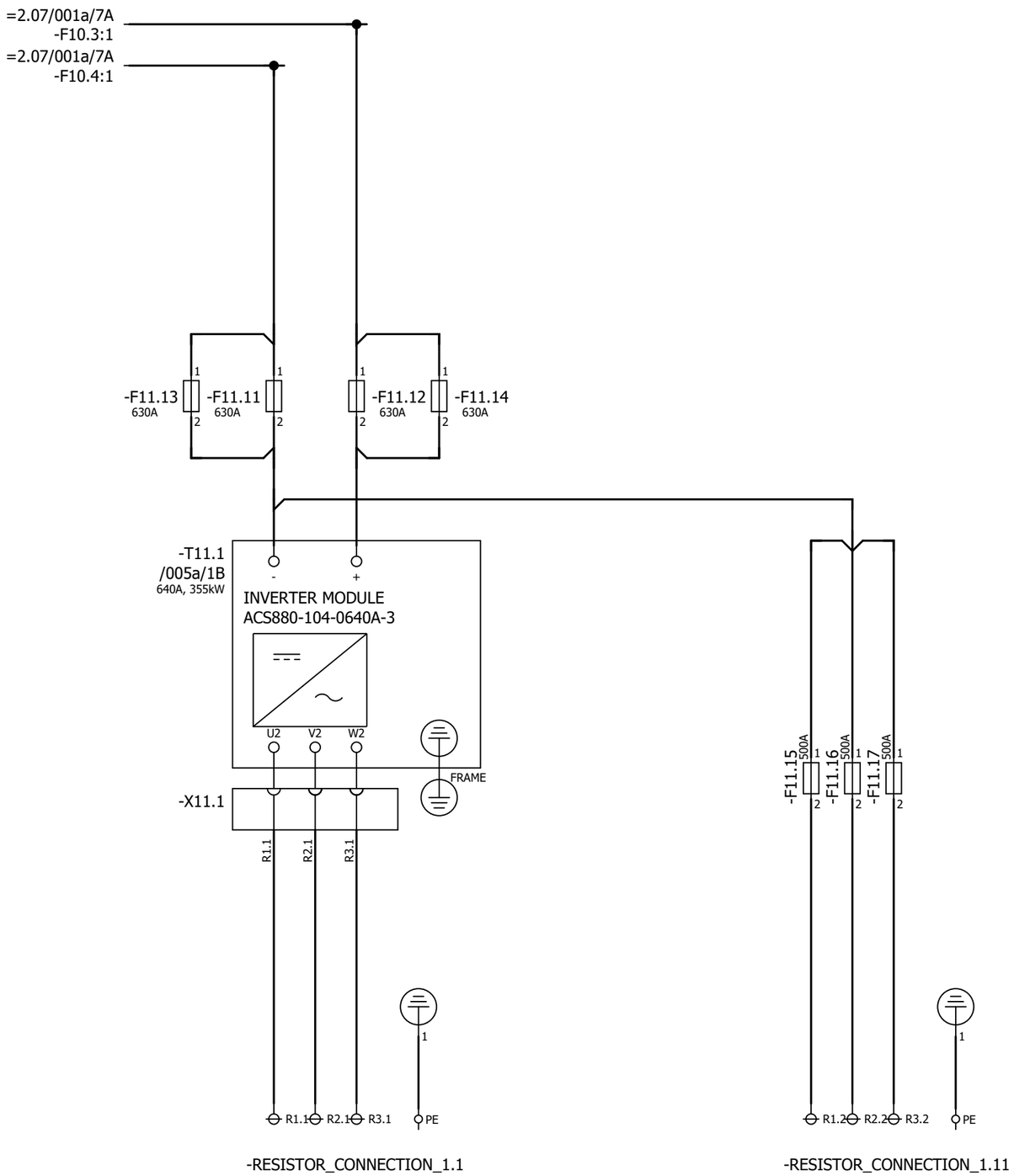

-RESISTOR_CONNECTION_1.1

-RESISTOR_CONNECTION_1.11

P345812 / 29711

Cust. Doc. No.	Prep. Sky-Xin Zhang 02.08.2023	Title MAIN CIRCUIT	Circuit diagram EFS2	Item Des.	
Cust. Ref. No.	App.	DBU	SAP Doc. No.	= 60	
Customer WMMP	Project Zhaka Jack-up Lift System	ACS880-607-0500-3	EPLAN Doc. No. 3ABDC230674 - 60	+ 60.1	
	Zhaka Jack-up Lift System-1	400V	ABB Ref. No.	Rev. .1	Sheet 001a
			Resp. Dept.	Cont.	005a

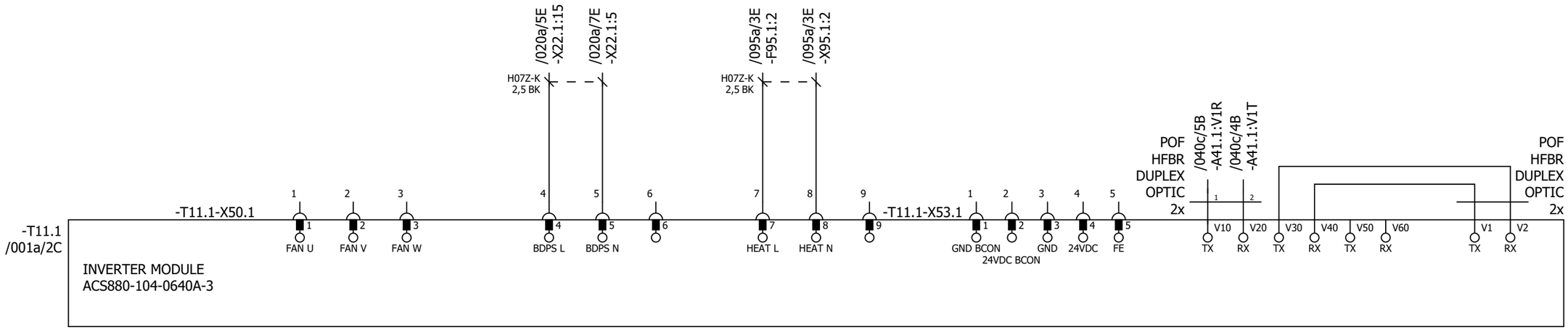

P345812 / 29711

Cust. Doc. No.	Prep. Sky-Xin Zhang 02.08.2023	Title INVERTER MODULES	Circuit diagram EFS2	Item Des.	
Cust. Ref. No.	App.	DBU	SAP Doc. No.	= 60	
Customer WMMP	Project Zhaka Jack-up Lift System	ACS880-607-0500-3	EPLAN Doc. No. 3ABDC230674 - 60	+ 60.1	
	Zhaka Jack-up Lift System-1	400V	ABB Ref. No.	Rev. .1	Sheet 005a
			Resp. Dept.	Cont.	020a

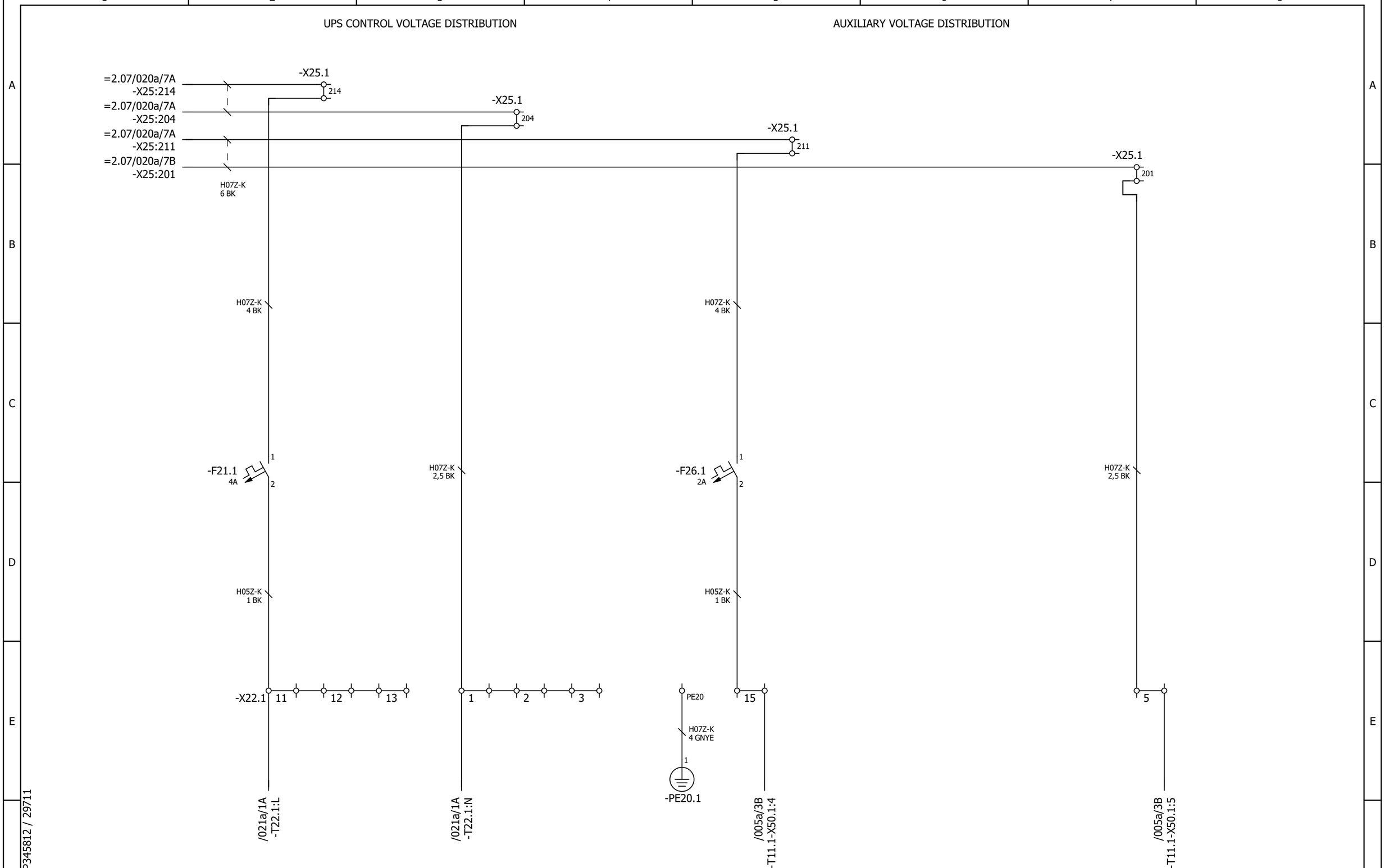

Cust. Doc. No.	Prep. Sky-Xin Zhang 02.08.2023	Title AUXILIARY VOLTAGE DISTRIBUTION	Circuit diagram EFS2	Item Des.	
Cust. Ref. No.	App.	DBU	SAP Doc. No.	= 60	
Customer WMMP	Project Zhaka Jack-up Lift System	ACS880-607-0500-3	EPLAN Doc. No. 3ABDC230674 - 60	+ 60.1	
	Zhaka Jack-up Lift System-1	400V	ABB Ref. No.	Rev. .1	Sheet 020a
			Resp. Dept.	Cont.	021a

24V CONTROL VOLTAGE DISTRIBUTION

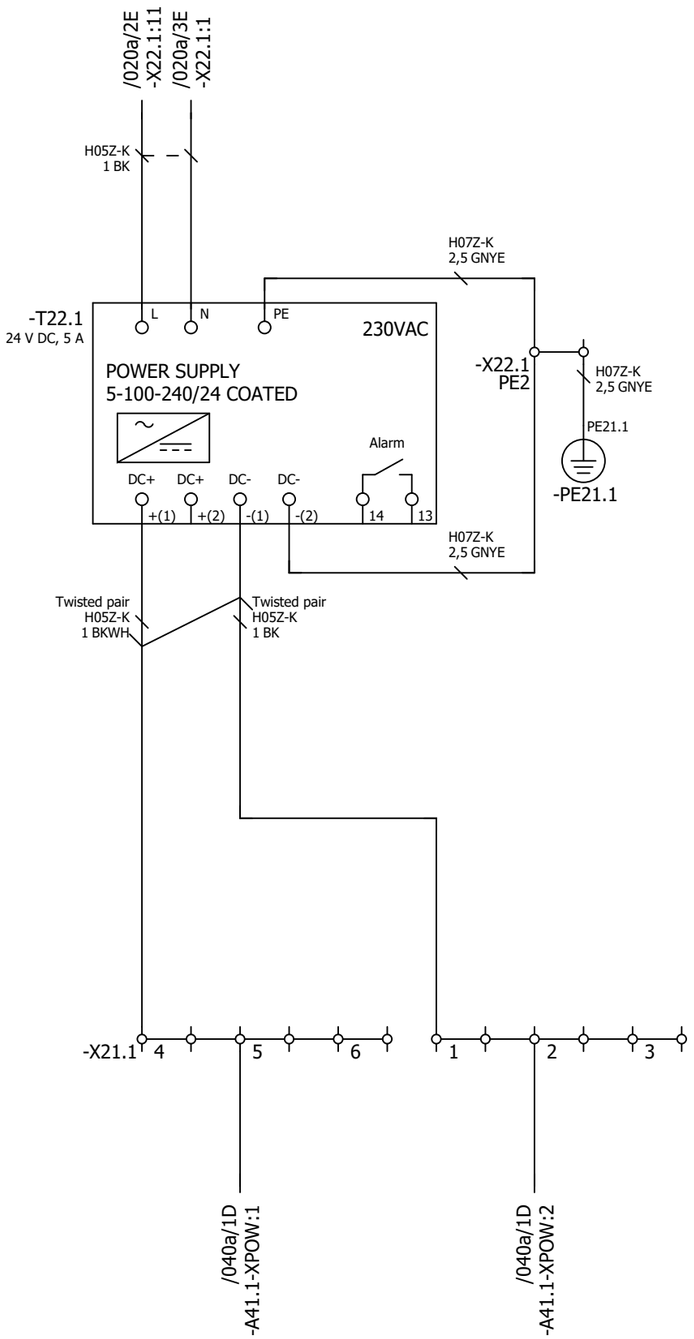

P345812 / 29711

Cust. Doc. No.	Prep. Sky-Xin Zhang 02.08.2023	Title AUXILIARY VOLTAGE DISTRIBUTION	Circuit diagram EFS2	Item Des.	
Cust. Ref. No.	App.	DBU	SAP Doc. No.	= 60	
Customer WMMP	Project Zhaka Jack-up Lift System	ACS880-607-0500-3	EPLAN Doc. No. 3ABDC230674 - 60	+ 60.1	
	Zhaka Jack-up Lift System-1	400V	ABB Ref. No.	Rev. .1	Sheet 021a
			Resp. Dept.	Cont.	040a

Control and status signals	Terminal	Pin
-A41 CHARGING CONTACTOR CONTROL	-XRO1	12
-A41 FAULT (-1) 1 - NO FAULT	-XRO2	22
-A41 MAIN BREAKER CONTROL	-XRO3	32

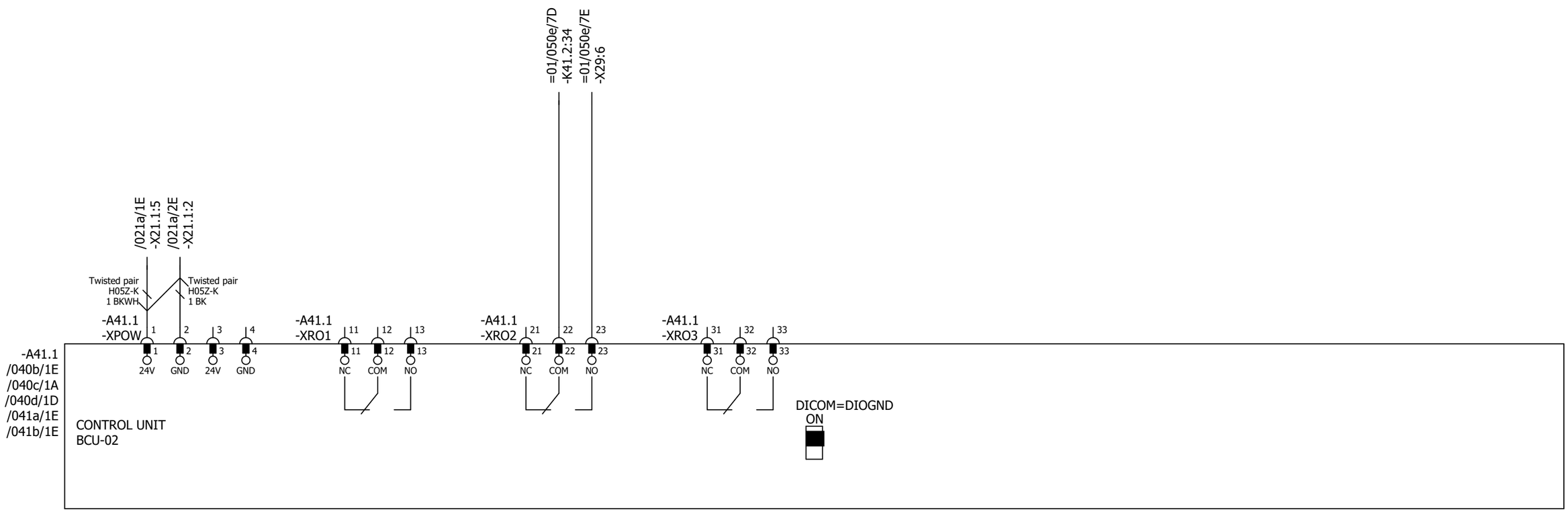

P345812 / 29711

Cust. Doc. No.	Prep. Sky-Xin Zhang 02.08.2023	Title CONTROL BOARD DBU ACS880-607-0500-3 400V	Circuit diagram EFS2
Cust. Ref. No.	App.		SAP Doc. No.
Customer WMMP	Project Zhaka Jack-up Lift System Zhaka Jack-up Lift System-1		EPLAN Doc. No. 3ABDC230674 - 60
			ABB Ref. No.
			Resp. Dept.

Item Des.
= 60
+ 60.1

Rev. .1 Sheet 040a
Cont. 040b

Control and status signals	Terminal	Pin
-A41 TEMPERATURE FAULT 0 - FAULT	-XDI	1
-A41 DI2 NOT IN USE	-XDI	2
-A41 DI3 NOT IN USE	-XDI	3
-A41 DI4 NOT IN USE	-XDI	4
-A41 DI5 NOT IN USE	-XDI	5
-A41 RESET 1 - RESET	-XDI	6
-A41 DIIL NOT IN USE	-XDI	7

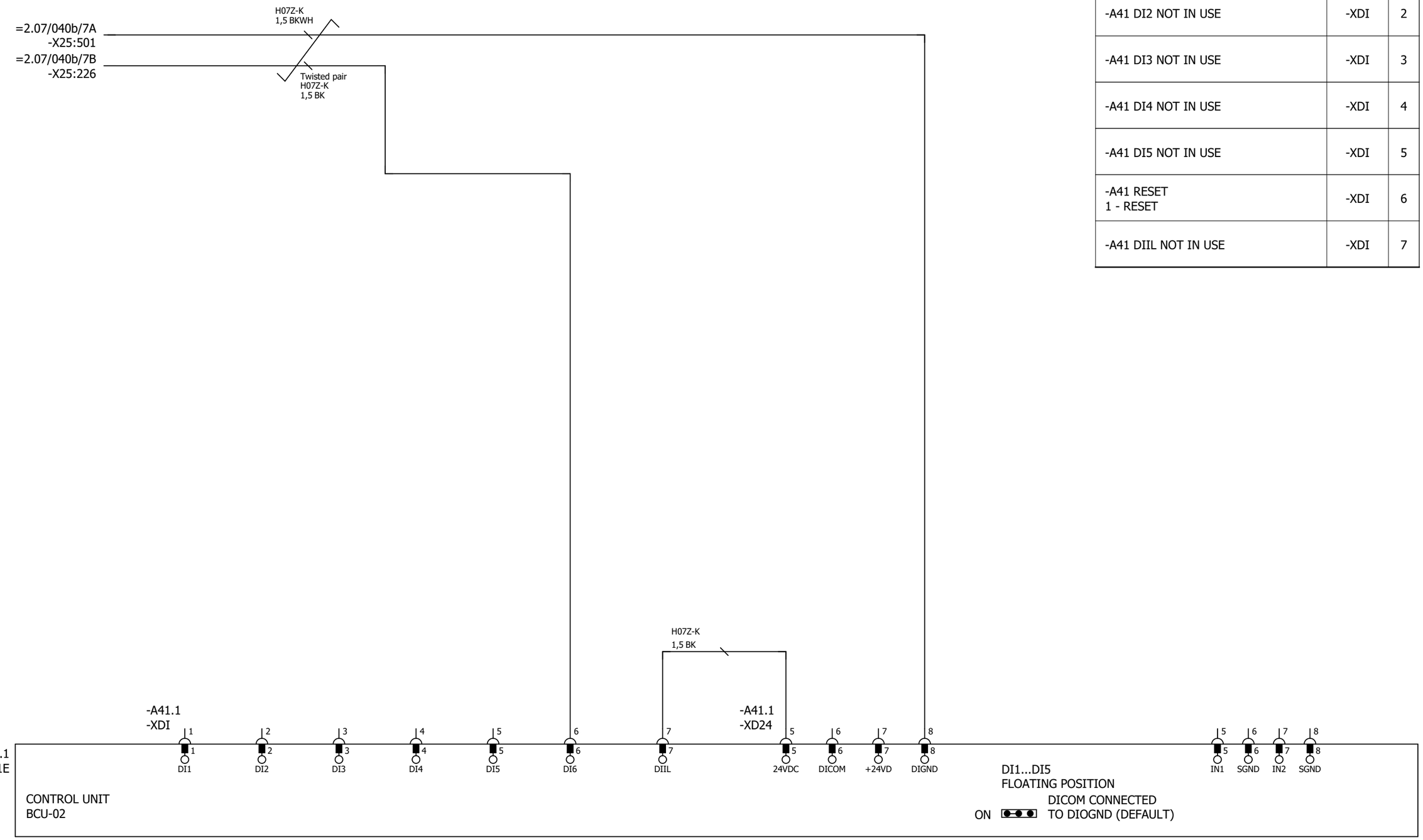

P345812 / 29711

Cust. Doc. No.	Prep. Sky-Xin Zhang 02.08.2023	Title CONTROL BOARD DBU ACS880-607-0500-3 400V	Circuit diagram EFS2
Cust. Ref. No.	App.		SAP Doc. No.
Customer WMMP	Project Zhaka Jack-up Lift System Zhaka Jack-up Lift System-1		EPLAN Doc. No. 3ABDC230674 - 60
			ABB Ref. No.
			Resp. Dept.

Item Des. = 60 + 60.1

Rev. .1 Sheet 040b

Cont. 040c

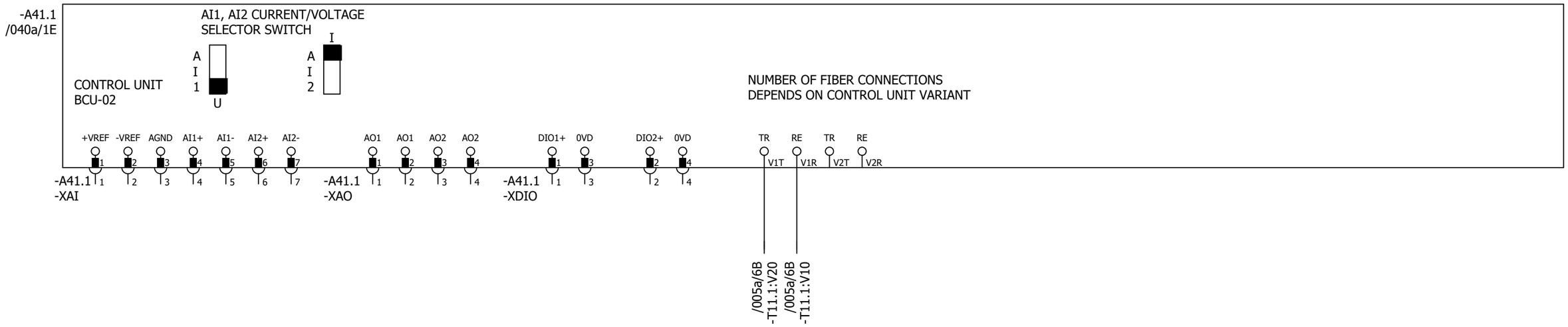

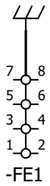

Control and status signals	Terminal	Pin
AI1 NOT IN USE 0(2)...10V	-XAI	4
AI2 NOT SPECIFIED BY DEFAULT NOT IN USE 0(4)...20mA	-XAI	6
AO1 NOT IN USE 0(4)...20mA RL < 500 ohm	-XAO	1
AO2 NOT IN USE 0(4)...20mA 0(4)...MOTOR CURRENT	-XAO	3
DI01 NOT IN USE	-XDIO	1
DI02 NOT IN USE	-XDIO	2

P345812 / 29711

Cust. Doc. No.	Prep. Sky-Xin Zhang 02.08.2023	Title CONTROL BOARD DBU ACS880-607-0500-3 400V	Circuit diagram EFS2
Cust. Ref. No.	App.		SAP Doc. No.
Customer WMMP	Project Zhaka Jack-up Lift System Zhaka Jack-up Lift System-1		EPLAN Doc. No. 3ABDC230674 - 60
			ABB Ref. No.
			Resp. Dept.

Item Des.
= 60
+ 60.1

Rev. .1 Sheet 040c
Cont. 040d

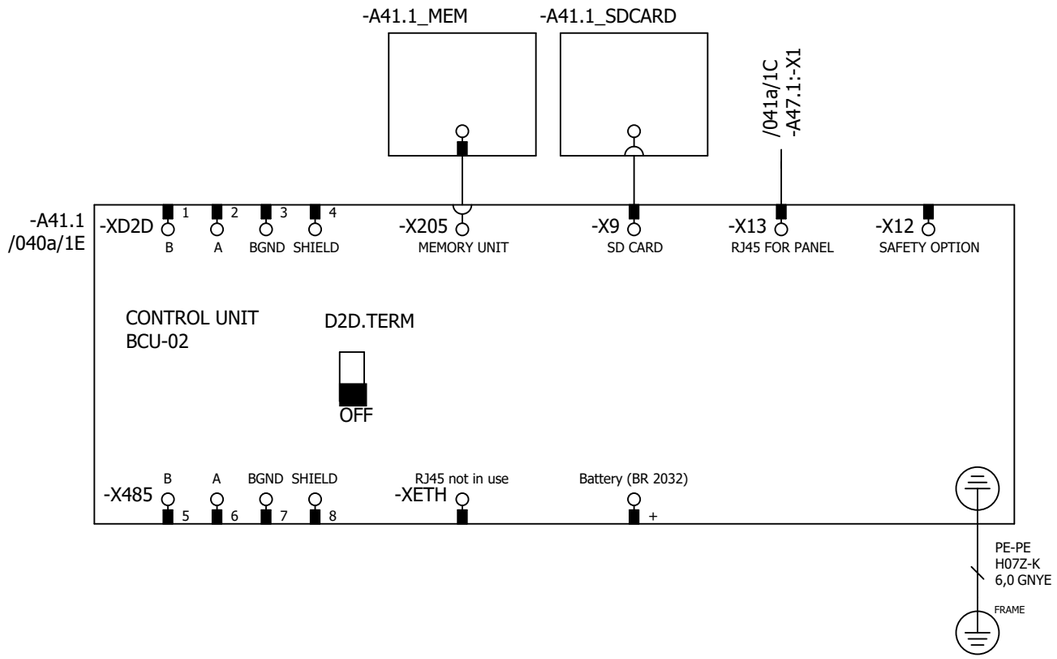

P345812 / 29711

Cust. Doc. No.	Prep. Sky-Xin Zhang 02.08.2023	Title CONTROL BOARD DBU ACS880-607-0500-3 400V	Circuit diagram EFS2	Item Des.	
Cust. Ref. No.	App.		SAP Doc. No.	= 60 + 60.1	
Customer WMMP	Project Zhaka Jack-up Lift System Zhaka Jack-up Lift System-1		EPLAN Doc. No. 3ABDC230674 - 60		
			ABB Ref. No.	Rev. .1	Sheet 040d
			Resp. Dept.	Cont.	041a

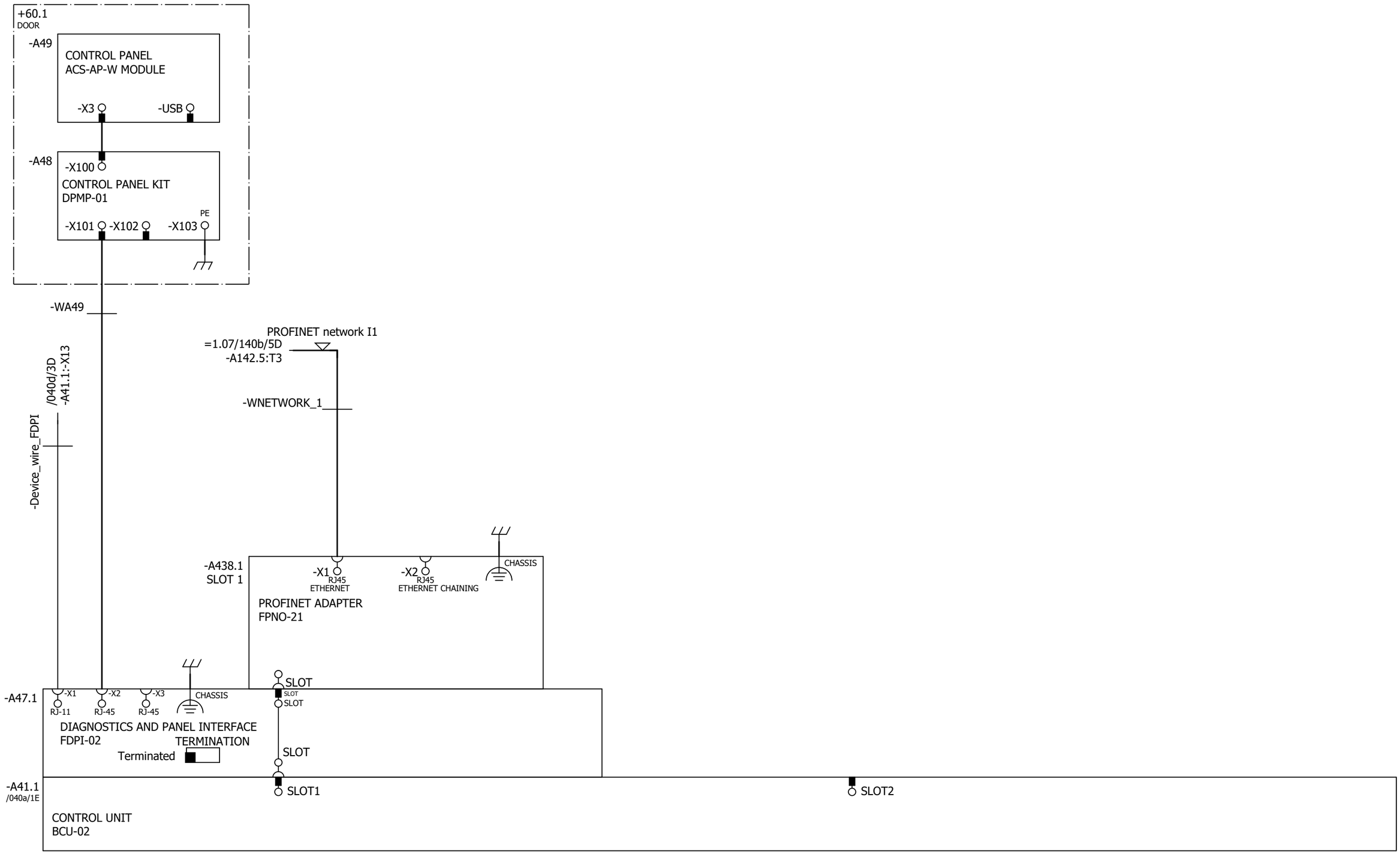

Cust. Doc. No.	Prep. Sky-Xin Zhang 02.08.2023	Title OPTION CARDS	Circuit diagram EFS2	Item Des.	
Cust. Ref. No.	App.	DBU	SAP Doc. No.	= 60	
Customer WMMP	Project Zhaka Jack-up Lift System	ACS880-607-0500-3	EPLAN Doc. No. 3ABDC230674 - 60	+ 60.1	
	Zhaka Jack-up Lift System-1	400V	ABB Ref. No.	Rev. .1	Sheet 041a
			Resp. Dept.	Cont.	041b

-A41.1
/040a/1E

SLOT3

SLOT4

CONTROL UNIT
BCU-02

P345812 / 29711

Cust. Doc. No.	Prep. Sky-Xin Zhang 02.08.2023	Title OPTION CARDS DBU ACS880-607-0500-3 400V	Circuit diagram EFS2
Cust. Ref. No.	App.		SAP Doc. No.
Customer WMMP	Project Zhaka Jack-up Lift System Zhaka Jack-up Lift System-1		EPLAN Doc. No. 3ABDC230674 - 60
			ABB Ref. No.
			Resp. Dept.

Item Des.
= 60
+ 60.1

Rev. .1 Sheet 041b
Cont. 095a

CABINET AND
MODULE HEATING

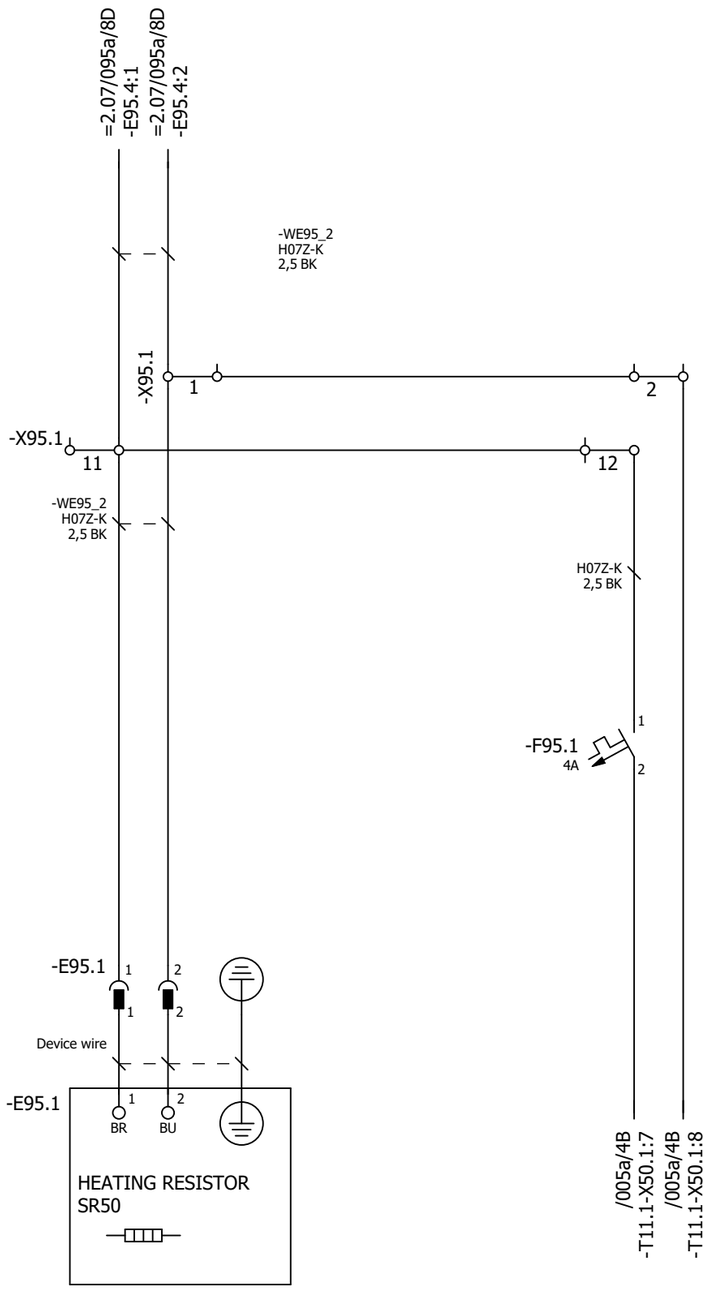

P345812 / 29711

Cust. Doc. No.	Prep. Sky-Xin Zhang 02.08.2023	Title CABINET HEATER	Circuit diagram EFS2
Cust. Ref. No.	App.	DBU	SAP Doc. No.
Customer WMMP	Project Zhaka Jack-up Lift System	ACS880-607-0500-3	EPLAN Doc. No. 3ABDC230674 - 60
	Zhaka Jack-up Lift System-1	400V	ABB Ref. No.
			Resp. Dept.

Item Des. = 60 + 60.1

Rev. .1 Sheet 095a

Cont. &MPC/Part list_1

Part list: 3ABDC230674BU02001

Item	Sort String	Qty.Str	Unit	Component Number	Description and text	Technical data
0010		1.000	ST		ACS880-607-0500-3+A012+B053+C121+C132+C	
0020		1.000	ST		_206+D150+E210+G300+G307+G315+G320+G330+	
0030		1.000	ST		_H352+H367+J400+K492+L509+P913	
0040		1.000	ST		=60	
0050		1.000	ST		+60.1,DBU1	
0060		1.000	ST		DBUMODULE	
0070	-T11.1	1.000	PC	3AUA0000129913-M	ACS880-104-0640A-3+C183+E205+P922	+C183+E205+P922
0080		1.000	ST		FUSES+DC	
0090	-F11.12	1.000	PC	3AFE68335418	HRC FUSE LINK 170M 6410	630A 690V
0100	-F11.14	1.000	PC	3AFE68335418	HRC FUSE LINK 170M 6410	630A 690V
0110		1.000	ST		FUSES-DC	
0120	-F11.11	1.000	PC	3AFE68335418	HRC FUSE LINK 170M 6410	630A 690V
0130	-F11.13	1.000	PC	3AFE68335418	HRC FUSE LINK 170M 6410	630A 690V
0140		1.000	ST		FUSES-DCRESISTORS	
0150	-F11.15	1.000	PC	3AUA0000136232	FUSE 170M6408	500 A;690 V
0160	-F11.16	1.000	PC	3AUA0000136232	FUSE 170M6408	500 A;690 V
0170	-F11.17	1.000	PC	3AUA0000136232	FUSE 170M6408	500 A;690 V
0180		1.000	ST		Auxvoltagedistribution	
0190	-F21.1	1.000	PC	3AFE68264758	PROTECTION SWITCH S 201-K4	4A, 440VAC/60VDC
0200	-F26.1	1.000	PC	3AFE68264651	PROTECTION SWITCH S 201-K2	S 201-K2
0210	-X22.1	1.000	PC	3AXD50000001632	TERMINAL BLOCK AS X22	12 AWG;2 mm2;24 A;800 V
0220	-X25.1	1.000	PC	3AXD50000001609	TERMINAL BLOCK AS X25 (1)	6 AWG;10 mm2;57 A;800 V
0230	-X25.1	1.000	PC	3ABD00609550	ASSEMBLY PLATE FOR X25 TERMINAL	acs880
0240		1.000	ST		24VDCdistribution	
0250	-T22.1	1.000	PC	3ABD00010542	POWER SUPPLY NDR-120-24	24V 5A
0260	-X21.1	1.000	PC	3AXD50000001633	TERMINAL BLOCK AS X21	12 AWG;2 mm2;24 A;800 V
0270		1.000	ST		CONTROLPANEL	
0280	-A47.1	1.000	PC	3AUA0000108650	FIELDBUS KIT FDPI-02	PANEL BUS ADAPTER
0290	-A48	1.000	PC	3AUA0000108878	CONTROL PANEL KIT DPMP-01	DPMP-01
0300	-A49	1.000	PC	3AXD50000025964	CONTROL PANEL ACS-AP-W MODULE	ASSISTANT PANEL WIRELESS CPU1
0310		1.000	ST		CONTROLUNIT	
0320	-A41.1	1.000	PC	3AUA0000110429	CONTROL UNIT BCU-02, MAIN ASSEMBLY	fiber optic links for 2 modules
0330	MEMORY	1.000	PC	3AXD50000006010	MEMORY UNIT KIT ZMU-02	

P345812 / 29711

Cust. Doc. No.	Prep.	Title PART LIST DBU ACS880-607-0500-3 400V	Item Des. = 60 +
Cust. Ref. No.	App.		SAP Doc. No.
Customer WMMP	Project Zhaka Jack-up Lift System Zhaka Jack-up Lift System-1		EPLAN Doc. No. 3ABDC230674 - 60
			ABB Ref. No. / Rev. / Sheet Part list_1
			Resp. Dept. / Cont. Part list_2

Part list: 3ABDC230674BU02001

Item	Sort String	Qty.Str	Unit	Component Number	Description and text	Technical data
0340	SCREW	1.000	PC	3AFE68681481	SCREW K30X10 TORX	PT WN1452 ZN
0350	SOFTWARE	1.000	PC	3AXD50000021336	SOFTWARE DBU CONTROL PROGRAM	ABCF2 for BCU-X2
0360		1.000	ST		Cabinetheaters	
0370	-E95.1	1.000	PC	3AFE09827498	HEATING EQUIPMENT SR50	HEATER 50W/220V(110-270VACDC)
0380	(-E95.1)	1.000	PC	3AUA0000066694	CONNECTOR SSL2.5 3043815	LOCKING ELEMENTS FOR ST-COMBI CONNECTOR
0390	(-E95.1)	1.000	PC	3AXD50000007033	CONNECTOR SC 2,5/ 2	2,50 mm2;24 A;500 V;2-POS. MALE
0400	(-E95.1)	1.000	PC	3AXD50000010133	ASSEMBLY PLATE HEATER	STEEL HDG 1,0;DEGREAS CLEAN
0410	(-E95.1)	1.000	PC	3AXD50000010509	ASSEMBLY DRAWING HEATER 50 AND 100W	
0420	-F95.1	1.000	PC	3AFE68264758	PROTECTION SWITCH S 201-K4	4A, 440VAC/60VDC
0430	-WE95_2	1.000	PC	3AXD50000010441	WIRE HARNESS SET_HP_E95_FRAME_V2	__ - E95
0440	-X95.1	1.000	PC	3AXD50000019251	TERMINAL BLOCK AS 600 V;28 A;4 mm2;12 AW	X95._
0450		1.000	ST		DBUMODULETERMINAL	
0460	-X50.1	1.000	PC	3AUA0000059813	CONNECTOR STV S 9 SB	9 POLES, 32A 500V 6KV/3 (FEMALE)
0470		1.000	ST		FIELDBUS	
0480	-A438.1	1.000	PC	3AXD50000192779	OPTION MODULE FPNO-21	PROFINET IO

P345812 / 29711

Cust. Doc. No.	Prep.	Title PART LIST DBU ACS880-607-0500-3 400V	Item Des. = 60 +
Cust. Ref. No.	App.		SAP Doc. No.
Customer WMMP	Project Zhaka Jack-up Lift System Zhaka Jack-up Lift System-1		EPLAN Doc. No. 3ABDC230674 - 60
			ABB Ref. No. / Rev. / Sheet Part list_2
			Resp. Dept. / Cont. &EMA/1

0422PTS28A-1-03-31400

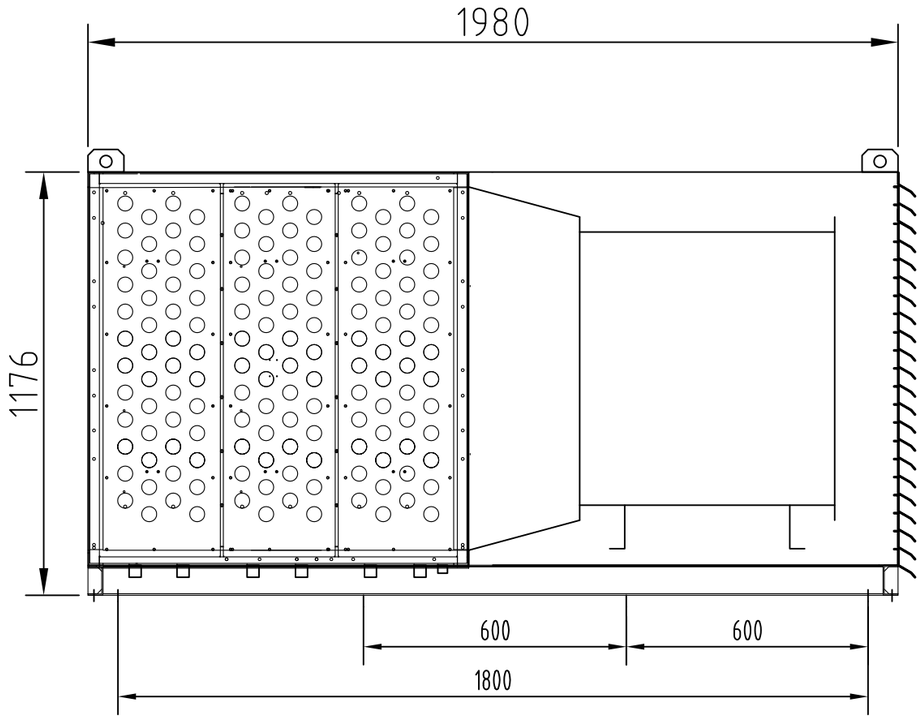

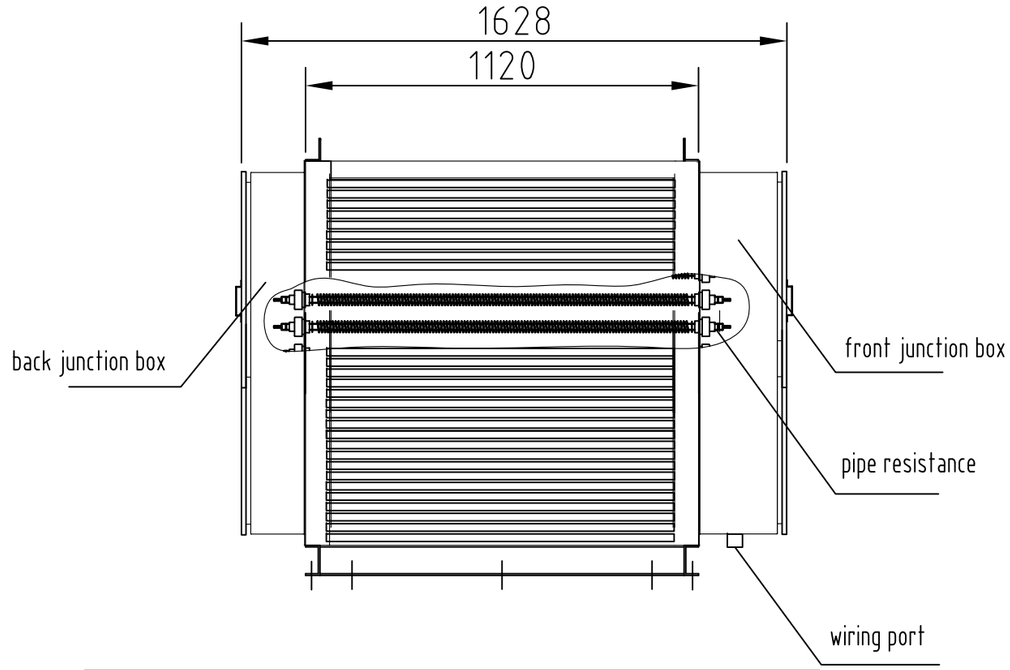

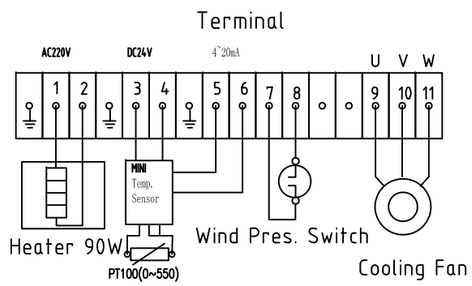

Protection degree：IP56, outside type
Environment Temperature: -15°C TO +50°C
Materual：S316 strainless steel
Cooling way：wind
Weight：720kg
Power: 6×40kw

设计	
校对	
审核	
设计艺	
校对准	
审核准	
工艺准	
标准准	
批准	

标记	数量	修改单号	签字	日期
设计				
校核				
审核				
标检				
审定				
批准				

1320T Electric Rack and Pinion Jacking System

Brake Resistance Cabinet

所属装配图号	0422PTS28A-1-03-00
图号	0422PTS28A-1-03-31400

标记	版本	重量	比例
S			1:20

共 1 页 第 1 页

武汉船用机械有限责任公司

Installation Specification

Offshore Hull Electric Jacking System

Electric Remote System

Abstract

The purpose of this installation specification is to supervise the fix of offshore hull electric jacking system's electrical remote control system component in installation site, environment and maintenance.

Shipyard should take charge of the equipment installation according to this guide and ensure normal function of the system.

Be sure this file hands out to every relevant department.

General

Please take the installation, use and maintenance space of electrical system's components into account when assembling and designing.

Arrival check

Open boxes and check immediately when goods arrive, and inform the manufactory as soon as possible if finding problems.

Maintenance of electric control equipment

—Storage

Equipments should be stored in dry and homoeothermic place, preventing humidity, condensation, breakage and dust.

Equipment must be preserved correctly.

—Installation period

When the equipments are installed the power cannot turn on. Cable should fix as late as possible, and power connection is at last. Control cabinet should be sealed (door shut, sealing gland close), preventing impurity entering into the cabinet. Ensure dust cannot enter into control box and push button contact on the panel when paint around. Cover equipment well when painting around. Should carry out special

protection if mechanical damage risk exists, preventing breakage to equipments.

After installation and before starting, each unit should be checked and cleaned carefully.

—Power Supply

Power source of control system is single-phase alternating current 220V±10%, 50Hz. Power source must take from high priority network to make sure system free from hurt. If power source takes from two feedback current devices, the devices must be connected to an auto switch.

Power source of variable frequency drive cabinet is AC 400 V±10%，50Hz. Every leg has 14 sets of motors. there are 56 sets of motors in four legs. And the rated power of each motor is 30KW, and the source also provides power to other devices as brakes. Power source should be taken from high priority network and the capacity must fulfill motor using request to make sure system is free from any damage.
The phase shifer transformer has a primary supply of AC 690V±10%，50Hz, and a secondary supply of 400V , 50HZ.The power supply for pre-magnetized transformer is AC 690V±10%，50Hz.Each leg has a phase shifting transformer and a responsible for feeding the phase shifting transformer to ensure the system normal work.

Don't turn on the power before our service engineer checked

Control cabinet

Central control station (IP22) of remote control system is placed on jacking control room, the maximal environment temperature is 45℃ and the maximal moisture allowance value (without condensation) is 100%.

Other control units as leg control unit, pre-magnetizing transformer, phase-shifting transformer, variable frequency source cabinet, are installed in air-conditioner room around the jacking legs under the hull main deck. It needs the maximal temperature in the air-conditioner room is 40℃ with no gel, no corrosion and no drip. All the control unit cabinets should be vertical installed. Shipyard designs base and installs. The base should be fixed by anchor bolt or other way to ensure all the cabinets have no loose and incline in the normal using.

The cabinets which air flows up-and-down, such as variable frequency source cabinet. The bottom of the cabinets should keep some distance (more than 80mm). The installed base and installed surface are hollow to ensure air can enter from the bottom. And the top of the cabinets must keep more than 400mm distance from the top of cabin, it forbid taking the space between the top of the cabinets and the top of cabin to make sure the airflow came from the cabinets can be cycle. If the airflow is jammed, it will influence the normal using of the equipment, the maximal using temperature of the air isn’t over 40℃.

The other control unit cabinets which have air device installed in other parts, such as intake and fan in the back of the cabinets, the cabinets must keep distance from the wall when they are installed to ensure normal draught. The cabinets installed in the same cabin must keep distance from each other to forbid interfere. And the cabinets maintained from the back must set the pit lane.

All control units of remote control system shouldn't be fixed in the place where there is radio transmitter, wireless aerial or high intensity signal field or disturbing electronic equipment, for example, transmitter booth.

Each unit of electrical control system should have good earthling with hull, and must achieve the following points:

- Metal surface descale, remove cover layer, attach hull with screwed connection.
- Earth wire should be short as possible as you can if connecting earth wire with hull, and adopt multi-core conductor
- Two terminal of earth wire are manufactured to terminals with cable post, and fixed to cabinet body and ship body firm.

Installation position of each component of electrical control system must make sure the door of cabinet can open up to 90 degree.

Center unit should be fixed in the place where the vibration is least. It should install vibration reduction components when exceeding the scope of IEC60068-2-6 standard and if there is dangerous vibration.

Electrical cable

Marine cable in the cabling diagram doesn't be supplied by WMMP. Reference specification of connecting cable of electric control system is indicated in system diagram and cable connection drawing. All of the cable must satisfy marine demand and practical classification society's rule. The cables of alternating current source are using shielded cable to reduce interfere to other electrical equipments. Using cable must consider voltage drop caused by the length of cable and the type of source. It must satisfy practical classification society's rule.

The source cable of variable frequency source cabinets should satisfy thefollowing demands:

- 3-core tinned solid copper wires with XLPE insulation;
- Copper braided or aluminium foil mixing shielded and tinned solid wires;PVC bushing;
- The insulation thickness must be equal to or more than 15mil (0.4mm/0.015inch);
- Concentricity of wires and insulation part. Quality of wires must have no difference.

Physical relation among each lead is importance to frequency converter installation. There is no fix relation among each wire in the wire tube or cable channel. The cable which is fixed geometrical shape is better than loosen cable. It can reduce cross coupling noise and insulation stress. So the cable of variable frequency source cabinet must be fixed in order.

The cable connected sensors and encodes is copper shielded wire at best, insulation degree is 300V or more. The analog signals must be separate from the source wire; the distance is 0.3m at least. Encode cable must be placed in separate tube. If the signal cables and the source cables are crossed it must be crossed in the right-angle.

Different voltage class signal cable should lie down separately in order to avoid disturbance. The 110V or even high voltage hierarchical cable or the cable that can produce high EMI signal can't lay down with remote control system's signal cable. In order to avoid disturbance, different voltage class signal cable should be laid down separately. The 110v or even High Voltage hierarchical cable which has high electro-magnetic interference should be laid down with signal cable separately.

Cable section indicated in the cabling diagram is minimum value, and all of the cables are marine cable which should meet relevant rules. The rules should be according to standards. All cables should avoid splice.

Cable fixer should be fixed to prevent cable from mechanical damage. Connection between each unit should adopt shield cable, and effective surface of shield layer isn't below 85%.With regard to single-layer shield cable, two terminal shield layer of the cable should be connected to hull at least. Its two terminal external shield layer should be connected to hull (Faraday shield) if it is double shield cable, and internal shield layer should be connected to the end of hull control unit with the shortest method.

The cable cannot be laid at will. The cable must put in the channel. The power cable of control units, such as variable frequency source cabinet, must be bundled in the channel. The cable between different equipments must keep distance. The distance of control cable and power cable on the same equipment is 0.3m at least.

Internet cable must be separated with other cables.

Ethernet cable must satisfy the following demands (20℃):

- Standard 8-core industrial shielded marine Ethernet cable;
- Characteristic impedance 100Ω;
- Attenuation 6db/100m when it is 10MHz;
- Attenuation 22db/100m when it is 100MHz;
- Coupling resistance: ≤10mΩ/m when it is 10MHz;
- Loop resistance: ≤120mΩ/km;
- Insulation resistance: ⩾500MΩ/km;
- Bus cable connector: industrial shielded RJ-45 connector.

Ethernet cable connector RJ45 must satisfy IP67 standard and be apply to using condition, the cable also must satisfy TIA/EIA standard when it is industrial temperature.

Ethernet bus cable connected to equipment must follow the picture;

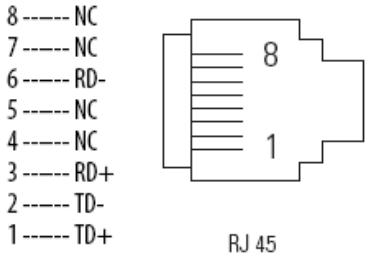

Fiber must satisfy the following demands:

- 62.5/125μm or 50/125μm multimode glass fiber;
- Wavelength 1310nm;

- Graded index fiber;
- Simplex or duplex;
- IEC 60794-1-1、IEC 60793-2-10 A1.

The optical cable connection of each cabinet body includes the optical cable and accessories. The accessory contents include: optical fiber junction box, optical fiber connector and optical fiber jumper; among them, the optical fiber jumper has two ends ,of which the connector with the lifting system is an ST connector, and the other end just needs to match the optical fiber junction box.

The maximal allow length of fiber is 1KM.

Note: The above optical fiber and accessories are not provided by WMMP.

Installation of Electrical variable frequency source cabinet

The Installation and wiring of the electrical variable frequency source cabinet are detailed in the variable frequency cabinet part of the "Outfitting Instruction Manual".

Installation of phase-shifting transformer

Both the phase-shifting transformers and braking resistor cabinets are cooled by force air cooling. Therefore, the phase-shifting transformers are installed in the platform cabin and should not be too far from the variable frequency dive cabinet. The distance is preferably less than 100 meters to facilitate on-site wiring and reduce the influence on the equipment performance due to cable voltage drop and impedance.

The braking resistor cabinets have a large heat dissipation and can be placed outdoors or in a well-ventilated cabin. The protection level of the wiring part of the braking resistor cabinets is IP56.

Motor Connection

The cable connected to motors must be marine three-phase shielded variable frequency cable. The rated voltage is 380V, the rated current is 46A, and all cables must satisfy the demand of voltage and current. Cable must be connected correctly to motors according to the cable connection drawing, and make sure the three stages of motor are correct.

The number of motors follows the above; ensure the correct connection from motors to frequency converters.

All cables must be fixed in the jacking house by ribbon. The length of cable between motor and frequency converter is forbidden over the allow value, or it will influence frequency converter normal control motor.

Installation and Connection of Absolute Encoder

Please choose flexible coupling when absolute encoders are installed. Flexible coupling can make sure encoder normal working under the condition the installation angle has error and encoder axis and mechanical axis are different. If don't choose

flexible coupling, the connection of encoder axis and mechanical axis is too tight, it will cause failure.

Attention when absolute encoders are installed: connecting encoder and mechanical axis by flexible coupling (don't too tight), encoder must be fixed on panel by screw (don't screw down too tight), and then adjust encoder to make sure encoder axis and mechanical axis are coaxial. And screw down the screw and flexible coupling.

Three groups connectors are set on the back of absolute encoder, one group is power connectors, two groups are data communication connectors. Please connect encoder according to the demands, wrong connection may cause the damage of encoder.

The power connectors of absolute encoder are: 1-Vs(brown, 10-30V DC), 2-(white, no use), 3-GND(blue, earthing), 4-(black, no use).

The data communication connectors of absolute encoder are: 1-TXD+(white orange), 2-RXD+(white green), 3-TXD-(orange), 4-RXD-(green).

To ensure normal using, the shell is connected to the earth at best.

Connection between Each Unit of the System

The cable of each control unit comes from the cabinet's bottom, namely, cable shield can be connected to each unit well. The cable shield should be well ground.

In order to move the panel and don't disconnect the cable when maintaining, the connection cable closed to the control panel should have plenty of length.

Cable socket must be stripped carefully, conductor core is without damage, all of insulating material is removed, and the terminal screws must be fastened. Connection of cable should adopt cable joint as possible, if not, cable core should carefully, making sure no contact between terminals, which could avoid the short circuit. It must check the fastening screws before delivery.

Control

Each control unit is fixed in hanging style.

The electrical devices installed inside, protection degree is IP22 or more.

The electrical devices installed outside, protection degree is IP56.

船　东：
SHIP OWNER：　PEGASUS FIRST HOLDINGS LIMITED
船　厂：
SHIPYARD：　QingDao Haixi Heavy Duty Machinery Co.Ltd
船　号：
HULL NO：　HX2330/HX2331
船　型：
SHIPTYPE：　TYPE-3 Self-Elevating Unit
船　级：
RULE：　ABS
工程编号：
PROJECT NO：　平台升 28A-1/-2

电动齿轮齿条升降系统

ELECTRIC RACK AND PINION JACKING SYSTEM

使用维护手册

OPERATION AND MAINTENANCE MANUAL

					Electric rack and pinion jacking system	资料编号	HJ/Y-PTS28-1-S-WHSC
标记	数量	修改单号	签字	日期	使用维护手册 Operation and maintenance manual	标　记	版　本
设　计						S	
校　核							
审　核							
审　定							
会　签							
批　准						武汉船用机械有限责任公司 WMMP WUHAN MARINE MACHINERY PLANT CO., LTD.	
军代表							

序言 General

本手册对于电动齿轮齿条升降系统的操作使用和日常维护方面给予指导。并规定了用户在维护和使用升降系统时必须遵守的安全须知。如果不加注意，将可能造成意外人身伤害和死亡或损坏设备。在试图操作和使用升降系统前，请务必阅读本说明书内容。

This manual gives guidance for the operation and daily maintenance of electric jacking system. In addition, it specifies rules which the users must comply with. If you pay no attention to it, it's likely to cause accidental injury even death or equipment damage. Before try to use jacking system, please read this manual.

警告 Caution

本说明书将重要、紧急、危险因素区分为以下三个符号:

This instruction book distinguishes important, emergent, dangerous factors as the following three symbols:

注意！ ATTENTION!	注意文字用来强调和指出操作和维修所应注意的信息。 Attention that the text used to emphasize and point out the operation and maintenance should be noted that information.
小心！ CAUTION!	小心文字用来指出应注意可能引起设备损坏或主操作故障的原因。当小心标记出现时，必须遵循以后的指令。 The CAUTION is to point out the reason may cause equipment damage or main operation fault. When the mark appears, you must obey the following instructions.
警告！ WARNING!	警告文字用来指出可能引起人身安全或严重操作故障的情形。当警告标记出现时，必须特别小心地服从文字中的指令。 The WARNING is to point out the situation may cause personal security or serious operation fault. When the warning sign appears, you must be especially careful to obey the instructions in the text.

版权声明 Copyright Statement

本手册所属的著作权为武汉船用机械有限责任公司所有，文件使用方未经允许，不得私自扫描留存、复印，不得传阅给第三方以及其他无关人员等。

The copyright of this manual is owned by Wuhan Marine Machinery Co., LTD. Without permission, the document user shall not scan, retain, copy, and shall not circulate to a third party or other irrelevant personnel.

使用维护说明 OPERATION AND MAINTENANCE MANUAL

使用维护说明约定：

The stipulation of operation and maintenance manual:

1、本手册仅对电动升降系统的操作维护进行说明，海洋平台各工况下的升降流程不属于本手册范围内。

1、This manual just explains the operation and maintenance of electric jacking system, the process of rising and descending offshore platform in each condition is not included in this manual.

2、在全部阅读并充分理解本操作维护手册的前提下，依据《海洋平台操作指南》进行平台升降流程操作。

2、After totally reading and fully understanding the operation and maintenance manual, operate the rising and descending process according to Offshore Platform Operation Instruction.

3、本手册专门为海洋平台(该电动升降系统配套平台)主管人员编制，我们很高兴能够对其进行操作使用方面的培训，并充分告知应予重视的安全事项；

3、This manual is compiled for the managers of offshore platform. We're glad to train you on the operation and usage of platform, and adequately introduce the security items which should be taken care of.

4、该部分逐章对性能、操作、维护等进行说明，请您充分保证该手册的完整性，以便于您随时可以查阅。

4. The manual explains the performance, operation and maintenance of the electric jacking system. Please ensure the integrality of the manual in order to be consulted at any moment.

安全注意事项 Safety attention

在操作控制系统之前，请仔细阅读安全注意事项。

Before operating the control system, please read the safety precautions carefully.

注意！

Attention！

1、只有经过培训的人员才能操作电动升降系统的遥控系统。

1、Only trained personnel are permitted to operate the remote control system of electric jacking system.

2、在电动升降系统开始操作前，确保您熟悉应急系统。

2、Before the commencement of operation of the electric jacking system to ensure you are familiar with the emergency system.

3、在操作前确认紧急停止和备份控制系统工作正常

3、Confirm that emergency stop and the backup system is working properly before operation.

4、操作前务必学习本手册并了解控制系统。

4、Make sure to have studied this manual and understood the control system before operation.

CONTENT

1. 概述 General 876
1.1 前言 Preface 876
1.2 保修 Guarantee 877
1.3 安全注意 Safety 877
2. 电动升降系统 Electric Jacking System 884
2.1 设备概述 Equipments overview 884
2.1.1 电动升降系统介绍 Electric jacking system introduction 884
2.1.2 使用环境 Service environment 888
2.1.3 设备参数 Equipments parameters 889
2.2 机械部分 Mechanical Part 890
2.2.1 主要组成 Major Component 890
2.2.2 安装架 Jackcase 891
2.2.3 升降单元 Jacking Unit 892
2.2.4 锁紧楔块组件 Subassembly of locking wedge 896
2.2.5 编码器组件 Travel Sensor Components 898
2.3 自动润滑系统 Automatic lubrication system 899
2.3.1 系统原理 System principle 899
2.4 电气系统 Electric System 901
2.4.1 集中控制台 Central control station 903
2.4.2 上面板 The upper panel 907
2.4.3 中面板 The middle panel 907
2.4.4 机旁控制箱 Local control box 912
2.4.5 桩腿控制单元 Leg control unit 916
2.4.6 移相变压器 phase-shifting transformer 918
2.4.7 制动电阻柜 Brake resistor cabinet 919
2.4.8 变频电源柜 The VFD Cabinet 920
2.4.9 触摸屏 Touch screen 922
2.4.10 主界面 Home 923
2.4.11 桩腿界面 Leg Window 923
2.4.12 电机转矩调整 Retorque 925
2.4.13 控制条件 The Control Condition 927
2.4.14 重载问询 Heavy Request 928

2.4.15 故障越控 Bypass function 929
2.4.16 set interface....932
2.4.17 制动电阻风机强制运行 Brake Resistor Fan Force Running 934
2.4.18 历史记录 Data History....935
2.4.19 lubrication system....936
2.4.20 I/O 状态 I/O state 937
2.4.21 网络通信 Network communication 938
2.4.22 预压载 Preload....939
3 操作说明 Operation Description 942
3.1 动机前检查 Pre-motivation check....943
3.1.1 作业环境检查确认 Job environment check confirmation....943
3.1.2 机械系统检查 Mechanical system inspection 943
3.1.3 自动润滑系统检查 Automatic lubrication system check and preparatory work....944
3.1.4 电气系统检查和准备工作 Electrical system check and preparatory work....945
3.2 升降操作 Jacking Operation....947
3.2.1 运行前的准备操作 Preparation before running 947
3.2.2 集中控制 Central control 948
3.2.3 机旁控制 Local operation....967
3.3 系统停机 system down....971
3.3.1 临时停机 temporary short stop 971
3.3.2 长时间停机 long stop 972
3.3.3 紧急停机 emergency stop 973
3.4 系统保持 system hold status....973
3.5 报警处理 Alarm failure 973
3.6 故障处理 Fault process....980
3.6.1 倾角传感器故障 Angel sensor fault 980
3.6.2 变频器/电机/电磁制动器故障 Inverter/motor/electromagnetic brake failure 981
3.6.3 制动电阻故障 Brake resistance fault....983
3.6.4 绝对值编码器故障 Absolute encoder fault 983
3.6.5 制动器磨损 Brake wear....984
3.6.6 绝缘故障 Insulation fault....985
3.6.7 升降装置超负载情况 jacking device overload condition 985
4 检查与维修 Check and Maintenance 987

4.1 系统及主要零部件 987
4.1.1 齿轮箱油位及供油情况 Oil level in the gearbox and oil supply and oil drain 988
4.1.2 齿轮箱漏油 Oil leakage of gearbox 989
4.1.3 更换齿轮箱润滑油 Renew lubricant of gearbox 991
4.1.4 检查螺栓是否松动 Check loose bolt 993
4.1.5 齿条啮合齿面 Rack and pinion engagement face 995
4.1.6 润滑齿轮箱和齿条 Lubricate the gearbox and rack 995
4.2 机械部件检查 Inspection of mechanical parts 996
4.2.1 楔块贴合检查及处理 Inspection and handling of wedge block fitment 998
4.2.2 啮合齿磨损量检查及修复 Inspection and repair of wear on meshing teeth 999
4.3 液压易损、消耗件检查 Hydraulic wear and tear、consumable parts inspection 1001
4.4 电气元器件检查 Electrical component inspection 1002
4.4.1 电气符号说明 Electrical symbol specification 1002
4.4.2 电器设备通用保养要求 General maintenance requirements for electrical equipment 1003
4.4.3 PLC 模块的检查与更换 Check and replace PLC module 1007
4.4.4 CPU 指示灯 Lamp 1014
4.4.5 绝对值编码器指示灯 Absolute value encoder lamp 1017
4.5 润滑专项检查 Lubrication Special Inspection 1018
4.5.1 齿条润滑脂检查及更换 Gear rack grease inspection and replacement 1020
4.5.2 齿轮箱轴承润滑 Gearbox bearing lubrication 1021
4.6 紧固专项检查 Special inspection of fastening 1022
4.7 定期更换零件项目 Regular replacement parts project 1024
4.8 自动润滑系统点检项 Automatic lubrication system check item 1025
5 售后服务 After-sales Service 1027
5.1 如何购买备件 How to purchase spare parts 1027
5.2 如何申请售后服务 How to apply for after-sales service 1028
Appendix1.附录 1.齿轮箱的拆装说明 Gearbox disassembly and assembly specification . 1030
Appendix2.附录 2.油料清单 List of oil 1038
Appendix3.附录 3.电机及制动器维护手册 Maintence manual for motors and brakes 1039
Appendix4.附录 4.齿轮箱维护手册 Gearbox maintence manual 1040

1. 概述 General

1.1 前言 Preface

非常感谢贵方购买和使用 WMMP 海洋平台电动升降系统。

Thank you very much for purchasing and using WMMP electric jacking system of offshore platform.

为保证 WMMP 海洋平台电动升降系统的安全、无故障操作，本手册介绍了电动升降系统入门须知。请在全部阅读并充分理解本手册的前提下，依据《海洋平台操作指南》进行平台升降流程操作。

To ensure the safe and failure-free operation of WMMP electric jacking system of offshore platform, this manual introduces the introductory notes of electric jacking system. Please operating the platform according the Offshore platform operation guide after read whole the manual and understand adequately.

如果您希望提高您作业的安全及效率，我们建议您保持电动升降系统处于最佳保养状态。要做到这一点，必须完全掌握电动升降系统的性能及特点，必须遵守长期维修保养计划。

If you want to enhance the safety and increase the efficiency of operation, we suggest you take best care of the electric jacking system. To do this, adequately understanding the performance and characteristic and abiding by the long-term maintenance plan is needed.

为此目的，请仔细阅读本手册及其相关的完工图，并完全弄懂其内容是十分重要的。同时也必须对工作人员进行电动升降系统的实际操作及维修培训，这样才能使工作人员熟练自如地操作电动升降系统。

For this purpose, it’s very important to carefully read this manual and relative finishing drawings and adequately understand the content. Meanwhile, it’s needed to train the operators on electric jacking system operating and maintaining.

如果认真执行预定的维修计划，定期保养和检修，可以避免操作错误和故障。

If executing the scheduled maintain plan seriously, do regular maintenance and repair, the operating error and stoppage can be avoided.

请注意，一旦出现故障不仅要花一大笔修理费，从而在许多相关人员中造成不良影响。而为了挽回因出现故障而造成的信誉损失，则必将耗费更为巨大的资金。

Attention please, Once the stoppage happened, it will cost a large amount of money and make a bad influence among the relative person. To redeem the reputation loss because of

stoppage will cost more substantial capital.

1.2 保修 Guarantee

WMMP 海洋平台电动升降系统是在严格的质量控制下制造的，在出厂前经过了所有必要的试验和检验。如果在规定的时间内，任何零件性能不良或有故障，而不良性能和故障明显是因我方差错造成，我方负责保修和更换该零件。但是，因为下述任何原因所引起的故障，我方概不负责：

The WMMP offshore platform electric jacking system was established under strict quality control, and left factory after all the necessary test and inspection. Within the fixed time, any part's performance come to bad or stoppage occur we will take the responsibility for maintaining and changing the part if it was caused by our mistake. But we shall not take the responsibility if the stoppage was caused by any of the following reason:

负荷超过了完工图内所规定的极限。

The load extend the limit confirmed by finishing drawing.

操作、管理、控制方法不当。

The method to operating, managing and controlling is wrong.

在未取得我方同意下，自行拆卸或调试电机、齿轮箱、制动器、行程传感器、控制装置或更换其零件、材料。

Didn't get our agreement and uninstalled or adjusted motor, gearbox, brake, subassembly of travel sensor and control equipments, or replaced their part or material.

选用了不合适或变质的润滑油或润滑脂。

Used inappropriate or degenerative hydraulic oil or lubricating oil.

违反使用维护手册规定的操作。

Used the operation which violated the maintenance manual.

请务必仔细通读本手册，如有不理解的地方，请与我公司售后联系，以便得到解释和建议。

Please carefully read this manual, and contact our department of server for explanation and suggestion if there is any place you can't understand.

1.3 安全注意 Safety

本手册中各处都标有下述旁注，清楚地表示和区分了“由于操作疏忽、装卸或维修不当而发生偶然事故时可能造成的危险范围。

The following sidenotes can be found anywhere in this manual, they clearly indicate and

class the degree of danger which is caused by careless operation, inappropriate assembling and unassembling or repairing.

根据危险程度，使用维护手册将其分为三个主要警告级别，具体情况说明如下：
According the degree of danger, the maintenance manual classify it to three major warning class, the particular instance is shown as followings：

事故可能造成人员伤亡或污染。The accident may cause death or population.

事故可能造成人身伤害或设备损坏。The accident may cause people hurt or equipment breakage.

事故可能造成设备性能降低。The accident may cause the reducing of equipment performance.

必须集中精力阅读标有

、 、 字段落，按照说明正确操作电动升降系统，随时警惕可能发生的故障、事故和电动升降系统本身运转中可能发生的危险。

Concentrate attention to read the paragraphs which were marked

、 、 , operate the electric jacking system correctly according the manual, take care of stoppage, accident and danger which may happen any time among the electric jacking system operation.

在开始使用电动升降系统前，请仔细阅读如下安全注意事项。

Before start to use the electric jacking system, please read the following security consideration carefully.

1.在操作电动升降系统前请详细阅读该操作使用说明书并达到完全理解的程度。否则，可能导致严重事故的发生。

1. Please read this operation manual carefully to adequately understand before operating the electric jacking system, otherwise, serious accident may happen.

2.在操作电动升降系统前请确认海洋平台是否具备升降的状态，请严格依据《海洋平台操作指南》进行平台升降流程操作。

2. Check the offshore platform in the condition for operating before operate the electric jacking system, please operate the platform jacking process according the offshore platform operation manual strictly.

3.在操作电动升降系统期间请将身体的任何部位远离电动升降系统运动部分。

3. Please keep any part of body away from the moving part of electric jacking system when operating the electric jacking system.

4.平台升降完毕进入下一次工作循环，如降平台操作时，须先进行提升平台操作，否则，可能导致严重事故的发生。

4. If platform jacking process is completed and prepare the next jacking process, for example, before the descending operation we must do the rising operation, otherwise, serious accident may happen.

5.平台经过风暴载荷后，须仔细检查齿轮齿条啮合处齿条齿面的状态，如出现划伤、拉伤或裂纹时请及时更换齿条。

5. After platform encountered storm, the condition of rack teeth face in the meshing location should be checked carefully, if there occurred scratches, drags or cracks, please exchange the rack timely.

6.在开始操作电动升降装置前要确保你自己熟悉紧急系统。

6. Before operating electric jacking system, make sure that you are familiar with the emergency system.

7. 无论任何时候，在长时间停留之后（12 小时），操作升降系统时，均应考虑下面建议：

7. Whenever, after long time (12 h) halt, begin to operate jacking system should consider the following suggestion:

7.1、在平台离开水面时，应轻微进行平台上升操作。

When platform leaves sea surface apart, platform should be raised slowly.

7.2、在平台漂浮水面时，应轻微进行提桩操作。

When platform flows on the sea surface, legs should be raised slowly.

1. 在操作期间出现异常噪音或震动要立即停机，再次启动前请确保故障处已经修复。

When the abnormal noise and shake appear, please stop the Hydro-Jacking system immediately. Confirm the malfunction is repaired before starting it again.

2. 防止润滑管路的润滑油流到地面，以免造成人员滑倒或坠落。

Prevent the oil in lubrication pipeline stream to the ground to causing people slip down or drop down.

3. 在检测或维修前，确保电源是关闭的，准备一块写有“请不要按动电源开关”的小板子放在平台前面。

Before detection or maintenance, make sure the power source is shut down, prepare a board which written Don’t press the power source button ahead of the platform.

4. 在检测或维修期间请不要启动电机。

During the detection or maintenance, don’t start motor.

5. 在操作过程中不要打开控制系统箱体。

Don’t open the control system box during the operation process.

6. 操作前请检查紧急停止和备用系统工作是否正常.

Check the emergency system and back-up system are normal before operation.

定期检测下列设备 Periodically detect the following equipments:

1) 机械和机构部分 Mechanical part

(1) 锁紧组件接触面的检查 Detection of the contact face of holding mechanism

(2) 齿轮箱的润滑 Lubrication of the gearboxes

(3) 刹车设备的异常 Abnormal condition of brakes

(4) 联接螺栓的松动 Condition of connecting bolts

(5) 齿条齿面的状态 Condition of teeth face of the racks

2) 电气部分 Electrical part

(1) 控制面板上的灰尘和水汽 Check the clearness of control panel, keep away dust and moisture.

(2) 电源连接点的松动 Check the connecting point of power source is loose or not.

3) 液压部分 Hydraulic part

(1) 自动润滑系统设备及管路、润滑效果检查 Check oil leak of hydraulic equipments and hydraulic pipeline.

(2) 在没有制造商、认证组织等同意的情况下进行任何改动所造成的故障(和)或事故等，制造商不负有任何法律责任。Manufacturer takes no legal liability for stoppage or accident caused by change which didn’t agree by manufacturer or certification body.

(3) 修理或替换任何主要元器件前必须征得制造商的同意。Before repairing or changing any major part, the manufacturer’s permission needed.

(4) 操作说明书不可能具体系统地处理到全部的安全事项。因此操作电动升降系统时请时刻保持“安全第一”的理念。Specifically and systematically referring every safety matters is impossible for operation manual, therefore, keeping the idea of safety first all the time when operating the electric jacking system.

Maintenance and repair list of electric jacking system电动升降系统保养维修清单

The following content was commended according to manufacturer's finishing drawings. 以下内容是根据厂家的完工图纸推荐的

Mechanical part机械部分：

Equipments 设备	Detection items检测项目	Detecting method检测方法	Standard values标准值	Interval of detection检测间隔	Remark 备注
Jackcase安装架	Welding line焊缝	Visual inspection目视检查		After every jacking operation每次升降操作后	
Wedge components 楔形组件	If the bolts of holding mechanism is loose夹持机构的螺栓是否松动	Try to twist the bolts试着拧紧螺栓		After every jacking operation每次升降操作后	
	If the location of wedge components is normal and the interval is normal 楔形块位置和间隔是否正常	Visual inspection目视检查		After every jacking operation每次升降操作后	
Rack齿条	Add lubricating oil 加润滑油	Visual inspection，execute during operation目测，操作时执行		Before every jacking operation每次升降操作前	
	Crack裂纹	Visual inspection目视检查		After every sailing每次航行后	
	Wear of teeth face 齿面磨损	Visual inspection目视检查		Every three times sailing 每三次航行	Checking by rack template 按齿条标准板进行检查
	Crack after storm 风暴过后裂纹	Visual inspection目视		After storm load风暴加载	

		检查		后	
Gearbox齿轮箱	Level of lubricating oil润滑油位	Visual inspection目视检查		Before every jacking operation每次升降操作前	
	Detecting the aging situation of lubricating oil检测润滑油的老化情况	Chemical examination化学测试		Every three month每三月	
	Exam the lubricating oil after some time一段时间后测试润滑油	Chemical examination化学测试		Every six month每六月	
	Oil leak润滑油泄漏	Visual inspection目视检查		After every sailing每次航行后	
	Bearing overheating and noise轴承过热及噪音	Visual inspection目视检查		After every sailing每次航行后	
	The strength of every teeth每个齿的强度	Visual inspection目视检查		After every sailing每次航行后	
	The bolts is fastening螺栓正在紧固	Knocked by hammer锤击		After every sailing每次航行后	
Sensor传感器	Velocity sensor速度传感器	Visual inspection, affirmed through operating目测，通过操作确认		After every sailing每次航行后	
	Travel sensor行程传感器	Visual inspection, affirmed through operating目测，通过操作确认		After every sailing每次航行后	
	Torque sensor扭矩传感器	Visual inspection, affirmed through operating目测，通过操作确认		After every sailing每次航行后	

2. 电动升降系统 Electric Jacking System

2.1 设备概述 Equipments overview

2.1.1 电动升降系统介绍 Electric jacking system introduction

本电动齿轮齿条升降系统用于自升式平台，由升降装置、电控系统及自动润滑系统组成。平台上的每条桩腿都配备有独立的升降装置及润滑泵站，可实现每条桩腿的独立动作或多条桩腿的协同动作。

Electric jacking system is a mechanism which is installed on platform and used for platform's raising and lowering, it is consist of jacking mechanism and electronic controlling system. Each leg on the platform was equipped independent jacking mechanism ; each leg can work singly or together.

升降装置由安装架、升降单元、锁紧楔块组件组成。

Jacking mechanism consist of jackcases, jacking units, subassembly of locking wedge.

安装架与平台焊接为一体，升降单元通过锁紧组件安装在安装架上，升降装置通过升降单元带动爬升齿轮与桩腿齿条啮合实现平台升降或桩腿升降动作。

Jackcase is welded on platform, jacking units were installed on jackcase by locking components, and racks were clamped and welded on leg. Jacking mechanism realizes the rising and descending of platform or legs through jacking units driven the gears meshing with racks.

升降装置通过变频电机驱动，实现平台（桩腿）上升、下降及锁紧动作，所有的操作都可在驾控室内进行。

Jacking mechanism is driven by electric motors, and controlled by electric to realize the platform rising and descending and the locking component movement. All the operation can be done in cab.

平台下降时，集中控制台显示屏中每个桩腿显示的负载仅供参考。

When the platform lowering, the load values of each leg shown on the screen of C.C.S. is just for referring.

平台上升时，集中控制台显示屏中显示的负载不能作为整船重量的称重，平台的重量应是空船重量+可变载荷。

When the platform rising, the load values shown on the screen of C.C.S. can't be seen as the whole weight of platform, the weight of platform is the weight of empty platform plus the changing load.

本系统通过远程的集中控制台或桩边的机旁控制箱实现系统的运动控制操作，其中集中控制台可对四条桩腿进行同时控制操作，机旁控制箱仅能实现单条桩腿的控制操作。

The system achieves motion control operation through a remote centralized control console or an on-site control box. The centralized control console can simultaneously control the movement of all four legs, while the on-site control the movement of a single leg.

本系统主要功能为在海床基础具有足够的承载能力情况下，将海上平台主体升出水面以上，避免水流、波浪对平台直接作用，影响到平台的作业。在平台作业完成后，利用升降系统将平台降至海面，并将四条桩腿升起，使平台处于漂浮状态，以便迁航至下一工位进行作业,具体一个完整的作业流程如下：

The main function of this system is to lift the main body of the offshore platform above the water surface, provided that the seabed has sufficient load-bearing capacity. This is done to avoid direct impact from water currents and waves, which could affect the platform's operations. Once the platform's operations are completed, the jacking system is used to lower the platform to the sea level and raise the four legs, placing the platform in a floating state for relocation to the next worksite. The specific workflow for a complete operation is as follows:

平台拖航或自航至工位、降桩腿、插桩、预压载、升平台、作业支持、降平台、试拔桩、拔桩、升桩腿、拖航或自航至下一工位，流程如下图所示：

The platform is towed or self-propelled to the worksite, the legs are lowered, the piles are inserted, pre-loading is applied, the platform is raised, operations are supported, the platform is lowered, pile testing is conducted, the legs are raised, and the platform is towed or self-propelled to the next worksite. The process is shown in the diagram below：

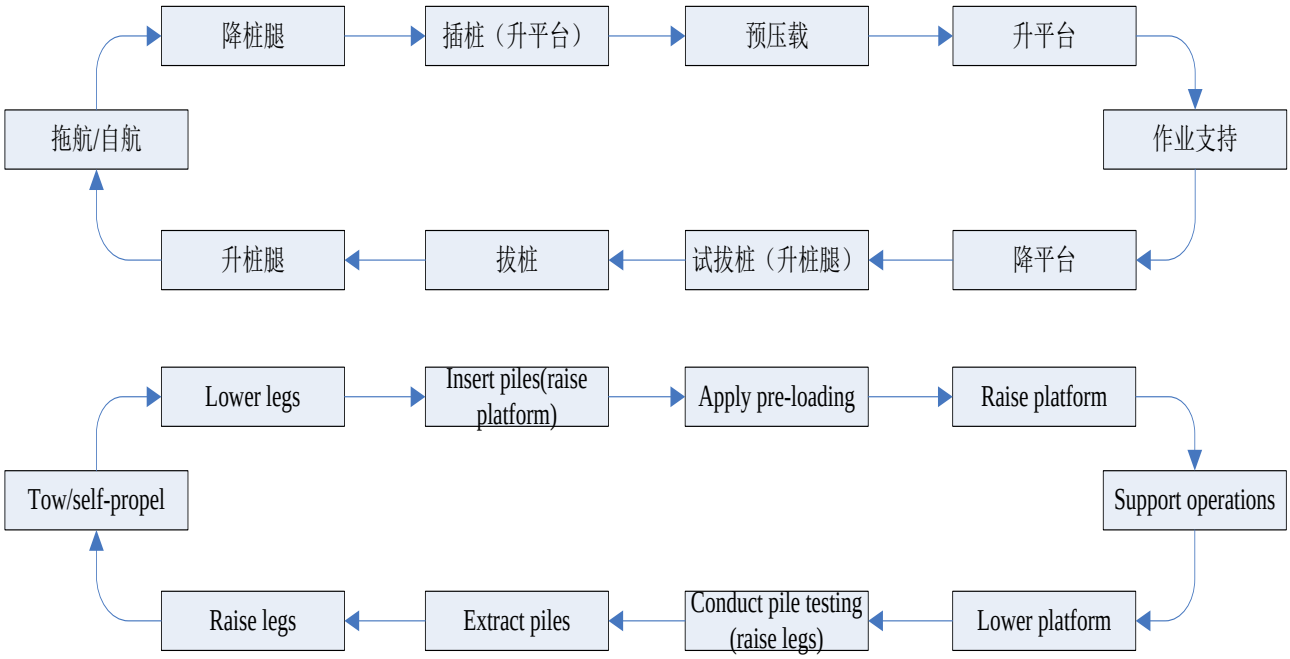

⚠注意！	以上的操作过程中所涉及到平台其他设备的操作配合，具体详见操船手册中的相关章节。
⚠CAUTION！	The coordination of other equipment operations on the platform during the mentioned processes can be found in the relevant chapters of the operating manual.

为了便于对后续章节的阅读，以上动作所涉及的章节对照表如下：

For ease of reference to subsequent chapters, here is the translated table of contents for the sections related to the mentioned actions:

序号	动作内容		涉及章节
1	拖航、自航		详见 3.3 系统停机、3.4 系统保持
2	降桩腿	远程操作	详见 3.2.1 运行前的准备操作、3.2.2 集中控制、3.3 系统停机
		机旁操作	详见 3.2.1 运行前的准备操作、3.2.3 机旁控制、3.3 系统停机
3	插桩	远程操作	详见 3.2.1 运行前的准备操作、3.2.2 集中控制
		机旁操作	详见 3.2.1 运行前的准备操作、3.2.3 机旁控制
4	预压载		详见 3.2.1 运行前的准备操作、3.2.2 集中控制、3.2.2.7 预压载
5	升平台	远程操作	详见 3.2.1 运行前的准备操作、3.2.2 集中控制、3.2.2.6 桩腿下降/平台上升
6	作业支持		详见 3.3 系统停机、3.4 系统保持
7	降平台	远程操作	详见 3.2.1 运行前的准备操作、3.2.2 集中控制、3.2.2.5 桩腿上升/平台下降
8	拔桩		详见 3.2.1 运行前的准备操作、3.2.2 集中控制、3.2.2.8 拔桩
9	升桩腿	远程操作	详见 3.2.1 运行前的准备操作、3.2.2 集中控制、3.2.2.5 桩腿上升/平台下降、3.3 系统停机
		机旁操作	详见 3.2.1 运行前的检查和准备、3.2.3 机旁控制、3.2.2.5 桩腿上升/平台下降、3.3 系统停机

Serial number	Action content		Involved chapter
1	Tow		Please refer to section 3.3 for system shutdown, section 3.4 for system hold status.
2	Lower legs	Remote operation	Please refer to section 3.2.1 prepare for operation and preparations, section 3.2.2 for centralized control, and section 3.3 for system shutdown.
		Side operation	Please refer to section 3.2.1 prepare for operation, section 3.2.3 for local operation, and section 3.3 for system down.
3	Insert legs	Remote operation	Please refer to section 3.2.1 prepare for operation, section 3.2.2 for central control.
		Side operation	Please refer to section 3.2.1 prepare for operation, section 3.2.3 for local operation.
4	Preload		Please refer to section 3.2.1 prepare for operation, section 3.2.2 for central control, section 3.2.2.7 for Preload
5	Raise platfom	Remote operation	Please refer to section 3.2.1 prepare for operation, section 3.2.2 for central control, section 3.2.2.6 for leg down/hull raise.
6	Pull leg testing		Please refer to section 3.3 for system down, section 3.4 for system hold status.
7	Lower platform	Remote operation	Please refer to section 3.2.1 prepare for operation, section 3.2.2 for central control, section 3.2.2.5 for leg rise/hull down.
8	Pull leg		Please refer to section 3.2.1 prepare for operation, section 3.2.2 for central control, section 3.2.2.5 for pull leg rise/hull down.
9	Raise legs	Remote operation	Please refer to section 3.2.1 prepare for operation, section 3.2.2 for central control, section 3.2.2.5 for leg rise/hull down, section 3.3 for system down.
		Side operation	Please refer to section 3.2.1 prepare for operation, section 3.2.3 for central control, section 3.2.2.5 for leg rise/hull down, section 3.3 for system down.

注意 **CAUTION!**	1）在阅读本书时，仅阅读对照表内涉及的章节内容，是不能满足正常操作、维护要求的。 2）对照表仅仅为操作内容的一个快速索引，对照表所涉及的章节并未包含该动作的全部注意事项。 3）为了更好的操控设备，需要对本书所有的章节进行详细阅读和充分的理解。 1）Merely reading the chapters listed in the table of contents is insufficient c to meet the operational and maintenance requirements. 2）The table of contents serves as a quick index for operational content only, and does not include all the precautions and considerations related to the mentioned actions. 3）To better operate the equipment, it is necessary to thoroughly read and understand all chapters in this work.

2.1.2 使用环境 Service environment

- 环境温度： 0℃～50℃
- 最大作业水深： 53m
- 机舱温度： ≤55℃
- 海水温度： 0~35℃
- 相对湿度： 50%~70%
- 能在潮湿空气、盐雾、油雾、霉菌、平台正常作业中产生的振动和冲击下正常使用。
- 船舶纵横摇摆：满足 ABS 移动平台规范对于自升式平台倾斜角要求

设备类型	任何方向（°）	
	静倾	动倾
与安全相关的设备	10	15
应急电源、压载系统	15	15

- Ambient Temperature 0℃～50℃
- Maximum operating depth 53m
- Engine room temperature ≤55℃
- Sea Temperature 0℃~35℃
- Relative Moisture 50%~70%

- Capability of working under the condition of combination of damp air, salt atmosphere, oil fog, mold, the vibration and impact due to normal operations.
- Ship swaying:Meet the ABS mobile platform specifications for self-elevating platform angle of inclination requirements.

Device type	Any direction（°）	
	Statical inclination	Dynamic inclination
Security-related equipment	10	15
Emergency power supply、ballasting system	15	15

2.1.3 设备参数 Equipments parameters

表 2-1 电动升降系统设备参数表

类别		升降系统：电动齿轮齿条升降系统
桩腿数量	个	4
升降单元数量/每桩	个	12
额定提升力/每桩	Ton	110
预压载载荷/每桩	Ton	165
单齿风暴锁紧力	Ton	220
平台额定升降速度	m/min	0.6
桩腿额定升降速度	m/min	1.0
平台报警角度		0.5°(报警)/0.8°(停机)
电制		AC 690V/50Hz/3ph
		AC 400V/50Hz/3ph
		AC 220V/50Hz（control）
设备使用寿命		2000h 额定/400h 预压载
船级规范		ABS

Table2-1 Equipment parameters list of electric jacking system

category		Jacking system: Electric rack and pinion jacking system
Number of legs	set	4
Jacking units of each leg	set	12

Rated Jacking Capacity each driving unit	Ton	110
Pre-Load Capacity each driving unit	Ton	165
Severe Storm Holding Capacity each driving unit	Ton	220
hull jacking speed	m/min	0.6
leg jacking speed	m/min	1.0
Platform alarm angle		0.5 ℃(alarm)/0.8 ℃(stop)
Electric Source		AC 690V/50Hz/3ph(main transformer)
		AC400V/50Hz/3ph(Power box and pre-magnetized transformer)
		AC 220V/50Hz（control）
Normal Jacking Life (Pre-loading Life)		2000 Hours/400Hours
Rule		ABS

2.2 机械部分 Mechanical Part

2.2.1 主要组成 Major Component

升降装置由安装架、齿轮箱、电机及制动器、锁紧楔块组件及齿条组成，如图 2.2.1 所示。齿轮箱的前后法兰通过螺栓与安装架固定在一起。锁紧楔块组件根据安装架上已焊接好的 K 型板以及齿轮箱的前后法兰板进行拂配，可以通过调整锁紧楔块组件以调整齿轮箱法兰的位置，从而使小齿轮与齿条拥有较好的啮合状态。

The jacking mechanism is composed of jackcase, gearbox, motor and brake, locking wedge assembly and rack, as shown in Figure 2.2.1. The front and rear flanges of the gearbox are bolted to the jackcase. The locking wedge assembly is brushed according to the welded K-shaped plate on the jackcase and the front and rear flange plates of the gearbox. The position of the gearbox flange can be adjusted by adjusting the locking wedge assembly. So that the pinion and the rack can have a better meshing state.

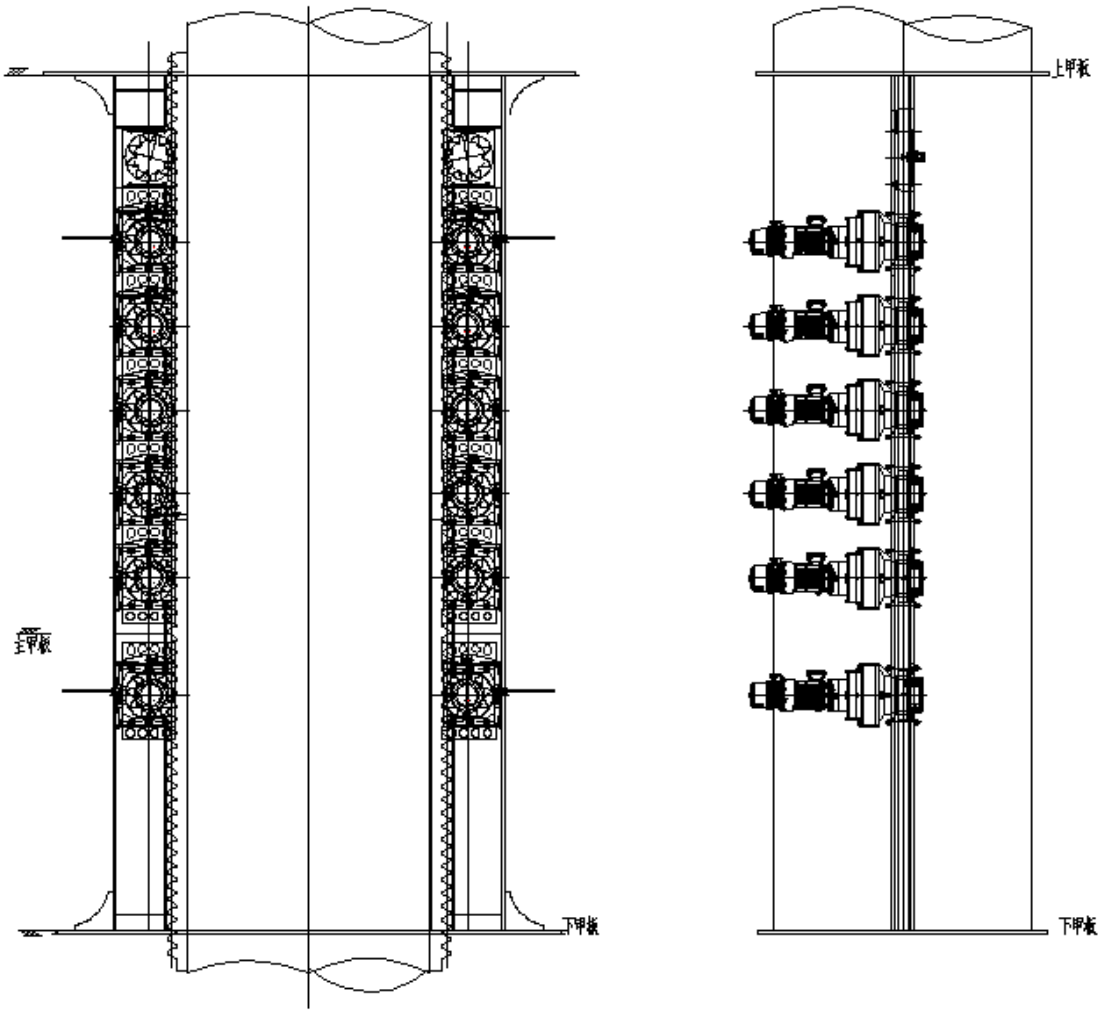

图 2.2.1 升降装置

Figure2.2.1 jacking mechanism

2.2.2 安装架 Jackcase

每个桩套左右各有一个安装架，每个安装架上布置有 6 个升降单元。安装架与桩套及船体围阱焊接，环抱桩腿。

安装架组件主要由安装架 π 形板、K 形板、筋板、楔形块等组成。

Each pile sleeve is provided with a jackcase on the left and right, 6 jacking units are arranged on each jackcase.

The jackcase subassembly is mainly composed of π-shaped plate, K-shaped plate, rib plate, wedge block, etc.

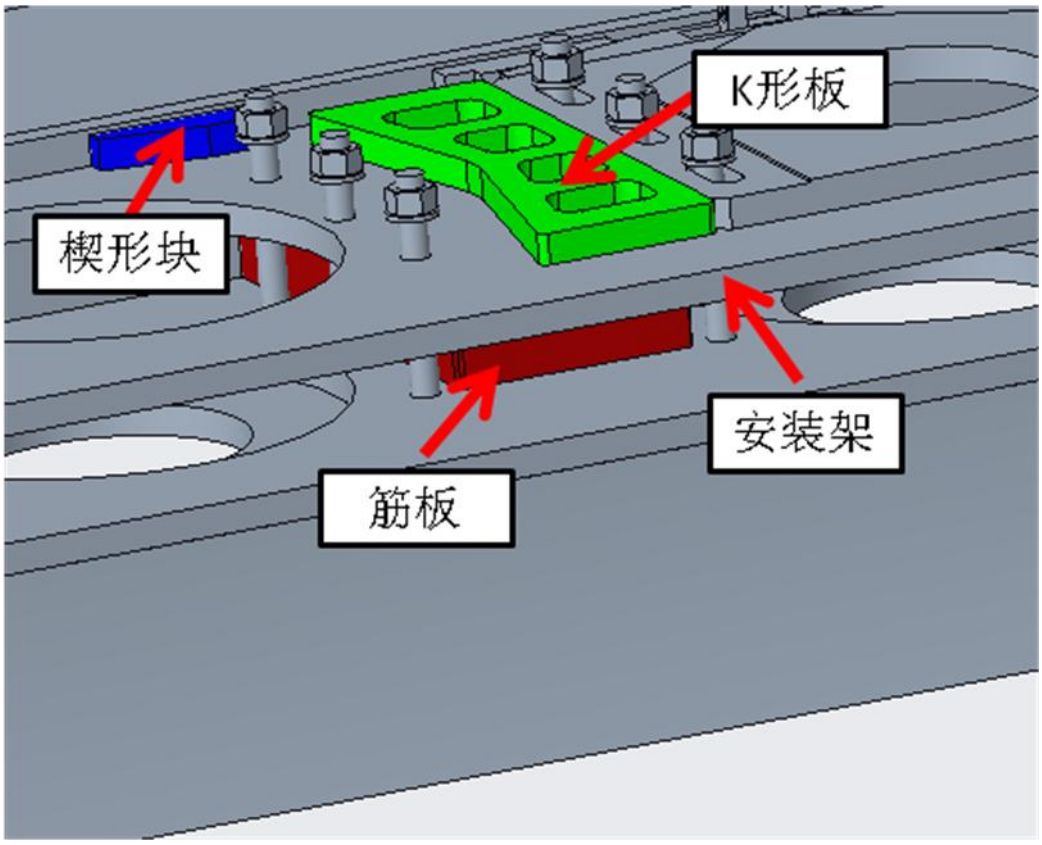

图 2.2.2 安装架组件

Figure2.2.2 Subassembly of jackcase

2.2.3 升降单元 Jacking Unit

升降单元由齿轮箱、电机及制动器组成。升降单元分左右手型，对称布置在桩腿弦管两侧，升降单元齿轮箱由变频电机驱动，电机内置电磁制动器，用于动态制动和静态锁紧。

与齿条啮合的齿轮实际上是一个齿轮轴，采用修齿的方法来提高其抗弯强度。电动机提供的动力通过行星齿轮箱传递到齿轮轴上。电动机后方安装电磁制动器，用于工作制动。升降单元的整体结构如图 2.2.3 所示。

The jacking unit is composed of a gearbox, motor and brake. It is divided into left-handed and right-handed types, symmetrically arranged on both sides of the leg chord tube. The gearbox of the jacking unit is driven by a variable frequency motor, and the motor is equipped with an electromagnetic brake for dynamic braking and static locking.

The gear meshing with the rack actually is a gear shaft, which applied the method of teeth modification to enhance the bending strength. The power supplied by electromotor is transferred by epicylic gearboxes to gear shaft. Behind the electromotor installed electromagnetic brake which is used for working arrestment. The whole structure of jacking unit is shown as figure2.2.3.

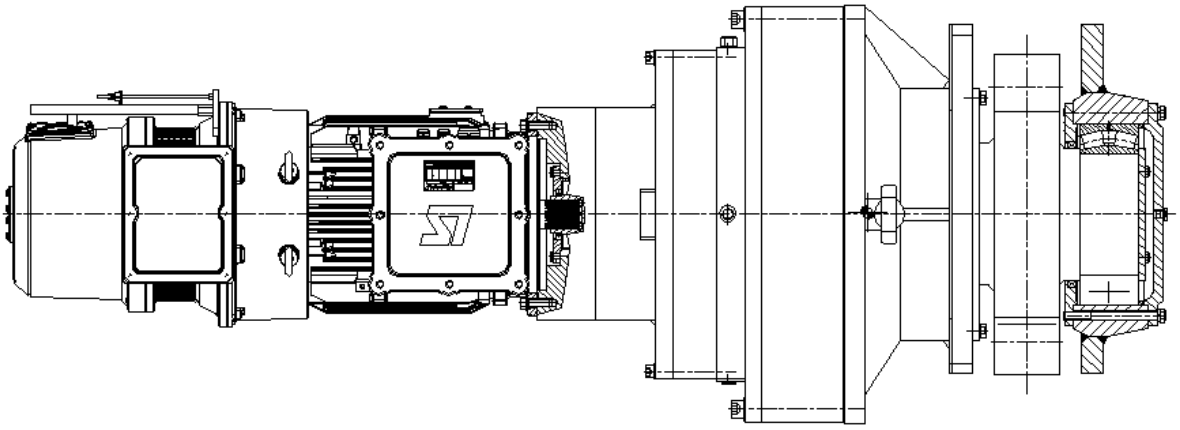

图 2.2.3 升降单元

Figure2.2.3 jacking unit

1、 齿轮箱 gearbox

齿轮箱通过螺栓固在安装架上。齿轮箱安装法兰为方形法兰板，通过楔形块约束减速箱法兰板的水平方向及垂直方向位移、承担齿轮箱扭矩，齿轮箱后支撑法兰轴承为调心滚子轴承，支撑法兰与安装架上前后轴承孔配合，承担升降过程中的水平力和垂向力，如图 2.2.4 所示。

齿轮轴是齿轮箱的一部分，由齿轮箱供应商随齿轮箱一起提供；在安装齿轮箱的过程中，不需要拆卸齿轮轴，如图 2.2.4 所示。

The gearbox is mounted on the installation frame using bolts. The gearbox is equipped with a square flange plate as the mounting flange. It is constrained in both horizontal and vertical directions by wedge blocks, which also bear the torque of the gearbox. The rear support flange bearing of the gearbox is a self-aligning roller bearing, which is fitted into the corresponding front and rear bearing holes on the installation frame. It is responsible for withstanding horizontal and vertical forces during the lifting process, as illustrated in Figure 2.2.4.

Gear shaft is a part of gearbox which is supplied by gearbox provider together with gearbox; it doesn’t have to uninstall the gear shaft in the process of installation of gearbox, as shown in the figure 2.2.4.

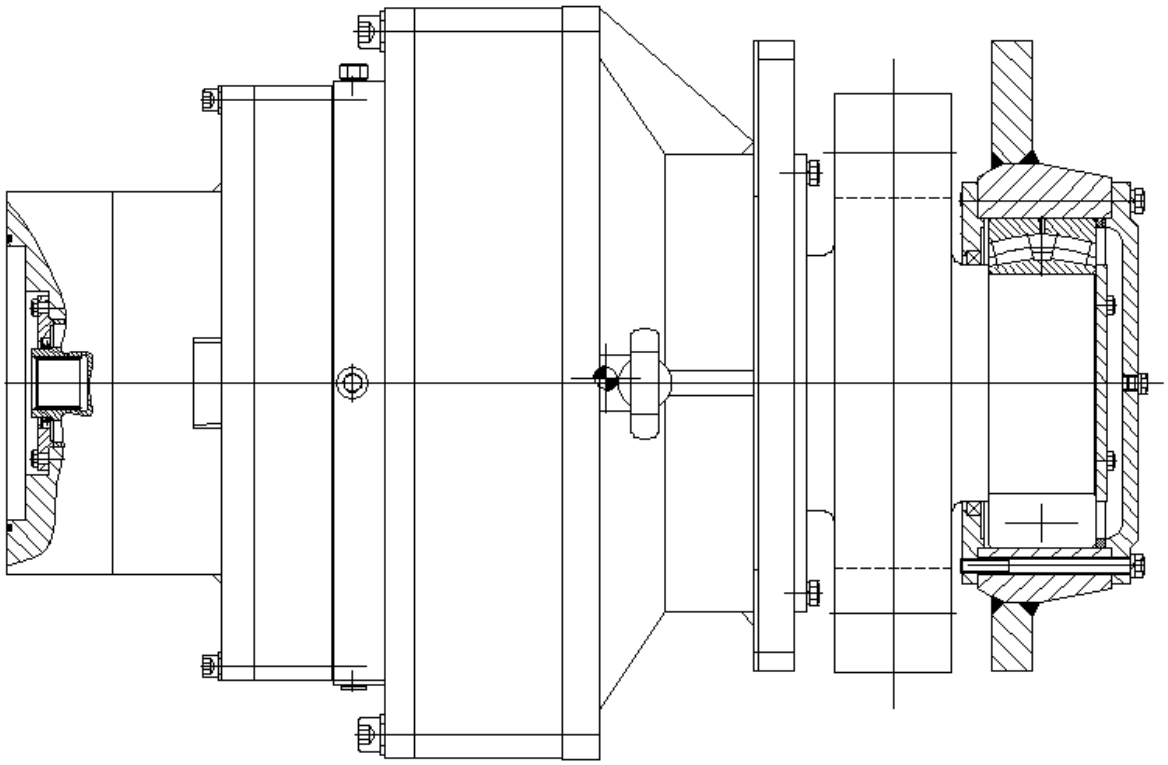

图 2.2.4 齿轮箱

Figure2.2.4 Gearbox

齿轮箱参数如下表 2-2 所示：

表 2-2 齿轮箱参数表

齿轮箱技术参数			
额定输出扭矩	271656Nm	传动比	2550
单齿额定升降能力	110t	小齿轮模数	56
单齿预压载举升能力	165t	齿数	9
单齿静态支持能力	220t	压力角	25°
单齿风暴支持能力	220t	额定使用寿命/预压载寿命	2000h/400h
单齿风暴支撑力（单个单元失效）	220t	齿轮箱干重/湿重(kg)	2200/2300

Table2-2 Technical parameters of gearbox

Technical parameters of gearbox			
Rated output torque	271656Nm	Transmission ratio	2550
Rated lifting capacity of	110t	Pinion module	56

single tooth			
Single-tooth pre-loading lifting capacity	165t	Number of teeth	9
Single-tooth static support capability	220t	Pressure angle	25 °
Single-tooth storm support capability	220t	Rated service life/Pre-loading life	2000h/400h
Single-tooth storm support force(single unit failure)	220t	Gear box dry weight/wet weight(kg)	2200/2300

2、 电机及制动器 Electromotor and brake

电机为变频驱动，带独立的加热器，带有过载、过热、断相等保护功能。电机内置电磁制动器为常闭式的电磁抱闸制动器，带有位移开关、温度开关及磨损监测，用于检测制动器的制动状态及过热状态，具有人工松刹手柄，可人为松刹。

电机及制动器外形见图，电机及制动器技术参数如下表所示。单个平台 48 台电机及制动器，均带有编码器，其中 4 台电机与制动器带超速开关，电机及制动器与齿轮箱输入法兰通过螺栓进行机械连接。

The motor is driven by a variable frequency drive and equipped with an independent heater. It has protection functions such as overload, overheat, and phase loss protection. The motor has a built-in electromagnetic brake, which is normally closed. It includes displacement switches, temperature switches, and wear monitoring to detect the braking status and overheating of the brake. It also has a manually released brake handle for manual release.

The appearance of the motor and brake is shown in the diagram, and the technical parameters of the motor and brake are listed in the table below. There are 48 motors and brakes for each individual platform, among which 4 motors and brakes are equipped with encoders. The motor and brake are mechanically connected to the input flange of the gearbox using bolts.

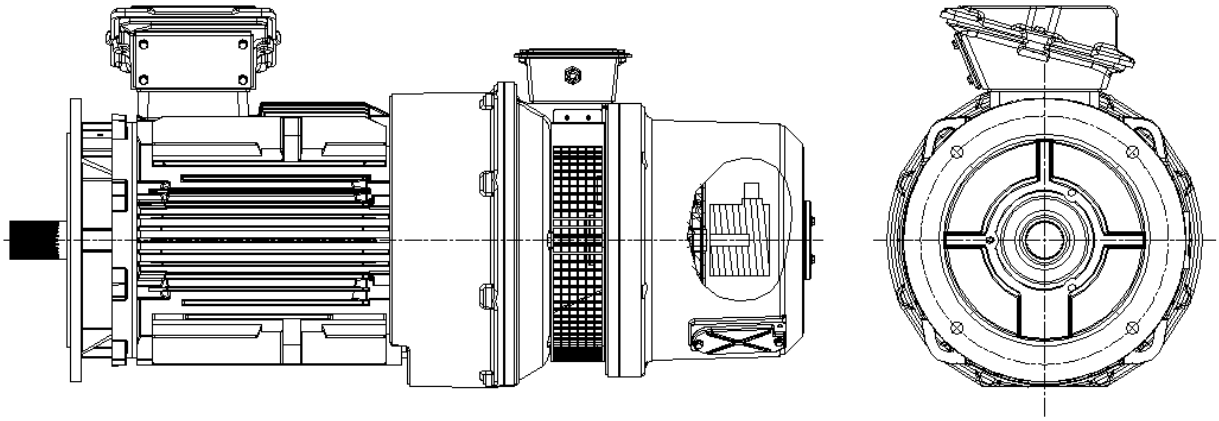

图 2.2.5 电机及制动器

Firgure2.2.5 Electromotor and brake

表 2-3 电机及制动器技术参数表

电机技术参数	
电机极数	6 极
电机功率	22KW
电制	380V/50Hz
额定转速	970r/min
静态制动力矩	330Nm±20%
绝缘、温升等级	H/F

Table2-3 Technical parameters of electromotor

Technical parameters of electromotor	
Pole	Six
Electromotor power	22KW
Electric source	380V/50Hz
Rated rev	970r/min
Braking torque	330Nm±20%
Grade of insulation and temperature rising	H/F

2.2.4 锁紧楔块组件 Subassembly of locking wedge

锁紧楔块组件是齿轮箱定位的关键零部件，包括楔形块调整组件、楔形块。通过件 1 和件 2 与 K 型板实现垂向定位，通过件 2、件 3 实现水平定位，检查完毕后，通过压板（件

4、件 5）锁紧固定，相互配对的楔形块可以自锁，防止发生滑移。

Subassembly of locking wedge is the key component of gearbox positioning, including wedge adjustment assembly and wedge block. Vertical positioning is realized by parts 1 and 2 and K-shaped plate, horizontal positioning is realized by parts2 and 3. After inspection, locking and fixing by the pressing plate(parts4 and 5). The mutually wedge can be self-locked to prevent slippage.

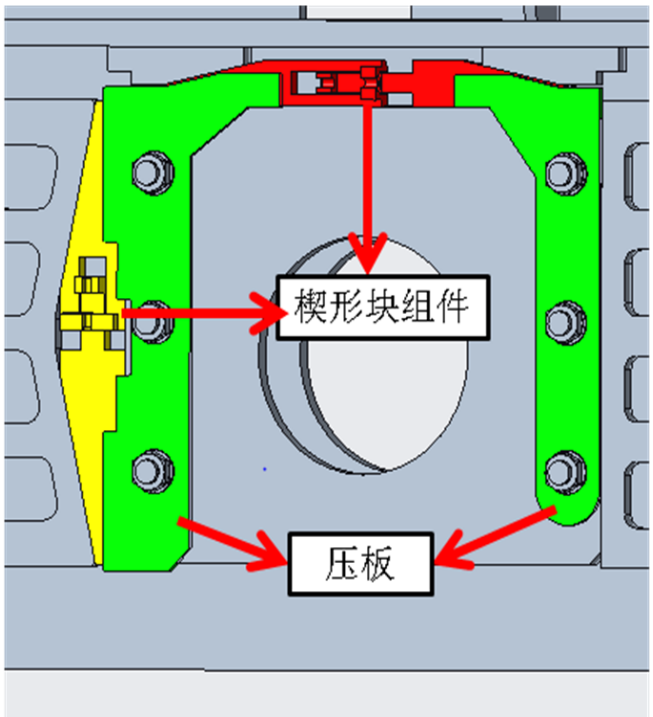

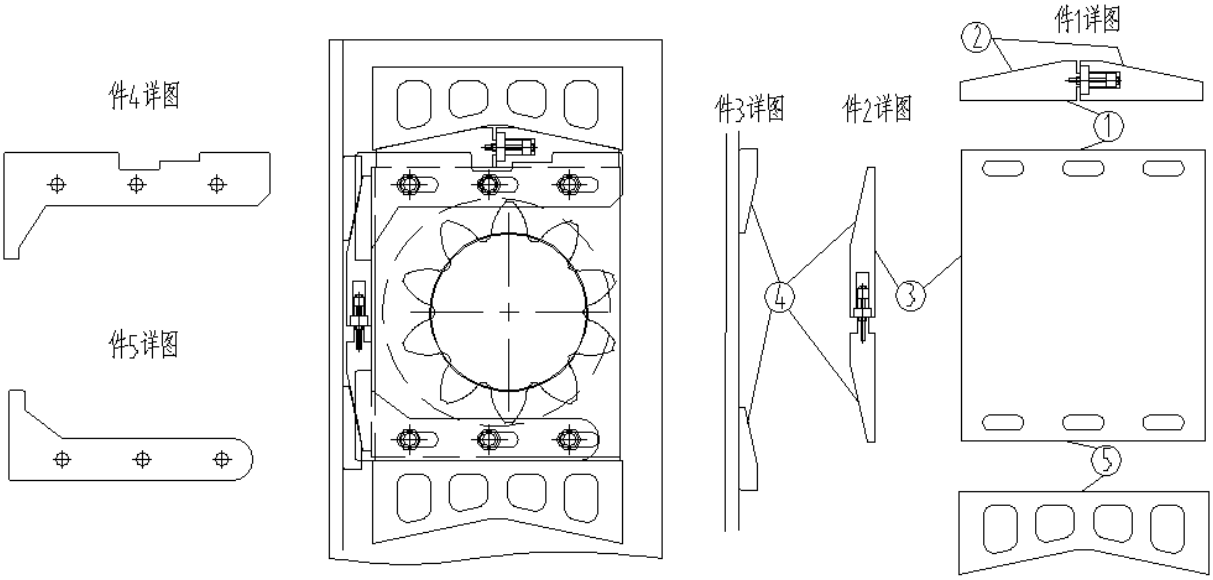

图 2.2.6 锁紧楔块组件

Firgure2.2.6 Subassembly of locking wedge

锁紧楔块件号说明			
序号	数量	部套件	功能
件 1	1	包括两个楔形块、螺栓 M12x130、锁紧螺母 M12、2 个平垫圈 12	调整垂向位移，锁紧 M12 螺栓，实现垂向定位
件 2	1	包括两个楔形块、螺栓 M12x175、锁紧螺母 M12、2 个平垫圈 12	调整水平位移，锁紧 M12 螺栓，实现水平定位
件 3	2	挡块	实现水平定位
件 4	1	压板 A	锁紧楔块和齿轮箱
件 5	1	压板 B	锁紧楔块和齿轮箱

Locking wedge with part number instructions			
Number	Quantity	Matching set	Function
Part1	1	Including 2 wedge blocks, bolts M12x130, locking nuts M12 and 2 flat washers	Adjust the vertical displacement, tighten the M12 bolt to achieve vertical positioning
Part2	1	Including 2 wedge blocks, bolts M12x175, locking nuts M12 and 2 flat washers	Adjust the horizontal displacement, tighten the M12 bolt to achieve horizontal positioning
Part3	2	Block	Achieve horizontal positioning
Part4	1	Press plate A	Lock the wedge block and gearbox
Part5	1	Press plate B	Lock the wedge block and gearbox

2.2.5 编码器组件 Travel Sensor Components

编码器组件如下图所示。每个桩腿有两个编码器组件，安装在安装架最上方的安装孔，用于检测升降系统行程。编码器组件通过螺栓与安装架连接。安装时编码器组件齿轮片需要与齿条对中。

The encoder components are shown in the diagram below. Each pile leg is equipped with two encoder components, installed in the top mounting hole of the jackcase, for detecting the

travel of the jacking system. The encoder components are connected to the jackcase using bolts. During installation, the gear slice of the travel sensor needs to be aligned with the rack.

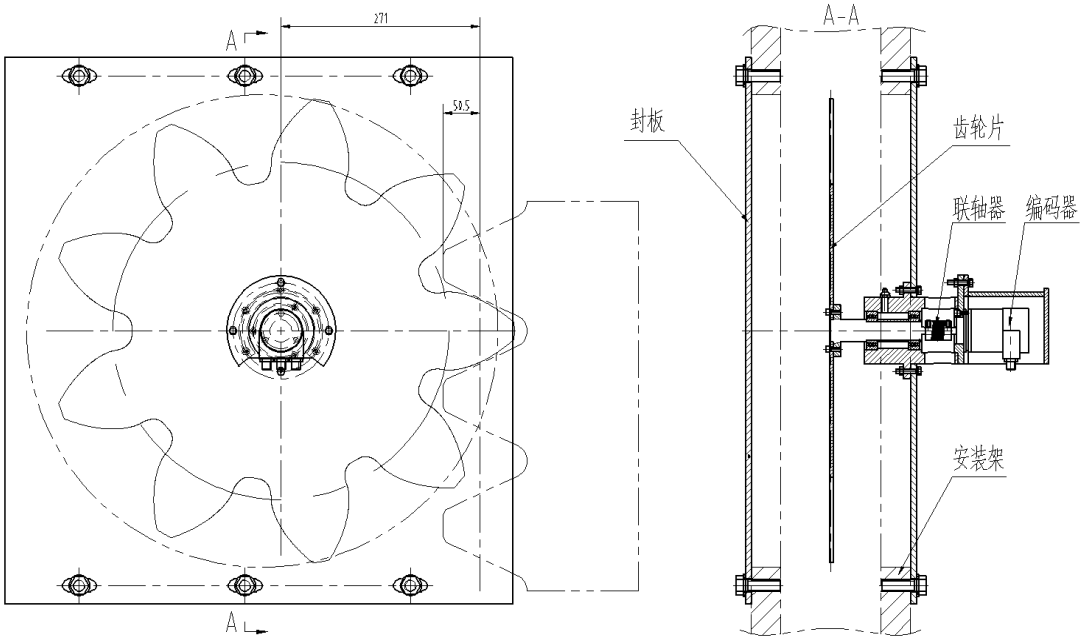

图 2.2.7 编码器组件

Figure2.2.7 Encoder Components

2.3 自动润滑系统 Automatic lubrication system

2.3.1 系统原理 System principle

每根桩腿旁布置有一套自动润滑系统，采用电机作为动力源，由电动润滑泵输送润滑油脂，通过油脂分配器，将油脂均分成 4 份，通过终端喷射阀，利用空气作为动力，将润滑脂喷射至需要润滑的齿轮表面。

Each leg isequipped with a lubrication system，the lubrication system uses an electric motor as the power source，lubricating grease is transportedby an electric lubrication pump. The lubricating grease is divided into 4parts through a distributor， and compressed air is used to spray The lubricating greaseonto the surface of the gear through the injection vavle.

该润滑系统具有自动润滑和强制润滑两种模式。自动润滑启动时，润滑系统的给酯和间隔时间等运行参数可在本地控制箱上进行设置；强制润滑时，只要强制润滑信号触发，润滑系统连续给酯。系统提供油路堵塞报警、低液位报警和气压低报警。

The lubrication system has 2 modes：automatic lubrication (remote mode) and mandatory lubrication.During automatic lubrication， the working time and interval time of the lubricationsystem can be set on the local control box. When mandatory lubrication is applied，the system runs continuously until the selection switch is turned to stop. The lubrication system has oil circuit blockage alarm，low liquid level alarm，and low air pressure alarm.

整个系统主要配置包括：润滑泵站、分配器、喷射阀及管路附件。润滑泵站外形图详见完工图《0422PTS28A-1-02-02-01WG 润滑泵站》。分配器外形图详见完工图《0422PTS28A-1-02-02-02WG 分配器》。喷射阀外形图详见完工图《0422PTS28A-1-02-02-03WG 喷射阀》

The lubrication system mainly includes：lubrication pump station， distributor，injection valve and pipeline etc. The outline drawing of lubrication pump station is detailed in the finish drawing of 《0422PTS28A-1-02-02-01WG Lubrication pump station》. The outline drawing of distributor is detailed in the finish drawing of 《0422PTS28A-1-02-02-02WG Distributor》. The outline drawing of injection valve is detailed in the finish drawing of 《0422PTS28A-1-02-02-03WG Iinjection valve》.

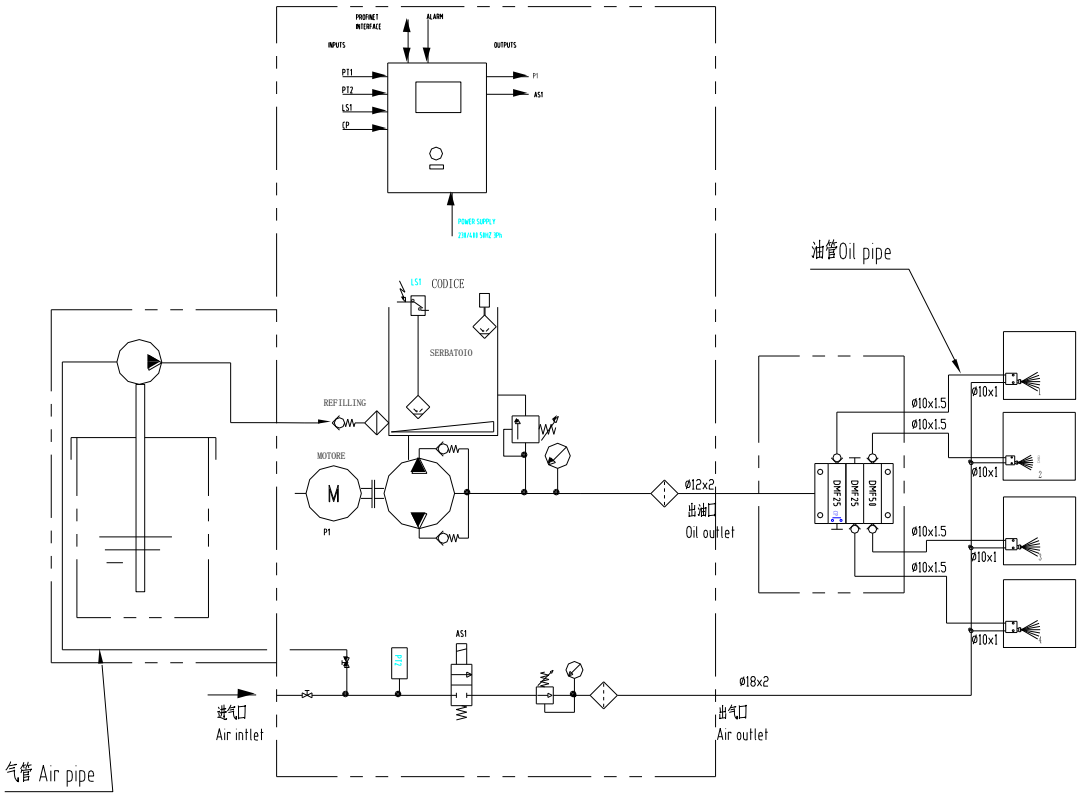

2.4 电气系统 Electric System

升降控制系统是以 PLC 和变频器为核心的现场总线变频控制系统，包含变频驱动柜组、制动电阻、桩腿控制单元、集中控制台、机旁控制箱等电控设备。系统采用西门子 1500R 冗余 PLC 控制，主备 CPU 放置于升降集中控制台内，两者形成互为冗余；其余柜体内设有从站，PLC 从站之间使用 Profinet 通讯，部分柜体间采用光纤环网联接。PLC 与 HMI 采用以太网联接，通过交换机进行数据交互。

The jacking control system is a fieldbus frequency conversion control system with PLC and frequency converter as the core, including frequency conversion drive cabinet, brake resistance, leg control unit, central control station, local control box and other electronic control equipment. The system adopts Siemens 1500R redundant PLC control, the main and standby CPU are placed in the central control station, the two form mutual redundancy; The other cabinets are equipped with slave stations, and Profinet communication is used between PLC slave stations, and optical fiber ring network is used to connect some cabinets. PLC and HMI use Ethernet connection, data exchange through the switch.

该升降操作系统由控制系统和动力系统两部分组成，用户可在集中控制台和机旁控制箱上对升降系统进行操作。

The jacking operation system consists of two parts: control system and power system. Users can operate the jacking system on central control station and local control box.

电控系统主要由以下部分组成：

Electronic control system is mainly composed of the following parts:

序号 serial number	名 称 Device	数 量 Number	安装位置 Installation place	功 能 Function
1	集中控制台 Central control station	1	驾驶室 bridge	升降系统的主操作区，主要负责接收集中控制台的操作信号并通讯给各桩腿，同时有触摸屏监控整个升降系统的状态。 The main operation area of the jacking system, it is mainly responsible for receiving the operation signal of the centralized console and communicating it to each pile leg, and there is a touch screen to monitor the status of the jacking system.

2	桩腿控制单元 Leg control unit	4	升降电气设备间 Jacking electrical equipment room	主要负责采集各桩腿的状态信号并将桩腿控制的逻辑指令输出给各执行机构。 Its main function is to collect information of each leg and output control instruction to the execution after logic operation.
3	机旁控制箱 Local control box	4	桩腿旁 Legs nearby	实现桩腿机旁单桩升降、单个电磁制动器释放测试等功能。 Realize the function such as leg lifting, brake releasing.
4	移相变压器 phase shifting transformer	2	机舱 cabin	将 690V 电压电源的电压降低至 400V，将供电电源移动一定的相位角，减小输入侧斜波电流。 Reduce the voltage of the 690V voltage power supply to 400V, and move the power supply to a certain phase Angle to reduce the input side oblique current.
5	变频电源柜 Variable frequency source cabinet	2	升降电气设备间 Jacking electrical equipment room	变频电源柜 Variable frequency source cabinet
6	电源箱 Power box	2	升降电气设备间 Jacking electrical equipment room	给润滑系统和制动电阻器柜风机供电。 Distribute power lubrication equipment and brake resistor cabinet fan.
7	制动电阻柜 Brake resistor cabinet	2	甲板 deck	消耗制动电能 Consume the braking electrical energy
8	绝对值编码器 Absolute encoder	8	在安装架的顶部 At the top of jackcase	监测桩腿的位移 Monitoring displacement of the pile legs
9	桩腿接线盒 Leg junction box	8	甲板 Deck	用于桩腿电缆的汇总 The sum of the pile legs cable
10	电子水平仪 Slope angle sensor	1	集中控制台里面 Under the	监控平台的水平状态 Monitoring the level state of the hull.

			central control station	

系统的网络结构如下图所示：

The network of the jacking system is as bellow:

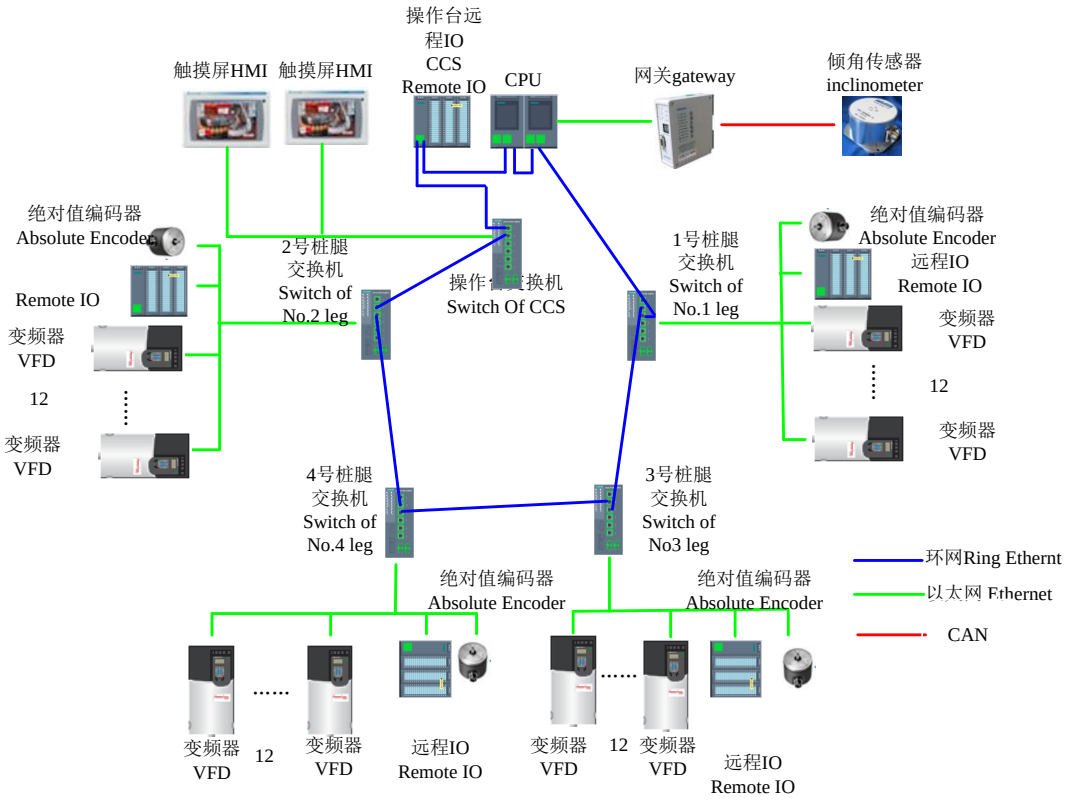

图 2.4.1 控制系统网络结构图

Fig. 2.4.1 The network of control system

2.4.1 集中控制台 Central control station

集中控制台安装于驾驶室内，是升降装置的主操作区，设置有相关的控制器件，用于控制机构动作，为每个桩腿单独设置控制按钮，可以全船联动升降也可单桩单动。升降中控台设置有 2 个触摸屏，用于对机构动作状态显示监控，2 个触摸屏互为备用。

Central control station installed in the bridge and is the main operation area of the jacking device. It is equipped with related control devices to control the mechanism action. The control button is set separately for each pile leg, which can be used for jacking and jacking of the whole ship, or for single pile. The central control station is equipped with two touch screens, which are used to display and monitor the mechanism's action status. The two touch screens are alternate to each other.

集中控制台主要有如下部件组成：

The central control station mainly consists of the following components:

1） 电子水平仪 electronic level

2） 气泡水平仪 bubble level

3） 19 寸触摸屏 19-inch touch screens

4） 1 套 S7-1500R PLC 系统 1 set of S7-1500R PLC system

5） 1 套西门子交换机 1 set of Siemens switches

6） 选择开关、按钮和指示灯若干。switches, buttons and indicators.

集中控制台有如下控制和指示功能：

The central control station has the following control and indication functions:

- 紧急停止功能 Emergency stop function

按下紧急停止按钮后，除 PLC 电源外，所有动力、控制电源失电，电磁制动器抱闸。

After pressing the emergency stop button, in addition to the PLC power supply, all power and control power is lost, electromagnetic brake lock.

- 升降功能 Lifting function

控制平台四条桩腿的升降控制。各桩腿既可以联动，也可以单动。

The lifting control of four pile legs of the control platform. Each leg can be linked, or can be moved alone.

- 预压功能 Preloading function

通过对角线主动顶升平台来实现桩腿的主动预压。

The active preloading of pile leg is realized by the diagonal active jacking platform.

- 单个升降单元载荷调整（R-torque）功能 Single jacking unit load adjustment (R-torque) function

通过调整升降单元的载荷，避免升降单元带载起动。

By adjusting the load of the jacking unit, the jacking unit is prevented from starting with load.

- 平台倾斜保护功能 Platform tilt protection function

电子测斜仪实时测量平台倾斜角度，在集中控制台面板上设有专门显示平台 水平状态的显示屏。当平台倾斜角度超过预定范围后，进行自动报警并停止升、 降工作，并提示人工干预调整。气泡式测斜仪安装在集中控制台上，作为电子水平仪故障后的备用。

The electronic inclinometer measures the tilt Angle of the platform in real time, and a display screen is provided on the central control station to display the horizontal state of the platform. When the platform tilt Angle exceeds the predetermined range, the automatic alarm and stop the lifting and lowering work, and prompt manual intervention adjustment. The bubble

type inclinometer is installed on the central console as a backup in case of failure of the electronic level.

- 倾斜保护忽略功能 Tilt protection Ignore function

在船体平台升降过程中，如需要进行超过规定倾斜角度的操作或电子测斜仪失灵时，可使用倾斜保护忽略功能，此时电子测斜仪不再参与控制。人工观察集中控制台上的气泡式测斜仪来判断平台倾斜状态。该功能使用时，设备处于一种不受保护状态，属于危险性质操作，操作时各桩腿侧、气泡式测斜仪处必须有专人定点观察状态，通讯系统必须保持畅通。

In the process of lifting the hull platform, if the operation exceeding the specified tilt Angle is required or the electronic inclinometer fails, the tilt protection ignore function can be used, and the electronic inclinometer will no longer participate in the control. Manually observe the bubble type inclinometer on the centralized console to judge the platform tilt state. When this function is used, the equipment is in an unprotected state, which is a dangerous operation. During operation, the side of each pile leg and the bubble inclinometer must be observed by special personnel at a fixed point, and the communication system must be kept unimpeded.

- 参数设置、显示功能 Parameter setting, display function

通过触摸屏对升降单元过载、不平衡、速度异常、上下限位等报警点、桩腿位移、升降速度等参数的设置功能；并显示、监控平台升降过程中的过程数据，包括平台升降过程中各小齿轮的载荷显示、桩腿升降高度显示，平台倾斜角度显示、桩腿速度显示、各电机转速和转矩显示等。

Through the touch screen, the function of setting parameters such as overload, imbalance, abnormal speed, upper and lower limit, pile leg displacement, lifting speed, etc. And display, monitor the platform lifting process of the process data, including the platform lifting process of each pinion load display, leg lifting height display, platform tilt Angle display, leg speed display, motor speed and torque display.

- 重载问询功能 Heavy Load Request function

向配电板询问功率是否够升降系统动作。

Ask the switchboard if the power is sufficient to lift the system.

- 常用控制显示，故障报警功能。 Commonly used control display, fault alarm function.
- 控制权限切换功能 Control permission switching function

中央控制台具有最高控制权限，当权限在中央控制台时，机旁不能操作，只能监控；当权限从中央控制台切换给桩边后，只有桩边按下确认按钮后，权限才切换给桩边，否则权限还是在中央控制台；另外只有桩腿动作停止时，才可以切换权限，否则权限切换无效。

The central console has the highest control authority, when the authority is in the central console, the machine can not operate, only monitor; When the authority is switched from the

central console to the pile side, only after the pile side presses the confirm button, the authority is switched to the pile side, otherwise the authority is still in the central console; In addition, the permission can be switched only when the leg action stops, otherwise the permission switch is invalid.

➢ 自动润滑控制功能 Automatic lubrication control function

升降系统的触摸屏中单独设置一个自动润滑控制界面，自动润滑功能分自动和手动控制两种。选择自动控制，当桩腿升降动作时，自动润滑会按设定频率自动喷润滑脂；选择手动控制操作人员可以手动控制各桩腿自动润滑的起动和停止。

An automatic lubrication control interface is set separately in the touch screen of the lifting system, and the automatic lubrication function is divided into automatic and manual control. Select automatic control, when the pile leg lifting action, automatic lubrication will automatically spray grease according to the set frequency; Select Manual control The operator can manually control the start and stop of automatic lubrication of each pile leg.

参数 **parameter**	说明 **Description**
输入电源 input power	AC220V/50HZ
防护等级 protection	IP 23
触摸屏尺寸 Touch screen size	19 寸 19-inch
尺寸(L×H×D) Size (L×H×D)	1300*1240*900mm
电缆连接 cable connection	底部进线 cable inlet from bottom
重量 weight	About 350KG
颜色 colour	RAL7035

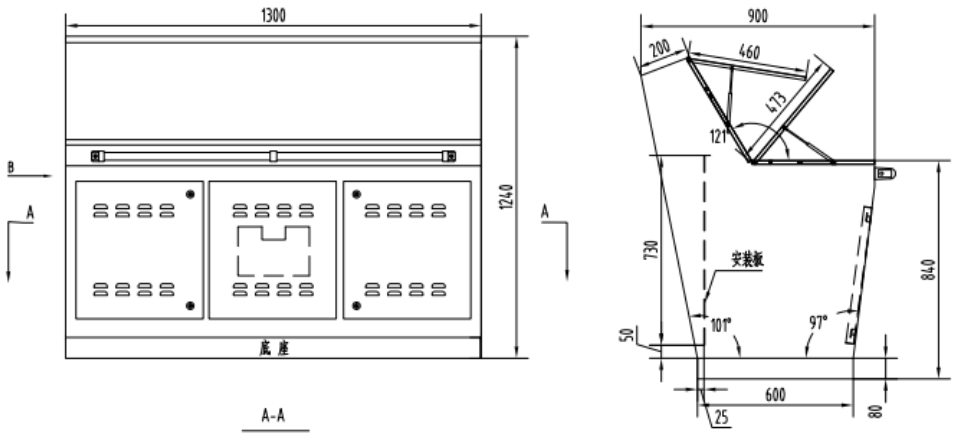

图 2.4.2 升降中控台外形示意图

Figure 2.4.2 Outline of the central control station

集中控制台操作区域如图 2.4.4 所示，升降操作详见 3.2 升降操作。

The operation area of the central control station is shown in Figure2.4.4. For the jacking operation, see 3.2 Jacking Operation.

2.4.2 上面板 The upper panel

上面板为集中控制台的主监控区，面板具体布置如下图所示：

The upper panel is the main monitoring area of central control station, the upper panel is shown as follows:

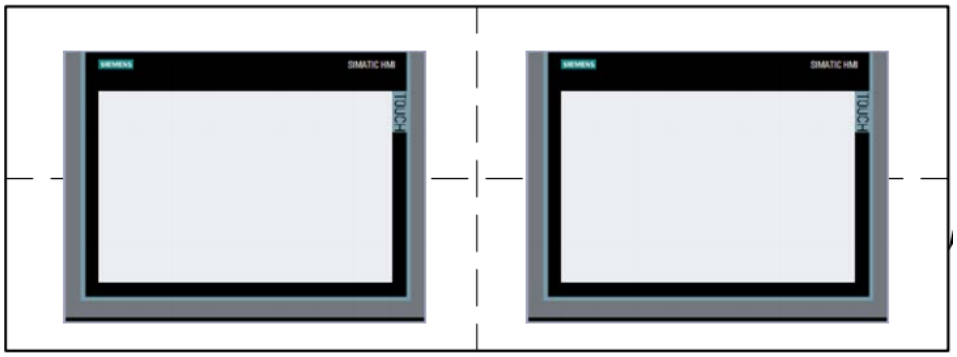

图 2.4.3 集中控制台上面板布置图

Fig.2.4.3 Central control station upper panel arrangement diagram

上面板一个两个触摸屏，主要用来监控电控系统与平台状态，例如电机状态，平台升降高度，各个传感器参数等；同时可以设定升降系统参数，例如设定转矩（用于 RE-TORQUE），设定各个传感器上下限报警值等；电子水平仪显示也集中在触摸屏中，实时显示平台的倾斜角度。

The upper panel has two touch screens, mainly used to monitor the electronic control system and platform status, such as motor status, the height of the hull lifting, each sensor parameter, etc. At the same time, you can set the jacking system parameters, such as setting torque (for RE-TORQUE), setting the upper and lower alarm values of each sensor, etc. The electronic level display is also concentrated in the touch screen to display the slope angle of the platform in real time.

2.4.3 中面板 The middle panel

中面板为集中控制台的主操作区，面板布置如下图所示：

The middle panel is the main operation area of central control station, and the panel layout

is shown as follows:

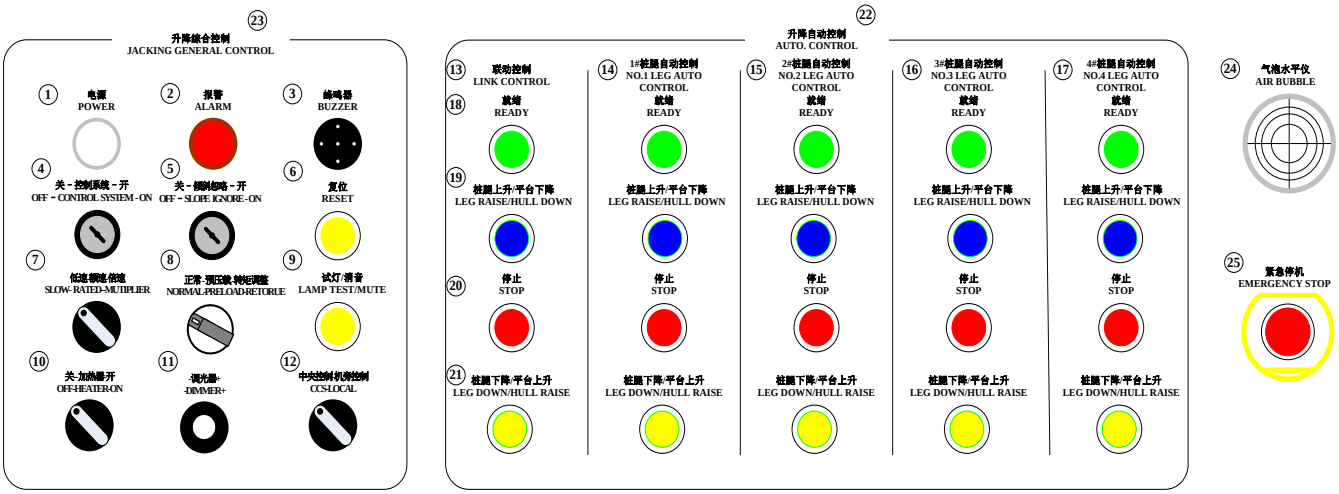

图 2.4.4 集中控制台中面板布置图

Fig2.4.4 Central control station middle panel arrangement diagram

中面板布置图中各序号对应的功能如下表所示：

The functions corresponding to each serial number in the middle panel layout are shown in the following table:

编号 Number	铭牌 Nameplate	设备 Device	功能说明 Function
NO.1	电源 POWER	白色指示灯 white lamp	电源指示 power supply indicators
NO.2	报警 ALARM	红色指示灯 red lamp	系统出现故障时指示灯闪烁，当消音后指示灯常亮直至全部故障消失 When the system is faulty, the indicator blinks. When the sound is silenced, the indicator is steady on until all the faults disappear
NO.3	蜂鸣器 BUZZER	蜂鸣器 buzzer	系统出现故障时蜂鸣器发出响声提醒操作人员，当消音后蜂鸣器静音。 When the system is faulty, the buzzer sounds to remind the operator. After the buzzer is silenced, the buzzer is muted.
NO.4	关-控制系统-开 OFF-CONTROL	2 档钥匙开关 2 gear key	只有当控制系统打开后，面板控制才有效 Panel controls are effective only when

	SYSTEM-ON	switches	the control system is turned on
NO.5	关-倾斜忽略-开 OFF-SLOPE IGNORE-ON	2 档钥匙开关 2 gear key switches	出现倾斜报警无法继续动作时，人为判断故障对系统无影响，选择倾斜忽略继续动作。When the tilt alarm cannot continue, the human judge that the fault has no impact on the system, and choose to tilt and ignore the continue action.
NO.6	复位 RESET	黄色按钮 Yellow button	故障复位，当出现自锁报警，报警消失后需要按下复位按钮，解除自锁。 Fault reset, when the self-locking alarm occurs, after the alarm disappears, you need to press the reset button to release the self-locking.
NO.7	低速-额速-倍速 SLOW-RATED-MULTIPLIER	3 档选择开关 3 gear selector switch	速度选择开关，低速速度约 0.1m/min，额速约为 0.6m/min，倍速约为 1.0m/min。Speed selection switch, low speed is about 0.1m/min, rated speed is about 0.6m/min, multiplier speed is about 1.0m/min.
NO.8	正常-预压载-转矩调整- NORMAL-PRELOAD-RETORQUE	3 档选择开关 3 gear selector switch	实现升降系统各工况的选择 To achieve the lifting system of each working condition selection
NO.9	试灯/消音 LAMP TEST/MUTE	黄色按钮 Yellow button	检查所有指示灯及带灯按钮，出现故障，蜂鸣器报警，按下按钮，消除声音，报警灯常亮 Check all the indicators and buttons with lights, there is a fault, the buzzer alarm, press the button, eliminate the sound, the alarm light is steady on
NO.10	关-加热器-开 OFF-HEATER-ON	2 档选择开关 2 gear selector switch	开关电机加热器、变频柜加热器、制动电阻加热器。 Switching motor heater, variable frequency cabinet heater, brake resistance heater.
NO.11	-调光+-DIMMER +	调光旋钮	调节指示灯的亮度

		Dimming knob	Adjust the indicator brightness
NO.12	中央控制-机旁控制 C.C.S.-LOCAL	2 档选择开关 2 gear selector switch	切换控制位置 Switch control position
NO.13	联动控制 LINK CONTROL	/	铭牌指示 Nameplate indication
NO.14	1#桩腿自动控制 NO1LEG AUTO.CONTROL	/	铭牌指示 Nameplate indication
NO.15	2#柱腿自动控制 NO2 LEG AUTO.CONTROL	/	铭牌指示 Nameplate indication
NO.16	3#桩腿自动控制 NO3 LEG AUTO.CONTROL	/	铭牌指示 Nameplate indication
NO.17	4#桩腿自动控制 NO4 LEG AUTO.CONTROL	/	铭牌指示 Nameplate indication
NO.18	就绪 READY	绿色带灯按钮 Green button with light	联动或各桩腿的控制准备好 Link or control of each leg ready
NO.19	桩腿上升/平台下降 LEG RAISE/HULL DOWN	蓝色带灯按钮 Blue button with light	按下按钮，灯亮，桩腿上升/平台下降 Press the button, light up, leg up/platform down
NO.20	停止 STOP	红色按钮 red button	按下按钮，联动或单桩控制停止 Press the button to stop the link or single control
NO.21	桩腿下降/平台上升 LEG DOWN/HULL RAISE	黄色带灯按钮 Yellow button with light	按下按钮，灯亮，桩腿下降/平台上升 Press the button, light up, leg down/hull raise
NO.22	升降自动控制 AUTO.CONTROL	/	铭牌指示 Nameplate indication
NO.23	升降综合控制 JACKING GENERAL	/	铭牌指示 Nameplate indication

	CONTROL		
NO.24	气泡水平仪 AIR BUBBLE	气泡水平仪 AIR BUBBLE	量程 1°，量程 2° range 1°， range 2°
NO.25	紧急停机 EMERGENCY STOP	红色紧停按钮 Red emergency stop button	按下紧急停止按钮后，除 PLC 电源外，所有动力、控制电源失电，电磁制动器抱闸。 After pressing the emergency stop button, in addition to the PLC power supply, all power and control power is lost, electromagnetic brake lock.

注意！ **NOTICE!**	图中所示选择开关位置为开关“初始”位置！ The selection switch position shown in the figure is the "initial" position of the switch!
警告！ **WARNING!**	**“紧急停机”按钮只有在停机无效或其它威胁到船员安全或船体安全的情况下动作；按下按钮后，要及时旋起复位!** **The "Emergency stop" button should only be activated when the stop is invalid or otherwise threatens the safety of the crew or the safety of the ship; After pressing the button, turn up and reset in time!**
警告！ **WARNING!**	当“关-倾斜忽略-开”钥匙开关打到“开”时，平台将不受电子水平仪保护（倾斜角度无声光报警），请小心操作！ **When the "Off - Tilt ignore - on" key switch is hit to "On", the platform will not be protected by the electronic level (tilt Angle silent light alarm), please be careful!**
警告！ **WARNING!**	平台模式不允许选择倍速模式，否则会报“速度选择工况错误”，预压载模式强制为低速模式。每个桩腿变频器有两个整流模块。如果其中一个出现故障，则需要降容使用，在升平台时速度只能选择“额速”或“低速”。 **Platform mode is not allowed to select MULTIPLIER speed mode, otherwise "speed selection condition error" will be reported, and the PRELOAD modes are forced to be low speed mode. Each pile leg frequency converter has two rectifier modules. If one of them fails, it needs to be reduced in capacity, and the speed can only choose "rated speed"or "low speed" when hull raise the platform.**

2.4.4 机旁控制箱 Local control box

机旁控制箱安装于各桩附近，整船共 4 个，用于提供桩边本地操作。机旁控制箱可以实现单个制动器检查和释放功能、单腿应急操作功能等功能。

Local control boxes are installed near each pile, and there are 4 in the whole ship to provide local operation at the pile side. The control box beside the machine is equipped with a user operation panel, which can realize the functions of single brake inspection and release, single leg emergency operation.

机旁控制箱与升降集控台在操作状态时互锁，当升降集控台操作升降时，机旁控制箱只能监控，不能操作；当机旁控制箱操作时，升降集控台只能监控，不能操作。

The Local control box and the central control station are interlocked in the operating state. When the central control station operates the jacking, the side control box can only monitor but not operate. When the local control box is operated, the central control station can only monitor, but cannot operate.

参数 **parameter**	说明 **Description**
输入电源 input power	AC220V/DC24V
防护等级 protection	IP 56
尺寸(L×H×D) Size (L×H×D)	400*600*250mm
电缆连接 cable connection	填料函进线 Stuffing box into line
重量 weight	About 25KG
材料 materials	316L 不锈钢 316L stainless steel

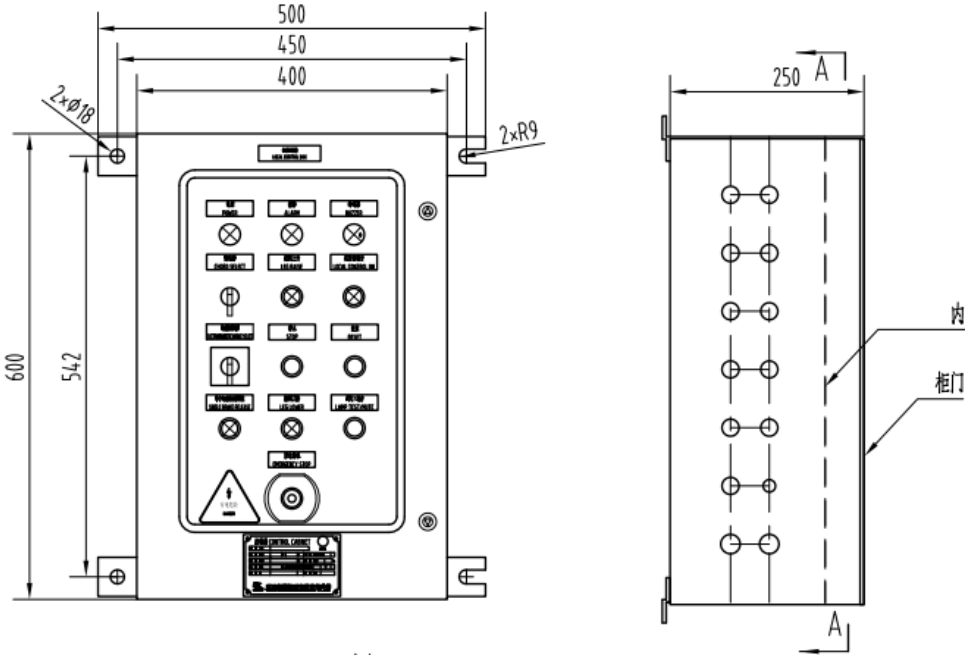

图 2.4.5 机旁控制箱外形示意图

Fig.2.4.5 Local control box panel arrangement diagram

机旁控制箱操作区域如图 2.4.6 所示，机旁升降操作详见 3.2.3 机旁控制作。

The operation area of the control box beside the motor brake selector is shown in Figure 2.4.6. For details about the operation of jacking and lifting beside the Local, see 3.2.3 Local operation.

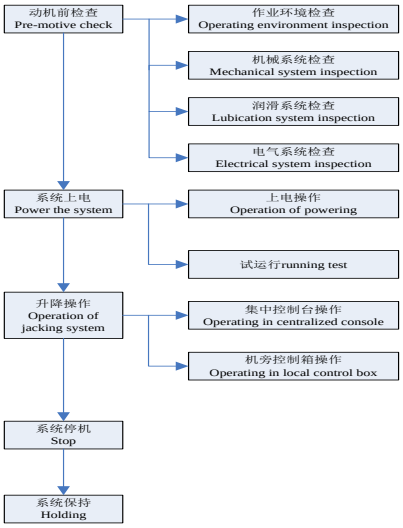

图 2.4.6 机旁控制箱操作面板

Fig2.4.6 the Local control box operation panel

编号 number	铭牌 Nameplate	设备 Device	功能说明 Function
NO.1	电源 POWER	白色指示灯 white lamp	电源指示 power supply indicators
NO.2	报警 ALARM	红色指示灯 red lamp	报警指示 Alarm indication
NO.3	蜂鸣器 BUZZER	蜂鸣器 buzzer	故障蜂鸣 Fault buzzer
NO.4	弦 选 择 CHORD SELECT	2 档选择开关 2 gear selector switch	配合电磁制动选择旋钮做单个制动释放打开 Cooperate with the ELECTROMAGNETIC BRAKE SELECT knob to do a single brake release to open
NO.5	桩腿上升/平台下降 LEG RAISE/HULL DOWN	蓝色带灯按钮 Blue button with light	按下此按钮，做桩腿上升/平台下降 Press this button to do the leg raise/platform lower
NO.6	机旁控制开	绿色带灯按钮	机旁控制触发

	LOCAL CONTROL ON	Green button with light	Local control triggers
NO.7	电磁刹车选择 ELECTROMAGNETIC BRAKE SELECT	7 档选择开关 7 gear selector switch	配合舷选择，在释放电机刹车时，电机刹车选择 With the board selection, the motor brake is selected when the motor brake is released
NO.8	停止 STOP	红色按钮 red button	按下按钮，单桩升降停止 Press the button to stop the single pile lifting
NO.9	复位 RESET	黄色按钮 Yellow button	机旁故障复位 Local fault reset
NO.10	单个刹释放 SINGLE BRAKE RELEASE	绿色带灯按钮 Green button with light	配合舷选择和刹车选择，按下此按钮，可以在机旁打开单个刹车。 With the side selection and brake selection, press this button to open a single brake at the side of the machine.
NO.11	桩腿下降/平台上升 LEG DOWN/HULL RAISE	黄色带灯按钮 Yellow button with light	按下此按钮，做桩腿下降/平台上升 Press this button to do the leg lower /platform raise
NO.12	试灯/消音 LAMP TEST/MUTE	黄色按钮 Yellow button	试灯和消音 Test the lights and silence the sound
NO.13	紧急停机 EMERGENCY STOP	急停按钮 emergency stop button	按下紧急停止按钮后，除 PLC 电源外，所有动力、控制电源失电，电磁制动器抱闸。 After pressing the emergency stop button, in addition to the PLC power

			supply, all power and control power is lost, electromagnetic brake lock.

2.4.5 桩腿控制单元 Leg control unit

桩腿控制单元安装在平台的艏尾升降电气设备间，每个电气设备间安装二个桩腿控制单元，主要作用是采集各桩腿的信息经过逻辑运算后输出控制指令给各执行机构。

Leg control units are installed in the forward and after jacking electrical equipment room, every jacking electrical equipment room has two leg control units; Its main function is to collect information of each leg and output control instruction to the execution after logic operation.

参数 **parameter**	说明 **Description**
输入电源 input power	AC220V 50HZ
防护等级 protection	IP 22
尺寸(L×H×D) Size (L×H×D)	1000*1800*600mm
电缆连接 cable connection	底部进线 cable inlet from bottom
重量 weight	About 250KG
颜色 colour	RAL7035

桩腿控制单元柜内元件布置如下图所示。

Leg control units inside arrangement are shown as follows:

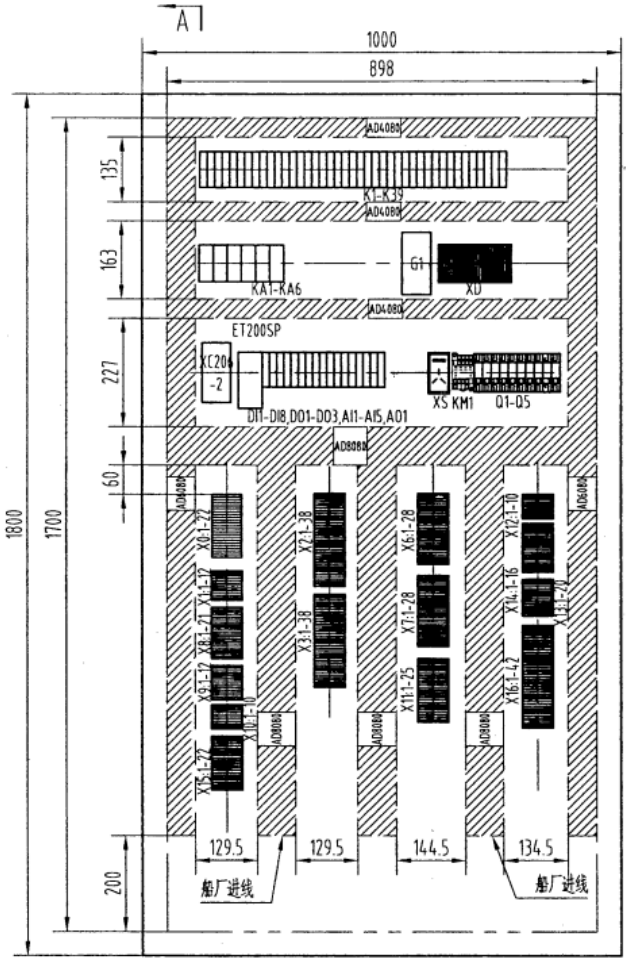

图 2.4.7 桩腿控制单元元件布置图

Fig 2.4.7 Leg control units inside arrangement diagram

- **Q1、Q4 断路器 Q1、Q4 breaker**

Q1、Q4 断路器为 PLC 系统供电，系统工作前必须合上。

Q1 breaker provides power to the PLC system, so it must be switched on.

- **Q2 断路器 Q2 breaker**

Q2 断路器为变频器、电机、制动电阻加热器供电，系统工作前必须合上。

Q2 circuit breaker supplies power to inverter, motor and brake resistance heater, and must be closed before system operation.

- **Q3 断路器 Q3 breaker**

Q3 断路器为电磁制动器供电，系统工作前必须合上。Q3 电源由变频器提供，在合闸 Q3 前需要给变频器上电。

Q3 circuit breaker supplies power to the electromagnetic brake and must be closed before system operation.Q3 power is provided by the VFD, which needs to be powered on before closing Q3.

- **Q5 断路器 Q5 breaker**

Q5 断路器为变频器提供控制电源，系统工作前必须合上。

The Q5 circuit breaker provides control power for the VFD and must be closed before the system works.

2.4.6 移相变压器 phase-shifting transformer

全船配置 2 台 12 脉整流变压器，用于对 2 套变频控制柜供电，以降低变频控制系统对船体配电的谐波影响。变压器采用风冷冷却方式，风冷配备了一套温控系统，包含温控器、 风机及加热器等，具有向外部输出高温报警功能。移相变压器每相都有 PT100，可以监测其温度。当移相变压器温度每相温度超过 80℃，如果冷却风机本地控制箱上为非手动模式，冷却风机会自动启动。当然也可以提前在控制箱上手动启动风机，但需要注意当想停止风机运行，需要手动关闭，使其恢复自动模式。

The ship is equipped with 2 12-pulse rectifier transformers, which are used to supply power to 2 sets of frequency conversion control cabinets to reduce the harmonic influence of frequency conversion control system on ship distribution. The transformer adopts the air-cooled cooling method, and the air-cooled is equipped with a set of temperature control system, including temperature controller, fan and heater, etc., which has the function of output high temperature alarm to the outside. The phase-shifting transformer has PT100 in each phase and can monitor its temperature. When the temperature of each phase of the phase-shifting transformer exceeds 80 ° C, the cooling air will automatically start if the local control box of the cooling fan is in non-manual mode. Of course, you can also manually start the fan on the control box in advance, but it needs to be noted that when you want to stop the fan operation, you need to manually close it to restore the automatic mode.

参数 **parameter**	说明 **Description**
额定容量 rated capacity	700kVA
额定电压 Rated Voltage	690V/2×420V
额定频率 rated frequency	50Hz
连接方式 connection type	Dyd (±7.5°)
防护等级 protection	IP23
加热器 heater	400W AC220V
尺寸(L×H×D)size	1950×1950×1550mm
重量 weight	2500kg
颜色 colour	RAL7035

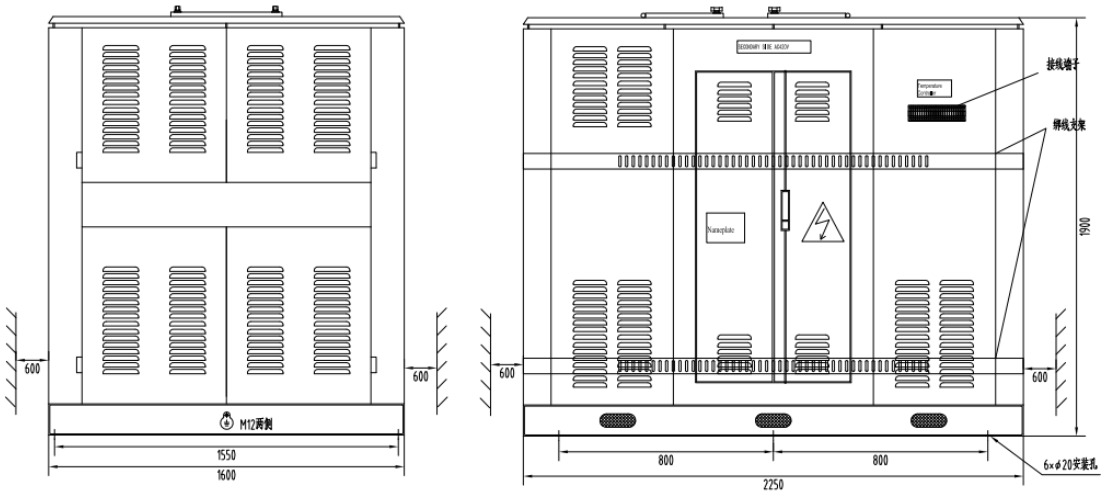

图 2.4.8 移相变压器外形示意图

Fig 2.4.8 Outline of phase-shifting transformer

2.4.7 制动电阻柜 Brake resistor cabinet

为了消耗平台下降时的再生能量，全船配备两个风冷制动电阻器，每个额定功率 80KW，三相总计 240KW，强制风冷。电阻管及箱体外壳材料均采用 316L 不锈钢。使用升降系统时，注意如果制动电阻温度高于 40℃，风机不自动运行时，风机可在手动控制界面强制风机运行。

In order to consume the regeneration energy when the platform drops, the whole ship is equipped with two air-cooled brake resistors, each with a rated power of 80KW, three-phase total of 480KW, forced air cooling. Use 316L stainless steel as the resistance pipe and cabinet shell material. When using the jacking system, note that if the brake resistance temperature is higher than 40℃ and the fan does not run automatically, the fan can manually control the interface to force the fan to run.

参数 **parameter**	说明 **Description**
额定功率 rated power	240KW(80kW×3)
电阻值 resistance	2Ohm×3
工作电压 Working voltage	700VDC
加热器 heater	90W
防护等级 protection	IP56
重量 weight	720kg
尺寸(L×H×D) size	1980×1176×1628mm

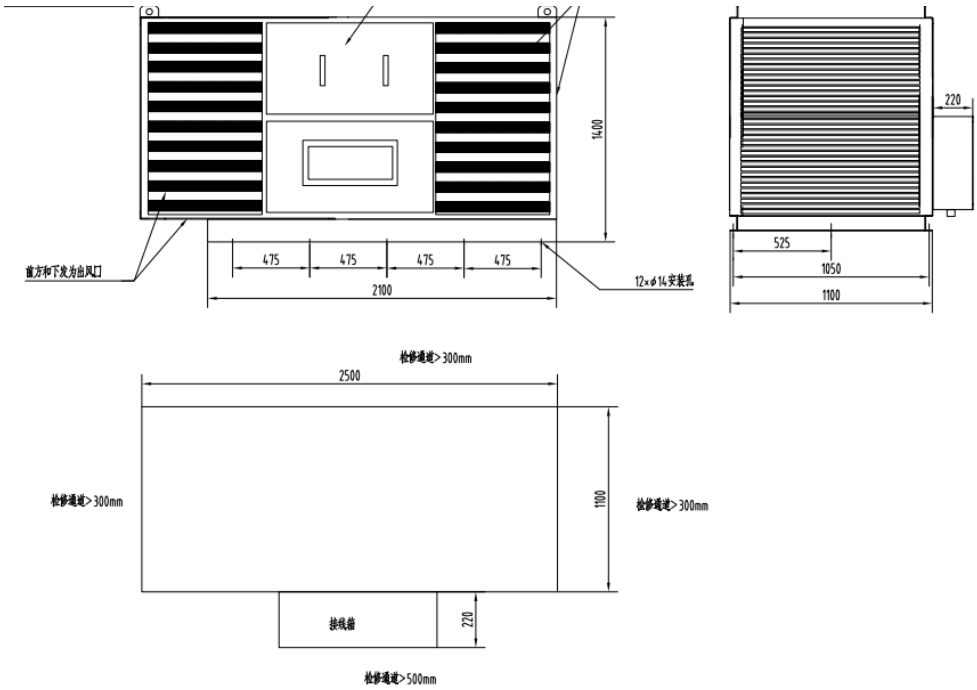

图 2.4.9 制动电阻外形示意图

Fig 2.4.9 Outline of brake resistance

2.4.8 变频电源柜 The VFD Cabinet

升降控制系统包含 2 套变频电源柜，每套变频电源柜包含 24 台独立逆变器，每台逆变器驱动一台电机，即每个变频器可同时驱动 2 条桩腿上的 24 台电机。采用二极管的整流前端、内置绝缘监控装置、输入 LCL 滤波器、Profinet 总线通信、常用直流母线柜及配套相应斩波单元，将平台下降时产生的逆功率由制动电阻消耗。2 套变频供电柜安装在升降电气设备间。

The jacking control system contains 2 sets of variable frequency power supply cabinet, each set of variable frequency power supply cabinet contains 24 independent inverters, each inverter drives a motor, that is, each VFD can drive 24 motors on two legs at the same time. Rectifier front end of diode, built-in insulation monitoring device, input LCL filter, Profinet bus communication, common DC bus cabinet and matching corresponding chopping unit to consume the reverse power generated when the platform falls by the brake resistance. 2 sets of variable frequency power supply cabinets are arranged in jacking electrical equipment room.

单套参数 **Single set of parameters**	说明 **Description**
电压及频率 voltage and frequency response	400V，50Hz
逆变功率 Inverter power	37KW×24
整流方式 rectifier type	二极管整流 diode rectification
电机控制方式 Motor control mode	闭环矢量控制 Closed loop vector control
通讯方式 communication mode	Profinet IO
防护等级 protection	IP22
环境温度 environment temperature	0 ℃ to +50 ℃，无凝霜 no frost allowed +40 ℃ to 50 ℃ 降容 capacity reduction 1%/1℃
电缆连接 cable connection	底进底出 Bottom in, bottom out
外形尺寸(L×H×D)	5830×2042×600mm
重量	3680kg
颜色	RAL7035

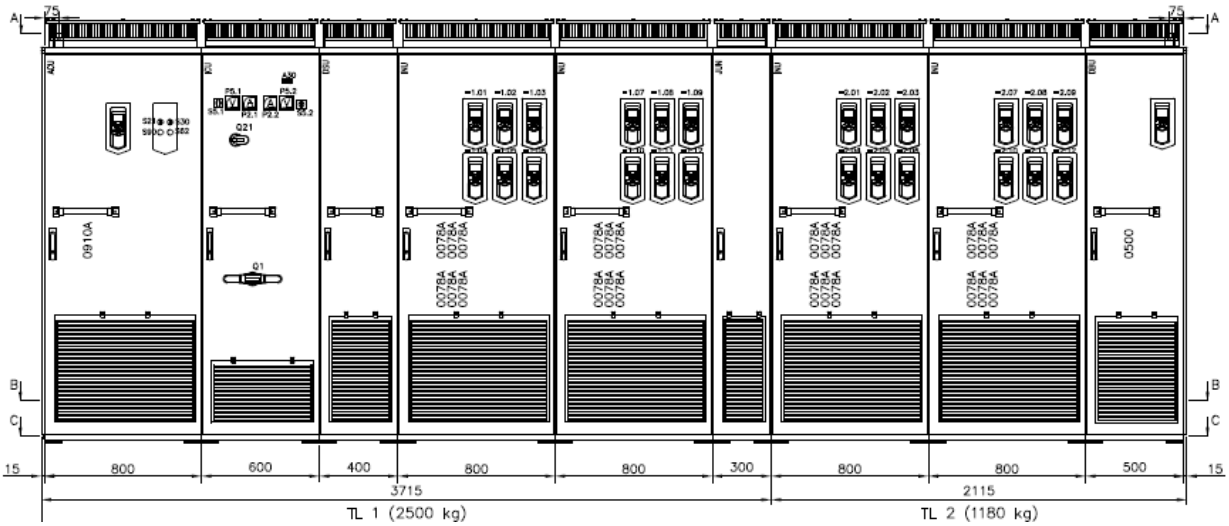

图 2.4.10 变频电源柜外形示意图

Fig 2.4.10 Outline of inverter power cabinet

⚠警告！ **WARNING!**	**未在厂家指导授权下，不要私自更改 VFD 设置。这会导致意想不到的危险。** **Do not change the VFD Settings without the manufacturer's guidance and authorization. This can lead to unexpected dangers.**

VFD 的上电步骤如下：

1) 桩腿控制单元柜内 Q5 闭合，给变频器供控制电源，

2) 配电板给变频器供主电源;

3) 变频电源柜门上 Q21 闭合(手柄垂直)，控制电上电。

4) 电源电源柜门主断路器 Q1 闭合(手柄垂直)，主电源上电。

5) 本地模式，打开 S21 开关；或者远程模式在触摸屏上合闸整流，让整流工作。

The power on step of the VFD is as below:

1) Close Q5 in the leg control unit cabinet to supply control power to the inverter.

2) The main switchboard supplies the main power to the VFD;

3) Close Q21 on the variable frequency power cabinet door (handle is vertical), and power on the control.

4) Power supply The main circuit breaker Q1 of the power cabinet door is closed (handle is vertical), and the main power supply is powered on.

5) In local mode, close the S21 switch; Or remote mode on the touch screen to close the rectifier, let the rectifier work.

VFD 的断电步骤如下：

1) 本地模式，关闭 S21 开关；或者远程模式在触摸屏上分闸整流，让整流停止工作。

2) 电源电源柜门主断路器 Q1 断开(手柄水平)，主电源关电。

3) 变频电源柜门上 Q21 断开(手柄水平)，控制电关电。

The steps for powering off the VFD are as follows:

1) In local mode, turn off the S21 switch; Or the remote mode switches the rectifier on the touch screen to stop the rectifier from working.

2) Power supply The main circuit breaker of the power cabinet door Q1 is turned off (handle level), and the main power supply is turned off.

3) Inverter power cabinet door Q21 disconnect (handle level), control power off.

2.4.9 触摸屏 Touch screen

触摸屏是升降系统与操作人员交互的重要工具，操作员能够对升降系统的参数进行设置，升降系统能够通过触摸屏反馈系统信息给操作员。触摸屏主要包括主界面、各桩腿界面、报警界面、历史记录界面和参数设置画面。升降系统有两个同样的触摸屏，下面将介

绍升降系统的主要功能。

The touch screen is an important tool for the jacking system to interact with the operator. The operator can set the parameters of the jacking system, and the jacking system can feedback the system information to the operator through the touch screen. The touch screen mainly includes the main interface, the pile leg interface, the alarm interface, the history interface and the parameter setting screen. The jacking system has two identical touch screens, and the main functions of the jacking system will be introduced below.

2.4.10 主界面 Home

主界面是升降系统的主要监控窗口，可以监控整个平台 4 条桩腿的主要运行数据，其中包括：工作模式、倾斜角度、操作权限、桩腿升降速度、桩腿位移、平台负荷等。

Home is the main monitor window, and it shows the main data of four legs, we can observe main real-time running parameters of each leg, such as working mode, slope angle, control position, leg speed, leg distance, and leg load and so on.

2.4.11 桩腿界面 Leg Window

各桩腿的监控窗口主要显示：显示变频器状态、各电机电流、速度、转矩、各升降单元负载、腿总负荷，升降速度等。

The monitoring window of each pile leg mainly displays: the status of the inverter, the current of each motor, the speed, the torque, the load of each lifting unit, the total load of the leg, the lifting speed,etc.

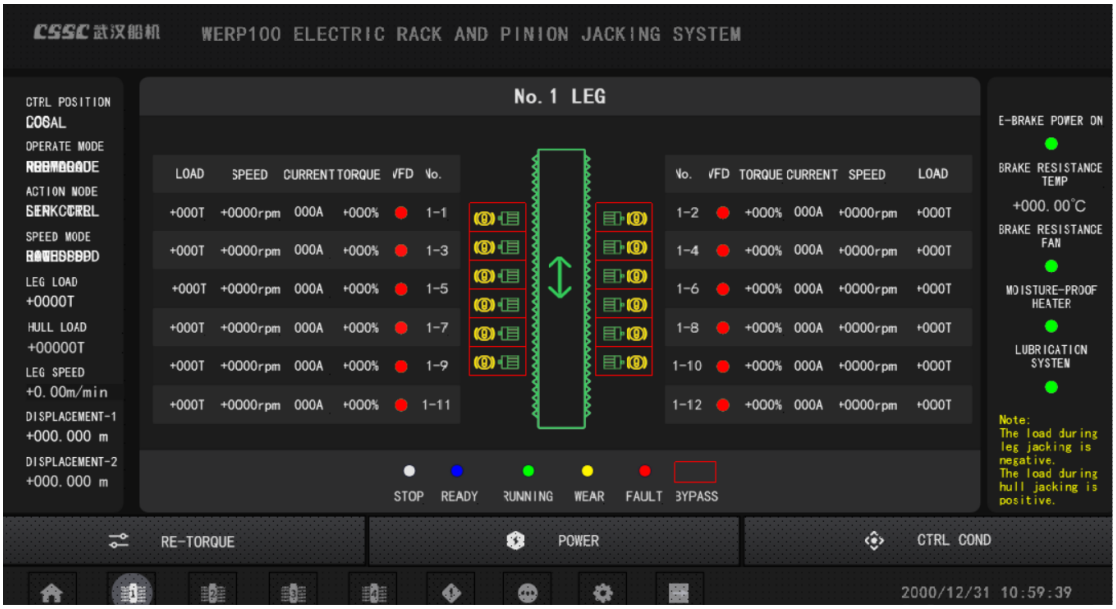

序号 NO.	设备 Equipment	符号 Display	备注 Remarks
1.	电机 motor		电机停止 Motor stop
2.			电机运行 Motor running
3.			电机过载 Motor overload alarm
4.	刹车 Electric brake		停止（刹车闭合） stop(electric brake close)
5.			刹车打开 electric brake open
6.			刹车故障报警 electric brake ineffective alarm
7.			刹车磨损需要维修 Electric brake needs maintenance

按下方的“ POWER ”按钮，可查看各腿变频器和主断路器情况，如下图所示。

Press the " POWER " button at the lower to view the frequency converter and

main circuit breaker of each leg, as shown in the following figure.

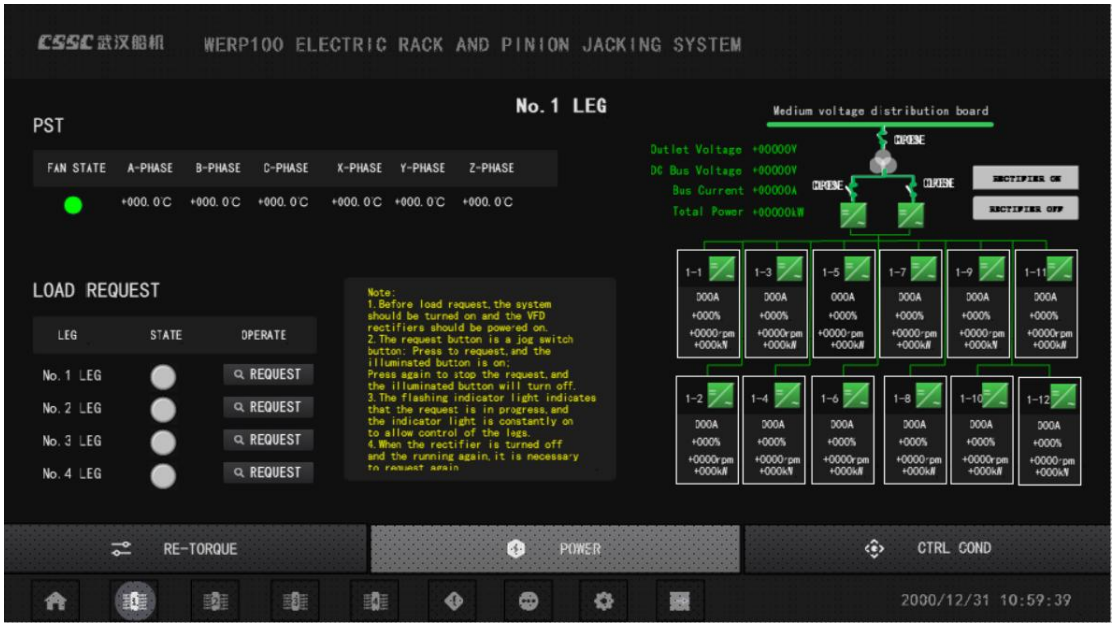

配电板和变频器断路器故障或断开时，状态显示为“ ”，断路器接通时，状态显示为“ ”。

When the switchboard and inverter circuit breakers are faulty or disconnected, the status is displayed as " ", and when the circuit breakers are connected, the status is displayed as" ".

电气单线图上还可以观察整流工作状态、整流电流、功率、各逆变单元电流、转矩、速度、功率。

On the electrical single line diagram, you can also observe the working state of the rectifier, the rectifier current, the power, the local/remote of each inverter module, the parameter set, the current, the torque, the speed, the power.

2.4.12 电机转矩调整 Retorque

当控制模式为选择 RETORQUE 时，按下

按钮即进入 RETORQUE 状态。

When the control mode selects the “RETORQUE”, now pressing the button

enters into re-torque interface.

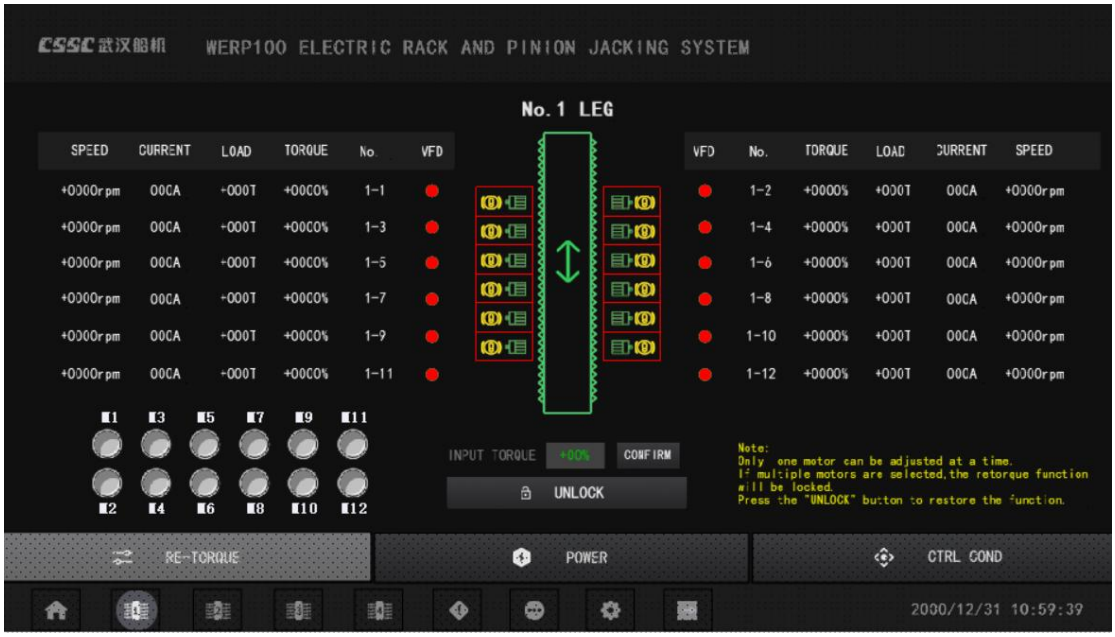

RETORQUE 界面由两部分组成，上半部分显示的是每条腿升降单元的具体状态显示，底部部分为电机转矩设置部分，按下按钮 6 选择需要进行“RETORQUE”的电机，当被选电机有效时，指示灯变绿 M6，操作者可以通过在 +00% 区域来设置具体转矩值，当设置完成后按确认按钮 CONFIRM。

Retorque window has two parts, the upper part is the state display of the leg, the lower part is the retorque set part, press motor button 6 which needs retorque, it turns to green M6 when it is chosen, and set torque value at the area +00%, when it is finished press enter button CONFIRM until the load of the jacking unit not change obviously.

输入转矩与输出负载的对应关系如下:

The corresponding relation between the input torque and output load as bellow:

桩腿状态 **Leg condition**	推荐给定转矩 **Given torque**	**Corresponding load** 对应载荷
平台模式（桩腿已触底） Platform mode (leg bottomed)	-50%	About 100T
桩腿模式（桩腿未触底） Leg mode (leg not touch the bottom)	10%	About -20T

操作者可根据上述比例关系输入合适的转矩值。

The operator can input the appropriate torque value which can refer to the above

proportional relation.

NOTICE!	当桩腿某一升降单元出现载荷不均衡时，需要按上表进行转矩设定，实现升降单元的均载。 Note: When the load of a lifting unit of the pile leg is unbalanced, the torque needs to be set according to the table above to achieve the equal load of the lifting unit. 注意平台模式载荷为正，给定转矩设置为负。 Note that the platform mode load is positive and the given torque is set to negative.

2.4.13 控制条件 The Control Condition

为便于操作人员在操作前判断系统是否可以正常启动，本系统制作了各桩腿的“控制条件”界面，只有当如下图所示的条件满足后（条件满足箭头和方框会变成绿色，反之则为灰色），升降系统的升降操作才可以正常进行；若条件不满足，则需要进行相应检查处理。

In order to facilitate the operator to judge whether the system can start normally before operation, the system makes the "control condition" interface of each pile leg. Only when the conditions shown in the following figure are met (if the conditions are met, the arrow and box will turn green, and the reverse will be gray), the jacking operation of the jacking system can be carried out normally. If the conditions are not met, perform corresponding checks.

为了便于操作人员知道是什么停机或快停报警点导致的停机，在界面下方做了一个停机报警的列表，操作人员可以很清晰的识别出停机的故障点，进而做相应的检查。

In order to facilitate the operator to know what stop or quick stop alarm point caused the stop, a stop alarm state is made at the left of the interface, so that the operator can clearly identify the fault point of the stop, and then do the corresponding inspection.Red indicates an alarm and green indicates normal.

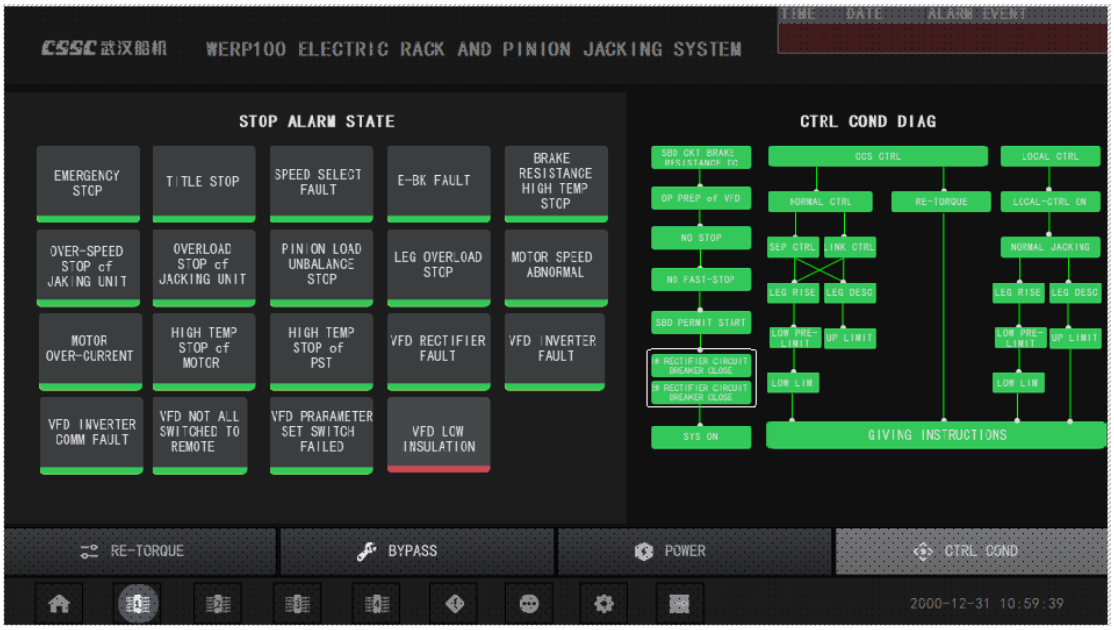

2.4.14 重载问询 Heavy Request

在每个桩腿界面，点击“POWER”按钮，进入升降系统重载问询界面。每条桩腿一路重载问询信号。

In each pile-leg interface, click the "POWER" button to enter the jacking system reload inquiry interface. One heavy inquiry signal on each leg.

重载问询前需要满足如下条件：

The following conditions must be met before reloading the query:

1、“系统开”选择开；the “OFF-CONTROL SYSTEM-ON”switch should be turned on;

2、变频器整流合闸上电。the VFD rectifiers should be powered on.

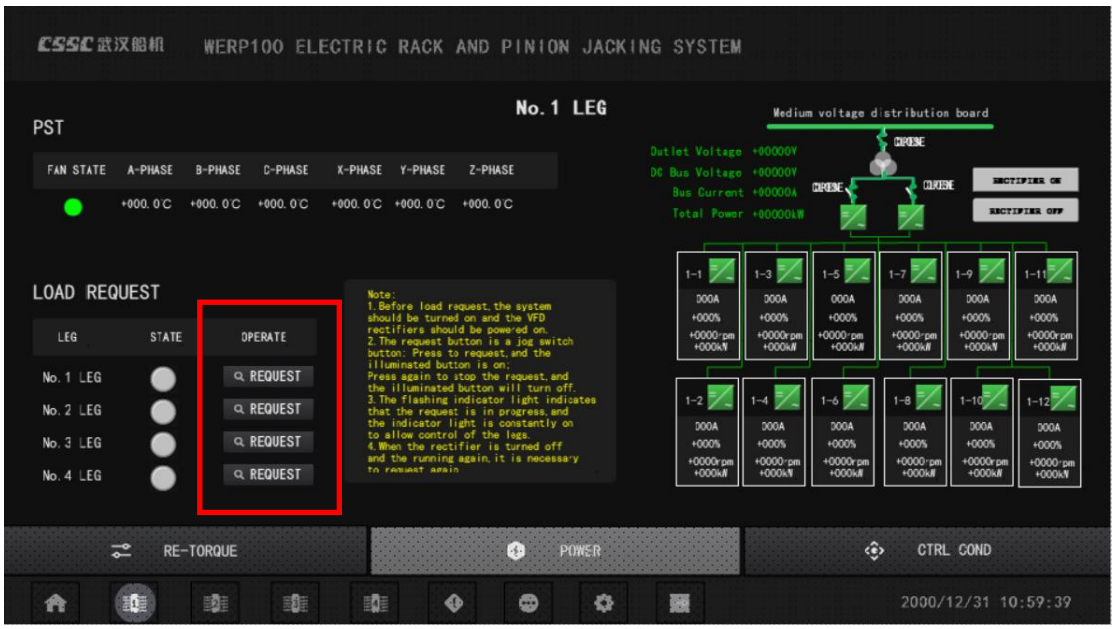

⚠ NOTICE!	1、问询按钮为点动切换按钮，点一次问询，再点一次停止问询，正在问询时允许指示灯闪烁。 2、指示灯闪烁表示重载问询正在进行中，指示灯持续亮起，允许启动。 3、整流关闭后再运行时需要重新重载问询。 1, The inquiry button is a jog switch button: Press to inquire,and the illuminated button is on;Press again to stop the inquiry,and the illuminated button will turn off. 2,The flashing indicator light indicates that the inquiry is in progress,and the indicator light is constantly on to allow control of the legs. 3,When the rectifier is turned off and the running again,it is necessary to request again.

2.4.15 故障越控 Bypass function

在每个桩腿界面按下“Bypass”按钮后，进入故障越控功能。

In each pile-leg interface, click the "Bypass" button to enter the jacking system bypass function interface.

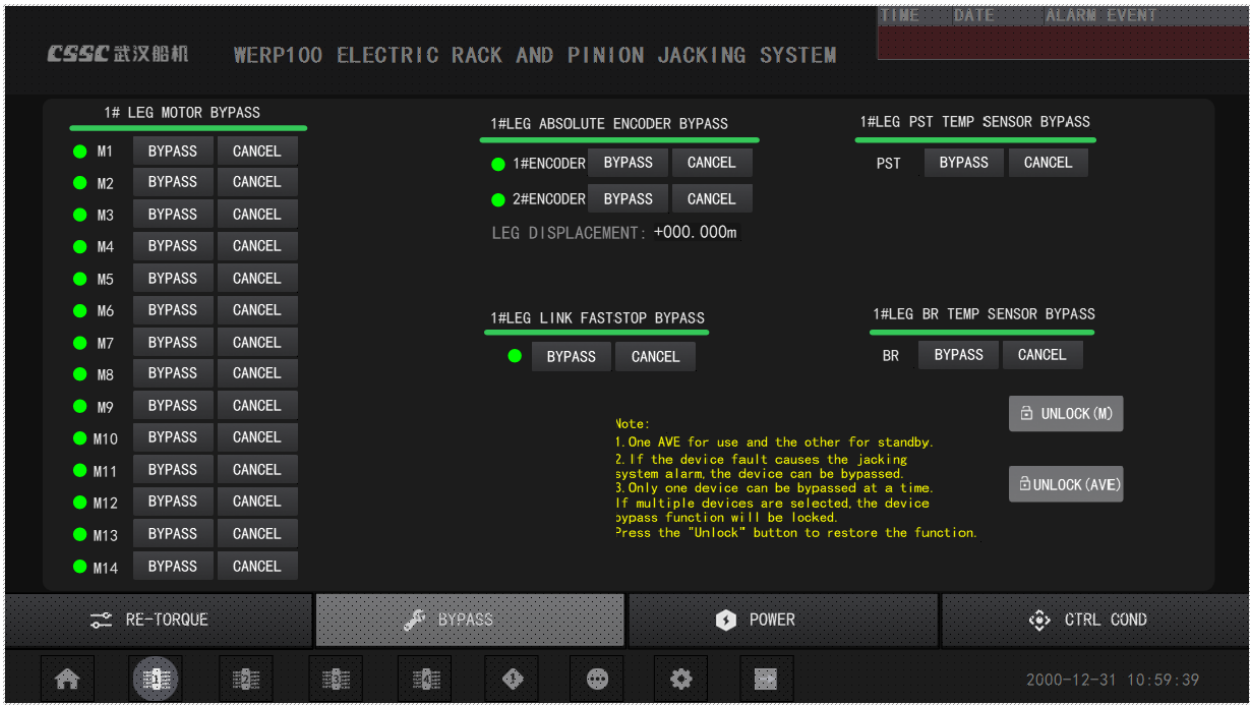

1.电机故障越控 motor bypass function

当需要越控哪个电机时，直接按下对应电机的 BYPASS 按钮，当电机被越控时，电机的相应指示灯会变绿，否则将还是灰色，当操作者想取消时，可以按下 CANCEL 按钮，电机的“越控功能”将不起作用。

Press button BYPASS which motor needs pass-by, when the motor is pass-by, the corresponding lamp is green, otherwise it is gray ;and when the operator want to cancel it, you can press the CANCEL, then the “motor override” function will not work.

警告！ WARNING!	**1、单桩只允许旁通一个升降单元；** **2、当变频器、电机或电磁制动器故障无法修复且的确需要升降桩腿或平台时，可以使用故障旁通功能；** **3、故障旁通时，电磁制动器被强制打开，变频器、电机、电磁制动器故障均被屏蔽，操作人员需去机旁注意观察被旁通电磁制动器、电机状态；** **4、故障旁通操作为危险操作，若不在机旁注意观察，容易引起设备甚至平台危险。** **5、当同时选择个电机旁通时，可以通过点击UNLOCK (M)按钮，取消旁通选择。** **1. A single leg is only allowed to bypass one jacking unit;** **2. When the inverter, motor or electromagnetic brake failure can not be repaired in time and the jacking system requires action, you can use the motor bypass function;** **3. Motor bypass, the electromagnetic brake is forced to open, the frequency converter, motor, electromagnetic brake faults are shielded, the operator needs to go to the machine to observe the bypass electromagnetic brake, motor status,To increase the safety factor, the operator can manually open the brake and lock it up;** **4. motor bypass operation is a dangerous operation, if not at the machine to pay attention to observation, easy to cause equipment and even platform danger.** **5. When selecting multiple motors by-pass at the same time, you can cancel the by-pass selection by clicking the button UNLOCK (M).**

2.绝对值编码器旁通 Absolute encoder bypass

每条桩腿有 2 个绝对值编码器，互为备用。1#编码器正常且没有旁通时，桩腿位移采用 1#编码器采集值，如果 1#编码器故障可以旁通 1#编码器，桩腿位移采用 2#编码器的值。当任意一个故障后，导致上下限位报警后，用户可以旁通故障绝对值编码器，并不影响系统的正常工作和保护，但需要及时更换故障编码器。单桩的 2 个编码器只允许旁通其中 1 个。

Each leg has two absolute encoders, which are complementary to each other. When the 1#

encoder is normal and there is no bypass, the displacement of the pile leg adopts the 1# encoder to collect the value. If the 1# encoder is faulty, the 1# encoder can be bypassed and the displacement of the pile leg adopts the value of the 2# encoder. When any fault causes the upper and lower limit alarm users can bypass the fault absolute encoder, which does not affect the normal operation and protection of the system, but the fault encoder needs to be replaced in time. Only one of the two encoders of a single pile can be bypassed.

当需要越控哪个编码器时，直接按下对应编码器的 BYPASS 按钮，当编码器被越控时，编码器的相应指示灯会变绿，否则将还是灰色，当操作者想取消时，可以按下 CANCEL 按钮，编码器的“越控功能”将不起作用。

Press button BYPASS which **absolute encoder** needs pass-by, when the **absolute encoder** is pass-by, the corresponding lamp is green , otherwise it is gray ;and when the operator want to cancel it, you can press the CANCEL, then the “**absolute encoder** override” function will not work.

3.联动快停旁通 Link fast stop bypass

1）本功能很危险，只有当某条桩腿故障，且此时平台需要紧急动其它桩腿时，才可以把故障桩腿的旁通打开，否则容易导致平台或人员的危险；

2）当故障解除后，一定要及时将所有旁通关掉；

3）其它情况禁止使用此功能。

1) This function is very dangerous. Only when a certain pile leg is faulty and the platform needs to move other pile legs urgently, the bypass of the faulty pile leg can be opened, otherwise it will easily lead to the danger of the platform or personnel;

2) When the fault is removed, be sure to turn off all bypass in time;

3) This function is prohibited in other cases.

4.高温停机报警旁通 high temperature alarm bypass

当制动电阻在高温下停止或移相变压器在高温下停止时，升降系统不能工作。如果报警是安全的，例如制动电阻和移相变压器的温度传感器 PT100 失效，则可以按下旁路按钮来屏蔽报警并继续运行。

When the brake resistance stops at a high temperature or the phase-shifting transformer stops at a high temperature, the jacking cannot operate. If the alarm is safe,for example, the temperature sensor PT100 of the brake resistor and phase-shifting transformer fail, , you can press the bypass button to mask the alarm and continue to operate.

2.4.16 设置界面 set interface

点击“ ”按钮，进入升降系统设置界面。

如果要进入“参数设置”界面，需要登录。

注：用户名：main；密码：265090。

Click " " button to enter the jacking system setting interface.

If you want to access the Parameter Settings page, log in to the system.

Note: Username: main; Password: 265090.

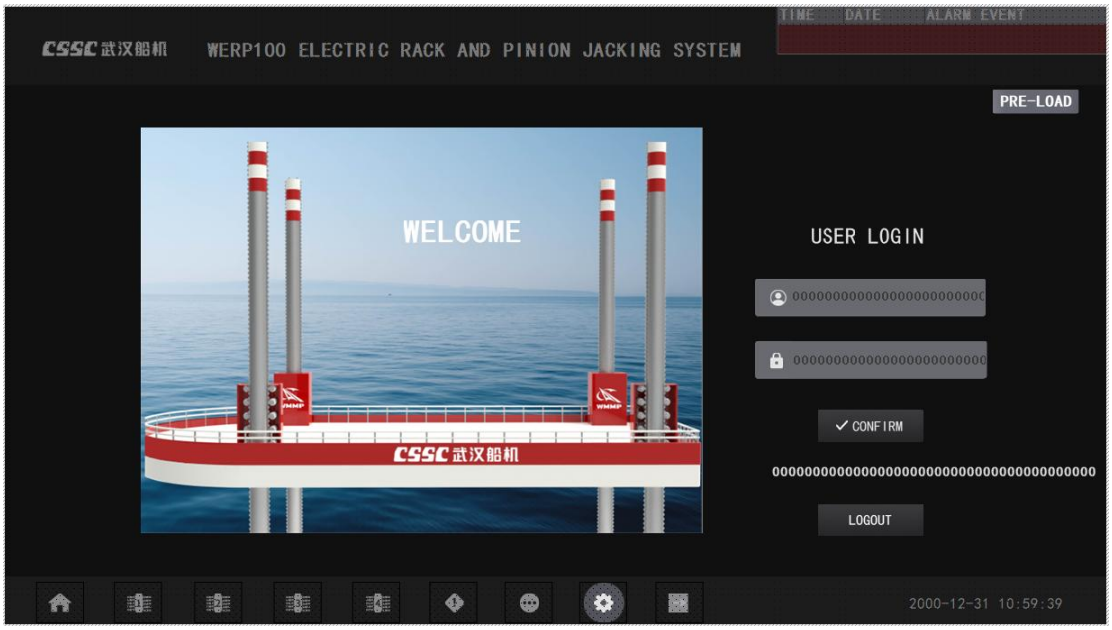

参数界面主要包括“参数校准”、“报警参数设置”、“负载系数设置”、“转速和转矩设置”等功能。

The parameter interface mainly includes the functions of "parameter calibration", "alarm parameter setting", "load factor setting", "speed&torque setting".

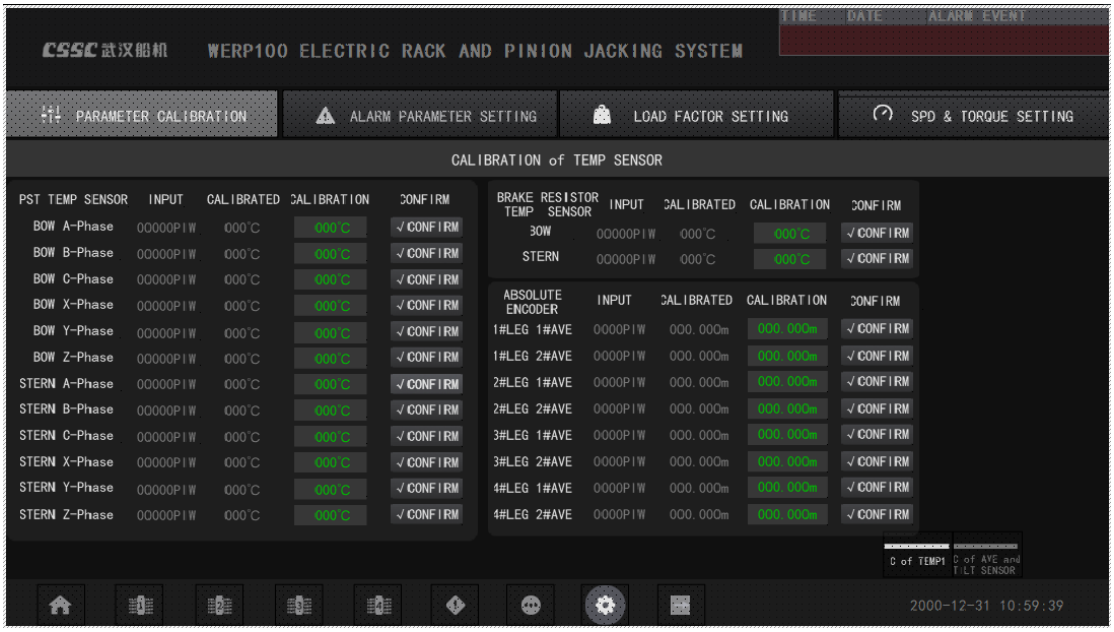

参数校准界面由三部分组成:一部分是 PT100 温度传感器的校准，另一部分是绝对编码器参数和倾斜角的校准(未经专业人员许可，请勿随意校准)。

The parameter calibration interface consists of three parts: one is the calibration of the PT100 temperature sensor, and the other part is the calibration of the parameter of the absolute encoder and the tilt Angle (do not calibrate at will without the permission of professionals).

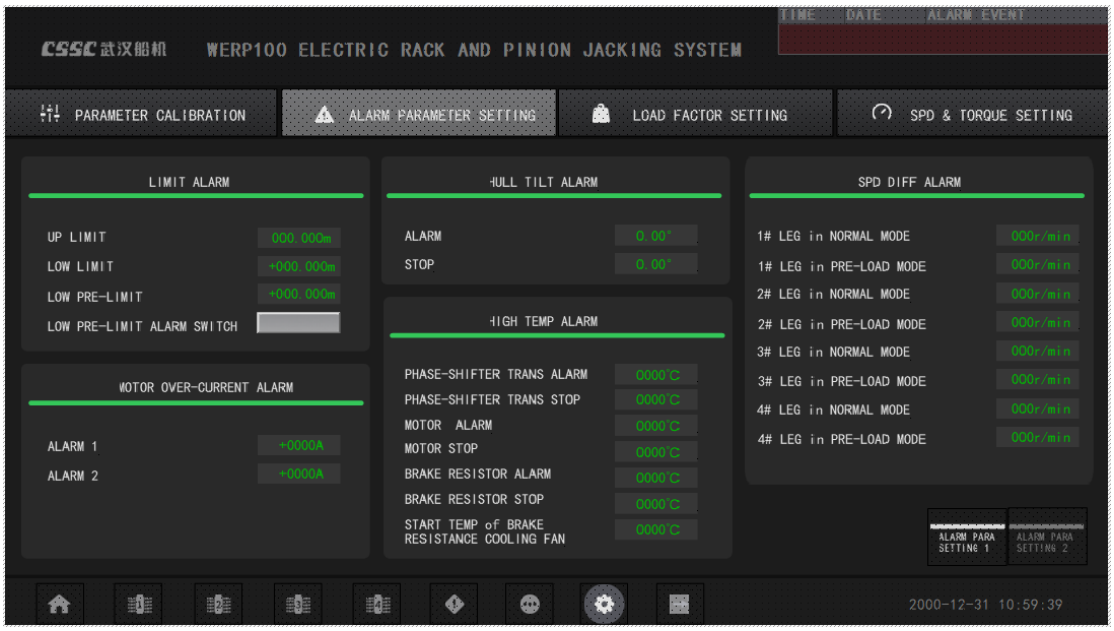

此窗口可设置升降系统的报警值，未经授权，不允许操作人员私自设置，否则将危及升降系统。

This window can set the alarm valve of the jacking system, without authorization, the operator is not allowed to set it up privately, otherwise the jacking system will be in danger.

NOTICE !	当出现制动电阻高温停机、变压器高温停机导致升降不能动作，在确认安全的情况下，可以通过按 bypass 界面上的 bypass 按钮，屏蔽此报警继续动作。比如制动电阻、移相变压器的温度传感器 PT100 故障，导致停机，在检查实际部件温度正常后，可以临时旁通。 或者桩腿绝对值编码器故障或者网络掉线，导致上下限超过限值，在升降系统确保正常的前提下(注意观察负载)，相应的编码器可以暂时旁路。 屏蔽后的报警注意及时恢复。 When the brake resistance stops at a high temperature or the transformer stops at a high temperature, the lifting and lifting cannot operate. If the alarm is safe, you can press the bypass button on the **bypass** interface to mask the alarm and continue to operate. For example, the temperature sensor PT100 of the brake resistance and phase-shifting transformer fails, resulting in downtime, and can be temporarily bypassing after checking the temperature of the actual parts. Or the absolute encoder of the pile leg is faulty or the network is offline, resulting in the upper and lower limit exceeding the limit. Under the premise that the jacking system is normal (pay attention to the load),the corresponding encoder can be temporarily by-passed. The alarm after shielding should be restored in time.

2.4.17 制动电阻风机强制运行 Brake Resistor Fan Force Running

当平台下降时，制动电阻会消耗再生能量。当平台下降或制动电阻温度高于40℃时，制动电阻风扇将自动运行。如果风扇未启动，可以在以下风扇手动控制界面强制风扇启动。

The brake resistance can consume the regenerative energy when the platform descends. When the platform descends or the brake resistance temperature is higher than 40℃, the brake resistance fan will automatically operate. If the fan does not start, you can force the fan to start on the following fan manual control screen.

当电阻器绝缘不良或其他需要强制风机运行的情况下，操作人员也可以进入该界面，将其切换到“ON”，不需要时将其切换到“OFF”。

When the resistor’s insulation is not good or other situation which need to force the fan keep running, the operator can also enter into this interface and switch it to ‘ON’, and switch it to ‘OFF’ when not need.

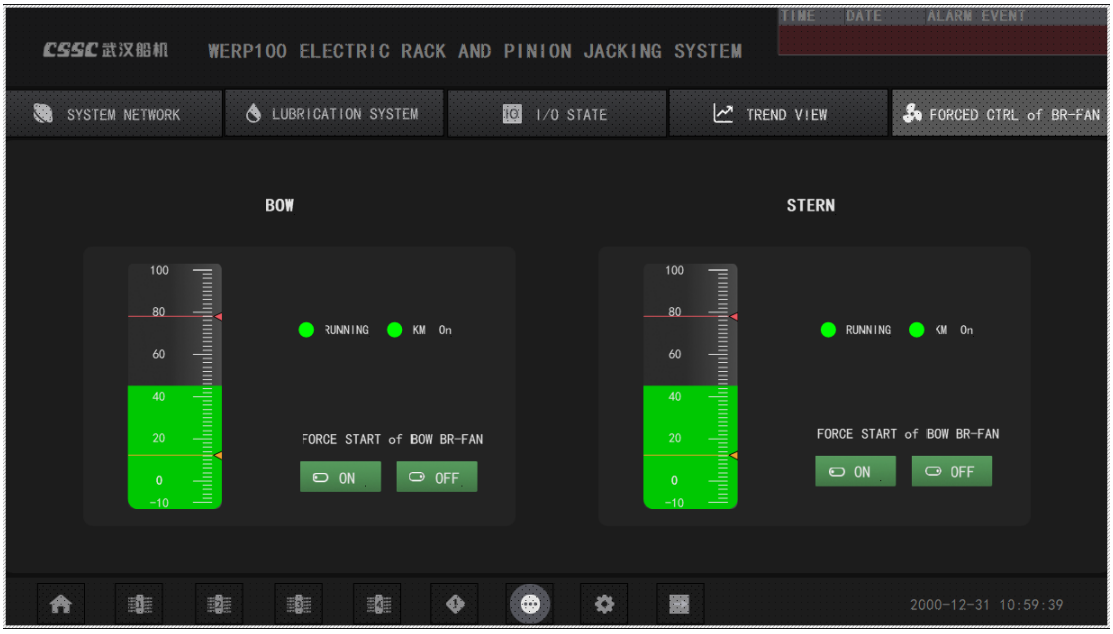

操作人员可以点击 ，然后点击“FORCED CTRL of BR-FAN”进入如上界面。

The operator can enter the and then enter the ‘FORCED CTRL of BR-FAN’ to enter into the interface as above.

2.4.18 历史记录 Data History

该窗口为操作人员提供实时曲线和历史记录，如电机速度，小齿轮负载，倾斜角度，位移等。操作人员可以根据这些历史记录分析升降系统的运行状态，以便分析故障原因。

This window provides the operator with real-time curves and historical records such as motor speed, pinion load, slope angle,displacement etc. The operator can analyze the operating state of the jacking according to these historical records in order to analyze the cause of failure.

升降系统具有数据历史记录功能，在触摸屏上插入 USB 接口即可保存数据。

The jacking system have the data history function, which can memory the data if insert an USB on the touch screen.

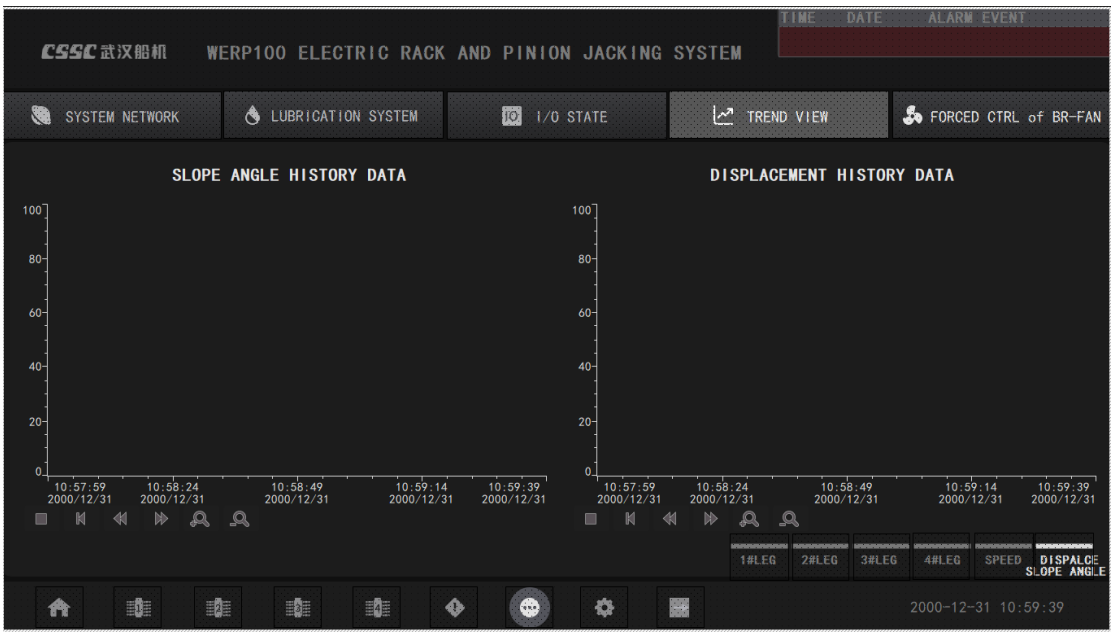

操作人员可以点击 ，然后点击“TREND VIEW”进入如上界面。

The operator can click the and then click the ‘TREND VIEW’ to enter into the interface as above.

2.4.19 润滑系统 lubrication system

本窗口为润滑系统控制界面，当润滑系统本地控制箱选择远程时，可以在升降触摸屏界面上进行启停控制。该界面润滑系统分为自动和手动两种模式。选择自动模式，升降系统动作时，润滑系统自动启动运行；选择手动模式，按下“手动启动”、“手动停止”可以启停润滑。

This window is the lubrication system control interface. When the local control box of the lubrication system is remote, the start and stop control can be performed on the lifting touch screen interface. The interface lubrication system is divided into two modes: automatic and manual. Select automatic mode, when the jacking system moves, the lubrication system automatically starts to run; Select manual mode, press "manual start", "manual stop" to start and stop lubrication.

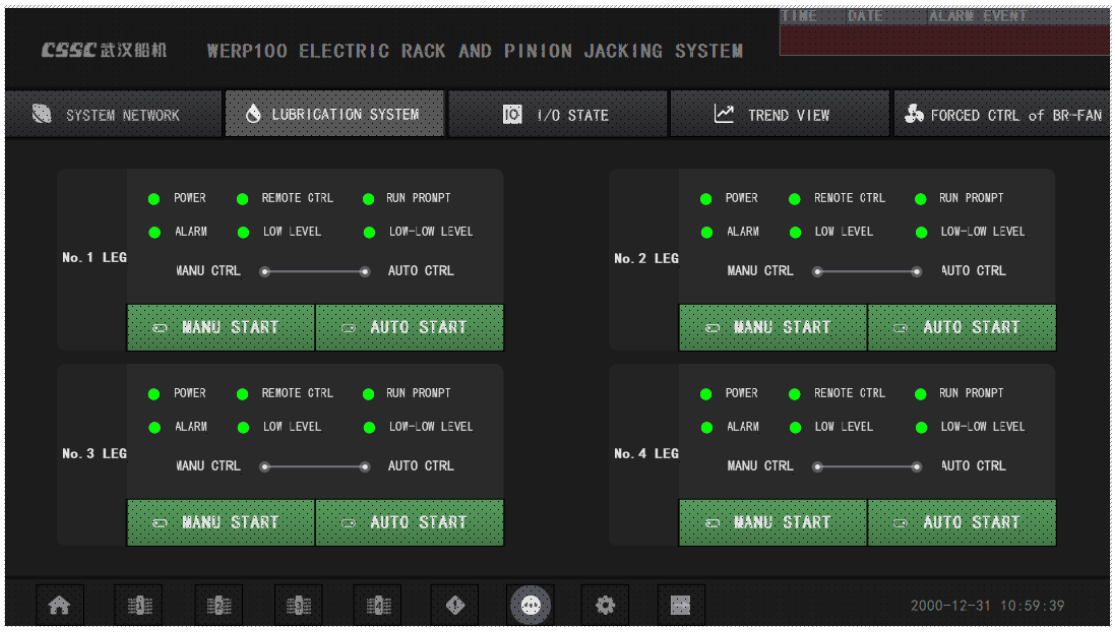

为了方便用户随时监控升降装置的状态，系统的触摸屏可以实时监控所有 PCL 的 I / O 点的状态，以便在遇到故障时分析故障原因。

In order to facilitate the user to monitor the state of the jacking device at all times, the touch screen of the system can monitor the state of the I / O point of all PCL in real time, so that the fault cause can be analyzed when the fault is encountered.

2.4.20 I/O 状态 I/O state

为了方便用户随时监控升降装置的状态，系统的触摸屏可以实时监控所有 PCL 的 I / O 点的状态，以便在遇到故障时分析故障原因。

In order to facilitate the user to monitor the state of the jacking device at all times, the touch screen of the system can monitor the state of the I / O point of all PCL in real time, so that the fault cause can be analyzed when the fault is encountered.

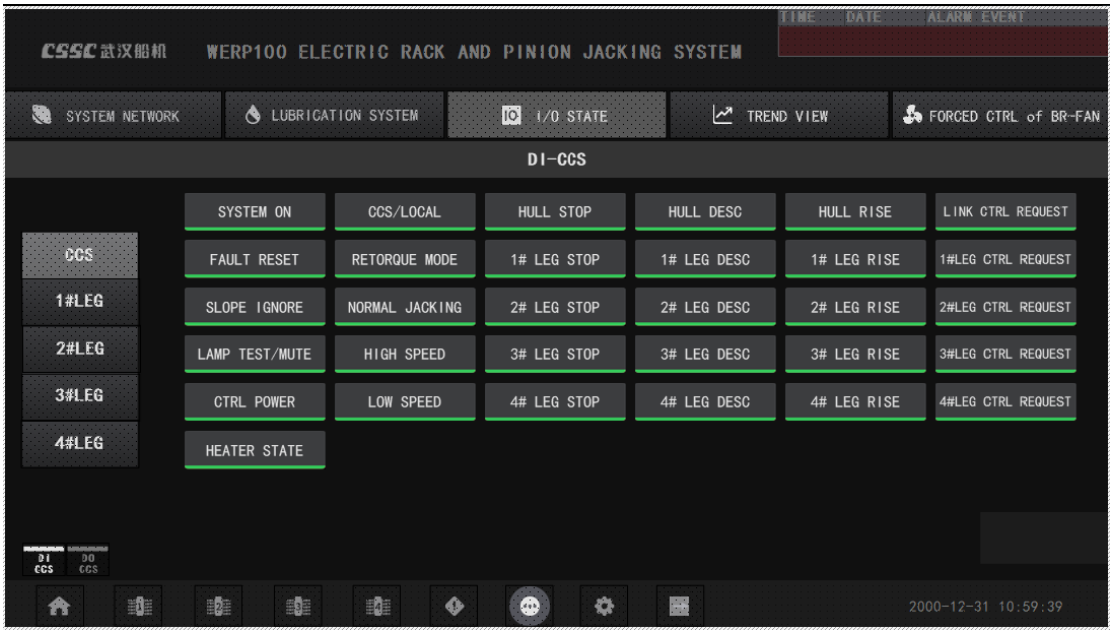

提示——状态描述

Tips——State description

当触摸屏 I / O 状态表中对应的指示灯由红色变为绿色时，表示对应的 I / O 点被触发。

When the corresponding indicator light in the I / O status table in the touch screen changes from red to green, it indicates that the corresponding I / O point is triggered.

2.4.21 网络通信 Network communication

升降系统共有 5 套控制单元，分别位于集中控制台和各桩腿控制单元。各智能控制单元与变频器通过以太网通信，各智能控制单元之间的实时通信状态如下图所示。

The jacking device has a total of 5 sets of control units, respectively located in the centralized console and each leg control unit. Each intelligent control unit and VFD communicates through Ethernet, and the following figure shows the communication status between the intelligent units in real time.

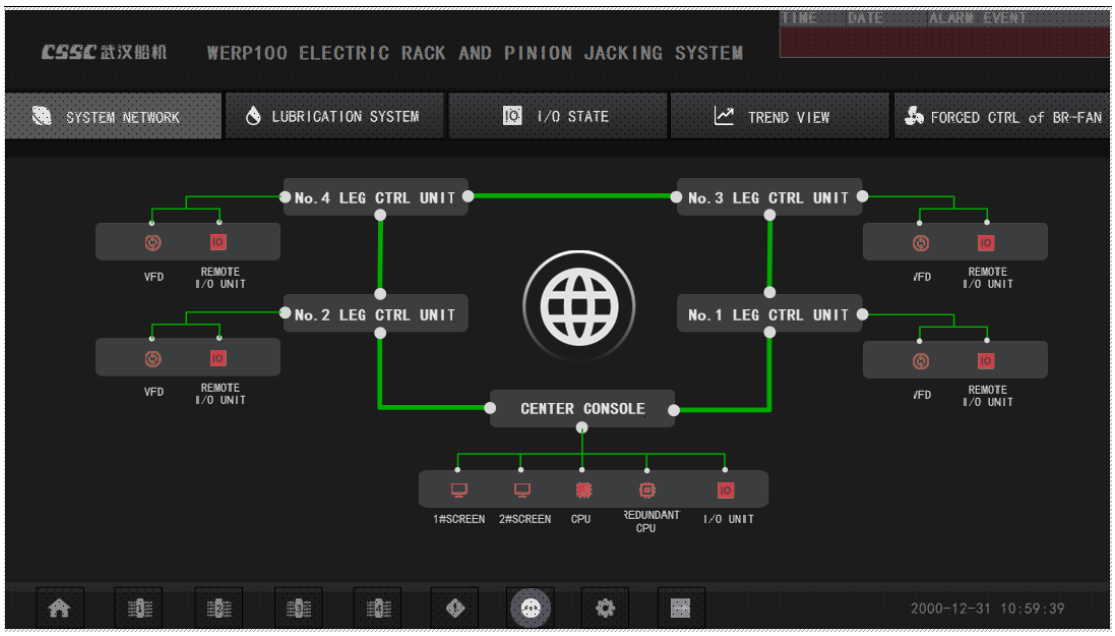

提示——描述

Tips——description

如果智能单元之间的网络通信正常，则显示绿色箭头;如果绿色箭头消失，则需要检查交换机接口状态。当通信失败时，对应网口呈红色指示，请检查网线状态或交换机是否故障。

If the network communication between the intelligent units is normal, the green arrow is displayed; if the green arrow disappears, you need to check the interface status of the switch. When the communication failure, the corresponding network interface has red indication, then check the network cable status or whether the switch is faulty.

2.4.22 预压载 Preload

当船体需要预载时，操作员可以选择“NORMAL- preload - RETORQUE”选择器到“preload”，进入预压载界面。

When the hull need preload, the operator can choose the “NORMAL- PRELOAD- RETORQUE” selector to “PRELOAD” and enter into "PRELOAD" interface as below.

选择预压载阶段。按下按钮，当按钮变为绿色时，表示已触发选定的预加载阶段。系统预载可分为三级，每一级对应额定预载能力的 75%、90%和 100%;

Select the preload stage. Press the button , when the button turns green , indicates that the Selected preload stage is triggered. The preload of the

system can be divided into three stages, each stage corresponds to 75%, 90% and 100% of the rated preload capacity;

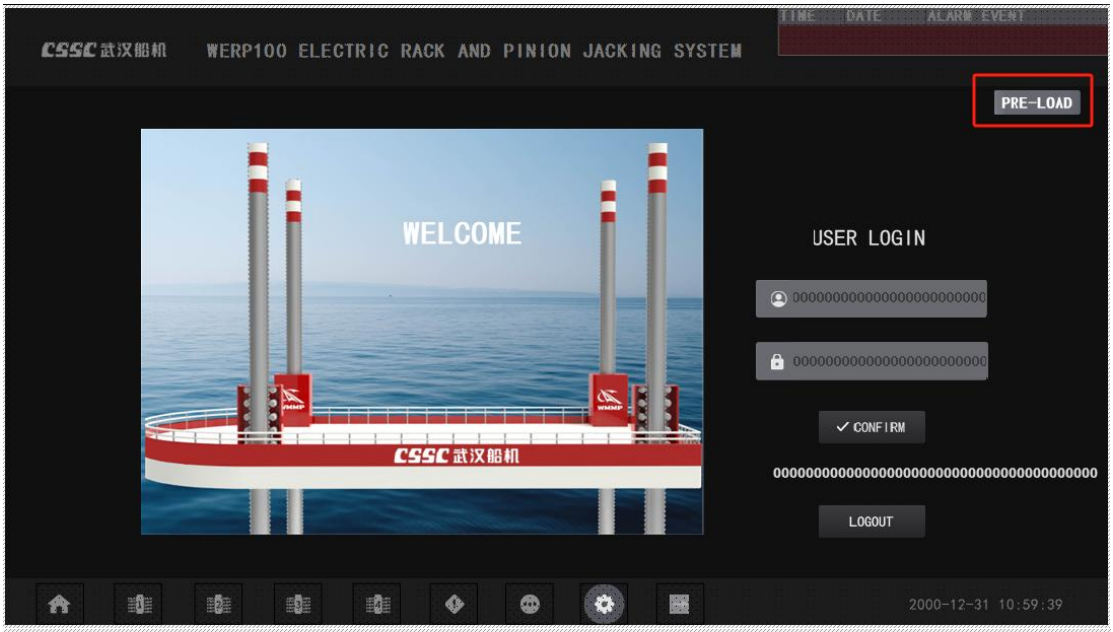

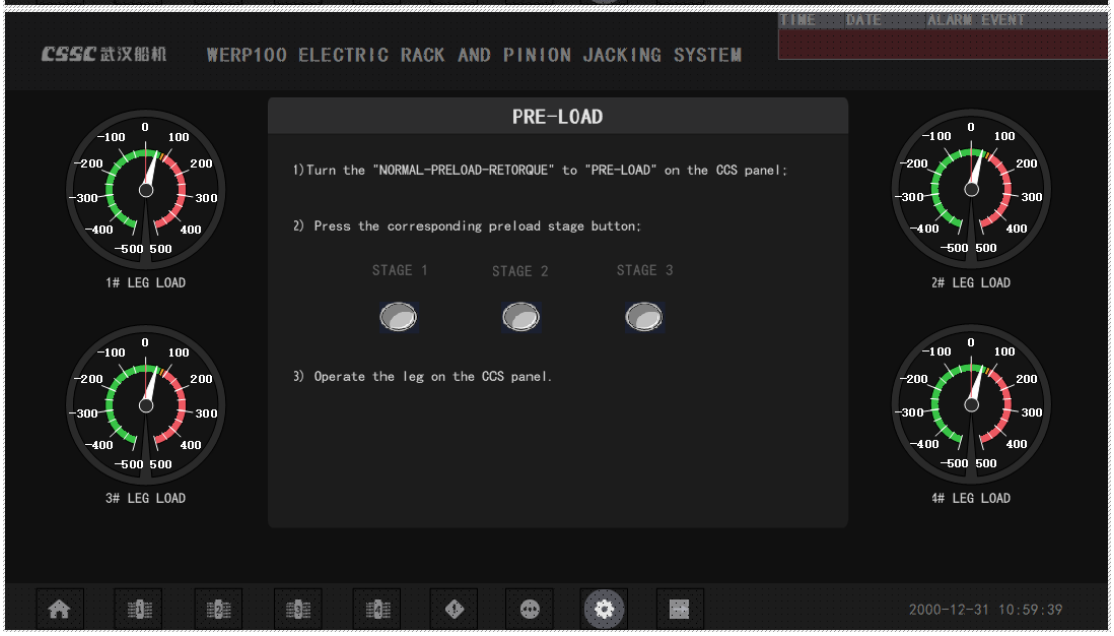

NOTICE!	1. 平台的预加载操作见 3.2.2.7。 2. 根据海底情况，为保证平台从水面顶升后的安全，可在平台完全脱离水面前(如平台吃水仍为 0.5-1m 时)对平台进行第一阶段的预压;

	1. The preload operation of the platform is described in 3.2.2.7. 2. According to the seabed conditions, in order to ensure the safety of the platform after jacking from the water surface, the platform can be preload in stage 1 before the platform is completely out of the water (such as when the platform's draft remains 0.5-1m);

3 操作说明 Operation Description

每次升降操作前，操作者请按下图所示的流程图进行升降系统的操作。

Before each lift operation, the operator performs the jacking system operation by following the flowchart shown in the figure.

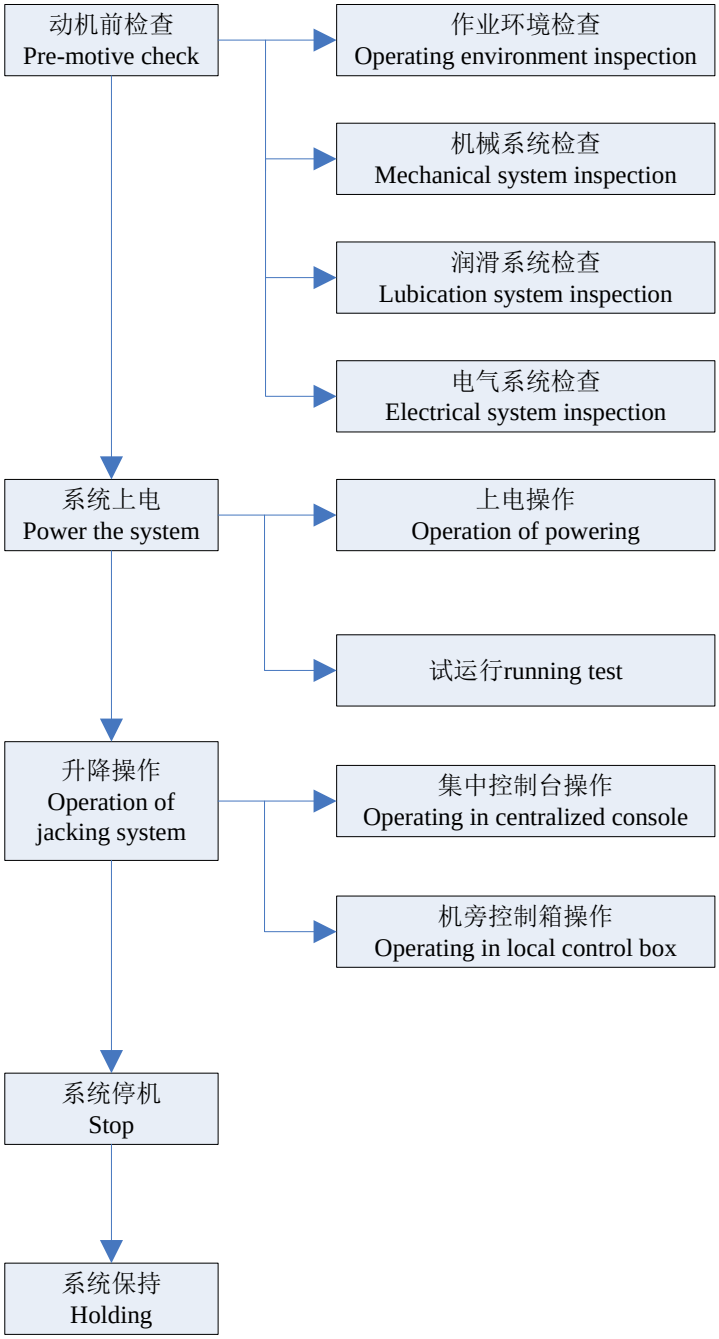

图 3.1.1 升降系统操作流程

Fig 3.1.1 The operating flow of the jacking system

3.1 动机前检查 Pre-motivation check

升降系统作为平台的关键设备，其每次操作都关系到整个平台的安全，不容有失。因此，升降系统每次操作前，需对系统状态进行详细的检查，其检查的主要重点为以下三点：

（1）“人”——全船人员是否通知到位；操作相关人员是否准备到位；其余作业人员是否提醒到位；

（2）“机”——升降设备状态是否正常；其余设备是否停止；

（3）“物”——异物是否清理到位；

As the key equipment of the platform, the jacking system is related to the safety of the whole platform every time it is operated. Therefore, before each operation of the jacking system, a detailed inspection of the status of the system is required, the main focus of which is the following three points:

1)"person" - whether the ship's personnel are in place, whether the operation of the relevant personnel are ready to be in place, whether the rest of the operators are reminded in place;

2)"Machine" - whether the lifting equipment status is normal;

3)"Things" - whether the foreign body is cleaned up in place;

3.1.1 作业环境检查确认 Job environment check confirmation

升降系统进入操作前，要对照操船手册，确认是否满足该次升降操作的作业环境，如风、浪、流等。

Before entering the operation of the jacking system, check against the ship manual to confirm whether the operating environment of the lift operation, such as wind, waves, flow, etc.

NOTICE!	务必确认是否满足操船手册的作业环境要求，否则可能会对升降设备造成损害或人员伤亡。 Be sure to verify that the operating environment requirements of the ship's manual are met, as this may cause damage or injury to lifting equipment.

3.1.2 机械系统检查 Mechanical system inspection

1）齿轮箱内齿轮油液位在中部油镜范围内。

The gear oil level in the gearbox is within the range of the middle oil mirror.

2）检查齿轮箱、电机连接螺栓是否松动，如有松动，需按扭矩紧固。

check whether the connecting bolts of gearbox and motor are loose. if they are loose, tighten them according to the torque.

3）检查齿轮齿条、桩腿等运动部套在其运动路劲上有无异物。如有，在动机前清除。

check whether there are foreign bodies on the moving parts of the rack and pinion, leg and so on. If there is, remove it before jacking.

3.1.3 自动润滑系统检查 Automatic lubrication system check and preparatory work

检查工作

1)润滑泵站油箱内的油脂是否满;

2)润滑系统各部件如阀件、管路等进行检查，确认无漏油、渗油现象;

Check work

1) Whether the grease inside the oil tank of the lubrication pump station is full ;
2) Lubrication system components such as valve parts, lines, etc. to carry out inspection, to confirm that there is no oil leakage, oil seepage phenomenon;

操作工作

1)远程模式的选择需要在本地操作员面板上进行。

2)将选择开关置于“Remote”(左侧)，选择“Remote Mode”。

3)选择远程模式时，可通过中控室的开/停按钮进行控制，也可进行紧急停机操作。

4)远程启动后，由系统按设定的参数进行电动润滑泵的运行。满足启动条件泵启动，满足停止条件泵停止。重复这个循环。

Operation work

1) The selection of remote mode needs to be carried out on the local operator panel.
2) Set the selection switch to Remote (left) to select Remote Mode.
3) When the remote mode is selected, it can be controlled via the start/stop button in the central control room, as well as emergency stop operation.
4) After remote start-up, the operation of the electric lubrication pump is carried out by the system according to the set parameters. The pump starts when the starting conditions are met, and stops when the stop conditions are met.

Repeat the cycle.

强制模式

1) 强制模式的选择需要在本地操作员面板上进行。一旦选择**强制**模式，中控室将无法操作腿部润滑泵站。

2)将选择开关置于“Mandatory”(右)，选择“Mandatory Mode”。

3) 将选择开关置于“Stop”(中间)，润滑系统停止运行。

4)在特殊情况下，可通过急停按钮紧急停机。

Local mode

1) The selection of local mode needs to be carried out on the local operator panel. Once the local mode is selected, the central control room will not be able to operate the leg lubrication pumping station.
2) Set the selection switch to “Mandatory” (right) to select Mandatory Mode
3) Set the selection switch to “Stop” (middle) ，the lubrication stop running.
4) In case of special circumstances, the device can be urgently stopped by means of the emergency stop button.

3.1.4 电气系统检查和准备工作 Electrical system check and preparatory work

在升降操作开始前，电气人员需对升降系统进行下列检查和准备工作。

1) 运行前确保电机和变频器加热器始终打开，以防止温度变动导致冷凝结露。

2) 保持升降电气设备间空调正常运转，空调温度设置在 25 度左右。

3) 检查电源箱是否上电。

4) 低压配电板给升降集中控制台、4 个桩腿控制单元 220VAC 控制电合闸。

5) 集中控制台和 4 个桩腿控制单元柜内的断路器全部合闸（除桩腿控制单元 Q3 外，**Q3 需要在变频器合闸上电后，单独合闸**）。

6) 确保 1500R PLC 完成冗余连接，两个 PLC 显示为 R-RUN。HMI 软件正常启动，通讯及画面正常，检查触摸屏各状态显示参数是否正常。

7) 配电板给 2 个桩腿变频电源柜供电，各桩腿变频电源柜控制电源 Q21 合闸，主断路器 Q1 合闸，触摸屏远程或者本地给整流合闸，让每个桩腿整流启动运行。

8) 按下集中控制台上的<试灯>按钮，检查集中控制台上的所有指示灯是否都能正常工作。

9) 按“急停”按钮，检查整个系统是否能立即停止。急停测试完毕后，变频器整流和控制柜刹车电源 Q3 需要重新合闸上电。

以上工作完成表示升降系统已经上电待命。电气控制装置的检查和准备完成后，向控制中心报告。

Before the jacking operation begins, electrical personnel need to carry out the following checks and preparations for the jacking system.

1) Ensure that the motor and inverter heaters are always turned on before operation to prevent cold condensation caused by temperature changes.

2) Maintain the normal operation of air conditioning in the electrical equipment room, and the air conditioning temperature is set at about 25 degrees.

3) Check the power box is power on.

4) low-voltage switchboard to lift centralized console, 4 pile leg control unit 220VAC control closing.

5) All circuit breakers in the centralized console and 4 leg control unit cabinets are closed (except leg control unit Q3,The Q3 needs to be closed after the VFD power on).

6) Ensure that the 1500R PLC is redundantly connected, and the two PLCS are displayed as RUN-Redundant. The HMI software starts normally, and the communication and screen are normal. Check whether the display parameters of each state on the touch screen are normal.

7) The distribution board supplies power to two pile leg frequency conversion power supply cabinets, each pile leg frequency conversion power supply cabinet controls the power supply Q21, the main circuit breaker Q1, and the touch screen remote or local rectifier to close, so that each pile leg rectifier starts to run.

8) Press the < Test light > button on the centralized console to check whether all the indicators on the centralized console can work normally.

9) By pressing "EMERGENCY STOP" button, check whether the whole system can stop immediately.After the scram test is completed, the inverter rectifier and control cabinet brake power supply Q3 need to be re-closed and powered on.

If the above tasks are complete, the jacking system is powered on. Report to the control center after the inspection and preparation of the electrical control device.

3.2 升降操作 Jacking Operation

3.2.1 运行前的准备操作 Preparation before running

1. 系统接通 System on

通常情况下，控制系统处于关闭状态。当电动升降装置需要使用时，需打开控制系统。将集中控制台上的“控制系统”开关置于“开”的位置，系统接通后，集控台面板上相应的“系统开”指示灯亮。要关闭控制系统时，将开关打到“关”即可。

Normally, the control system is turned off. When the electric lifting device needs to be used, the control system should be turned on. Set the "Control System" switch on the centralized console to the "On" position. After the system is connected, the corresponding "System on" indicator on the centralized console panel will light up. To turn off the control system, turn the switch to "Off".

图 3.2.1 系统开选择开关

Fig 3.2.1 system on selection switch

系统接通后，电动升降装置的默认控制位置为集中控制，若将控制位置选择开关打到“机旁”，操作权限就会转为机旁控制。

After the system is connected, the default control position of the electric jacking device is centralized control. If the control position selection switch is played to "local side", the operation authority will be converted to local side control.

⚠注意！ NOTICE	电动升降装置控制系统没有“开”时，升降控制无效。 When the electric lifting device control system is not "on", the lifting control is invalid.

2. 升降系统重载问询 jacking heavy request

由于升降系统每个桩腿的电机数量较多，因此在电机运行前，需进行重载问

询，需起动哪个桩腿，就在触摸屏重载问询界面上按下该桩腿控制区域的“重载问询”按钮，当该桩腿相应的“允许起动”指示灯亮后，才可对该桩腿的桩腿进行控制。

Due to the large number of motors in each leg of the jacking system, it is necessary to carry out heavy request inquiry before the motor is run. Which leg needs to be started, press the "heavy request inquiry" button in the control area of the leg on the touch screen heavy duty inquiry interface. When the corresponding "Allow to start" indicator of the leg is on, the leg of the leg can be controlled.

⚠注意！ NOTICE	重载问询无问题后，“允许起动”指示灯常亮，只有当变频电源柜整流关闭，“允许起动”指示灯才会灭，此时若重新进行升降操作，则需重新进行重载问询。 After heavy inquiry, the "Allow to start" indicator is on. The "Allow to start" indicator disappears only when the converter is off.. At this time, if the jacking operation is carried out again, the heavy inquiry needs to be carried out again.

3.2.2 集中控制 Central control

3.2.2.1 控制模式选择 Control mode selection

集中控制台中面板上的控制模式选择开关“正常-预压载-转矩调整”用来选择升降系统的电机运行模式，当选择开关打到“正常”时，系统进行正常的升降操作。

By turning "NORMAL-PRELOAD-RETORQUE" switch on control panel to "NORMAL", the system will operate normal jacking.

图 3.2.2 控制模式选择

Fig 3.2.2 Control mode selection switch

当系统为下列报警停机状态时，将选择开关打到“转矩调整”，在触摸屏上进

行转矩调整操作，详见 3.2.2.13：

- 电机载荷不均衡报警；
- 单台电机负荷过载报警；

When the system is in any one of the following conditions, turn "NORMAL-PRELOAD-RETORQUE " switch to “RETORQUE”, and Retorque operations are be done on touch screen, the detailed refers to 3.2.2.13：

- The motor load is unbalance and alarm;
- One single motor load overload and alarm.

3.2.2.2 控制位置选择 Control location selection

电动升降装置在集中控制台上的控制位置选择开关“集中控制-机旁控制”选择开关，用来确定集中控制台和机旁控制箱是否拥有操作权限。当开关打到“集中控制”一侧时，操作权限在集中控制台，集控台面板上的“集中控制”指示灯亮；当开关打到“机旁控制”时，操作权限在机旁控制箱，机旁控制箱上的操作详见 3.2.3。系统默认为“集中控制”。

There is “C.C.S.-LOCAL” location selection switch on the centralized control console. It determines the centralized control console’s and the control box’s operation permissions. When the switch is turned to the “C.C.S.”, “C.C.S.” lamp indication lights, the centralized control console gets the operation permissions; otherwise, local control box gets the operation permissions as shown in 3.2.3, C.C.S is the default system location.

图 3.2.3 控制位置选择

Fig 3.2.3 Control location selection

注意！ NOTICE	“正常”操作可在“集中控制”和“机旁控制”任意一种情况下进行；“转矩调整”和“预压载”操作只能在“集中控制”下进行。

	The “Normal” operation can be operated in the two location. But “Retorque” and “Preload” operation can be adjusted only in the “C.C.S.”;

3.2.2.3 速度选择 Speed selection

集中控制台上的速度选择开关“低速-额速-倍速”用来选择电机的运行速度，当进行升降桩腿的时候，可以选择倍速，升降速度为 1.0m/min；当进行升降平台时，可以额定升降，速度为 0.6m/min；当进行低速升降时，速度为 0.1m/min。

“LOW- RATED- MULTIPLIER” switch on the centralized control console is used to select the running speed of the machine. When do leg jacking which can choose the multiplier speed, the leg speed is 1.0m/min. When do hull jacking which can choose the rated speed, the leg speed is 0.6m/min.When do low speed, the leg speed is about 0.1m/min.

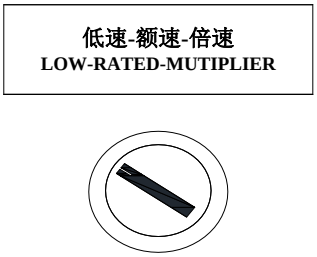

图 3.2.4 速度选择

Fig 3.2.4 Speed selection

注意！ NOTICE	1)低速模式主要用于平台调平、平台负荷调整、拔桩、桩腿收零; 2)平台模式下不允许使用倍增器速度。 1) Low speed mode is mainly used when platform leveling, platform load adjusting, pile pulling and pile leg zero collection; 2) multiplier speed is not allowed in platform mode.

3.2.2.4 升降控制 Jacking control

集中控制台面板上有 5 个区域可对升降进行控制，如下图 3.2.5 所示，既可进行单桩的升降控制，也可进行桩腿的联动控制。

There are five control areas in the C.C.S. as shown in Fig3.2.5, which are respectively separate control area of each leg and combining leg control area.

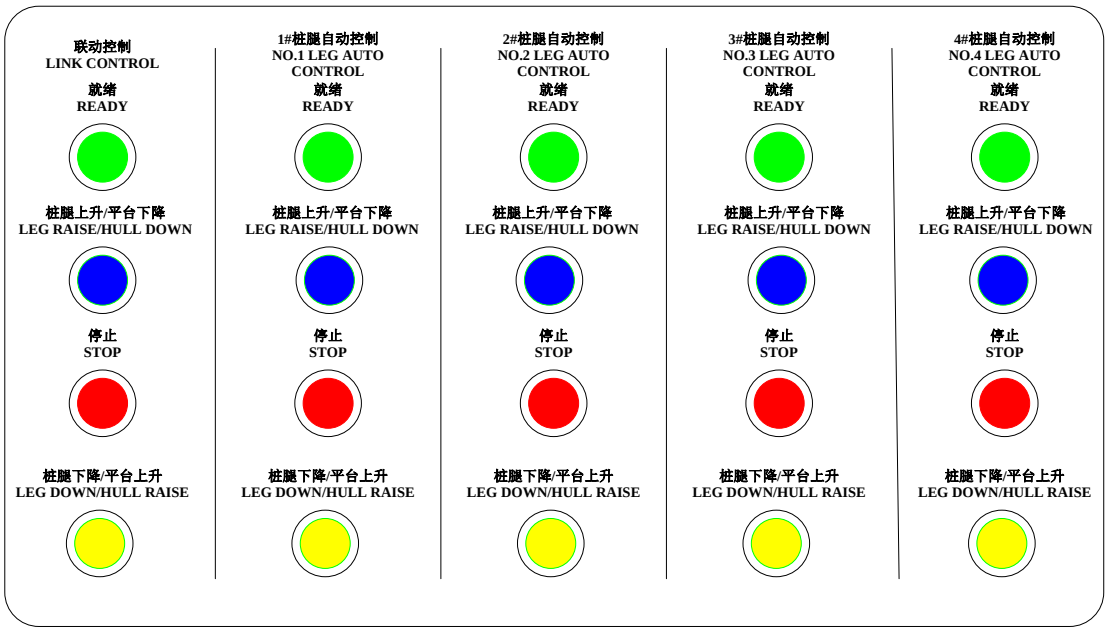

图 3.2.5 升降控制

Fig 3.2.5 jacking control

1）单桩升降

在每条桩腿对应的区域下进行相应的操作，以 1#桩腿为例，其他三条桩腿操作相同，具体步骤为：

A. 按下“1#桩腿”区域下的“就绪”带灯按钮，当“就绪”带灯按钮亮时，便可进行 1#桩腿的升降控制；

B. 当需进行桩腿上升操作时，按下“平台下降/桩腿上升”带灯按钮，当“平台下降/桩腿上升”带灯按钮亮时，表示 1#桩腿上升；当需进行桩腿下降操作时，按下“平台上升/桩腿下降”带灯按钮，当“平台上升/桩腿下降”带灯按钮亮时，表明 1#桩腿下降；

C. 当需要停止该桩腿的动作时，按下“停止”按钮，且“就绪”带灯按钮和“平台下降/桩腿上升”/“平台上升/桩腿下降”带灯按钮灭。

1）one leg jacking

Corresponding operation should be done under the corresponding areas in each leg. Taking an example of NO.1 leg, the other three legs operations are the same:

A. Press “REDAY” button with lamp in “NO.1 leg” area, when “REDAY” lamp is light, NO.1 leg can be controlled;

B. When leg up operation is needed, press “LEG RAISE/HULL DOWN” button

with lamp. When “LEG RAISE/HULL DOWN” lamp is light, it means NO.1 leg is rising up; when leg down operation is needed, press “LEG DOWN/HULL RAISE” button with lamp. When “LEG DOWN/HULL RAISE” lamp indication is light, it means NO.1 leg is falling down;

C. When the leg needs to stop, press “STOP” button, “ready” lamp and “LEG RAISE/HULL DOWN” or “LEG DOWN/HULL RAISE” lamp is dark.

2）联动升降

系统默认为 4 条桩腿联动控制，通过“联动控制”区域下的按钮同时控制 4 条桩腿升降，实现整个平台的整体升降。

系统不仅可以进行 4 条桩腿的联动控制，还可以进行 2 条和 3 条桩腿的联动控制，具体步骤为：

A. 按下“联动控制”区域下的“就绪”带灯按钮，当“就绪”带灯按钮亮时，表明可进行联动控制；

B. 按下无需进行联动控制的“X#桩腿”区域下的“就绪”带灯按钮，当“就绪”带灯按钮亮时，表明该桩腿将进行单独控制，若要取消该桩腿的独立控制，返回到联动控制中，需要再次按下“就绪”带灯按钮。除单独控制中的桩腿外，其他桩腿都处于联动控制；

C. 在“联动控制”区域下，当需进行联动桩腿上升操作时，按下“平台下降/桩腿上升”带灯按钮，当“平台下降/桩腿上升”带灯按钮亮时，表示联动控制的桩腿上升；当需进行联动桩腿下降操作时，按下“平台上升/桩腿下降”带灯按钮，当“平台上升/桩腿下降”带灯按钮亮时，表明联动控制的桩腿下降；

D. 当需要停止联动控制时，按下“联动控制”区域下的“停止”按钮，且“就绪”带灯按钮和“平台下降/桩腿上升”/“平台上升/桩腿下降”带灯按钮灭，联动控制结束。

2）Combining jacking

The default combining jacking control is four legs combing control, the system can control four legs jacking at the same on “link control” area to control hull jacking.

The system also can control two legs and three legs combing jacking:

A. Press “READY” button with lamp in “LINK CONTROL” area, when “READY” lamp is light, combing control is ready;

B. Press the “READY” button which the leg doesn’t need combining control in the

corresponding leg area. When “REDAY” lamp is light, the corresponding legs will be separated controlled. If the leg needs to combine control, press “READY” button again until it is dark. Besides the separate controlled legs, the rest of legs are in the combining control;

C. When combining leg up operation is needed, press “LEG RAISE/HULL DOWN” button with lamp. When “LEG RAISE/HULL DOWN” lamp is light, it means combining legs are rising up; when combining leg down operation is needed, press “LEG DOWN/HULL RAISE” button with lamp. When “LEG DOWN/HULL RAISE” lamp indication is light, it means combining legs are falling down;

When combining control needs stop, press “STOP” button, “ready” lamp and “LEG RAISE/HULL DOWN” or “LEG DOWN/HULL RAISE” lamp is dark, combining control is over.

3.2.2.5 桩腿上升/平台下降 Leg rise/ Hull down

⚠ 注意！ NOTICE	1）每次平台下降前，为确保平台的安全，每条桩腿低速点动下降约 5s 钟后停止动作，确保平台下降时各桩腿均能正常工作，无未知报警（如：电磁刹车故障，升降单元过载等）； 2）平台下降时，制动电阻会参与工作，操作人员需关注制动电阻温度，若温度超过设定阈值，系统会报警停机，此时，平台只能上升，不能下降，需要待温度降下来之后才能继续下降平台；（正常情况下，制动电阻温度不会超过设定值，操作者关注到制动电阻温升过快时需要检查制动电阻的风机）。 1) Before each platform descent, in order to ensure the safety of the platform, each pile leg shall stop acting after a low speed point descent for about 5s, so as to ensure that each pile leg can work normally when the platform descends without unknown alarm (such as electromagnetic brake failure, jacking unit overload, etc.); 2) When the platform falls, the brake resistance will participate in the work, and the operator should pay attention to the brake resistance temperature. If the temperature exceeds the set threshold, the system will alarm and stop. At this time, the platform can only rise, but not fall, and the platform can continue to fall after the temperature drops; (Under normal circumstances, the brake resistance temperature will not exceed the set value, the operator is concerned about the brake resistance temperature rise too

	fast need to check the brake resistance fan).

操作步骤：

1. 在驾驶室将“关-控制系统-开”钥匙开关打到“控制系统开”；

2. 控制权限旋钮“集中控制-机旁控制”切到“集中控制”；

3. 工况选择开关“正常升降-预压载-RETORQUE”切换到“正常升降”；

4. 在联动控制区域按下“桩腿上升/平台下降”按钮，平台的桩腿开始上升（平台开始下降），当需要停止动作时，按下联动控制区域的“停止”按钮，升降动作停止；

Operation steps:

1. Switch the "Off - control system - On" key switch to "control system on" in the cab;

2. Control authority knob "C.C.S. - LOCAL" to "C.C.S.";

3. The working condition selection switch "NORMAL-PRELOAD-RETORQUE" is switched to "NORMAL";

4. Press the "LEG RAISE/HULL DOWN" button in the link control area, and the pile leg of the platform starts to rise (the platform starts to fall). When it is necessary to stop the action, press the "stop" button in the link control area, and the jacking action will stop;

NOTICE!	1）桩腿上升时，可以使用“倍速”模式，当桩腿快收到零位时，系统会自动降速，避免桩腿上升时，冲撞到船体底部； 2）平台下降时，不允许使用“倍速”功能； 3）平台下降过程中，为保证各桩腿的受力均衡，需要调整平台的水平姿态，最好控制在 0.2 ℃以内； 4）平台入水后，需要实时关注平台的吃水，为“拔桩”做准备。 1) When the pile leg rises, the "multiplier speed" mode can be used. When the pile leg quickly receives zero position, the system will automatically slow down to avoid the pile leg from crashing into the bottom of the hull when it rises; 2) When the platform drops, the "multiplier speed" function is not allowed;

	3) In the process of platform descent, in order to ensure the force balance of each pile leg, the horizontal posture of the platform needs to be adjusted, preferably controlled within 0.2°; 4) After the platform enters the water, it is necessary to pay attention to the draft of the platform in real time to prepare for "pulling the pile".

3.2.2.6 桩腿下降/平台上升 Leg down/Hull raise

NOTICE!	1）平台上升前，每条桩腿低速点动下降约 5s 后停止动作，确保平台上升时各桩腿均能正常工作，无未知报警（如：电磁刹车故障，升降单元过载等）； 2）为确保设备无异常报警或损坏，只有当触摸屏界面的方向箭头消失（电机完全停止）后，才能继续下一次的操作（如切换工况，继续升降操作等）。 1) Before the platform rises, each pile leg will drop at a low speed and stop after about 5S, to ensure that each pile leg can work normally when the platform rises, without unknown alarm (such as electromagnetic brake failure, jacking unit overload, etc.); 2) In order to ensure that the equipment has no abnormal alarm or damage, only when the direction arrow of the touch screen interface disappears (the motor completely stops), the next operation can continue (such as switching conditions, continuing lifting operation, etc.).

操作步骤：

1. 在驾驶室将“关-控制系统-开”钥匙开关打到“控制系统开”；
2. 控制权限旋钮“集中控制-机旁控制”切到“集中控制”；
3. 工况选择开关“正常升降-预压载-RETORQUE”切换到“正常升降”；
4. 在联动控制区域按下“桩腿下降/平台上升”按钮，平台的桩腿开始下降（平台开始上升），当需要停止动作时，按下联动控制区域的“停止”按钮，升降动作停止；

Operation steps:

1. Switch the "Off - control system - On" key switch to "control system on" in the cab;

2. Control authority knob "C.C.S. - LOCAL" to "C.C.S.";

3. The working condition selection switch "NORMAL-PRELOAD-RETORQUE" is switched to "NORMAL";

4. Press the "LEG DOWN/HULL RAISE" button in the link control area, and the pile leg of the platform begins to fall (the platform begins to rise). When it is necessary to stop the action, press the "stop" button in the linkage control area to stop the lifting action;

NOTICE!	1）桩腿下降时，可以使用“倍速”模式，当桩腿快触底前，需要将速度切回“额速”，避免负载过大导致升降单元超载导致系统报警停机； 2）升降系统的 4 条桩腿既可以独立控制，也可以联动控制，当按下各桩腿的“就绪”带灯按钮时，表明此条桩腿处于单动，其它桩腿处于联动模式； 3）为保证平台上升时平台的水平姿态，当某一条桩腿触底时，可以停止到底后的桩腿，继续其它未到底桩腿的下降； 4）为了区分升降单元的受力方向，桩腿升降时，升降单元为负载荷，平台升降时，升降单元为正载荷； 5）平台上升时，不允许使用“倍速”功能； 6）平台上升过程中，为保证各桩腿的受力均衡，需要调整平台的水平姿态，最好控制在 0.2 ℃以内； 1) When the pile leg falls, the "multiplier speed" mode can be used. Before the pile leg quickly hits the bottom, the speed needs to be cut back to the "rated speed" to avoid excessive load resulting in overloading of the jacking unit and causing the system to alarm and stop; 2) The four pile legs of the jacking system can be controlled independently or in linkage. When the "Ready" button of each pile leg is pressed, it indicates that this pile leg is in single motion and the other pile legs are in linkage mode; 3) In order to ensure the horizontal posture of the platform when the platform rises, when a certain pile leg touches the bottom, it can stop the pile leg after the bottom and continue to fall the other pile legs before the bottom; 4) In order to distinguish the force direction of the jacking unit, when the pile leg is

	lifting, the jacking unit is negative load, and when the platform is lifting, the jacking unit is positive load; 5) When the platform rises, it is not allowed to use the "Multiplier speed" function; 6) In the process of platform rise, in order to ensure the force balance of each pile leg, it is necessary to adjust the horizontal posture of the platform, preferably controlled within 0.2 °

3.2.2.7 预压载 PRELOAD

NOTICE!	1）预压载的目的在于使平台的四条桩腿能较深的插入海底并受载均匀，达到平台升起后的安全生存状态； 2）预压载操作只允许对角桩腿成对进行，如先预压 2#、3#桩腿，则后压 1#、4#桩腿。至于先预压哪对桩腿可在预压前观察桩腿负载值，哪对桩腿负载小，就先预压哪对。预压之前必须将平台倾斜调平（＜0.2 °）； 3）系统的预压可分为 3 个阶段，每个阶段分别对应预压载荷的 75%，90%和 100%； 1) The purpose of preload is to enable the four pile legs of the platform to be deeply inserted into the seabed and loaded evenly, so as to achieve a safe survival state after the platform is raised; 2) The preload operation is only allowed to be carried out in pairs of diagonal piles. If the 2# and 3# piles are preload first, then the 1# and 4# piles are later pressed. As for which pair of pile legs to preload first, the load value of pile legs can be observed before preloading, and which pair of pile legs with small load will be preload first. The tilt of the platform must be levelled (< 0.2 °) before preloading; 3) The prepressure of the system is divided into 3 stages, each stage corresponds to 75%, 90% and 100% of the prepressure load respectively;

操作步骤：

1. 在驾驶室将“关-控制系统-开”钥匙开关打到“控制系统开”；
2. 控制权限旋钮“集中控制-机旁控制”切到“集中控制”；
3. 工况选择开关“正常升降-预压载-RETORQUE”切换到“预压载”；
4. 按下暂不预压的对角线桩腿“就绪”带灯按钮（如：先按下 1#和 4#桩腿的

就绪带灯按钮，则操作联动下降时，2#和 3#桩腿被预压，而 1#和 4#桩腿保持不动）；

5. 在联动控制区域按下“桩腿下降/平台上升”按钮，则对角线桩腿 2#和 3#开始下降，当观察到对应桩腿吨位达到该阶段预压载荷时，表明预压结束，按下停止按钮；

6. 同理，选择 2#和 3#桩腿带灯按钮，继续 1#和 4#桩腿的预压；

7. 按照步骤 4~步骤 6 将两对角线桩腿的 3 个步骤预压完。

Operating steps

1. Switch the "Off - control system - On" key switch to "control system on" in the cab;

2. Control authority knob "C.C.S. - LOCAL" to "C.C.S.";

3. The working condition selection switch "NORMAL-PRELOAD-RETORQUE"is switched to "PRELOAD";

4. Press the "Ready" button with light of the diagonal pile leg that is not preload for the time being (such as: press the ready button with light of the 1# and 4# pile leg first, then the 2# and 3# pile legs will be preload when the operation falls, while the 1# and 4# pile legs will remain motionless);

5. Press the "LEG DOWN/HULL RAISE" button in the linkage control area, then the diagonal pile leg 2# and 3# begin to fall. When the tonnage of the corresponding pile leg reaches the preload load at this stage, it indicates the end of preload, and press the stop button;

6. Similarly, select 2# and 3# pile leg belt light button to continue the preload of 1# and 4# pile leg;

7. Perform Step 4 to Step 6 to preload the two diagonal pile legs.

NOTICE!	1）平台预压时，只有“桩腿下降/平台上升”有效； 2）根据海底情况，为确保平台升离水面后的绝对安全，在平台完全出水前（如平台吃水还剩 0.5~1m 时），可以对平台进行阶段 1 的预压； 3）当平台预压载时，要特别注意水平仪指示的倾斜度，并实时进行调平，此时

的平台倾斜是由于海底软硬度不均造成的；

4）预压稳定时间现暂定为 10 分钟，可根据作业区域的地址和海况作出相应的改变；

5）桩腿预压的插土深度不能太浅，插土太浅，由于冲刷使土的抗力变小，造成桩腿下沉，水平移位等问题。若经过加大预压负荷，仍达不到该深度，则平台须考虑重新选择作业区域；

6）若桩腿预压的插土深度太大，则要考虑会发生拔桩困难及拔不出的问题，也须考虑重新选择作业区域；

7）预压时，桩腿处在上硬下软的双层地基场地作业时，必须满足一下两个准则之一：

a）硬层的承载力不大，应能容许桩腿全部穿过该层；

b）硬层必须有足够大的承载能力，能安全的支持桩腿，其穿刺破坏的安全系数至少为 1.5 倍。

1) When the platform is preload, only " leg down/hull raise" is effective;

2) According to the seabed conditions, in order to ensure the absolute safety of the platform after lifting from the water surface, the platform can be preload in stage 1 before the platform is completely out of the water (such as when the platform's draft remains 0.5-1m);

3) When the platform is preload, pay special attention to the inclination indicated by the level, and adjust the level in real time. At this time, the tilt of the platform is caused by the uneven hardness of the seabed;

4) The preload stabilization time is currently set at 10 minutes, which can be changed according to the address of the working area and sea conditions;

5) The embedment depth of the pile leg pre-load should not be too shallow, and the embedment depth is too shallow. Due to the erosion, the resistance of the soil becomes smaller, resulting in the sinking of the pile leg, horizontal displacement and other problems. If the depth is still not reached after increasing the preload, the platform must consider re-selecting the operation area;

6) If the depth of soil insertion of the pile leg prepressure is too large, it is necessary to consider the problem that it will be difficult to pull out the pile and can not pull out, and it is also necessary to consider re-selecting the operation area;

7) During precompression, when the pile leg is operating in a double-layer foundation

	site with hard upper and soft lower, one of the following two criteria must be met: a) The bearing capacity of the hard layer is not large, which should allow all the pile legs to pass through the layer; b) The hard layer must have a large enough bearing capacity to safely support the pile leg, and the safety factor of puncture failure is at least 1.5 times.

3.2.2.8 拔桩 Pull Leg

NOTICE!	1、拔桩操作前，应根据作业海区的具体情况制定出拔桩方案； 2、拔桩操作只允许对角桩腿成对进行，即 1#、4#桩腿或 2#、3#桩腿“成对”地拔。而且在拔桩腿时，都只能做交替间隙操作，稍拔 1#、4#桩腿，立即改拔 2#、3#桩腿，继而再拔 1#、4#桩腿，如此交替直至四条桩腿相继拔松为止。 1. Before the pile pulling operation, the pile pulling plan should be worked out according to the specific situation of the working sea area; 2, the pull leg operation is only allowed to diagonal pile legs in pairs, that is, 1#, 4# pile legs or 2#, 3# pile legs "in pairs". In addition, when pulling the pile leg, it can only do alternating gap operation, slightly pull 1#, 4# pile leg, immediately change 2#, 3# pile leg, and then pull 1#, 4# pile leg, so alternately until the four pile legs have been pulled loose.

操作步骤：

1. 在驾驶室将“关-控制系统-开”钥匙开关打到“控制系统开”；
2. 控制权限旋钮“集中控制-机旁控制”切到“集中控制”；
3. 工况选择开关“正常升降-RETORQUE-预压载”切换到“正常升降”；
4. 将速度选择开关“低速-额速-倍速”切换到低速；
5. 按下暂不拔桩的对角线桩腿“就绪”带灯按钮（如：先按下 1#和 4#桩腿的就绪带灯按钮，则操作联动“桩腿上升”时，2#和 3#桩腿被拔桩，而 1#和 4#桩腿保持不动）；
6. 在联动控制区域按下“桩腿上升/平台下降”按钮，则对角线桩腿 2#和 3#开始上升，当观察到 2#和 3#桩腿的电机转矩从大负载变小之后，表明桩腿已经松动，便可以进行另外一条对角线桩腿的拔桩；

7. 同理，选择 2#和 3#桩腿带灯按钮，继续 1#和 4#桩腿的拔桩。

Operation steps:

1. Switch the "Off - control system - On" key switch to "control system on" in the cab;

2. Control authority knob "C.C.S. - LOCAL" to "C.C.S.";

3. The working condition selection switch "NORMAL-PRELOAD-RETORQUE"is switched to "NORMAL";

4. Switch the speed selection switch "LOW- RATER- MULTIPLIER" to low speed;

5. Press the "Ready" button with light of the diagonal leg of the pile that is not pulled temporarily (such as: press the ready button with light of the 1# and 4# leg first, then the 2# and 3# legs will be pulled while the 1# and 4# legs will remain motionless when the operation of the linkage "leg rise" is performed;

6. Press the "leg rise/hull down" button in the linkage control area, then the diagonal leg 2# and 3# begin to rise. When the leg load of the 2# and 3# legs is observed to decrease from the large load, it indicates that the leg has been loosened, and another diagonal leg can be pulled out;

7. Similarly, select 2# and 3# leg light buttons and continue to pull 1# and 4# leg.

⚠ **WARNING!**	1、拔桩前，需要掌握每条桩腿的入泥深度，潮水信息、海况条件等等综合信息，根据操船手册制定合理的拔桩方案； 2、拔桩操作前，一定要进行充分的冲桩，不得未冲桩就进行拔桩操作。如达到拔桩载荷时，桩腿仍未松动，需要进行持续的冲桩操作；； 3、拔桩操作只允许对角桩腿成对进行，即 1#、4#桩腿或 2#、3#桩腿“成对”地拔，禁止四条桩腿同时拔桩。 4、对角拔桩腿时，可交替操作。例如，首先进行 1#、4#桩腿对角拔桩操作时，在短时间内（不少于 3 分钟）对该两条桩腿进行持续拔桩，当 1#、4#桩腿松动后，需立即立即改拔 2#、3#桩腿。 5、在对角拔桩过程中，如仅有其中一条桩腿松动，需立即停止对该桩腿的拔桩动作，并对另一条桩腿进行边冲桩边拔桩，直至松动为止。

6、桩腿被拔松可依据以下信息综合判断：对角拔桩时，某条桩腿负载显示变小，可以初步判断该桩腿松动，此时需立即切换至另外的对角拔桩。

7、在整个拔桩作业过程中，确保每时每刻船体有足够的干舷，干舷的高度不得低于操船手册的要求。

1. Before pulling the pile, it is necessary to master the mud depth of each pile leg, tide information, sea conditions and other comprehensive information, and formulate a reasonable pile pulling plan according to the boat operation manual;

2, before pulling the pile operation, it is necessary to carry out sufficient punching the pile, not to pull the pile operation without punching the pile. If the pile leg is still not loose when the load is reached, it is necessary to carry out continuous punching operation;

3, the pile pulling operation only allows diagonal pile legs to be pulled in pairs, that is, 1#, 4# pile legs or 2#, 3# pile legs "in pairs", and it is forbidden to pull four pile legs at the same time.

4. When pulling the pile leg diagonally, it can be operated alternately. For example, when the 1# and 4# pile legs are pulled diagonally first, the two legs are continuously pulled in a short period of time (not less than 3 minutes), and when the 1# and 4# pile legs become loose, the 2# and 3# pile legs need to be immediately changed.

5. In the process of diagonal pile pulling, if only one of the pile legs is loose, it is necessary to immediately stop the pulling action of the pile leg, and pull the pile while punching the other pile leg until it is loose.

6. When the pile leg is pulled loose, the following information can be comprehensively judged: When the pile leg is pulled diagonally, the load display of a certain pile leg becomes smaller, and the pile leg can be preliminarily judged to be loose. At this time, it is necessary to switch to another diagonally pulled pile immediately.

7, in the entire process of pulling the pile, ensure that the hull has sufficient freeboard at all times, and the height of the freeboard shall not be lower than the

	requirements of the ship manual.

3.2.2.9 紧急停机操作 Emergency stop operation

当系统发生紧急故障，可快速拍下紧急停机按钮，停止当前运行动作，使危险不继续扩散。本系统有 5 处紧急停机按钮，分别位于集控台中面板和四个机旁控制箱。紧急停机按钮如下图所示。

When the system is in emergency, please press emergency stop button quickly to stop the action in case the danger continues to spread. There are five emergency stop buttons in the system, which are located in the upper panel of C.C.S. and four local control boxes respectively. "EMERGENCY STOP" button on C.C.S. is shown in the following figure.

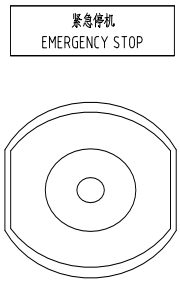

图 3.2.6 紧急停机

Fig 3.2.6 EMERGENCY STOP

NOTICE	1、紧急停机对制动器机械机构都有损伤，非紧急情况下不要使用； 2、升降系统的 5 处紧急停机具有同样的急停功能，紧急停机时，所有制动器快速制动； 1, the emergency shutdown has damage to the mechanical mechanism of the brake, do not use in non-emergency situations; 2. The 5 emergency stops of the jacking system have the same emergency stop function, and all brakes brake quickly when the emergency stops;

3.2.2.10 试灯消音和复位功能 Lamp test/mute and reset

当系统无报警故障时，按下“试灯/消音”按钮来测试控制面板的指示灯。这时面板上的所有指示灯和带灯按钮都应发亮同时蜂鸣器发出声响。

When operating the jacking system, pressing "LAMP TEST" button which to test indication lamps is normal or not, all the indication lamps and buttons with indication lamps on the panel should be light and the buzzer is chirping.

当系统处于故障状态，此时为了安全考虑，在故障排除后，需按下“复位”按钮后，才能重新起动液压泵站和电机，操作按钮才有效。

When the system is in malfunction, after the fault is eliminated, reset button should be pressed for safety consideration.

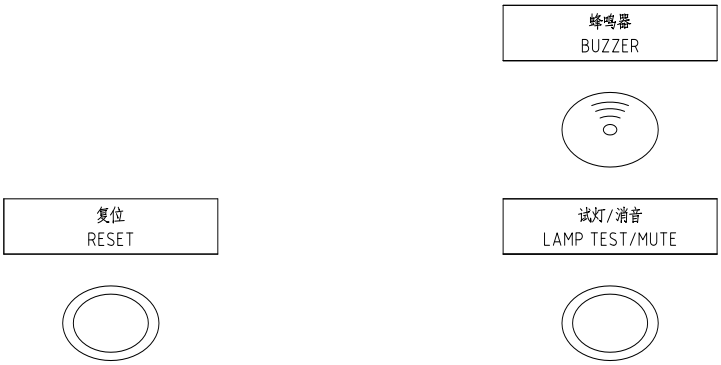

图 3.2.7 试灯消音、复位

Fig 3.2.7 Lamp test/mute and reset

3.2.2.11 倾斜忽略 Hull sloped ignore operation

船体倾斜忽略可以通过集中控制台上的倾斜忽略钥匙开关来控制，该钥匙只能由船体负责人保存和使用。

Hull sloped ignore can be controlled by the hull sloped ignore key switch on “C.C.S.”, the key can be only kept and used by the hull chief.

图 3.2.8 倾斜忽略开关

Fig 3.2.8 sloped ignore switch

当船体倾斜角度大于 0.5 度小于 0.8 度时，系统仅报警，相应的升降作业可继续进行。船体倾斜角度大于 0.8 度时，系统报警，升降操作无效。当打开倾斜

忽略钥匙开关，集中控制台上的“倾斜忽略”指示灯亮，系统可以绕过平台斜坡的保护，桩腿可以再次升高或降低。

When slope angle of the hull is more than 0.5 degree and less than 0.8 degree, the system only alarms and corresponding lifting operation can continued. When slope angle of the hull is more than 0.8 degree, the system alarms and the lever operation is ineffective. The Hull sloped ignore key switch on C.C.S. is used to ignore the condition. When the hull ignore is "ON"， "HULL SLOPED IGNORE" indication lamp on C.C.S. is light, the system can bypass the protection of the hull slope, and the leg can raise or lower again.

3.2.2.12 平台倾斜状态显示 Hull slope status display

集中控制台上装有电子水平仪和气泡水平仪用来显示整个平台的水平状态。

The electrical gradienter and the air bubble gradienter on C.C.S. are used to display level state of the hull.

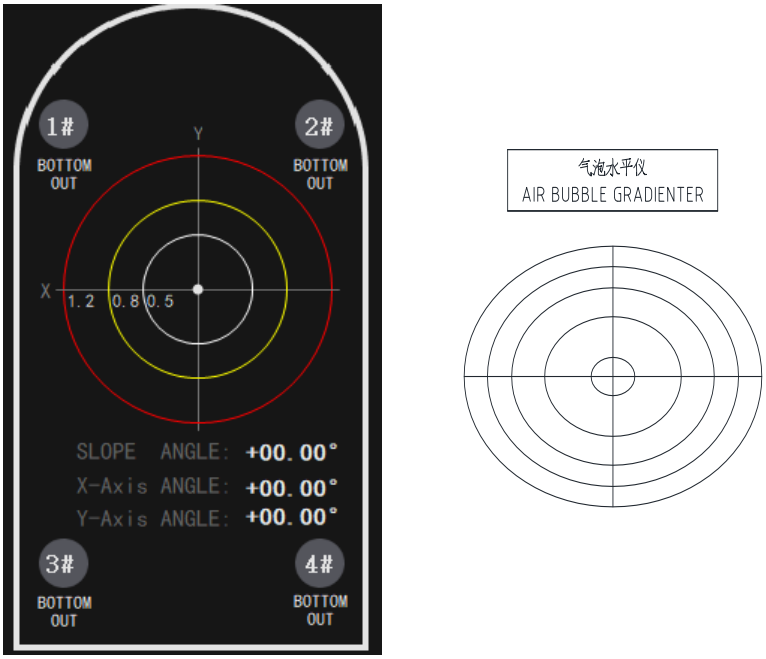

图 3.2.9 倾斜状态显示

Fig 3.2.9 slope status display

NOTICE!	电子水平仪显示的平台中心在平台水平坐标系的位置，指示偏向哪里则代表平台哪个位置是高点。 The electronic level shows the center of the platform of the platform in the

	horizontal coordinate system, indicating which position of the platform is the high point.

3.2.2.13 转矩调整 Retorque

当系统为下列报警停机状态时，将控制模式选择开关“正常升降-预压载-RETORQUE-RPD”打到“RETORQUE”，在触摸屏上进行转矩调整。

- 电机载荷不均衡报警；
- 单台电机负荷过载报警；

When the system is in any one of the following conditions, turn "NORMAL-PRELOAD-RETORQUE" switch to “RETORQUE”, and Retorque operations are be done on touch screen：

- The motor load imbalance and alarm;
- One single motor load overload and alarm.

操作步骤：

1. 在驾驶室将“关-控制系统-开”钥匙开关打到“控制系统开”；
2. 控制权限旋钮“集中控制-机旁控制”切到“集中控制”；
3. 工况选择开关“正常升降-预压载-RETORQUE-RPD”切换到“RETORQUE”；
4. 按下 RE-TORQUE 按钮即进入 RETORQUE 状态。按下 按钮选择需要进行“RETORQUE”的电机，当被选电机有效时，指示灯变绿，操作者可以通过在 +00% 区域来设置具体转矩值，当设置完成后按确认按钮 CONFIRM 。

Operation steps:

1. Switch the "Off - control system - On" key switch to "control system on" in the cab;
2. Control authority knob "C.C.S. - LOCAL" to "C.C.S.";
3. The working condition selection switch "NORMAL-PRELOAD- RETORQUE" is switched to "RETORQUE";

4. pressing the button

enters into re-torque interface.

press motor button which needs retorque, it turns to green when it is chosen, and set torque value at the area

, when it is finished press enter button

until the load of the jacking unit not change obviously.

3.2.3 机旁控制 Local operation

3.2.3.1 控制位置选择 The choice of control right

系统默认的控制位置为集中控制台，若需在机旁操作时，按下列步骤，权限转至机旁。

1、“关-控制系统-开”钥匙开关打到“控制系统开”；

2、控制权限旋钮“集中控制-机旁控制”切到“机旁控制”；

3、集中控制台上控制模式选择开关“正常-预压载-转矩调整”选择“正常”；

4、在机旁控制箱上按下“机旁控制开”带灯按钮，“机旁控制开”带灯按钮亮时，表明可以进行机旁操作。

The default control position of the system is the C.C.S.. If you need to operate on local control box, follow the following steps to transfer the permission to the local.

1, "off - control system - on" key switch to "control system on";

2, Control authority knob "C.C.S. - LOCAL" to "LOCAL";

3, The working condition selection switch "NORMAL-PRELOAD-RETORQUE" is switched to "NORMAL";

4. Press the "Local on" button with light on the local control box. When the "local control on" button with light is on, it indicates that the local operation can be carried out.

无需机旁操作时，再次按下“机旁控制开”带灯按钮，此时，“机旁控制开”带灯按钮灭，操作权限回到集中控制台。

When local control isn’t needed, press “LOCAL CONTROL ON” button again, at the same time, “LOCAL CONTROL ON” lamp indication put out, C.C.S. get operation permissions.

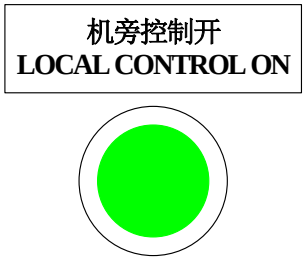

图 3.2.10 机旁控制开按钮

Fig 3.2.10 Local control button

3.2.3.2 机旁紧急停机操作 Emergency stop operation on local

机旁紧急停机操作通过机旁控制箱上的“紧急停机”按钮实现。

"EMERGENCY STOP" button on local control box is the same as the “C.C.S.”。

3.2.3.3 桩腿升降控制 Leg jacking control

在控制位置转至机旁后，在机旁控制箱上通过“平台下降/桩腿上升”和“平台上升/桩腿下降”带灯按钮来实现电动升降装置的机旁控制。当按下“平台下降/桩腿上升”后，按钮亮，表明桩腿上升，此时，按下“停止”按钮，桩腿停止上升，带灯按钮灭；桩腿下降操作同理。

After the control position is transferred to the local control box,the local control of the electric jacking device is realized by the button of "leg raise/hull lower" and "leg lower/hull raise " with light on the local control box. When pressing "leg raise/hull lower" , the button will light up, indicating that the pile leg will rise. At this time, press the "Stop" button, the pile leg will stop rising, and the button with light will turn off; The same is true for leg lowering.

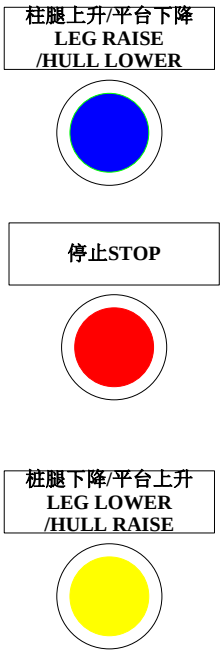

图 3.2.11 机旁升降控制

Fig 3.2.11 Local control jacking

NOTICE！	在机旁控制时，只能进行桩腿的单独升降。 When it is local control, separate control of the leg is only allowed. 进行桩腿升降动作时，舷选择位置为 0，不能选择单舷。 When lifting the pile leg, the selection chord of the side is 0, and the single side cannot be selected.

3.2.3.4 机旁试灯消音、故障复位 Lamp test/mute and reset on local

当系统无报警故障时，按下“试灯/消音”按钮来测试控制面板的指示灯。这时面板上的所有指示灯和带灯按钮都应发亮同时蜂鸣器发出声响。

当系统有故障时，按下“试灯/消音”按钮可以消除蜂鸣器的报警声。

升降系统有报警信号后，需要先分析报警的原因，在分析该报警不会影响平台安全，如果权限处于机旁时，在故障排除后，需机旁按下“复位”按钮后，操作按钮才有效。

When the system has no alarm failure, press the "Test light/mute" button to test the indicator light of the control panel. At this time, all indicators and buttons with lights on the panel should light up and the buzzer sounds.

When the system has alarm failure, press the "Test light/mute" button to

eliminate the alarm sound.

After the jacking system has an alarm signal,it is necessary to analyze the cause of the alarm first,and the alarm will not affect the safety of the platform.If the authority is at the local control box, you need to press the Reset button on the local control box after the fault is rectified to make the operation button take effect.

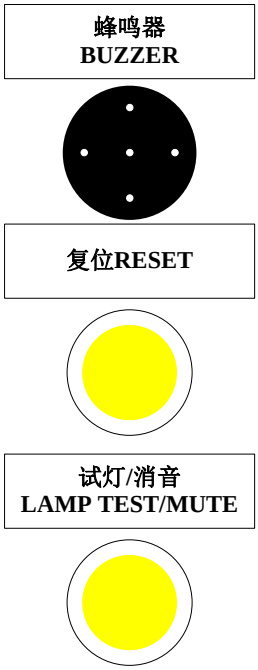

图 3.2.12 蜂鸣器、消音按钮

Fig 3.2.12 Buzzer and alarm confirmation button

3.2.3.5 电磁制动器释放 Electromagnetic brake release

当系统需维修电磁制动器时，可通过“弦选择”、“电磁制动器选择”以及“单个电磁制动器释放”开关来判断电磁制动器是否已损坏。或者，当系统需释放应力时，也可通过这一系列的选择开关来实现。如果制动释放成功，则单个制动释放灯亮，否则灯灭并报警。

When electromagnetic brake need to detect the limit switch is normal or not, firstly, according to the abnormal motor to choose the chord and electric brake, secondly, push down the “Electromagnetic Brake Release” which can open the electric brake.

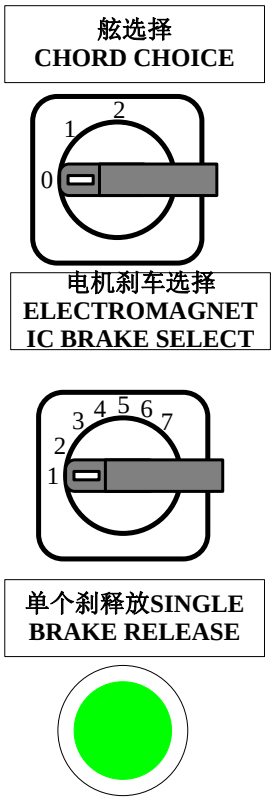

图 3.2.13 单个电磁制动器释放

Fig 3.2.13 electromagnetic brake release

3.3 系统停机 system down

系统停机分为三种型式：临时短时间停机，长时间停机以及紧急停机。

There are three types of system outages: temporary short stop, long stop, and emergency stop.

3.3.1 临时停机 temporary short stop

临时停机是指在给定的时间范围内升降操作完成，但是在近期可能需要额外的操作，临时停止操作（一般不超过 30min）。则可以通过执行以下步骤将系统暂时置于安全状态：

停止升降操作（在驾驶室操作台上按下联动停止按钮），所有升降电机停止运行，刹车制动

Temporary shutdown refers to the completion of lifting operations within a given time range, but additional operations may be required in the near future, and temporary stop operations (generally not more than 30 minutes). You can temporarily

put the system in a secure state by performing the following steps:

Stop lifting operation (press the linkage stop button on the operating platform in the cab), all lifting motors stop running, brake braking;

NOTICE！	建议临时停机内保持变频驱动器电源，不要频繁合闸。 It is recommended to keep the inverter driver power supply during the temporary shutdown, and do not close frequently.

3.3.2 长时间停机 long stop

长时间停机是需要长期完全关闭系统的情况下，具体操作如下：

1)、停止升降操作（在驾驶室操作台上按下联动停止按钮），所有升降电机停止运行，刹车制动；

2)、在驾驶室停止泵站并将“关-控制系统-开”打到“控制系统关”位置；

3)、依次断开变频柜的电源和润滑系统电源，控制系统电源可以打开，以便实时观察水平的水平姿态。

Long downtime is the need to completely shut down the system for a long time, the specific operations are as follows:

1) stop lifting operation (press the linkage stop button on the operating platform in the cab), all lifting motors stop running, brake braking;

2) Stop the pump station in the cab and switch "off - control system - On" to the "control system off" position;

3) Disconnect the power supply of the inverter cabinet and the power supply of the lubrication system in turn, and the power supply of the control system can be turned on to observe the horizontal attitude of the level in real time.

NOTICE!	长期停机后确认电机和变频器加热器正在通电工作。 After long-term shutdown, confirm that the motor and inverter heater are energized. 保持所有的柜门关闭，以防止高湿度的空气进入内部产生冷凝。 Keep all cabinet doors closed to prevent high humidity air from entering the interior and creating condensation.

3.3.3 紧急停机 emergency stop

紧急停机是指发生紧急状态下，需要立即停止升降动作，此时可以拍下“紧急停机”旋钮。整个系统共有五处设置了紧急停机旋钮，分别位于集中控制台（1个）和机旁控制箱（每个机旁控制箱 1 个，共 4 个）。

Emergency stop means that in the event of an emergency, it is necessary to stop the lifting action immediately, at this time, you can shoot the "emergency stop" knob. There are five emergency stop knobs in the whole system, which are located in the central console (1) and the local control box (1 for each local control box, a total of 4)

NOTICE	**拍下紧急停机旋钮后，需要将旋钮复位，并按下复位按钮，否则系统无法恢复正常工作。** **After taking the emergency stop knob, you need to reset the knob and press the reset button, otherwise the system cannot resume normal operation.**

3.4 系统保持 system hold status

平台在拖航或作业保持工况下，升降系统可以停机保持，具体按照章节 3.3.2 长时间停机执行，且根据实际的环境载荷，在固桩架围井处（主甲板和固桩架顶部）插入适量的固桩块，保证桩腿的稳定。

When the platform is under towing or operation maintenance conditions, the jacking system can be shut down and maintained. The specific execution shall be carried out according to Section 3.3.2 Prolonged shutdown. In addition, according to the actual environmental load, an appropriate amount of solid pile blocks shall be inserted in the well enclosure of the pile reinforcement frame (main deck and top of the pile reinforcement frame) to ensure the stability of the pile legs.

3.5 报警处理 Alarm failure

升降系统报警分为三级：I 级——只报警，II 级——停止升降动作并报警，III 级——停止泵站电机运行并报警；其中，***II 级和 III 级报警，必须首先消除故障后，按下“复位”按钮，系统才能继续动作***。下表为触摸屏中提示的报警内容及相应处理措施，其中，桩腿故障以 1#桩腿为例，其他桩腿报警参考 1#桩腿报警处理。

The jacking system alarm is divided into three levels: level I - only alarm, level II - stop lifting action and alarm, level III - stop motor operation of the pump station and alarm; Among them, the level II and III alarms must first eliminate the fault, press the "reset" button, the system can continue to operate. The following table is the alarm content and corresponding treatment measures prompted by the touch screen. For leg failure, 1# leg is taken as an example. For other leg alarms, refer to 1# leg alarm.

序号 NO.	等级 grade	报警内容 Alarm content	故障排除 Trouble removal
1.	III	1#桩腿紧急停机报警(消除后需复位) 1#LEG emergency stop alarm (Reset required after elimination)	依次检查集控台及各机旁控制箱的急停按钮，复位按下的急停按钮。 Check the emergency stop button of the centralized console and the control box next to each machine, and reset the emergency stop button pressed.
2.	I	平台倾斜超限报警（>0.5°） slope exceeding 0.5, inclination pre-alarm	检查平台的倾斜状态，调整平台水平状态至正常范围。Check the tilt status of the platform and adjust the level status of the platform to the normal range.
3.	II	平台倾斜超限停机（>0.8°） slope exceeding 0.8 degree, inclination alarm and shutdown	检查平台的倾斜状态，调整平台水平状态至正常范围。 Check the tilt status of the platform and adjust the level status of the platform to the normal range.
4.		联动快停报警 Link control fast stop alarm	检查其他桩腿是否存在快停报警，可以查看控制条件界面，该界面可以查看停机报警的列表。 To check whether there is a quick stop alarm on other piles, you can view the control condition interface, which can view the list of stop alarms.
5.	II	速度选择错误 Speed selection error	检查速度开关的选择，平台模式下速度不能选择倍速。 Check the selection of the speed switch. The speed cannot be multiplier in platform mode.
6.	II	1#桩腿上限位报警(消除后需复位) 1#LEG Up limit alarm (Reset required after elimination)	桩腿已到达上限位，只能执行桩腿上升或平台下降操作。 The leg has reached the upper limit and can only be raised or lowered.

7.	II	1#桩腿下限位报警(消除后需复位) 1#LEG Low limit alarm (Reset required after elimination)	桩腿已到达下限位，只能执行桩腿下降或平台上升操作。 The leg has reached the lower limit and can only be lowered or the platform raised.
8.	II	1#桩腿下限位预报警(消除后需复位) 1#LEG Low limit pre-alarm (Reset required after elimination)	如果在设置里启动下限位预报警，桩腿达到下限位预报警后只能执行桩腿下降或平台上升操作，又或者关闭在设置里关闭下限位预报警。 If the lower limit warning alarm is activated in the setting, the pile leg can only be lowered or the platform can rise after reaching the lower limit warning alarm, or the lower limit warning alarm can be turned off in the setting.
9.	I	船艏制动电阻温度高预报警(消除后需复位) 1#LEG brake resistor high temperature Pre-alarm(Reset required after elimination)	制动电阻温度达到预报警值，检查制动电阻风机是否打开，风机出风口是否堵塞，如果温度继续上升，只能做升平台或者升桩腿操作，或者停止动作打开风机等待制动电阻温度降低。 If the brake resistance temperature reaches the predicted alarm value, check whether the brake resistance fan is turned on and whether the fan outlet is blocked. If the temperature continues to rise, you can only lift the platform or the pile leg, or stop the action and open the fan until the brake resistance temperature decreases.
10.	II	船艏制动电阻温度高停机报警(消除后需复位) 1#LEG brake resistor high temperature stop alarm(Reset required after elimination)	制动电阻温度达到停机报警值，检查制动电阻风机是否打开，风机出风口是否堵塞，此时只能做升平台或者升桩腿操作，或者停止动作打开风机等待制动电阻温度降低。 When the brake resistance temperature reaches the stop alarm value, check whether the brake resistance fan is opened and whether the fan outlet is blocked. At this time, you can only lift the platform or raise the pile leg, or stop the action and open the fan until the brake resistance temperature decreases.
11.	I	1#桩腿 X#升降单元过载预报警(消除后需复位) 1#LEG X# jacking unit overload pre-alarm (Reset	参考 3.6.7 检查升降单元超载 Refer to 3.6.7 Checking Lifting unit overload

		required after elimination)	
12.	II	1#桩腿 X 升降单元过载停机报警(消除后需复位) 1#LEG X# jacking unit overload and stop alarm (Reset required after elimination)	参考 3.6.7 检查升降单元超载 Refer to 3.6.7 Checking Lifting unit overload
13.	I	1#桩腿升降单元负载不均预报警报警(消除后需复位) 1#LEG lifting unit Unbalanced alarm (Reset required after elimination)	查看单个升降单元是否受力不均，检查升降单元是否过载或者力偏小，如果过载可参考 3.6.7。可用 RETORQUE 模式将升降单元负载调均匀 Check whether a single lifting unit is stressed unevenly, check whether the lifting unit is overloaded or the force is small. If the load is excessive, see 3.6.7. Adjust the load of the lifting unit evenly in RETORQUE mode
14.	II	1#桩腿升降单元负载不均停机报警报警(消除后需复位) 1#LEG lifting unit Unbalanced stop (Reset required after elimination)	查看单个升降单元是否受力不均，检查升降单元是否过载或者力偏小，如果过载可参考 3.6.7。可用 RETORQUE 模式将升降单元负载调均匀 Check whether a single lifting unit is stressed unevenly, check whether the lifting unit is overloaded or the force is small. If the load is excessive, see 3.6.7 . Adjust the load of the lifting unit evenly in RETORQUE mode
15.	I	1#桩腿过载预报警(消除后需复位) 1#LEG overload pre-alarm (Reset required after elimination)	桩腿负载预报警，参考 3.6.7 检查升降单元超载 Pile leg load forecast alarm, refer to 3.6.7 check lifting unit overload
16.	II	1#桩腿过载停机报警(消除后需复位) 1#LEG overload stop alarm (Reset required after elimination)	桩腿负载停机报警，参考 3.6.7 检查升降单元超载 Leg load stop alarm, refer to 3.6.7 check lifting unit overload
17.	II	1#桩腿 X#电机过流停机报警(消除后需复位) 1#LEG X#Motor overcurrent alarm (Reset required after elimination)	电机电流过高报警，检查升降单元刹车是否完全打开，齿轮箱是否正常。 Motor current is too high alarm, check whether the lifting unit brake is fully opened, gear box is normal.

18.	I	1#桩腿 X#电机制动器磨损报警(消除后需复位) 1#LEG X#E-brake Wear alarm (Reset required after elimination)	电机制动器磨损，请更换备件。 Motor brake wear, please replace the spare parts.
19.	II	1#桩腿 X#电机制动器高温报警(消除后需复位) 1#LEG X#E-brake High temperature alarm (Reset required after elimination)	制动器温度高报警，检查制动器是否完全打开或者制动器温度开关是否正常。 Brake temperature high alarm, check whether the brake is fully opened or whether the brake temperature switch is normal.
20.	II	1#桩腿 X#电机制动器故障(消除后需复位) 1#LEG X#E-brake Failure (Reset required after elimination)	制动器打开或者关闭异常报警，检查制动器状态检测开关或者制动器的整流器是否工作正常。 Brake opening or closing abnormal alarm, check the brake status detection switch or brake rectifier is working normally.
21.	I	1#桩腿移相变压器温度高预报警(消除后需复位) 1#LEG phase-shifting transformer high temperature Pre-alarm(Reset required after elimination)	移相变压器高温预报警，检查移相变压器的风机是否打开，风机的出口是否顺畅，移相变压器温度检测温度的 PT100 传感器是否正常。 Phase shifting transformer high temperature forecast alarm, check whether the fan of the phase shifting transformer is turned on, whether the exit of the fan is smooth, and whether the PT100 sensor for phase shifting transformer temperature detection is normal.
22.	II	1#桩腿移相变压器温度停机报警(消除后需复位) 1#LEG phase-shifting transformer high temperatur Stop alarm (Reset required after elimination)	移相变压器高温停机报警，检查移相变压器的风机是否打开，风机的出口是否顺畅，移相变压器温度检测温度的 PT100 传感器是否正常。 Check whether the fan of the phase-shifting transformer is turned on, whether the exit of the fan is smooth, and whether the PT100 sensor for temperature detection of the phase-shifting transformer is normal.
23.	II	1#桩腿 X#电机速度异常(消除后需复位) 1#LEG X#Motor speed abnormal alarm (Reset required after elimination)	X#电机速度速度与其他电机差异超过报警值，检查电机的刹车、齿轮箱、编码器接线和状态。 X# Motor speed The speed difference from other motors exceeds the alarm value, check the brake, gear box, encoder wiring and status of the motor.
24.	II	1#桩腿 X#逆变单元公共报警 1#LEG VFD (消除后	逆变单元公共报警，查看逆变单元面板上的故障代码，查看 ACS880 手册，对应故障代码的检查

		需复位) 1#LEG VFD X#inverter unit Comprehensive Failure alarm (Reset required after elimination)	方法。 For the inverter unit public alarm, view the fault code on the inverter unit panel, and refer to the ACS880 manual to check the fault code.
25.	II	1#桩腿 1-1 逆变通讯故障报警(消除后需复位) 1#LEG VFD X#inverter unit Communication Failure alarm (Reset required after elimination)	逆变单元通讯故障，检查逆变单元上网线和其插头，检查逆变单元通讯卡 FPNO 上指示灯的状态，并对比其他正常指示灯及查看通讯卡手册。 If the inverter unit communication fails, check the inverter unit Internet cable and its plug, check the status of the indicator on the inverter unit communication card FPNO, and compare other normal indicators and check the communication card manual.
26.	II	1#桩腿电机超速停机报警(消除后需复位) 1# leg motor overspeed stop alarm (need to reset after elimination)	电机或者桩腿超速报警，检查绝对值编码器或者电机增量编码器是否安装正常。两种编码器是否工作正常或者指示灯正常。状态指示灯示意可以查看编码器手册。 Motor or leg overspeed alarm, check whether the absolute value encoder or motor incremental encoder is installed normally. Whether the two encoders work properly or whether the indicator is normal.The status indicator allows you to view the encoder manual.
27.	II	1#桩腿润滑系统故障过载报警(消除后需复位) 1#LEG lubrication system overlord alarm (Reset required after elimination)	润滑系统电机过载，请检查润滑系统电机或者泵是否堵转，管路是否堵塞。 The motor of the lubrication system is overloaded, please check whether the motor or pump of the lubrication system is blocked, and whether the pipeline is blocked.
28.	I	1#桩腿润滑系统滤器堵塞报警(消除后需复位) 1#LEG lubrication system filter blocking alarm (Reset required after elimination)	润滑系统滤器堵塞报警，请检查管路是否堵塞。 Lubrication system filter blocked alarm, please check whether the pipeline is blocked.
29.	I	1#桩腿润滑系统油位低报警(消除后需复位)	润滑系统低液位报警，请补充润滑脂。 Lubrication system low level alarm, please add

		1#LEG lubrication system oil level low alarm (Reset required after elimination)	grease.
30.	II	1#桩腿控制电源失效报警(消除后需复位) 1#LEG control unit Control power supply failurealarm (Reset required after elimination)	控制电源关闭，请检查桩腿控制单元内电源是否工作正常，断路器是否闭合。 The control power is off. Please check whether the power supply in the pile leg control unit works normally and the circuit breaker is closed.
31.	II	1#桩腿变频器接地故障报警(消除后需复位) 1#LEG VFD insulation low alarm (Reset required after elimination)	变频器接地故障，请排查该变频器电机的绝缘或者变频器内的绝缘。 If the frequency converter is grounded, check the insulation of the motor or the insulation in the frequency converter.
32.	II	1#桩腿变频柜整流模块故障报警(消除后需复位) 1#LEG VFD rectifier module Failure alarm (Reset required after elimination)	变频柜整流模块故障，请查看整流模块对应面板故障代码，查看 ACS880 二极管整流手册，对应故障代码的检查方法。 If the rectifier module of the frequency converter cabinet is faulty, check the fault code of the corresponding panel of the rectifier module, and check the troubleshooting method for the fault code in the ACS880 diode rectifier manual.
33.	II	1#桩腿变频柜制动模块故障报警(消除后需复位) 1#LEG VFD brake module Failure alarm (Reset required after elimination)	变频柜制动模块故障，请查看制动模块对应面板故障代码，查看 ACS880 制动单元手册，对应故障代码的检查方法。 If the brake module of the inverter cabinet is faulty, please check the fault code of the corresponding panel of the brake module, and check the manual of the ACS880 brake unit for the check method of the fault code.
34.	II	1#桩腿远程 IO 模块通讯故障 LEG 1 ET200 Communication Failure	远程 IO 模块通讯故障，检查该桩腿控制单元内网线和其插头，交换机是否工作正常。 The remote I/O module communication is faulty. Check whether the network cable, plug and switch in the pile leg control unit work normally.
35.	II	1#桩腿 X 电机过载(热敏电阻)(消除后需复位)	电机过载，请检查电机制动器是否完全打开，齿轮箱是否正常。

		1#LEG X#motorWinding temperature high pre-alarm (Reset required after elimination)	The motor is overloaded, please check whether the motor brake is fully opened and the gear box is normal.

3.6 故障处理 Fault process

3.6.1 倾角传感器故障 Angel sensor fault

⚠警告！ WARNING!	电子水平仪对升降系统来说至关重要，当桩腿触底以后，电子水平仪可以实时监测平台的水平姿态，并提供安全保护；若当平台升离水面以后，操作人员屏蔽此报警，可能导致平台或人员的生命安全风险，请一定要慎重操作。 The electronic level is very important for the lifting system, when the pile leg touches the bottom, the electronic level can monitor the horizontal posture of the platform in real time, and provide safety protection; If the operator shields this alarm after the platform rises from the water surface, it may lead to the life safety risk of the platform or personnel, please be sure to operate with caution.

当升降系统的倾角传感器故障后，操作人员需要及时进行检修；若在检修期间需要应急进行平台升降操作，可以旁通电子水平仪来继续平台的升降操作。

When the tilt sensor of the jacking system fails, the operator needs to repair it in time; If the platform jacking operation needs to be carried out in an emergency during the maintenance, the electronic level can be bypass to continue the jacking operation of the platform.

操作步骤：

1. 观察气泡水平仪的状态，确保气泡水平仪能正常工作，并能正确指示平台的水平姿态；

2. 在驾驶室将“关-船倾忽略-开”钥匙开关打到“开”；

3. 继续平台的升降操作并时刻关注气泡水平仪的水平姿态，确保倾斜角度在合理范围内。

Operation steps:

1. Observe the status of the bubble level to ensure that the bubble level can work

normally and correctly indicate the horizontal posture of the platform;

2. Turn the key switch of "Off - ship tilting Ignore - On" to "On" in the cab;

3. Continue the lifting operation of the platform and always pay attention to the horizontal posture of the bubble level to ensure that the tilt Angle is within a reasonable range.

注意！ NOTICE	1）平台在航行过程中，由于风浪原因会导致倾斜角度超过报警值，因此，操作人员可以将倾斜保护关掉，但桩腿触底后一定要记住将倾斜忽略关闭； 2）倾角传感器修复后，要根据平台水平姿态对倾斜角度进行标定。 1) During the course of the platform sailing, the tilt Angle will exceed the alarm value due to wind and waves, so the operator can turn off the tilt protection, but remember to ignore the tilt after the pile leg touches the bottom; 2) After the inclination sensor is repaired, the inclination Angle should be calibrated according to the horizontal attitude of the platform.

3.6.2 变频器/电机/电磁制动器故障 Inverter/motor/electromagnetic brake failure

警告！ WARNING!	为保证升降系统的安全，不是在紧急时刻，需要确保平台升降过程中所有升降单元都参与工作（当发现系统的元件故障时，应当第一时间进行检修，而不是直接应急旁通），电机旁通功能只有当系统故障出现后，且平台因外部环境等因素导致需要紧急升降，此时才会使用此功能。 In order to ensure the safety of the lifting system, it is necessary to ensure that all lifting units are involved in the work during the lifting of the platform (when the components of the system are found to be faulty, they should be repaired at the first time, rather than directly emergency bypass). The emergency bypass function is only available when the system fails, and the platform needs emergency lifting due to external environment and other factors. This function is used only at this time.

注： 绝大部分电磁制动器故障是刹车的状态检测开关故障，用户应当第一时间检查接近开关状态（接近开关松动），或接线有松动，或对应的 I/O 模块通道有问题，先进行外部故障排查。

Note: Most of the electromagnetic brake fault is the brake status detection switch fault, the user should first check the proximity switch status (proximity switch loose), or the connection is loose, or the corresponding I/O module channel problem, first external troubleshooting.

操作步骤：

1. 确认故障变频器/电机/电磁制动器的序号；
2. 在驾驶室触摸屏中选择待旁通的故障升降单元；（详见章节 2.4.15）
3. 继续升降系统的操作

Operation steps:

1. Confirm the serial number of the faulty inverter/motor/electromagnetic brake;
2. Select the fault lifting unit to be bypassed in the cab touch screen;
3. Continue to operate the lifting system.

警告！ **WARNING!**	1）升降系统单桩只能旁通一个升降单元，即变频器、电机、电磁制动器同时故障时，只能在一个升降单元里，不能旁通 1 号电机和同时旁通 2 号变频器； 2）单个电机旁通后，会强制打开电机刹车，此时需要在触摸屏上和电机旁确认刹车已经打开，为了安全，需要手动打开刹车，并保持刹车处于打开锁紧状态，确保制动器在电机运行过程中，时刻处于打开状态，不然可能会导致桩腿齿条损坏或超载等其它故障。 1) The single pile of the lifting system can only bypass one lifting unit, that is, when the frequency converter, motor and electromagnetic brake fail at the same time, it can only be in a lifting unit, and No. 1 motor and No. 2 frequency converter can not be bypassing at the same time; 2) After a single motor by-pass, the motor brake will be forced to open, at this time, it is necessary to confirm that the brake has been opened on the touch screen and beside the motor, to ensure that the brake is always open during the operation of the motor, for safety , the brakes need to be manually opened and keep the brake open and

[redacted]	locked, otherwise it may lead to other failures such as damage to the rack of the pile leg or overload.

3.6.3 制动电阻故障 Brake resistance fault

升降系统的制动电阻用于消耗桩腿下降或平台下降时电机所发出的电能，当制动电阻出现故障时，应当第一时间进行检修，可能的故障原因有：

The braking resistance of the lifting system is used to consume the electric energy emitted by the motor when the pile leg falls or the platform falls. When the braking resistance fails, it should be repaired at the first time. The possible reasons for the failure are:

1) 个别制动电阻管绝缘损坏，电阻箱内有未连接的备用电阻管，用户可以对故障电阻进行更换。The insulation of individual brake resistance tubes is damaged. There is a spare resistance tube in the resistance box that is not connected. Users can replace the faulty resistance.

2) 电阻箱内的电阻进水受潮（测量电阻对地绝缘），用户可以打开加热器和风机，对电阻进行除潮。The resistance inside the resistance box is exposed to water and moisture (measure the insulation between the resistance and the ground). Users can turn on the heater and fan to remove moisture from the resistance.

3) 当制动电阻失效时，平台只能上升而不能下降，否则会导致逆变器故障。When the brake resistance fails, the platform can only rise and not fall, otherwise it will cause the inverter failure.

3.6.4 绝对值编码器故障 Absolute encoder fault

升降系统的绝对值编码器用于检测桩腿的高度和速度，当出现绝对值编码器故障时，应当第一时间进行排查，可能的故障原因有：

The absolute value encoder of the lifting system is used to detect the height and speed of the pile leg. When the absolute value encoder fails, it should be investigated at the first time. The possible reasons for the failure are:

- 接线松动（电源接线或 PROFINET 电缆）或者插头松掉；

- 编码器联轴器松脱；
- 编码器本体故障。
- The cable is loose (power cable or PROFINET cable) or the plug is loose;
- Encoder coupling loose;
- The encoder is faulty.

用户可以通过编码器上的故障指示灯进行判断。

The user can judge by the fault indicator on the encoder .

当绝对值编码器故障确认短时间无法修复，可以通过 HMI 画面上的编码器旁路按钮旁路该故障编码器，方便升降系统继续运行，但此时需要人员实时监控并记录桩腿的实际高度。

When it is confirmed that the absolute encoder fault cannot be repaired in a short time, the faulty encoder can be bypasses through the encoder bypass button on the HMI screen to facilitate the continuous operation of the lifting system, but at this time, personnel need to monitor and record the actual height of the pile leg in real time.

3.6.5 制动器磨损 Brake wear

升降控制系统检测到制动器磨损时，会引发制动器磨损/故障报警。这可能指示着制动器允许的磨损距离超出限制（由于磨损或其他问题），或者制动器本身出现实际故障。

When the lift control system detects brake wear, it triggers a brake wear/failure alarm. This may indicate that the brake is allowed to wear beyond the limit (due to wear or other problems), or that the brake itself is actually malfunctioning.

升降动作时，如果发生制动器磨损警告，此警告允许升降系统继续运行，但应该尽早进行故障排除并复位。

If a brake wear warning occurs during the lifting action, this warning allows the lifting system to continue operating, but should be troubleshooting and reset as soon as possible.

3.6.6 绝缘故障 Insulation fault

升降系统设计用于检测每套变频柜的主回路与地之间绝缘电阻的大小。在变频器上电情况下，整个次级系统回路都会被检测到，包括（变压器的二次侧、电机等）。 如果测量的绝缘电阻低于预定的设定值，变频器上绝缘低指示灯将亮，HMI 上将显示一条绝缘低警告信息。此警告允许升降系统继续运行（可以旁通绝缘低电机），但应该尽早进行故障排除并复位.对故障位置进行排查可能性很多，拆下每个电机的线路逐步排除。

The lifting system is designed to detect the insulation resistance between the main circuit and the ground of each converter cabinet. When the inverter is powered on, the entire secondary system loop is detected, including the secondary side of the transformer, the motor, etc. If the measured insulation resistance is below the predetermined set value, the low insulation indicator light on the inverter will light up and a low insulation warning message will be displayed on the HMI. This warning allows the lift system to continue operating (it can bypass the low-insulation motor), but it should be troubleshooting and reset as soon as possible. There are many possibilities for troubleshooting the fault location, and the line of each motor is removed gradually.

3.6.7 升降装置超负载情况 jacking device overload condition

如果升降系统中的任何一个的负载（在集中控制台显示屏上可以观察到）超过保护值（齿轮箱极限负载）， 则应该立即停止所有升降操作并进行以下检查：

If the load on any one of the lifting systems (which can be observed on the centralized console display) exceeds the protection value (gearbox limit load), all lifting operations should be stopped immediately and the following checks should be carried out:

- 回放历史并查找任何过载情况
- 检查升降减速箱输入轴是否有过热情况
- 检查油位（视油孔的中线）

- 观察透气帽的情况
- 检查楔形块和 K 型板
- 检查齿条齿和顶升爬升齿轮是否变形或凹陷
- 检查爬升齿轮和齿条
- 检查齿条齿面是否过度磨损
- 对齿轮箱进行全面检查
- 对制动器进行全面检查
- 对电机及编码器进行全面检查,尤其是编码器的联轴节锁紧螺钉。
- Play back the history and look for any overloads
- Check whether the input shaft of the reducer is overheated
- Check the oil level (see the middle line of the oil hole)
- Observe the condition of the ventilated cap
- Check the wedges and K-plates
- Check the rack teeth and jacking climb gears for deformation or depression
- Check the climbing gear and rack
- Check the rack face for excessive wear
- Complete gearbox inspectio
- Perform a full check of the brakes
- A thorough inspection of the motor and encoder,Especially the encoder coupling locking screw.

4 检查与维修 Check and Maintenance

4.1 系统及主要零部件

系统及主要部件的健康检查和维护保养请参见下表 Please refer to the table below for health checks and maintenance of the system and major components：

序号 No	部套名称 Part name	检查项目 Inspection items	检查/更换周期 Inspection /Replacement cycle	具体实施方法 Specific implementation methods	备注 Remark
1.	整套系统 Entire system	整套系统全面健康检测 Comprehensive health check of the entire system	每 60 月 Every 60 months	联系售后工程师 Contact the after-sales engineer	
2.	齿轮箱全面检查 Comprehensive inspection of the gearbox	全面健康检查 Comprehensive health check	每 30 月 Every 30 months	联系售后工程师 Contact the after-sales engineer	检查轴承、齿轮、密封件磨损情况 Inspect the wear condition of bearings, gears, and seals
3.	电机及制动器 Motor and brake	全面健康检查 Comprehensive health check	每 60 月 Every 60 months	联系售后工程师 Contact the after-sales engineer	
4.	润滑油路 Lubrication system	整体清洁、保养 Overall cleaning,	每 24 月 Every 24 months	联系售后工程师 Contact the after-sales	

		maintenance		engineer	

此部分维修保养内容请联系供方售后工程师。Please contact the supplier's after-sales engineer for maintenance and repair details related to this part.

4.1.1 齿轮箱油位及供油情况 Oil level in the gearbox and oil supply and oil drain

检查周期 Inspection cycle：	每季度 Every quarter
不良后果 Negative consequences：	润滑不足，齿轮箱温度升高，最终导致故障和损坏 Insufficient lubrication, increased gearbox temperature, resulting in failure and damage.
注意事项 Cautions：	1、确认电动升降系统已停止。Confirm that the Hydraulic jacking system is stopped 2、确认供给同种牌号的润滑油。Confirm that the lubricant oil supplied is the same brand.
专用工具 Special tools：	
检查方法 Inspection method：	检修顺序 Sequence of maintenance work 1、 每个季度检查一次油位，齿轮箱在静止状态下，通过油镜观察，如齿轮箱润滑油油位低于油镜可视位置，齿轮箱需加润滑油，齿轮箱油位须处于油镜中部。 Check the oil every quarter, When the gearbox is in the static condition, observe it through the sight glass. If the lubricating oil level of the gearbox is lower than the visible position of the sight glass, add lubricating oil to the gearbox, and the oil level of the gearbox must be in the middle of the sight glass. 2、 检查润滑油的清洁度和质量，观察润滑油是否浑浊、污染或含有杂质，若存在则需要更换润滑油或进行进一步的故障诊断。Inspect the cleanliness and quality of the lubricating oil, observe whether the lubricating oil is turbid, contaminated, or contains impurities. If so, it is necessary to replace the

	lubricating oil or perform further fault diagnosis. 3、 检查齿轮箱的油封和密封件是否有任何油液泄露或密封件损坏、老化的现象。Inspect the oil seals and gaskets of the gearbox for any oil leaks or damages, signs of aging.
处理方法 Handling method:	1、若油量较低，则需添加同种牌号的润滑油，加油量由圆形油标显示，静止后液面至少应处于油镜中部，此为最低液位要求，齿轮箱加油量可适当偏高。加油时应增加滤网等防护，防止异物掉入，可以从齿箱上方的螺塞处注油。调整油位后要静止 20-30 分钟后再观察，检查其真实油位是否符合要求。If the oil level is low, add lubricating oil of the same brand and type. The amount of oil to be added is indicated by a circular oil mark, and the static oil level should be in the middle of the sight glass. This is the minimum oil level requirement. The oil level in the gearbox can be slightly higher. When adding oil, precautions such as installing a filter or protective mesh should be taken to prevent foreign objects from falling in. Oil can be injected through the plug con top of the gearbox. After adjusting the oil level, allow it to stand still for 20-30 minutes before observing and checking if the actual oil level meets the requirements. 2、若润滑油浑浊、污染或含有杂质，则需更换同种牌号的润滑油。If the lubricating oil is turbid, contaminated, or contains impurities, it needs to be replaced with the same brand and type of lubricating oil. 3、检查齿轮箱的油封和密封件，确保其完好无损，如有磨损、老化或损坏，应及时更换以避免油液泄露。Inspect the oil seals and gaskets of the gearbox to ensure they are intact. If there is any wearing, aging, or damage, they should be replaced promptly to prevent oil leakage.

4.1.2 齿轮箱漏油 Oil leakage of gearbox

检查周期 Inspection cycle:	每季度 Every quarter
不良后果 Negative consequences:	齿轮磨损，降低齿轮寿命，运行温度升高，增加噪音和震动，齿轮箱发生故障。Gear wear reduces the lifespan of gears, increases operating temperatures, and leads to increased noise and vibration. Gearbox failure may occur as a result.

注 意 事 项 Cautions：	1、 确认升降系统已停止。 Confirm that the lifting system has stopped. 2、 当需要拆卸时，请与本公司联系，并根据他们的指示进行拆卸，或由我公司的维修工程师进行拆卸。When disassembly is required, please contact our company and follow their instructions for disassembly, or have our maintenance engineer perform the disassembly.
专 用 工 具 Special tools：	
检 查 方 法 Inspection method：	检修顺序 Sequence of Maintenance Work 1、首先确保升降系统停止，然后切断电源；Ensure that the jacking system has stopped, then disconnect the power supply. 2、使用清洁剂等对齿轮箱的外表面进行清洁，以防止污物进入齿轮箱内部；Clean the exterior surface of the gearbox using a cleaner product to prevent debris from entering the interior of the gearbox; 3、通过观察油迹、油渍、湿润的区域或油滴的位置来确定漏油的源头；Identify the source of oil leakage by observing oil stains, wet areas, or the location of oil droplets. 4、根据漏油位置拆卸相关部件；Disassemble the relevant components based on the location of the oil leakage. 5、检查已拆卸的密封件是否存在磨损、老化或损坏。如存在，则需要更换新的部件；Inspect the disassembled seals for any wear, aging, or damage. If present, new parts need to be replaced. 6、检查齿轮箱内的油槽和油管是否有污垢、杂质或堵塞物，确保润滑油的正常流动。Inspect the oil sumps and oil pipes inside the gearbox for any dirt, impurities, or blockages to ensure the smooth flow of lubricating oil. 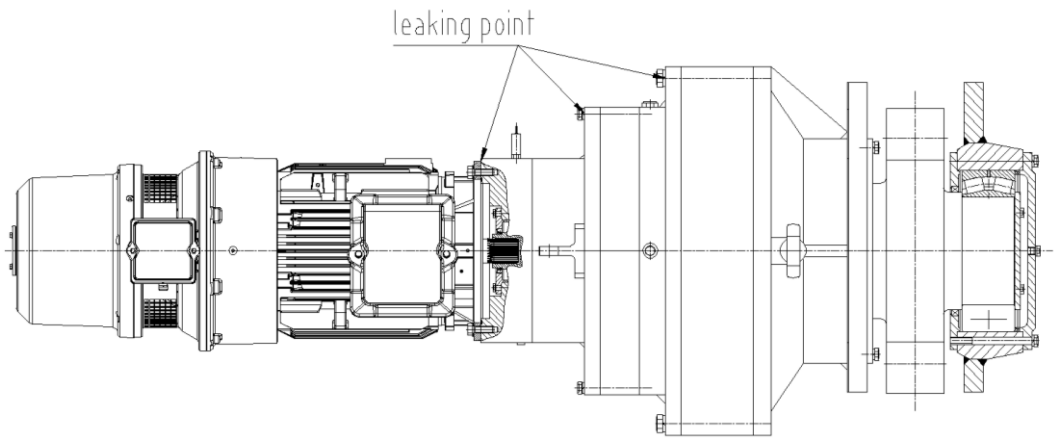

处理方法 **Handling method:**	1、如果漏油是由密封圈或油封老化、损坏或松动引起的，需要更换这些部件。更换时应选用本公司推荐的密封件，确保密封效果良好；If the oil leakage is caused by aging, damage, loosening of the sealing rings or oil seals, these components need to be replaced. When replacing them, it is recommended to use the sealing components recommended by our company to ensure effective sealing; 2、油路中存在污垢，杂质或堵塞物也可能导致润滑油泄露，需要清洁油路、更换油滤器和更换润滑油；The presence of dirt, impurities, or blockages in the oil passages can also lead to lubricating oil leakage. It is necessary to clean the oil passages, replace the oil filter, and change the lubricating oil; 3、检查齿轮箱的密封性是否良好，如有必要进行修复或更换。确保齿轮箱内流量和压力正常，并且不会漏到机器的其他部位；Inspect the sealing integrity of the gearbox and, if necessary, repair or replace it to ensure proper flow and pressure within the gearbox and prevent leakage into other parts of the machine; 4、如果齿轮箱损坏严重或无法修复，需要更换整个齿轮箱，此时应联系本公司，选择合适的齿轮箱进行更换。If the gearbox is severely damaged or cannot be repaired, it is necessary to replace the entire gearbox. In such cases, please contact our company to select an appropriate gearbox for replacement.

4.1.3 更换齿轮箱润滑油 Renew lubricant of gearbox

检查周期 **Inspection cycle:**	After each voyage or every six months of operation
不良后果 **Negative consequences:**	润滑效果下降，噪音变大，能效降低，寿命缩短。Decreased lubrication effectiveness, increased noise, reduced energy efficiency, and shortened lifespan.
注意事项 **Cautions:**	1、每次航行或者每运行半年后检查润滑油颜色和纯度。如更换润滑油，润滑油样本应提供给生产商检验和咨询，油位每个季度需要检查。Check oil’s color and fineness in every sailing or three months. Sample oil to oil manufacture to check and enquire if the oil is renewed. 2、确保电动升降系统处于停止状态。Confirm that the Hydraulic jacking system is stopped.

	3、提供的润滑油品牌与更换的润滑油品牌一样。Lubricant oil supplied is the same brand as the oil drained.
专用工具 Special tools：	
检查方法 Inspection method：	检修顺序 Sequence of Maintenance Work 1、打开放油塞。Loosen the drain plug. 2、放大约 1L 润滑油作为样本，然后转交给润滑油生产商测试，根据测试结果，如果油品质较低，放干润滑油并更换。Drain lubricant oil about 1L as sample and then deliver it to oil manufacture to test. According to the result, if the oil is debased, drain oil and renew oil. 3、跟换新润滑油之前，通过检查孔检查齿轮箱内部，如果齿轮箱内壁锈蚀，应涂防锈漆。Before supply fresh oil, test gearbox inner through access hole. And if gearbox inwall is rust-eaten, anticorrosion paint should be painted. 4、拧紧放油塞。Screw the drain plug tightly. 5、供油直到达到4.1.1 中要求。Supply oil until the requirements in 4.1.1 are met. 6、根据如下项目，确定更换润滑油时间。According to the following items, decide to the time renewing oil.

项目Items	单位Unit	低行动值（换油）Low Action Value(Oil Change)	低警戒值Low Warning Value	高警戒值 High Warning Value	高行动值（换油）High Action Value(Oil Change)
粘度 Viscosity（40℃）	Cst	-20%	-15%	+15%	+20%
水分 Moisture content	Ppm			500	1000
酸值Acid value	MgKOH/g			1.5	2.0
清洁度 Cleanliness				19/16	20/17

处理方法 Handling method:	1、关停升降系统，准备工具和设备，选择相同牌号的润滑油；Shut down the jacking system, prepare tools and equipment, and select lubricating oil of the same grade. 2、找到齿轮箱上的排油螺塞或油底壳上的排油孔，打开它们以排出旧的润滑油；Locate the oil drain plug on the gearbox or the oil drain hole on the oil sump, and open them to drain out the old lubricating oil. 3、在安全的情况下，使用适当的清洁剂清洁齿轮箱内部，以去除残留的油污和杂质。确保在清洁过程中不会损坏齿轮箱的密封件或其他部件；In a safe manner, use an appropriate cleaning agent to clean the interior of the gearbox, removing any remaining oil residues and impurities. Ensure that during the cleaning process, the sealing components and other parts of the gearbox are not damaged. 4、使用本公司要求或规范的润滑油，并将其注入齿轮箱中，在注入之后检查润滑油的水平是否在正常范围内；Use the lubricating oil required or specified by our company and inject it into the gearbox. After injection, check if the oil level is within the normal range. 5、确保排油孔或排油螺栓是否已经关闭，并检查密封件。Ensure that the oil drain hole or oil drain plug is closed and inspect the seals.

4.1.4 检查螺栓是否松动 Check loose bolt

检查周期 Inspection cycle:	Every sailing
不良后果 Negative consequences:	产生噪音，油封泄露，机器损坏，造成安全隐患。Causes noise, oil seal leakage, machine damage, and poses a safety hazard.
注意事项 Cautions:	每航行一次都要检查螺栓是否松动 Check whether the bolts is loose or not in every sailing.
专用工具 Special tools:	
检查方法	检修顺序 Sequence of Maintenance Work

Inspection method:	1、检查楔形锁紧组件螺栓M12是否松动；Check whether the bolts M12 of wedge-shaped locking parts are loose or not. 2、检查电机与齿轮箱安装螺栓是否松动；Check whether the installation bolts between the motor and gearbox are loose or not. 3、检查齿轮箱方形法兰锁紧螺栓M36是否松动；Check if the square flange locking bolts M36 on the gearbox are loose or not. 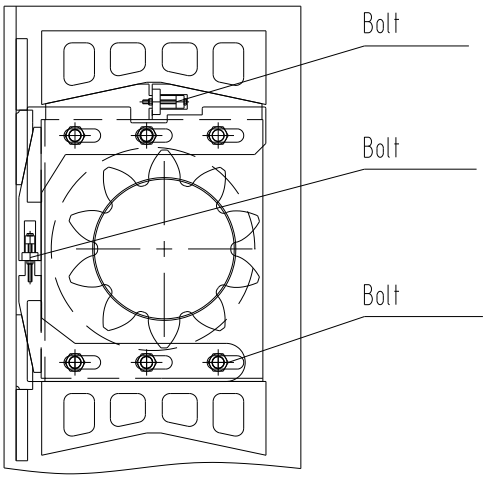
处 理 方 法 **Handling method:**	1、关停升降系统，准备工具和设备；Shut down the jacking system and prepare tools and equipment. 2、如楔形锁紧组件螺栓 M12 螺栓松动，需使用力矩扳手按附表力矩拧紧，并检查配合面间隙；If the bolts M12 of wedge-shaped locking parts are loose, use a torque wrench to tightening them according to the torque values specified in the attached table. Also, check the clearance between mating surfaces. 3、如电机与齿轮箱连接螺栓松动，需使用力矩扳手按附表力矩拧紧；If the installation bolts between the motor and gearbox are loose, use a torque wrench to tightening them according to the torque values specified in the attached table. 4、如齿轮箱方形法兰锁紧螺栓 M36 松动，需使用力矩扳手按附表力矩拧紧；If the square flange locking bolts M36 on the gearbox are loose, use a torque wrench to tightening them according to the torque values specified in the attached table. 5、如螺栓已经损坏，无法正常紧固或存在明显缺陷，需选择与原螺栓相同规格和材质的螺栓进行替换。If the bolt is damaged and cannot be properly fastened or shows obvious defects, it is necessary to replace it with a bolt of the same specification and material as the original one.

4.1.5 齿条啮合齿面 Rack and pinion engagement face

检查周期 Inspection cycle：	6 个月或每次航行 After each sailing or every six months
不良后果 Negative consequences：	传动效率下降，齿轮磨损加重，崩齿和断齿，导致设备故障，停机时间增加。The decrease in transmission efficiency, increased gear wear, tooth failure, and equipment malfunctions lead to increased downtime.
注意事项 Cautions：	
专用工具 Special tools：	
检查方法 Inspection method：	检修顺序 Sequence of Maintenance Work 1、选用合适的清洗工具，将齿条啮合齿面的灰尘、油脂和其他污垢清除干净，避免其影响观察；Choose an appropriate cleaning tool to clean the dust, grease, and other dirt from the meshing tooth surfaces of the rack, ensuring that it does not obstruct observation. 2、确认齿条啮合齿面是否存在裂纹、磨损或断裂。Verify if there are cracks, wear, or fractures on the meshing tooth surfaces of the rack.
处理方法 Handling method：	若齿条啮合齿面出现损坏时，请及时与我们的维修办公室联系。If there is damage to the meshing tooth surfaces of the rack, please contact our maintenance office promptly.

4.1.6 润滑齿轮箱和齿条 Lubricate the gearbox and rack

检查周期 inspection cycle：	1 个月或每次航行 After each sailing or every month
不良后果 negative consequen	齿轮箱、齿条损坏，导致齿轮齿条啮合状态异常。The gearbox and rack damage lead to abnormal meshing of the gears and rack.

ces：	
注 意 事 项 cautions：	1、确认电动升降系统已停止。Confirm that the electric jacking system has been stopped. 2、确认供给同种牌号的润滑油。Confirm that lubricating oil of the same grade is supplied.
专 用 工 具 special tools：	润滑器 doper 毛刷 bristle brush
检 查 方 法 Inspection method：	1、观察润滑脂是否呈黑色，如果不是黑色不用采取措施；Observe whether the lubricating grease is black in color. If it is not black, no action needs to be taken. 2、如润滑脂呈黑色，采用手捻法判断润滑脂粘稠度和杂质含量，如粘稠度不够或者杂质含量较高，则进行换脂。If the lubricating grease is black, use the hand-twisting method to assess its viscosity and impurity content. If the viscosity is insufficient or the impurity content is high, it is recommended to replace the grease.
处 理 方 法 Handling method：	1、准备与本公司提供型号相同的润滑脂；Prepare the same model of lubricating grease provided by our company. 2、根据齿轮箱的设计，拧下塞子；According to the design of the gearbox, unscrew the plug. 3、清除变质的润滑脂，装好齿轮箱的后盖。Remove the deteriorated lubricating grease and install the rear cover of the gearbox. 4、使用润滑器箱齿轮箱后盖中供应润滑脂，直到润滑脂从塞孔中渗出。Use a lubricator to supply lubricating grease into the rear cover of the gearbox until the grease starts to ooze out from the plug hole. 5、在齿条齿面上涂抹润滑油。Apply lubricating oil onto the surface of the rack teeth.

4.2 机械部件检查 Inspection of mechanical parts

机械部件的健康检查和维护保养项目请参见下表：Please refer to the table below for the health check and maintenance items of mechanical components

序号 No	部套名称 Part	检查项目 Inspection	检查/更换周期	具体实施方法 Specific	备注 Remark

	name	items	Inspection/Replacement cycle	implementation method	
1	安装架 Jackcase	焊缝 Weld seam	每次升降后 After each lift	目测进行自检，出现问题后联系售后工程师 Visual self-inspection is sufficient, and contact the after-sales engineer in case of any issue	
2	楔块 Wedge	配合面间隙 Clearance between mating surfaces	每 6 月 Every 6 months	自检，详见 4.2.1 节 Self-inspection, see Section 4.2.1 for details	
3	齿条 Rack	齿条表面全面检查并修复 Comprehensive inspection and repair of the surface of the rack	每 36 月 Every 36 months	联系售后工程师 Contact the after-sales engineer	齿条齿厚磨损量超过 5mm 后需技术确认后方可升降平台 After the wear thickness of the rack exceeds 5mm, the lifting platform can only be operated after technical confirmation

此部分维修保养内容请联系供方售后工程师，此处仅针对部分项目内容进行说明。Please contact the supplier's after-sales engineer for maintenance and repair information in this section. The following explanation only covers certain aspects of the project.

4.2.1 楔块贴合检查及处理 Inspection and handling of wedge block fitment

检查周期 Inspection cycle：	每 6 月 Every 6 months
不良后果 Negative consequences：	齿轮箱松动 Loose gearbox
注意事项 Cautions：	1、拆卸齿轮箱前，必须通过吊葫芦支撑齿轮箱。Before disassembling the gearbox, it is necessary to support the gearbox with a hoist. 2、拂配合格后，按附表规定扭矩紧固每一件螺栓。After proper fitment, tighten each bolt to the specified torque as per the attached table.
专用工具 Special tools：	塞尺 Plug gauge
检查方法 Inspection method：	检修顺序 Sequence of Maintenance Work 1.确认配合面的间隙是否合格；Confirm whether gap length between the matching surface is eligible or not. 2.按附表1的要求拆卸齿轮箱，并对配合面进行拂配，直至合格。Disassemble gearbox according to the requirements seeing attached table 1, and cooperate with producing to make mating surface acceptable. 安装架扭矩板面涂蓝丹，检查如下项目：Wipe the common frankincense over the K type plate incline plane of mounting bracket. Check items as follow: ➢ 塞尺检查间隙不大于 0.1mm; The gap is less than 0.1mm check by feeler; ➢ 楔块与扭矩板配合面的接触面积不少于 70%。The incline plane interface area of wedge-shaped locking parts is not less than 70%.

	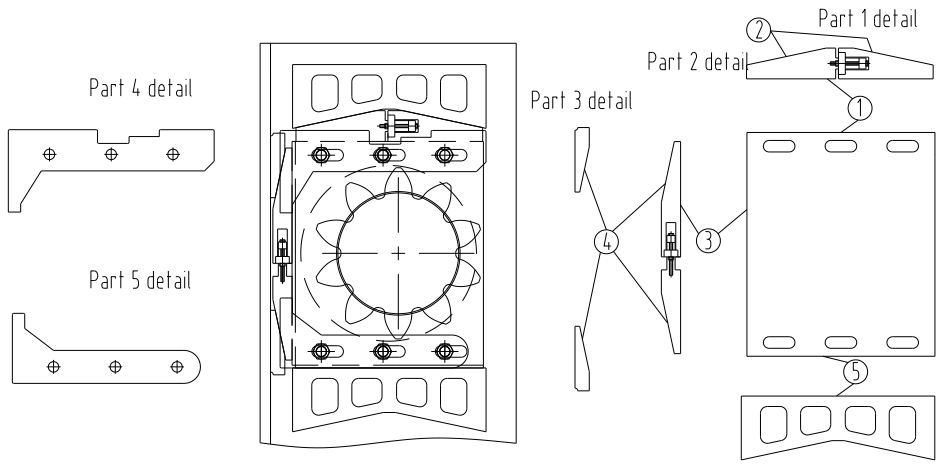 注：①~⑤为配合面 Note：①~⑤ is the conjugate surface 如不满足上述两项要求⑤，修配（修磨）楔块配合面。 满足要求后用螺栓锁紧楔块压板。If the upside two requirements are not met, repair the fitting surface of wedge-shaped locking parts. After the requirements are met, use the bolts tighten the wedge-shaped locking parts.
处理方法 Handling method：	1.按附录 1 的要求拆卸齿轮箱，并对配合面进行拂配，直至合格。Disassemble the gearbox according to the requirements in Appendix 1 and perform fitting on mating surfaces until they meet the specified criteria. 2.检查①~⑤配合面间隙是否合格。Check if the clearance of mating surfaces ①~⑤ is within the specified limits.

4.2.2 啮合齿磨损量检查及修复 Inspection and repair of wear on meshing teeth

检查周期 Inspection cycle：	每 36 月 every 36 months
不良后果 Negative consequences：	齿条的齿根弯曲强度不够，导致齿发生塑性变形或者断裂。Insufficient bending strength of the tooth root of the rack leads to plastic deformation or fracture of the teeth.
注意事项 Cautions：	1. 齿条磨损极限为 5mm；The maximum allowable wear for the rack is 5mm 2. 测量后请及时对清理干净的齿面采取保护措施。After measurement, please promptly take protective measures on the cleaned tooth surface.

专用工具 **Special tools：**	齿条样板、游标卡尺 rack template、 vernier caliper 齿条卡板详图（厚度 10mm 即可）：Detailed diagram of the rack clamp plate(thickness of 10mm is sufficient) 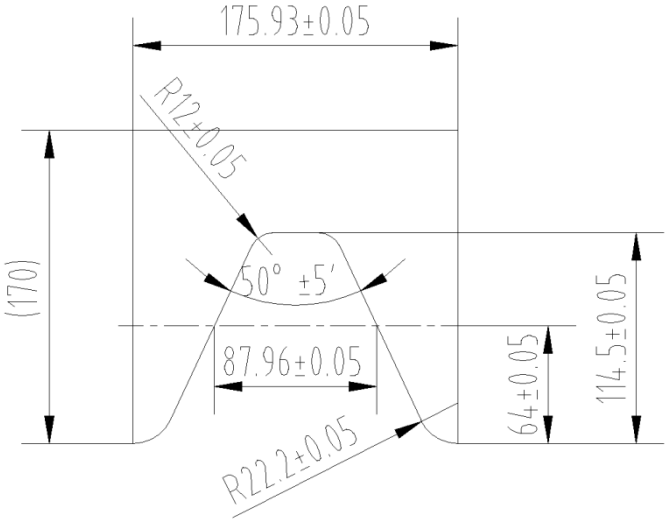
检查方法 **Inspection method：**	1. 在升降平台经常用到的齿条啮合段选取 3 段连续 10 齿，把齿面的润滑脂等杂物清理干净；Select three consecutive segments of 10 teeth in the rack commonly used in the lifting platform and clean the tooth surfaces from any grease or debris. **方法一：采用齿条卡板 Method 1 : Utilizing a rack clamp plate** 2. 使齿条卡板卡住单个齿，齿条卡板凹口的顶边和一侧边靠紧该齿；Secure the rack clamp plate onto a single tooth, with the top edge and one side edge of the rack clamp plate tightly against that tooth. 3. 使用游标卡尺测量卡板另一侧边标线处与齿条齿的间隙值，该值即为齿厚磨损量。Measure the gap between the marking line on the other side edge of the rack clamp plate and the teeth of the rack using a vernier caliper. This value represents the wear thickness of the teeth.

	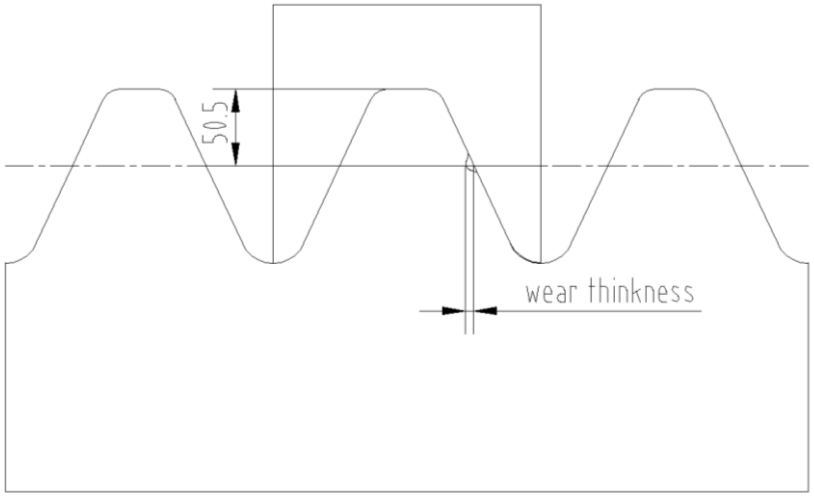 **方法二：画线测量法 Method 2: Line measurement method** 2. 从齿顶往下 50.5mm 画齿顶平行线，使用游标卡尺测量线段长度；Draw a parallel line to the tooth top at a distance of 50.5 mm downwards. Measure the length of the line segment using a vernier caliper. 3. 计算测量值与 87.96mm 的差值 Calculate the difference between the measured value and 87.96mm.
处理方法 Handling method：	**处理措施 1：Remedial measure 1** 如果达到磨损极限的齿不连续，且不集中，需要通过售后上报给供方技术，由供方技术给出具体处理方案。If the worn teeth reaching the limit are not continuous and not concentrated, it is necessary to report to the supplier's technical support through after-sales service for the specific handling plan to be provided by the supplier's technical team. **处理措施 2：Remedial measure 2** 如果达到磨损极限的齿比较连续、集中，建议采用更换齿条段的方法处理，请联系售后人员。If the worn teeth reaching the limit are relatively continuous and concentrated, it is recommended to replace the rack segments. Please contact the after-sales personnel for assistance.

4.3 液压易损、消耗件检查 Hydraulic wear and tear、consumable parts inspection

液压易损、消耗件可由用户指派有资质的组织、人员进行检查和更换，也可联系供方售后工程师。Hydraulic wear and tear、consumable can be assigned by

qualified organizations or personnel for inspection and replacement, or contact the after-sales engineer of the supplier.

序号 No	部套名称 Part name	检查项目 Inspection items	检查/更换周期 Inspection/Replacement cycle	具体实施方法 Specific implementation method	备注 Remark
	过滤器、空气滤清器 Filter、air filter	检查滤芯 Check filter element	每 1 月 Every month	目视检查 Visual inspection	
	压力表 Pressure guage	检验周期 Inspection cycle	每 12 月 Every 12 months	定期检验 Regular check	
	高压软管 High-pressure hose	是否老化 Is it aging?	每 24 月 Every 24 months	目视检查 Visual inspection	
	液压元件 Hydraulic components	功能故障 Functional failure	每 24 月 Every 24 months	外部设备性能测试 External device performance testing	根据使用工况，规定对泵、阀等元件进行性能测试。Conduct performance testing on pumps, values and other components based on operating conditions and requlations

4.4 电气元器件检查 Electrical component inspection

4.4.1 电气符号说明 Electrical symbol specification

	电线永久联接 Wire permanent connection		电线交叉，没有联接 The wires are crossed and not connected

	断路器主触点 Circuit breaker main contact		接触器或中继线圈 Contactor or trunk coil
	接触器或中继常开触点 Contactor or relay normally open contact		接触器或中继常闭触点Contactor or relay normally closed contact
	弹簧自动复位按钮的常开触点 Normally open contact of the spring automatic reset button		弹簧自动复位按钮的常闭触点 Normally closed contact of the spring automatic reset button
	2档选择开关的常开触点 2 gear select the normally open contact of the switch		蘑菇头旋转复位急停按钮的常闭触点 Mushroom head rotary reset emergency stop button normally closed contact
	指示灯lamp		接线端子 amphenol connector
		A	电流表ammeter

4.4.2 电器设备通用保养要求 General maintenance requirements for electrical equipment

电器设备通用保养要求主要分为电器设备功能检查、安装检查、连接电缆的检查、柜内设备检查等。

General maintenance requirements for electrical equipment are mainly divided into functional inspection of electrical equipment, installation inspection, inspection of connecting cables, inspection of equipment in the cabinet, etc.

1. 电器设备功能检查 Functional check of electrical equipment

电器设备需要定期对仪表显示、传感器开关等进行检查保养，如果功能出现异常，应进行维修或者更换。

The electrical equipment needs to be regularly checked and maintained on the instrument display, sensor switch, etc. If the function is abnormal, it should be repaired or replaced.

序号 NO.	检查内容 Examination content	检查周期 searchcycle	检查方法 Check method	判断标准 standard
	集中控制台和机旁控制箱指示灯是否正常 Centralized console and side control box indicator light is normal	每周 Weekly	通电后，按下“试灯/消音”按钮 After power on, press the "Test light/Silence" button	所有指示灯和蜂鸣器点亮为合格 All indicators and buzzers are lit to pass
	急停 EMERGENCY STOP	每月 month	手动 manual operation	拍下急停后泵站起动器、电磁制动器、变频器失电 After the snap stop, the pump station starter,electromagnetic brake and frequency converter lose power
	电磁制动器 electromagnetic brake	每月 month	通电 power on	在机旁逐个操作，看电磁制动器能否正常打开 Operate at the side of the machine one by one to see whether the electromagnetic brake can open normally

2. 电器安装螺栓的检查 Check electrical installation bolts

对于电器设备的安装螺栓，尤其是活动件的安装螺栓，应定期检查安装螺栓是否紧固，如果螺栓松动，应紧固。

For the installation bolts of electrical equipment, especially the installation bolts of movable parts, the installation bolts should be regularly checked whether they are tight, and if the bolts are loose, they should be tightened.

序号 NO.	检查内容 examination content	检查周期 search cycle	检查方法 Check method	判断标准 standard
1	控制柜体安装螺栓 Control cabinet mounting bolts	每月 month	目测、晃动 Look, shake	目测螺栓和垫圈间无间隙同时螺栓露出 3~5 道牙、晃动电器设备无松动为合格 Visually check that there is no gap between the bolt and the washer, while the bolt is exposed to 3 to 5 teeth, and the shaking electrical equipment is not loose.
2	桩腿接线盒安装螺栓 Leg junction box mounting bolt	每月 month		

3. 电缆连接的检查 Check cable connections

对于活动处和振动较大处的电缆连接，建议定期检查电缆是否损伤，如有损伤，应更换；检查各部套之间的电缆连接是否牢固，如有松动，应紧固。

For the cable connection at the active place and the place with large vibration, it is recommended to check regularly whether the cable is damaged. If there is damage, replace it. Check whether the cable connection between the parts is firm, if loose, should be tightened.

序号 NO.	检查内容 examination content	检查周期 search cycle	检查方法 Check method	判断标准 standard
1	接近开关电缆检查 Approach the switch cable to check	每月 month	用手拉动电缆与接线端子连接处 Pull the cable to the terminal by hand	电缆没有松动为合格 The cable is qualified if it is not loosened
2	传感器电缆检查 Sensor cable inspection	每月 month		

4. 电器柜内设备的检查 Check the equipment in the electrical cabinet

对于电器柜内设备，主要检查柜内是否清洁、活动件是否松动、端子是否有烧糊现象。

For the equipment in the electrical cabinet, mainly check whether the cabinet is clean, whether the movable parts are loose, and whether the terminals are burned.

序号 NO.	检查内容 examination content	检查周期 search cycle	检查方法 Check method	判断标准 standard
1	各电器柜内清洁检查 Check the cleaning inside each electrical cabinet	每月 month	清洁的棉布 Clean cotton cloth	清洁后棉布上无灰尘 There is no dust on the cotton cloth after cleaning
2	接线盒密封检查 Junction box seal check	每月 month	冲水试验 flush testing	冲水后盒内没有进水为合格 It is qualified if there is no water in the box after flushing

5. 设备状态的检查 Check the device status

定期对整个系统的状态进行检查。

Periodically check the status of the entire system.

序号 NO.	检查内容 examination content	检查周期 search cycle	检查方法 Check method	判断标准 standard
1	柜内 PLC 指示灯 Cabinet PLC indicator light	每月 month	到柜内用肉眼观察各指示灯状态 Go to the cabinet and observe the status of each indicator light with naked eyes	对照 4.4.4 章节的指示灯状态，状态为正常运行为合格 According to the indicator status in section 4.4.4, the status is normal operation or qualified
2	绝对值编码器 absolute encoder	每月 month	在触摸屏观察各桩腿位移，是否与桩腿刻度一致 On the touch screen, observe whether the displacement of each pile leg	桩腿伸出平台高度与桩腿刻度一致为合格 The height of the pile leg protruding from the platform is consistent with the scale of the pile leg

			is consistent with the scale of the pile leg	
3	电子水平仪 electronic level meter	每月 month	在触摸屏处观察倾斜角度 Observe the tilt Angle at the touch screen	电子水平仪角度与气泡水平仪倾斜角度对比，相差不大为合格 The difference between the Angle of electronic level and the tilt Angle of bubble level is not much qualified

4.4.3 PLC 模块的检查与更换 Check and replace PLC module

1）PLC 介绍 introduce

- PLC 介绍 introduce

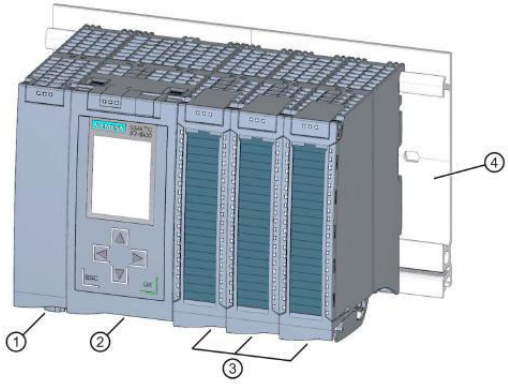

① 系统电源
② CPU
③ I/O 模块
④ 带有集成 DIN 导轨的安装导轨

- CPU 介绍 introduce

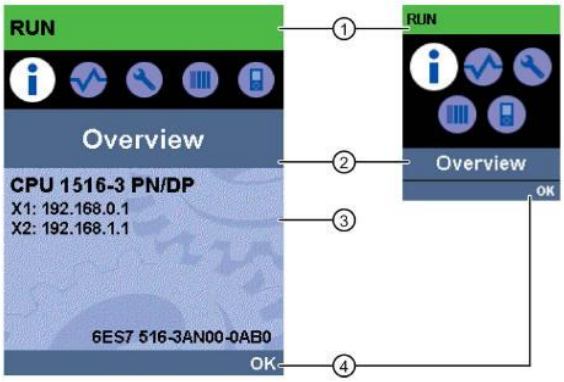

① CPU 状态信息
② 菜单名称
③ 数据显示域
④ 导航帮助，例如，OK/ESC 或页码

- CPU 的状态信息 status messages

状态数据的颜色和图标	含义
绿色	RUN
橙色	• STOP • STOP - 固件更新
红色	FAULT
白色	• 在 CPU 和显示屏之间建立连接
	组态的保护等级
	• CPU 中至少激活了一个中断。 • CPU 中未插入 SIMATIC 存储卡。 • 受专有技术保护的块的序列号与 CPU 或 SIMATIC 存储卡的序列号不匹配。 • 未加载用户程序
	在 CPU 中激活了强制作业
	激活了具有 F 功能的安全操作（适用于故障安全 CPU）禁用了安全模式后，该符号显示为灰色。
	故障安全 CPU（适用于故障安全 CPU）

- CPU 显示屏的状态菜单 The status menu of the display

图标	含义
	可编辑的菜单项
	在此选择所需语言。
	下一个较低级别的对象中存在报警。
	下一个较低级别的对象中存在故障。
	无法访问标记的模块。
	导航到下一子级
	在编辑模式中，可使用两个箭头键进行选择： • 向下/向上： 跳至某个选择，或用于选择指定的数字/选项
	在编辑模式中，可使用四个箭头键进行选择： • 向下/向上： 跳至某个选择，或用于选择指定的数字 • 向左/向右： 向前或向后跳过一个选择点

- CPU 菜单名 MenuName

主菜单项	含义	描述
	概述	“概览”(Overview) 菜单包含有关 CPU 和插入的 SIMATIC 存储卡属性的信息以及有关是否有专有技术保护或是否链接有序列号的信息。 对于 F-CPU，将会显示安全模式的状态、集体签名以及 F-CPU 中的最后更改日期。
	诊断	“诊断”(Diagnostics) 菜单包括： • 诊断报警的显示 • 对强制表的读/写访问以及对监控表的读访问 • 循环时间的显示 • CPU 存储器利用率的显示 • 中断的显示
	设置	在“设置”(Settings) 菜单中，用户可以： • 分配 CPU 的 IP 地址和 PROFINET 设备名称 • 每个 CPU 接口的网络属性 • 设置日期、时间、时区、运行状态 (RUN/STOP) 和保护等级 • 使用显示密码禁用/启用显示 • 执行 CPU 存储器复位 • 复位至出厂设置 • 查看固件更新状态。
	模块	“模块”(Modules) 菜单包含有关组态中使用的集中式和分布式模块的信息。 外围部署的模块可通过 PROFINET 和/或 PROFIBUS 连接到 CPU。 可在此设置 CPU 或 CP/CM 的 IP 地址。 将显示 F 模块的故障安全参数。
	显示屏	在“显示”(Display) 菜单中，可组态显示屏的相关设置，例如，语言设置、亮度和省电模式。 省电模式将使显示屏变暗。 待机模式选择器将显示屏关闭。

- CPU 面板介绍 Panel introduction

控制键

CPU 的显示屏上包含以下几个按键：

- 四个箭头按钮：“上”、“下”、“左”、“右”
  按住箭头按钮超过两秒时，鼠标光标会自动滚动
- 一个 ESC 键
- 一个 OK 键

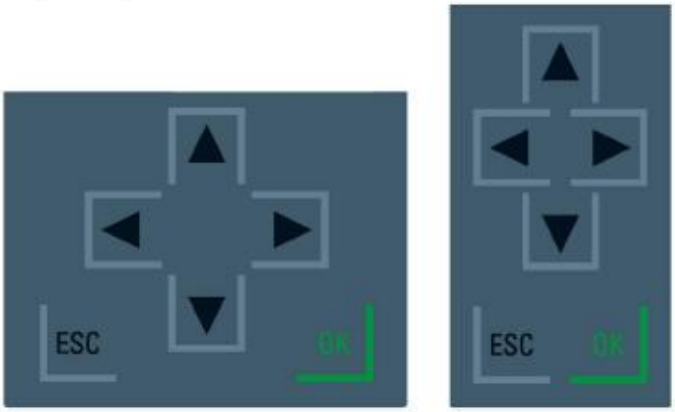

图 12-3 控制键

说明

如果显示屏处于省电模式或待机模式，则可通过按任何键退出此模式。

“确定”(OK)和“ESC”(ESC)键的功能

- 在可输入信息的菜单命令中：
  - OK → 用于访问菜单命令、确认输入以及退出编辑模式
  - ESC → 设置原始内容（即不保存更改）和退出编辑模式
- 在不可输入信息的菜单命令中：
  - OK → 进入下一个子菜单命令
  - ESC → 回到前一个菜单命令

在显示屏的任意屏幕上按住 ESC 大约三秒，可自动跳到主页面。

2）IO 模块的检查与更换 Check and replace I/O modules

- IO 模块的检查：IO module check:

若 PLC 某输出模块的输出指示灯亮，但经测量此点的输出没有 DC24V，那么该点输出故障，需要更换模块。

If the output indicator of a PLC output module is on, but the output of the measured point does not have DC24V, then the output of the point is faulty and the module needs to be replaced.

- IO 模块的更换：IO module replacement:

简介

先将前连接器插入到 I/O 模块中，编码元件的一部分会插在前连接器中。 将 I/O 更换为同类型的模块时，正确的编码元件已存在于前连接器中。

操作步骤

要更换 I/O 模块，请按以下步骤操作：

已卸下 I/O 模块。

1. 使用新 I/O 模块时，通过螺丝刀将前连接器中的那一半编码元件撬出。

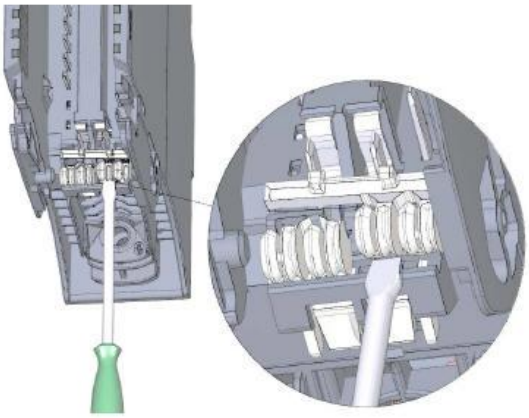

图 13-3 将编码元件从 I/O 模块撬出

2. 将现有的前连接器插到新 I/O 模块中（相同模块类型），直至听到锁定就位的声音。

- IO 模块上前连接器的更换：Replace the front connector of the IO module:

简介

先将前连接器插入到 I/O 模块中，编码元件的一部分会插在前连接器中。 使用新的连接器替换有故障的前连接器时，必须将编码元件转移到新的前连接器上。

操作步骤

已将前连接器从模块上卸下并松开接线。 如果将前连接器用于模拟量模块，则还需要卸下电源元件和屏蔽元件。 要更换前连接器，请按以下步骤操作：

1. 小心地从前连接器卸下编码元件。 请务必小心，不要损坏编码元件。

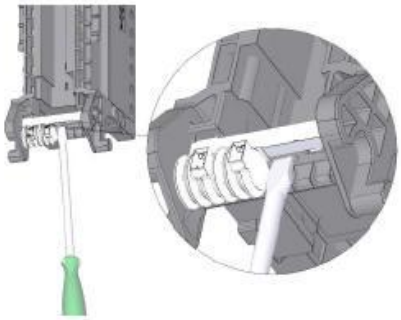

图 13-4 从前连接器中卸下编码元件

2. 将卸下的编码元件插入新的前连接器中。

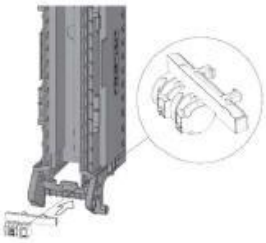

图 13-5 将编码元件插入前连接器

3. 将新前连接器插入现有 I/O 模块，直至听到锁定就位的声音。
4. 接线新的前连接器。

4.4.4 CPU 指示灯 Lamp

下图显示了 CPU 1513-1 PN 的 LED 指示灯。

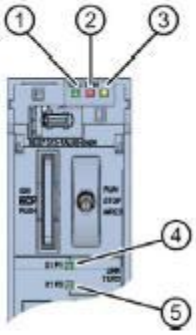

① RUN/STOP LED 指示灯（LED 指示灯黄色/绿色点亮）
② ERROR LED 指示灯（LED 指示灯红色点亮）
③ MAINT LED 指示灯（LED 指示灯黄色点亮）
④ 端口 X1 P1 的 LINK RX/TX LED 指示灯（LED 指示灯黄色/绿色点亮）
⑤ 端口 X1 P2 的 LINK RX/TX LED 指示灯（LED 指示灯黄色/绿色点亮）

RUN/STOP、ERROR 和 MAINT LED 指示灯的含义

CPU 1513-1 PN 上配有三个 LED 指示灯，用于指示当前的操作状态和诊断状态。下表列出了 RUN/STOP、ERROR 和 MAINT LED 指示灯各种颜色组合的含义。

RUN/STOP LED 指示灯	ERROR LED 指示灯	MAINT LED 指示灯	含义
LED 指示灯熄灭	LED 指示灯熄灭	LED 指示灯熄灭	CPU 电源缺失或不足。
LED 指示灯熄灭	LED 指示灯红色闪烁	LED 指示灯熄灭	发生错误。
LED 指示灯绿色点亮	LED 指示灯熄灭	LED 指示灯熄灭	CPU 处于 RUN 模式。
LED 指示灯绿色点亮	LED 指示灯红色闪烁	LED 指示灯熄灭	诊断事件未决。
LED 指示灯绿色点亮	LED 指示灯熄灭	LED 指示灯黄色点亮	设备要求维护。 必须在短时间内检查/更换受影响的硬件。
			激活强制作业
			PROFIenergy 暂停
LED 指示灯绿色点亮	LED 指示灯熄灭	LED 指示灯黄色闪烁	设备需要维护。 必须在短时间内检查/更换受影响的硬件。
			组态错误
LED 指示灯黄色点亮	LED 指示灯熄灭	LED 指示灯黄色闪烁	固件更新已成功完成。
LED 指示灯黄色点亮	LED 指示灯熄灭	LED 指示灯熄灭	CPU 处于 STOP 模式。

RUN/STOP LED 指示灯	ERROR LED 指示灯	MAINT LED 指示灯	含义
LED 指示灯黄色点亮	LED 指示灯红色闪烁	LED 指示灯黄色闪烁	SIMATIC 存储卡中的程序出错。
			CPU 故障
LED 指示灯黄色闪烁	LED 指示灯熄灭	LED 指示灯熄灭	CPU 在 STOP 模式下执行内部活动，如 STOP 之后启动。
			从 SIMATIC 存储卡下载用户程序
LED 指示灯黄色/绿色闪烁	LED 指示灯熄灭	LED 指示灯熄灭	启动（从 RUN 转为 STOP）
LED 指示灯黄色/绿色闪烁	LED 指示灯红色闪烁	LED 指示灯黄色闪烁	启动（CPU 正在启动）
			启动、插入模块时测试 LED 指示灯。
			LED 指示灯闪烁测试

LINK RX/TX LED 指示灯的含义

每个端口都有 LINK RX/TX-LED。下表列出了 CPU 1513-1 PN 端口各“LED 指示灯的含义”。

LINK TX/RX LED 指示灯	含义
LED 指示灯熄灭	PROFINET 设备的 PROFINET 接口与通信伙伴之间没有以太网连接。 当前未通过 PROFINET 接口收发任何数据。 无 LINK 连接。
LED 指示灯绿色闪烁	正在执行“LED 指示灯闪烁测试”。
LED 指示灯绿色点亮	PROFINET 设备的 PROFINET 接口与通信伙伴之间进行以太网连接。
LED 指示灯黄色闪烁	当前正在通过 PROFINET 设备的 PROFINET 接口向以太网上的通信伙伴发送/接收数据。

4.4.5 绝对值编码器指示灯 Absolute value encoder lamp

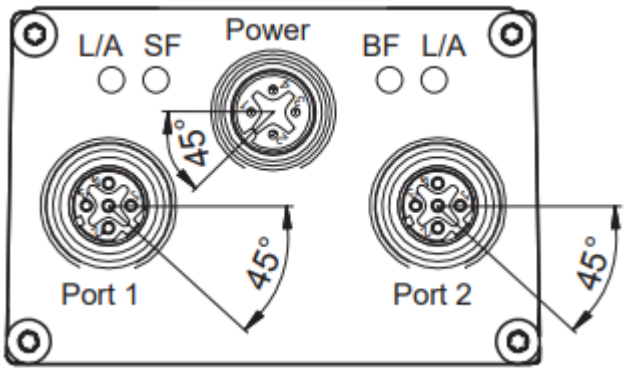

管脚	插头M12×1,5 pin,A-coded	插头M12×1,4pin,D-coded
1	+24 V	Rx+
2	+24 V	Tx+
3	0 V	Rx-
4	0 V	Tx-
5	PE	
	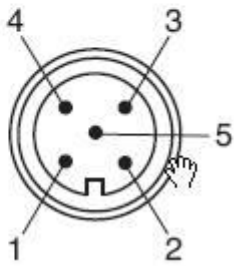	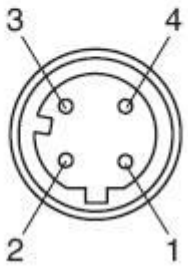

序号	指示灯名称	备注
1	L/A	通讯状态
2	SF	系统故障
3	BF	总线故障

4.5 润滑专项检查 Lubrication Special Inspection

润滑油的检查及更换见下表：Lubricating oil inspection and replacement see the following table:

序号 No	润滑部位 Lubrication part	检查/更换周期 Inspection/Replacement cycle	具体实施方法 Specific implementation method	备注 Remark
1.	齿条哈合面润滑脂 Rack gear surface lubricating grease	每 1 月 Every month	目视检查 Visual inspection	有无明显划痕、拉伤及裂纹 Is there any obvious scratch, strain or crack?
2.	齿轮箱油位检查 Gearbox oil level check	每 1 月 Every month	齿轮箱油位、是否漏油 Gearbox oil level, is there any oil leakage?	目视检查 Visual inspection
3.	齿轮箱润滑油质量检查 Gearbox lubricating oil quality inspection	每 6 月 Every six months	润滑油及润滑脂状态 Condition of lubricating oil and grease	专业机构检测，满足维护手册对齿轮箱油液的要求 Specialized organization testing, meets maintenance manual requirements for gearbox fluid
4.	齿轮箱轴承润滑脂检查	每 1 月 Every month	目测检查 Visual inspection	

	Gearbox bearing grease inspection			
5.	润滑泵站液位及是否漏油 Lubricating pump station fluid level and oil leakage check	每 1 月 Every month	目测检查 Visual inspection	
6.	行程传感器轴承润滑脂检查 Travel sensor bearing grease inspection	每 6 月 Every six months	目测检查 Visual inspection	

系统各处润滑油脂及液压油规格信息表如下：The specifications and dosage information of lubricating grease and hydraulic oil in various parts of the system are shown in the following table:

各处润滑油规格及用量

Lubricating grease specifications and dosage for various parts

用途 Purpose	油种类 Oil type	用量 Dosage
闭式齿轮箱润滑油 Closed gearbox lubricating oil	齿轮箱内部使用润滑油：ISOVG220、320 Gearbox internal use lubricating oil: ISOVG220、320 耐压润滑油；Pressure-resistant lubricating oil; 若换用其他润滑剂，请润滑剂供应商提供详细参数并经齿轮箱生产厂家认可方可使用。If a single gearbox is replaced with other lubricants, please provide detailed parameters to the lubricant supplier and obtain approval from the gearbox manufacturer before using it. 注：润滑油须具有挤压添加剂，在零下	单台齿轮箱的润滑油注油量约为 45L The lubricating oil filling volume of a single gearbox is approximately 45L.

	10 摄氏度具有流动性的合成齿轮润滑油；润滑脂须有低温及挤压抗磨性能。Note: The lubricating oil must have extrusion additives, synthetic gear lubricating oil with fluidity at minus 10 degrees Celsius; The lubricating grease must have low temperature and extrusion wear resistance.	
齿轮齿条润滑油 Gear rack lubricating oil	Mobilith SHC 1000 Special(春夏秋天 spring, summer and autumn) Mobil Dynagear 600 SL(冬天winter) 以上两种可直接混合使用，更换时不用单独清理 The above two can be directly mined and used, and no separate cleaning of bearings	
轴承（后座调心滚子轴承）及联接用润滑脂 Bearing(rear seat pivoting roller bearing)and connecting lubricating grease	Mobilth SHC 460 润滑脂 Lubricating grease	用量约为 2.5L。Dosage is about 2.5L

此部分可由用户指派有资质的组织、人员进行检查和更换，也可联系供方售后工程师。本部分对各检查项目进行说明。This section can be assigned by qualified organizations or personnel for inspection and replacement, or contact the after-sales engineer of the supplier. This section describes the inspection items.

4.5.1 齿条润滑脂检查及更换 Gear rack grease inspection and replacement

检查周期：Inspection cycle	每 1 月 Every month

不良后果：Negative consequences	升降异响、升降系统寿命缩短 Abnormal lifting sound, shortened lifespan of jacking system
注意事项：Cautions	1.本项目为自动润滑，动机前请确保润滑泵站油箱有充足的润滑脂。This project is automatic lubrication, please ensure that the lubrication pump station oil tank has sufficient grease before starting the engine. 2.如齿面粘有杂质或腐蚀严重，则应清除后进行润滑。If the gear surface is contaminated with impurities or severe corrosion, it should be cleaned before lubrication.
专用工具：Special tools:	喷射阀 Injection value
检查方法:Inspection method	1. 观察润滑脂是否呈黑色，如果不是黑色不用采取措施；Observe whether the grease is black, if not, no action is required; 2. 如润滑脂呈黑色，采用手捻法判断润滑脂粘稠度和杂质含量，如粘稠度不够或者杂质含量较高，则进行换脂。If the grease is black, use the hand kneading method to determine the consistency and impurity content of the grease. If the consistency is insufficient or the impurity content is high, replace the grease.
处理方法：Handling method	在齿条齿面上涂抹润滑油（润滑脂型号参见**错误！未找到引用源。**）。Apply lubricating oil on the tooth surface of the rack(refer to Table 5 for grease type).

4.5.2 齿轮箱轴承润滑 Gearbox bearing lubrication

检查周期：Inspection cycle	每 12 月 Every 12 months
不良后果：Negative consequences	齿轮箱轴承损坏，导致齿轮齿条啮合状态异常 Gearbox bearing damage, resulting in abnormal gear rack meshing state.
注意事项：	1、确认电动升降系统已停止。Confirm that the electric jacking system has

Cautions	stopped 2、确认供给同种牌号的润滑油（型号参见**错误！未找到引用源。**）。Confirm that the same brand of lubricating oil is supplied(see Table 5 for model).
专用工具：Special tools	滑脂枪 Grease gun
检查方法：Inspection method	1. 打开减速箱后盖，进行观察；Open the rear cover of the reduction box and observe 2. 观察润滑脂是否呈黑色；Observe whether the lubricating grease is black 3. 如润滑脂呈黑色，采用手捻法判断润滑脂粘稠度和杂质含量，如粘稠度不够或者杂质含量较高，则进行换脂。If the lubricating grease is black, use the hand kneading method to determine the consistency and impurity content of the lubricating grease. If the consistency is not enough or the impurity content is high, then replace the grease.
处理方法：Handling method	1. 清理轴承中变质的润滑脂，装好减速箱后盖；Clean up the deteriorated lubricating grease in the bearing, and install the rear cover of the gearbox 2. 拧松螺塞，用滑脂枪给减速箱的后盖加润滑脂，直到润滑脂从螺塞孔中渗出。Unscrew the plug, use the grease gun to add lubricating grease to the rear cover of the gearbox until the lubricating grease seeps out of the plug hole 3. 拧紧螺塞。Tighten the plug

4.6 紧固专项检查 Special inspection of fastening

系统的紧固件检查项目见下表：The inspection items for fasteners of the system are shown in the following table:

序号 No	部套名称 Part name	检查项目 Inspection items	检查/更换周期 Inspection/Replacement cycle		备注 Remark
1.	电机及制动器 Motor and brake	连接螺栓是否松动 Checking whether connecting bolts are	每 12 月 Every 12 months	重新拧扭矩 Re-torquing	

		loose			
2.	楔块组件 Wedge assembly	螺栓是否松动，组件配合接触面间隙 Checking whether bolts are loose and contact surface gap between assembly fits	每 6 月 Every 6 months	目视检查，重新拧扭矩，重新塞尺测间隙 Visual inspection, re-torquing, and re-measuring clearance with feeler gauge	
3.	齿轮箱 M36 安装螺栓 Gearbox M36 mounting bolts	螺栓是否松动 Checking whether bolts are loose	每 6 月 Every 6 months	重新拧扭矩 Re-torquing	

此部分内容可由用户指派有资质的组织、人员进行检查和更换，也可联系供方售后工程师。This section can be assigned by qualified organizations or personnel for inspection and replacement, or contact the after-sales engineer of the supplier.

螺栓的拧紧力矩见表 **4.6.1**。Tightening torque of bolts is shown in Table 4.6.1

表 4.6.1 螺栓拧紧力矩表

Table 4.6.1 Tightening torque of bolts table

单位 Unit: kg·m

等级 Level / 螺栓大小 Bolt	4.8S	8.8S	10.9S
M12	2.5	5.0	8.0
M14	3.5	7.5	12
M16	5.5	12	19
M18	7.6	16	26
M20	11	23	36
M22	14	31	49
M24	18	39	62
M27	27	58	93
M30	36	78	124
M33	49	105	167
M36	63	135	216
M39	81	175	280
M42	100	218	349

M45	125	272	435

4.7 定期更换零件项目 Regular replacement parts project

序号 No	部套名称 Part name	检查项目 Inspection items	检查/更换周期 Inspection/Replacement cycle	具体实施方法 Specific implementation method	物资代码 Material code
1.	楔形组件 Wedge assembly	螺栓更换、有变形或损坏的楔块更换 Bolt replacement, replacement of deformed or damaged wedge blocks	每 60 月 Every 60 months	联系售后工程师 Contact after-sales engineer	
2.	编码器连轴器 Encoder coupling	更换 Replacement	每 60 月 Every 60 months	联系售后工程师 Contact after-sales engineer	
3.	电机安装螺栓 Motor mounting bolts	更换 Replacement	每 60 月 Every 60 months	联系售后工程师 Contact after-sales engineer	01030830000080341
4.	变频器控制器纽扣电池 Frequency converter controller button cell battery	更换 Replacement	每 20 月 Every 20 months	联系售后工程师 Contact after-sales engineer	

4.8 自动润滑系统点检项 Automatic lubrication system check item

为了确保系统长期安全稳定运行，我们建议严格按照如下周期对系统进行维护。Maintain the system at the following intervals to ensure the long-tern security and stability of the system.

名称 Name	检验内容 Inspection content	间隔 Interval	耗时 Time-consuming
油箱 fuel tank	检查是否有物理损伤、检查润滑油 Check for physical damage and check for lubricating oil	取决于消耗 Depends on consumption	约 0.1 小时 About 0.1hours
管路 防护管 pipeline Protective tubes	检查是否有机械损伤，检查密封性，必要时更换 Check for mechanical damage, check tightness, and replace if necessary	2 个月 2 months	约 0.2 小时 About 0.2 hours
螺纹连接 Threaded connection	检查机械损伤、密封性，必要时重新上紧并标识锁紧线 Check for mechanical damage, tightness, retightening if necessary, and marking locking wires	12 个月 12 months	约 0.3 小时 About 0.3 hours
泵 pump	检查机械损伤，检查泵功能 Check for mechanical damage, check pump function	3 个月 3 months	约 0.1 小时 About 0.1 hours
压缩空气 pressurized air	清洁过滤器 Clean the filter	6 个月 6 months	约 0.15 小时 About 0.15

			hours
油气互锁喷嘴 Oil-gas interlocking nozzles	对油气互锁喷嘴用压缩空气吹扫杂质 去除油迹 检查机械损伤及磨损，必要时更换 The oil-gas interlocking nozzle is purged with compressed air to sweep away impurities Remove oil traces Check for mechanical damage and wear and replace if necessary	3 月 March	约 3 小时 About 3 hours
电气控制系统 Electrical control system	关闭控制系统电源，更换/备份数据 Power off the control system and replace/back up data	1 年 1 year	约 0.1 小时 About 0.1 hours

5 售后服务 After-sales Service

设备使用过程中，若需要武汉船用机械有限责任公司（WMMP）的支持，请按下述信息与 WMMP 售后服务中心取得联系。

During the use of the equipment, if you need the support of Wuhan Marine Machinery Plant Co., Ltd. (WMMP), please contact the WMMP after-sales service center according to the following information.

地址： address	中国湖北省武汉市青山区武东街九号No. 9, Wudong street, Qingshan District, Wuhan City, Hubei Province, China
传真fax：	（86-27）68867288
联系人：	宗雅月
电话tel：	400-1111-461 （86-27）68867129
邮箱email：	afterservice-bx@ public.wh.hb.cn wmmp@public.wh.hb.cn
邮编： Zip code	430084
网址： website	www.wmmp.com.cn

5.1 如何购买备件 How to purchase spare parts

向 WMMP 购买备件时，请提供以下信息，以便我们能以最快的速度提供相应的备件：

When purchasing spare parts from WMMP, please provide the following information so that we can provide corresponding spare parts as soon as possible:

1. 采购方的名称及详细地址 Name and detailed address of the purchaser；
2. 采购方的联系方式 Contact information of the purchaser；
3. 备件（零部件）的名称 Name of spare parts (parts)；
4. 备件（零部件）的数量 Quantity of spare parts (parts)；
5. 备件（零部件）对应的完工图号 As built drawing number corresponding to spare parts (parts)；
6. 备件（零部件）的备件号或所属图号及其在图中对应的序号 Spare part number or drawing number of spare parts (parts) and their corresponding serial number in the drawing
7. 交货时间及地点 Delivery time and place；

8. 采购方希望的投递方式 Delivery method desired by the purchaser。

采购方提供的信息越全面，则越有利于WMMP提供更有效的服务。

The more comprehensive information provided by the purchaser, the more effective SERVICE provided by WMMP.

采购清单请按下面的地址投递；投递方式：电话、传真、电子邮件，尽量以电子邮件或传真的方式投递采购清单，采购清单见附件。

Please deliver the purchase list to the following address; Delivery method: telephone, fax and e-mail. Try to deliver the purchase list by e-mail or fax. See the annex for the purchase list.

5.2 如何申请售后服务 How to apply for after-sales service

若设备在使用中出现故障，需 WMMP 售后服务中心参与维修，请与 WMMP 售后服务中心取得联系，并提供以下信息：

If the equipment fails in using, WMMP after-sales service center is required to participate in the maintenance. Please contact WMMP after-sales service center and provide the following information:

1. 设备和船体（或平台）所在的详细地址 Detailed address of equipment and hull (or platform)；
2. 设备的名称及型号 Name and model of equipment；
3. 故障描述 Fault description；
4. 发生故障的相应零部件（如果能够判断的话）及相应代号 Corresponding parts and components with faults (if they can be judged) and corresponding codes；
5. 需方的联系方式 Contact information of the demander

采购方提供的信息越全面，则越有利于 WMMP 提供更有效的服务。The more comprehensive information provided by the purchaser, the more effective SERVICE provided by WMMP.

报修方式：电话、传真、电子邮件，尽量以电子邮件或传真的方式报修。

Repair application method: telephone, fax and e-mail. Try to apply for repair by e-mail or fax.

任何时候任何地点，当设备出现故障时，请与售后服务中心联系，WMMP 将提供优秀的服务。

At any time, anywhere, in case of equipment failure, please contact the after-sales service center. WMMP will provide excellent service.

采购清单Purchase list					
用途purpose	□设备需要equipment needs □备件储备spare parts reserve				
采购方联系方式Purchaser Contact information	地址address				
	传真Fax				
	电话Telephone				
	电子邮箱E-mail				
交货地点Place of delivery					邮编Zip code
采购内容Procurement content					
序号no	备件号Spare part No	名称name	数量 quantity	图号Drawing No	备注Remark
公 司 company				签章signature 日期date	

Appendix1.附录 1.齿轮箱的拆装说明 Gearbox disassembly and assembly specification

一、齿轮箱的拆卸说明 Gearbox disassembly specification

1、齿轮箱拆卸前的准备确认 Preparation before gearbox disassembly

- 确认需拆卸的齿轮箱周围干燥清洁、拆卸条件安全可靠。在拆卸齿轮箱的过程中，需找好合适的空间安放齿轮箱。
- 确认拆装过程中支撑齿轮箱的吊葫芦准备到位。
- Confirm that the surrounding of the gearbox is dry and cleanly and safe for disassembling. During the disassembly, it needs enough space to emplace the gearbox.
- Confirm that lifting device is prepared to support gearbox during the disassembly

2、齿轮箱的拆卸 gearbox disassembly

2.1、放齿轮箱润滑油

按（齿轮箱的油位、加油及放油）要求，将齿轮箱中的润滑油放完。

2.1、drain lubricant oil from gearbox

According to the requirements（ about oil level、supply and drain）, drain lubricant oil from gearbox.

2.2、拆卸电机及制动器

用合适吊装锁紧并支撑电机，拆卸电机的螺栓，取出电机及制动器，并搁置在干燥清洁的位置。拆卸过程中，小心齿轮箱输入端的 O 密封圈，防止密封圈脱落。

2.2、motor and brake disassembly

Use the suitable hoist to lock and support the motor, and disassemble the inner hexagon bolts of motor, and then take out the motor and brake and put them at the dry and cleanly place. During the disassembly, pay attention to input end’s “O” type seal packing ring and avoid packing ring sloughing.

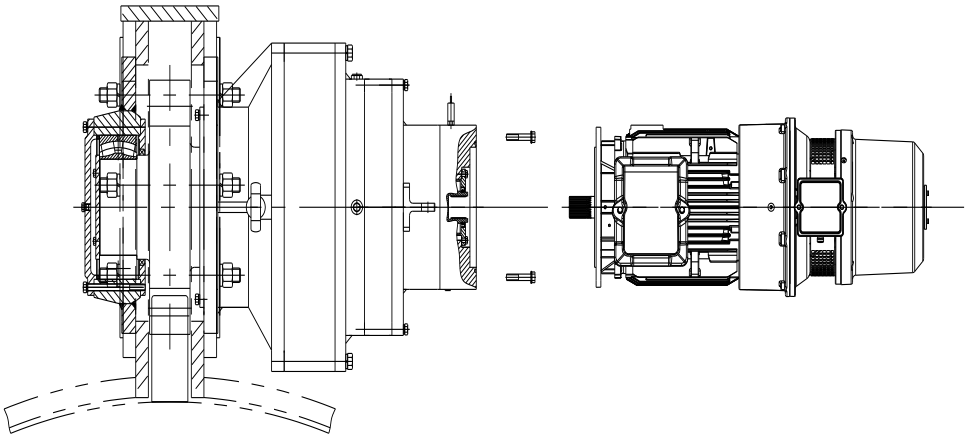

图 2.1 电机拆解图

Figure 2.1 The disassembly diagram of motor

2.3、拆解扭矩传感器

用内六角扳手拆除扭矩传感器安装螺钉，拆除扭矩传感器。

2.3、Torque Sensor disassembly

Using socket head wrench to dismantle the installing bolts of torque sensor, then dismantle the torque sensor.

2.4、齿轮箱划线定位

沿齿轮箱的前法兰及后法兰座垂直直边，在安装架上划线，齿轮箱拆卸后确保其能正确复位，详见图 2.2 中的齿轮箱定位线。

2.4、gearbox mark locating

Mark mounting line along fore flange and back flange’s support vertical boundary line in order to reset gearbox accurately, for details seeing attached figure 2.2.

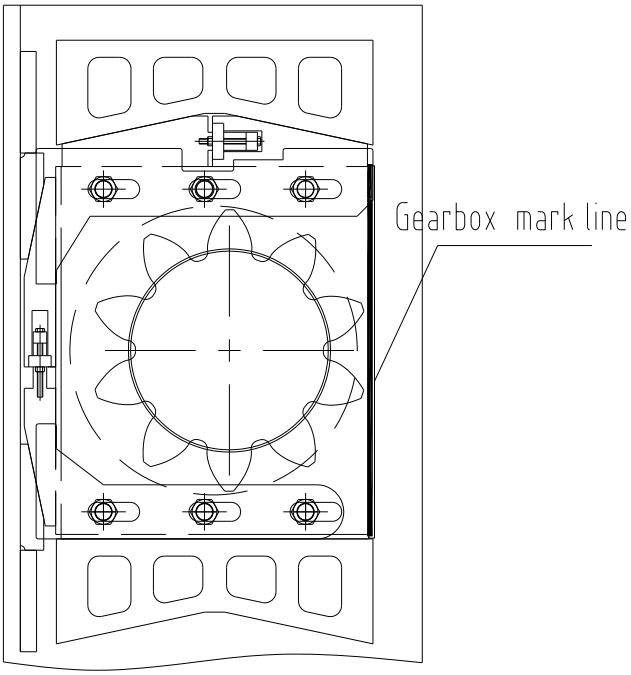

图 2.2 齿轮箱定位线

Figure2.2 The boundary line of gearbox

2.5、支撑齿轮箱自重

采用不低于 5ton 的吊装锁紧并支撑齿轮箱，用于支撑齿轮箱的重量。

2.5、support gearbox deadweight

Use the lifting device capacity of the 5 tons locking and supporting the gearbox.

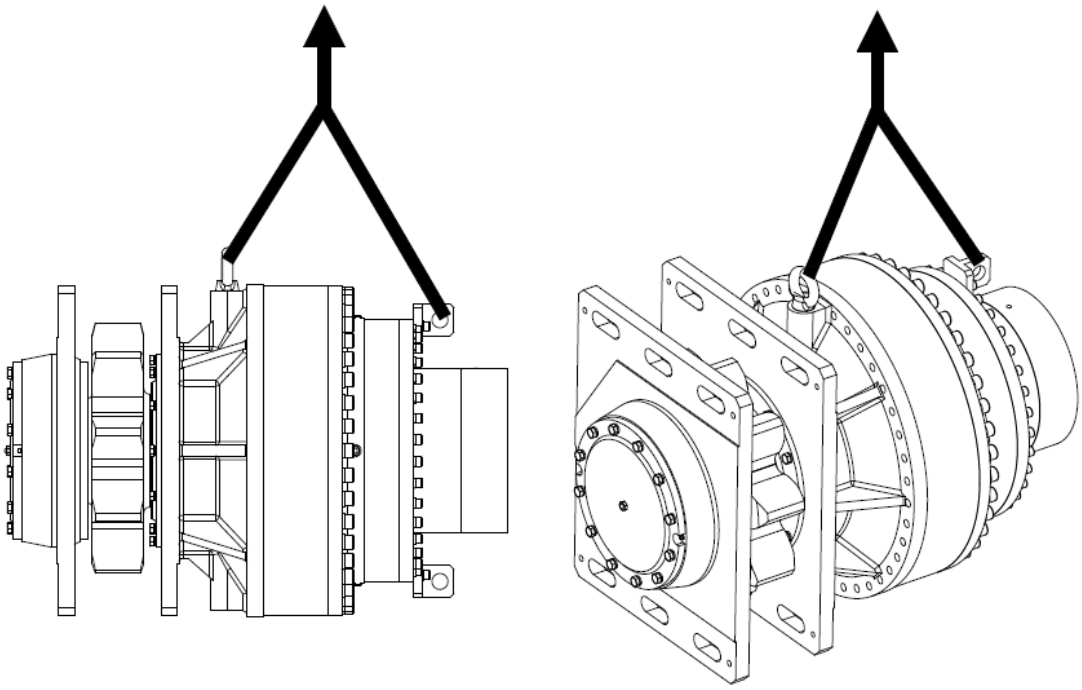

Figure2.3 the lifting of gearbox

图 2.3 齿轮箱吊装

2.6、松双头螺栓及压板，拆卸楔形锁紧组件

a.松齿轮箱法兰上水平的 3 个双头螺栓螺母，取压板及水平楔形锁紧组件。

b.松齿轮箱法兰下水平的 3 个双头螺栓螺母，取压板及垂直楔形锁紧组件。

2.6、loosen stud and pressure plate, disassemble wedge-shaped locking device

a. Loosen three horizon studs above gearbox flange and take out pressure plate and horizon wedge-shaped locking parts.

b. Loosen three horizon studs below gearbox flange and take out pressure plate and vertical wedge-shaped locking parts.

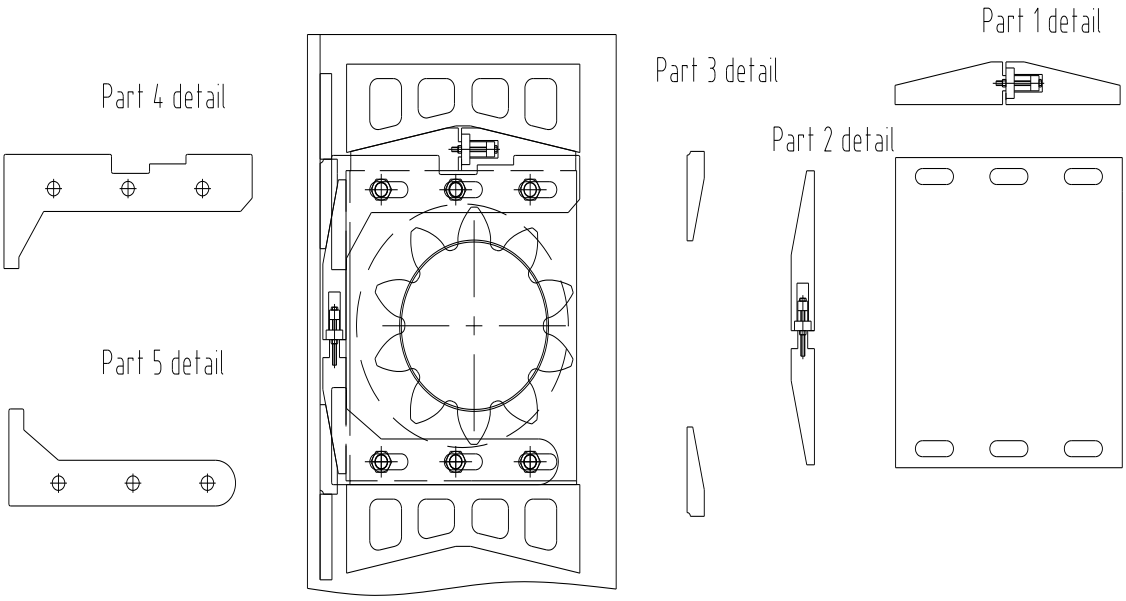

图 2.4 拆卸楔形锁紧组件

Figure2.4 The disassembly diagram of locking device

2.7、拆齿轮箱后法兰座

使用 4 个 M16 螺栓拧入顶丝孔顶住安装架，同步拧入 4 个螺栓，整体拆卸齿轮箱后法兰座组件。

2.7、disassemble back flange support of gearbox

There four thread holes in the back flange support of gearbox; using four bolts screw into the hole and the back flange can disassemble.

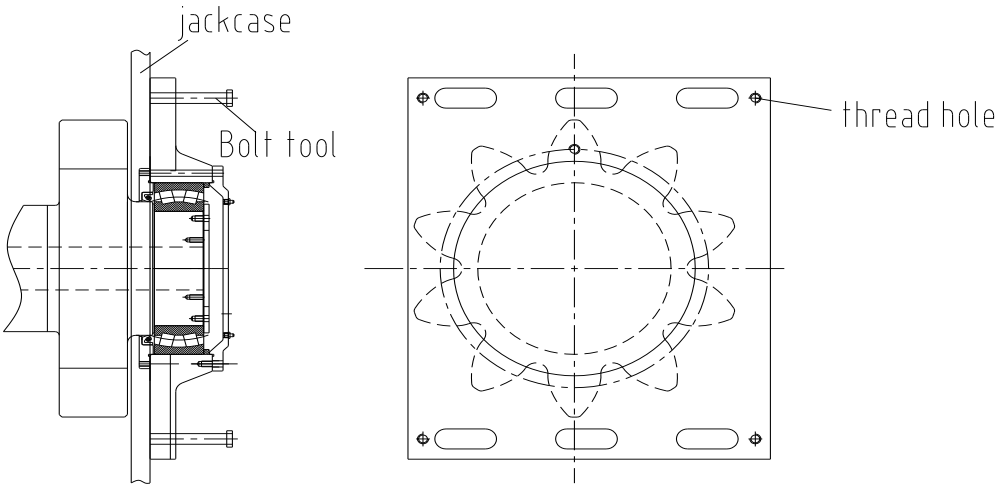

图 2.5 拆齿轮箱后法兰座

Figure2.5 The disassembly diagram of gearbox's back-flange support

复装时，注意不要损伤已经装好的密封。

Notice: do not hurt the installed seal packing ring when re-assembly.

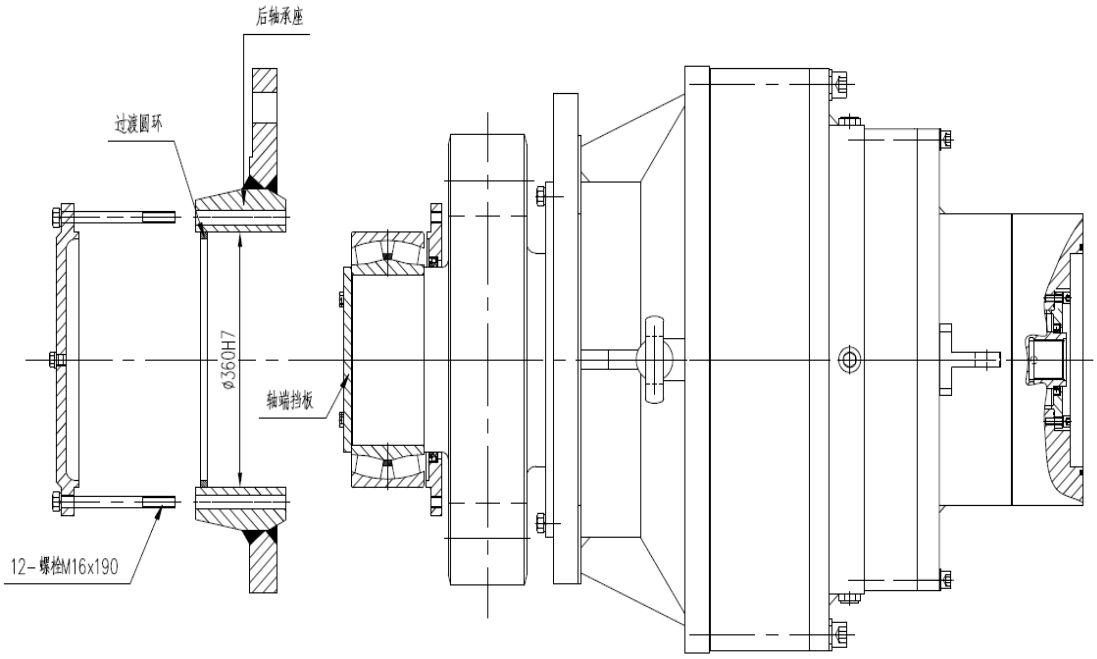

Figure2.6 The re-assembly diagram for gearbox back flange

图 2.6 齿轮箱后法兰重新组装图

2.8、将齿轮箱爬升齿轮脱出安装撬，吊装至指定位置

在垂直吊耳上布置水平缆绳，施加作用力，将齿轮箱爬升齿轮脱出安装撬，吊装至指定位置。

2.8、Pull climbing gear out jacking case and hoist it to appointed location

Lay a horizon cable on the vertical lifting lug and apply force and pull climbing gear out Jacking case, and then hoist it to appointed location.

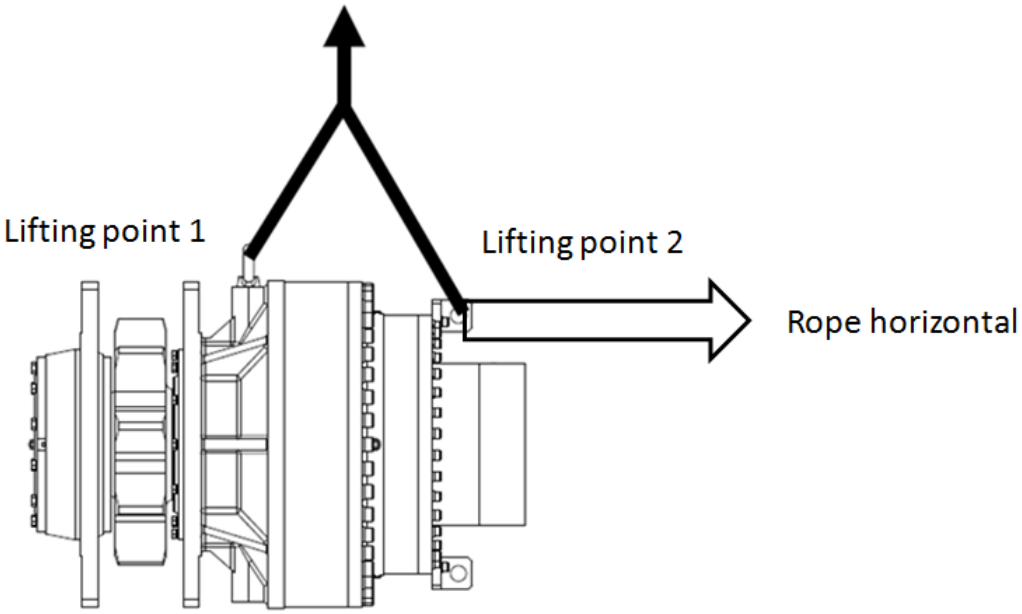

图 2.7 齿轮箱拆解图

Figure2.7 The disassembly diagram of gearbox

二、齿轮箱的安装说明 Gearbox assembly specification

齿轮箱的安装说明与第一章的齿轮箱的拆卸说明反向，请参照第一章进行齿轮箱的安装。

Gearbox assembly relative to disassembly is in reverse sequence, so assemble gearbox can consult the section one at appendix.

齿轮箱安装时需检验如下项目：

It needs to check items during assembling gearbox, as follow:

1、复位后齿轮箱的位置 Check the position after reset

检验标准：复位后，齿轮箱法兰垂直边与齿轮箱定位线重合，误差在±0.5mm 内；

Test standard: after reset, gearbox flange vertical boundary line is in doublication with position line of gearbox, and error should be control within ±0.5mm.

楔形组件配合面间隙

Gap between the matching surfaces of wedge-shaped locking system

检验标准：

Check standard:

a、①～⑤配合面 70%间隙不低于 0.1mm，其余不低于 0.2mm；

a、Gap length among the matching surface of wedge-shaped part No.1, No.2, No.3, until No.5 is less than 0.1mm and occupation scale is 70 percentages; the other is less than 0.2mm.

如检测值未达标，通过拂配方式满足上述检验标准。

If the result of test cannot meet the standard, it needs mated pair until meet the standard.

Appendix2.附录 2.油料清单 List of oil

	油料名称 Oil name	品牌及型号 Brand and model	使用位置 Use location	备注 Remark
1.	润滑脂 Grease	Mobilth SHC 460	齿轮箱端部轴承使用润滑脂 The end bearings of the gearbox are lubricated with degree.	
		Mobilth SHC 1000 Special Suitable for temperatures below 10 degrees 温度 10 以下可以用：Mobil Dynagear 600SL Mobil OGL007	齿轮齿条 Gear rack	
2.	润滑油 Lubricant	ISOVG220、320	齿轮箱内部 Inside the gearbox	润滑油须具有挤压添加剂，在零下 10 摄氏度具有流动性的合成齿轮润滑油 The lubricating oil must have an anti-squeal additive and be a synthetic gear oil with flowability at temperatures below -10 degrees Celsius.

Appendix3.附录3.电机及制动器维护手册 Maintence manual for motors and brakes

电机及制动器使用
维护手册

完工文件

平台升 28A-1

Nidec

All for dreams

Recommandations générales pour stockage et mise en service

General recommendations for storing and installing

Moteurs asynchrones triphasés

Three-phase induction motors

Moteurs aluminium types LS / LSES
Moteurs fonte type FLSES
Moteurs ouverts IP23 type PLSES

LS / LSES, aluminium motors
FLSES, cast iron motors
PLSES, IP23 drip-proof motors

Reference: 1889 lg - 2019.03 / w

LEROY-SOMER™

Recommendations for storing and installing induction motors

This document is supplemental to the General «Installation and Maintenance» Instructions, ref. 3770 & 4850

• CONFORMITY
- Our motors conform to standard EN/IEC 60034-1 , and therefore to the Low Voltage Directive 2006/95/EC, which is demonstrated by their CE marking

• RECEIPT
- Check the state of the motor. If the motor or even the packaging has been damaged, notify your haulage contractor (if required, renovation cannot be undertaken under warranty).
- Check that the correct motor has been delivered (mounting arrangement, information on nameplate).

• STORAGE
- Place the equipment in a clean dry area, protected from impacts, vibrations, temperature extremes and in an environment with relative humidity less than 90%.
- Do not remove the rotor blocking device (roller bearings).
- When storing for longer than six months, consult the manufacturer.

• BEFORE INSTALLATION
- Check the insulation resistance of the windings (phase/earth R greater than 10 MΩ) and that the bearings are working correctly if the motor has been stored longer than six months.
- Drain any condensation water.
- Check motor compatibility with its environment before installation and over its entire operating lifetime.

• MECHANICAL INSTALLATION
- Installation must be performed by qualified personnel.
- Install the motor in the same type of environment (Temperature, Relative humidity, Altitude) as specified in the order.
- Lifting the motor: when the motor is equipped with lifting rings, these are only to be used for lifting the motor. **(The motor must not be allowed to overturn).**
- Mount the motor in its anticipated position, on a firm, level bed to prevent distortion and vibration.
- Ensure that the fixing screws (foot or flange) are tightened to the correct torque. The screw diameter must fit the fixing holes.
- Ensure that alignment of the mechanical shafts and mounting of the coupling or pulley are carried out correctly.
- Do not knock the shaft or the coupling when mounting, do not damage the seal, do not over-shoot the shoulder of the shaft.
- Make sure that the motor is properly cooled. The air inlets and outlets must be clear.
- Check that the loads applied to the motor shaft (especially the belt tension) comply with the maximum values stated in our technical catalogues.
- The condensation water drain holes should be at the bottom of the motor ; dot not install the motor in a position other than the one stated in the order. When there is no risk to the motor protection, the drain plugs for the condensation water can be removed.
- Protected motors (IP 23) must be installed under cover.

• ELECTRICAL CONNECTION
- Cables must be connected by qualified personnel, with the power off.
- Select the protection system and the feed cables (the drop in voltage during the starting phase must be less than 3%) according to the details on the identification plate.

- Tighten the nuts of the terminals, connectors and supply cables to the torque (N.m) indicated below :

Terminal	M4	M5	M6	M8	M10	M12	M16
Steel	1	2.5	4	10	20	35	65
Brass	1	2	3	6	12	20	50

• *No washers nor nuts should be inserted between the lugs of the motor and those of the supply cable.*

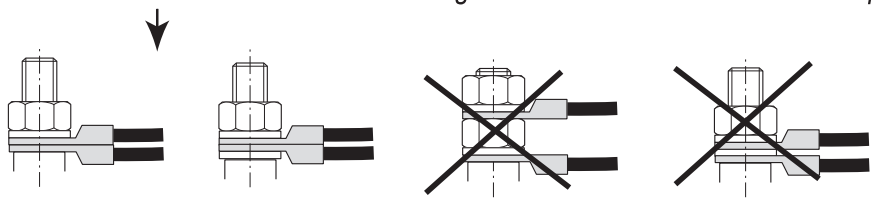

- When connecting cables without connectors, use calipers.
- Connect the thermal protective devices and accessories.
- Ensure that the cable gland is dust and damp proof :
the cable gland must correspond to the diameter of cable used.

• *Bring the cables into the terminal box with a bending radius which prevents water from penetrating via the cable gland.*

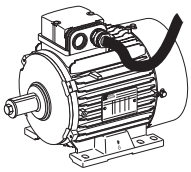

- Connect according to the coupling information on the identification plate and the diagram in the terminal box. Check the direction of rotation of the motor.
- Earthing : when connecting to earth, conform to the current national standards.
- **Do not connect the motor if you do not understand** the wiring diagram or if this is missing : please consult Leroy-Somer.
- The installer is responsible for adhering to the rules on electrical compatibility applicable in the country where the products will be used.

• COMMISSIONING

- The motor is designed to operate at the speeds shown on the nameplate (do not exceed the maximum speeds stated in our technical catalogues).
- Comply with the voltage and frequency indicated on the nameplate (do not deviate by ± 5% from the voltage limits indicated or by ± 1% from the frequencies).
- Certain applications require particular construction specifications.
Do not use a motor for hoisting which is not marked either S3 or S4.
Do not use the motor for anything other than indicated on the nameplate, particularly not for hoist-ing applications.
- Check the voltage unbalance on the 3 phases remains below 2%.

• MAINTENANCE

- Ensure that the mechanical and electrical installation temperature limits are respected.
- Refer to the nameplate for the frequency of greasing the bearings and the type of grease to be used. If no details are given, the bearings are greased for life.

• NOISE LEVEL

- The motors conform to the requirements of standard EN 60034-9.

• RECYCLING

- When reaching end-of-life, the different motor components should be entrusted to a material reclaiming contractor to be recycled.
- Recycling the components of a three-phase asynchronous motor does not call for particular treatment.

WARNING : These specifications, instructions and descriptions concern standard operation. They do not take into account any variations in construction or special adaptations.
If these recommendations are not respected, the motor may deteriorate prematurely and manufacturer guarantee may not apply.

zh

异步电动机的
保存和使用说明

该文件作为3770号“安装和维修”总说明书的补充材料使用。
4850

• 合格性
–本马达符合多项行业标准，包括 EN/IEC 60034-1 标准和 2006/95/EC 低电压指令及其 CE 认证。

• 验收
–检查电动机状况。如果发现损坏或是外包装破损，请及时向运输商申诉（该类情况引起的延期和维修将不在保险赔偿范围内）。
–检查电动机是否与订单相符（制造外形，产品信息卡参数）。

• 设备保存
–将设备存放在干净，干燥的仓库内，防止设备受到撞击，震动以及巨大温差变化的影响，要求仓库内空气湿度低于90%。
–请勿取消转轮的固定装置（转轮轴承）。
–如果保存时间超过6个月，请向制造商咨询相关信息。

• 设备安装前期准备
–检测线圈绝缘电阻（相位/地线电阻R大于10MΩ兆欧），检查存放6个月以上的电动机轴承是否能正常运行。
–清除设备冷凝水雾。
–在设备安装之前以及安装进行期间，确认电动机与运行环境是否相互适应。

• 机械安装
–设备安装必须由具备相应技术资质的专业技术人员进行。
–设备的安装应按照订单要求在合适的环境中进行（温度，相对湿度，海拔高度等）。
–电动机的抬升：当电动机上配备有抬升环时，说明只能使用该环进行设备抬升（禁止对电动机进行翻覆和摇晃）。
–根据订单要求将电动机安装到指定位置，设备必须安装在一个平整而坚固的基座上以避免变形和震动。
–确保固定螺钉拧紧力矩的正确性（固定块或法兰）。 螺钉的直径必须与固定孔相匹配。
–确保机械轴的直线性，连接件或皮带轮的装配必须符合专业规定。
–在安装过程中请勿敲击轴承或连接件，请勿损坏密封条，请勿超过轴承榫肩。
–保证电动机制冷功能的正常运行。保留适当的进气和出气口距离。
–检查电动机轴承的载荷（特别是皮带的张力）是否与技术目录中给出的最大数值相符。
–冷凝水雾排放孔必须位于电动机下部；请勿将电动机安装在非订单指定位置。如果不会对电动机保护系统造成风险，可以将冷凝排放孔的堵盖拔掉。
–受保护电动机(IP 23)应该被安装在室内。

• 电子连接
–线束连接必须由具备资质的技术人员在关闭电源的状态下进行。
– 根据仪表显示盘的技术参数和特性选择保护系统和电源线束（在启动阶段电压的回落不得超过3%）。

–根据下列对应的力矩参数(Nm牛米)进行端子，卡箍和电源线束上各类螺母的拧紧。

端子	M4	M5	M6	M8	M10	M12	M16
钢板	1	2,5	4	10	20	35	65
铜板	1	2	3	6	12	20	50

• 在电机端子以及电源线套管之间既不要使用垫片，也不要使用螺母.

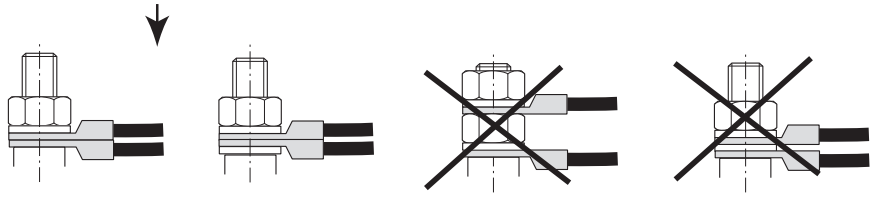

– 如果线束连接不带卡箍，请使用卡钳。
– 连接热保护装置和附件。
– 确保密封垫的密封性：密封垫的尺寸必须严格符合使用线束的直径。

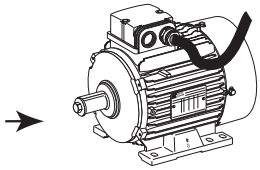

• 将线束以一定的拱度连接到端子盒以避免水通过密封垫渗入。

– 根据仪表显示盘以及端子盒内图纲的指示进行电子连接，检查电动机的旋转方向。
– 地线连接：根据各个国家相关的标准要求进行连接。
– 如果您对连接图表的理解有疑问或是技术图表缺损，请不要进行发动机连接：立刻向我们咨询。
– 设备安装人员有责任严格遵守设备使用国的电子兼容性规定。

• 使用
–电动机的设计旨在以仪表盘设定的速度运行（请勿以超过技术目录中规定的最大速度值运行电动机）。
–遵守仪表盘指示的电压和频率（极端电压差异不得超过±5%，频率差异不得超过±1%）。
–某些操作需要参照专门的产品技术说明。
请勿在抬升过程中使用非S3或S4型电动机。
请勿使用电动机进行非仪表盘设定功能的操作，特别是进行电动机抬升操作时。
– 检查三相电压的不平衡仍低于 2%。

• 日常维修保养
–确保在机械和电子安装过程中严格遵守技术要求和规范。
–参考仪表盘设定的轴承润滑周期和润滑油种类。如果没有具体要求，轴承已经得到终生润滑保证。

• 噪音级别
–电动机在噪音领域符合 EN 60034-9 标准的规定。

• 回收利用
在零部件使用寿命终结时，建议将它们寄回到材料回收公司，可以将发动机不同零部件再次回收利用。在三相异步发动机上使用过的零部件再次回收利用时，不需要进行特殊处理。

注意：一般的设备技术描述，指导和说明均为标准执行内容。它们未包括各种设备的专用技术说明。
任何违反使用说明的行为均有可能够引起电动机的过早损毁，由此引起的损失将不在设备生产商的保险赔偿范围内。

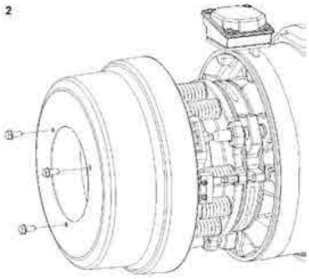

Installation guide

FCPL60H brake motor

LEROY-SOMER™

1-INSTALLATION 安装..... 3

2-CHARACTERISTICS 特性..... 3

3-ELECTRICAL CONNECTION 电气连接..... 4

3.1- Power supply via CDF7 doping device 通过CDF7整流器供电..... 5

4-WIRING FOR OPTIONS 选配项..... 6

4.1- Microswitch(es) 微动开关 6

4.2-Space heater 空间加热器..... 7

4.3-Temperature sensors 温度传感器..... 7

5- MAINTENANCE 维修..... 8

5.1 - Adjusting the air gap 调整气隙..... 8

5.2 - Replacing a brake disk 替换刹车盘..... 9

5.3 - Adjusting the microswitches 调整微动开关..... 10

5.3.1 -Brake release indicator microswitch 制动释放指示微动开关.....10

5.3.2 - Wear indicator microswitch 磨损指示微动开关..... 11

6 - TROUBLESHOOTING GUIDE 故障排除指南..... 12

6.1 - CDF7 device test CDF7设备测试..... 13

LEROY-SOMER reserves the right to modify the characteristics of its products at any time in order to incorporate the latest technological developments. The information contained in this document may therefore be changed without notice.

1 - INSTALLATION 安装

When installing brake motors, follow the recommendations in the motor general manual.
安装制动电机时，请遵循电机通用手册中的建议。
Make sure that the brake is engaged when the motor is stationary.
当电机静止不动时，要确保制动。

Attention: The brake should not be exposed to humid and harsh environments for a long time, such as removing the brake protective cover and using the manual release device for long-term release.
注意：制动器不能长期裸露在潮湿恶劣的环境中，例如拆掉制动器防护罩，手动释放一直长期释放。

2 - CHARACTERISTICS 特性

Braking torque: 刹车扭矩

Quantity x Reference 数量x代码		Brake with 1 Disk 单碟制动器	
Springs (No. 28) 弹簧	**Spacers (No. 21)** 垫片	**Torque (N.m)** 扭矩	**Air gap (mm)** 气隙
6 x 058E123054	3 x 070E202054	400	0.5

The brake is designed to operate within the limits described in the brake motor catalogue.
The thermal capacity and maximum number of braking operations per hour must be complied with to ensure safe brake operation.
该制动器被设计为在制动电机目录中描述的限制范围内运行。
必须遵守每小时制动操作的热容和最大次数，以确保安全制动操作。

In the event of uncertainty, check the brake disk thickness, its general condition and its lining before the equipment is returned to service.

If any doubt remains, please consult Leroy Somer.

在出现不确定情况时，应在设备恢复使用前检查制动盘的厚度、总体状况和摩擦片。

如有疑问，请咨询利莱森玛。

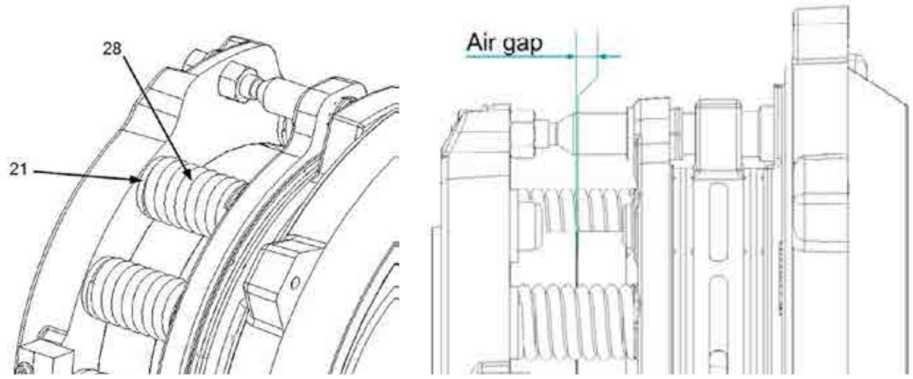

3 - ELECTRICAL CONNECTION 电气连接

The FCPL60H brake is equipped with a D.C. coil.
FCPL60H制动器配备直流线圈。
For motors starting at reduced voltage or operating at variable voltage or frequency, a separate brake power supply should be provided.
对于以降低电压启动或以可变电压或频率工作的电机，应提供单独的制动电源。

Electrical characteristics of yokes: 磁轭电磁特性

Voltage (V) 电压	Duty 工作制	R(Ω) 电阻	I(A) 电流	Wire colours 电缆
20	S3	1,9	10,5	Green/Green 绿/绿
20	S1	4.1	4,8	Green/White 绿/白
100	S3	55	1,8	Yellow/Yellow 黄/黄
100	S1	105	0.95	Yellow/White 黄/白
180	S3	160	1.2	Blue/Blue 蓝/蓝
180	S1	320	0,6	White/Blue 白/蓝
200	S3	210	0.95	Black/Black 黑/黑
200	S1	427	0.46	Black/White 黑/白

Duty: 工作制
Our coils are defined for a maximum operating factor of 60% in intermittent duty (S3) or for continuous duty (S1).
我们的线圈被定义为在间歇工作(S3)或连续工作(S1)的最大工作系数为60%。
They can be distinguished, when the brake cover is removed, by the colour of the power supply wires.
当刹车盖被拆除，他们可以通过电源电线的颜色区分。
The brake is supplied by a CDF7 doping device, the coil is always in intermittent duty (S3), even if the brake is operating in continuous duty (S1).
制动器是由CDF7整流器提供的，线圈总是在间歇工作(S3)，即使制动器是在连续工作(S1)。
Depending on the braking torques or options chosen, the brake can be supplied via:
根据制动扭矩或选择的选项，制动器可以通过:
- a CDF7 doping device (boost) CDF7 整流器(升压)

.

3.1 - Power supply via CDF7 doping device 通过CDF7整流器供电

Principle: 原则

The CDF device can be used to supply a D.C. brake directly from the A.C. supply.
CDF装置可用于直接从交流电源向直流制动器供电。
Two functions are integrated in an automatic sequence:
两个功能集成在一个自动序列中:
- a doping time (0.5 s) is applied to reduce the brake response time
施加励磁时间（0.5秒）以减少制动响应时间
- a reduced holding voltage allows the brake to remain attracted while reducing the coil temperature rise.
降低的保持电压允许制动器保持被吸引，同时降低线圈的温升。

This device is not integrated in the motor, it is provided separately and should be mounted inside the brake motor control cabinet.

该装置未集成在电机中，单独提供，应安装在制动电机控制柜内。

Mechanical characteristics 机械特性

Mounting: 安装
DIN RAIL ref. EN 50022 – NFC 63015 – DIN 46277-3.
Ingress protection: IP20 (except for removable connector)
输入保护:IP20(可拆卸连接器除外)
Ambient temperature: -16°C to 55°C (-25°C to 85°C with derating)
环境温度:-16° C ~55° C(-25° C ~ 85° C带降额)
Relative humidity: 98% max (non condensing)
相对湿度:最高98%(不凝结)
Storage temperature: -40°C to 100°C
存储温度:-40℃~ 100℃
Shock: < 100 m/s² 16 ms (IEC 60 068-2-29)
冲击:< 100m /s²16ms (IEC 60 068-2-29)
Vibration: < 5 m/s² 10…150 Hz (IEC 60 068-2-6)
振动:< 5m /s²10…150hz (IEC 60 068-2-6)
Cable connection cross-section: 2.5 mm² max
电缆连接截面:最大2.5 mm²
Weight: 200 g
重量:200克

Electrical characteristics 电气特性

A.C. power supply: 220 V to 480 V (-15%; +6%)
交流电源供应：: 220 V to 480 V (-15%; +6%)
Doping voltage (D.C.): 0.9 x input voltage
励磁电压（直流）：0.9倍输入电压
Holding voltage: 0.22 x input voltage
保持电压：0.22倍输入电压
Maximum current: 3.5 V RMS (5 s integration)
最大电流：3.5 V RMS (5 s集成)
Doping time: 0.5 s
励磁时间：0.5秒
Doping starting time: 15 ms max
励磁起始时间:最大15毫秒

IMPORTANT 重要:

To reduce the brake application response time, the coil should be disconnected on the D.C. supply, between the rectifier terminals 3 and 4.
为了减少制动器制动响应时间，线圈应断开整流器端子3和4之间的直流电源。

This action is obligatory in hoisting applications.

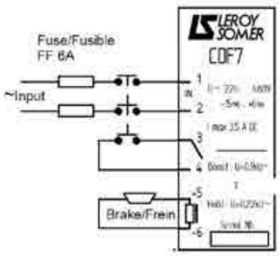

.

此操作在吊装应用中是必须的。

4-WIRING FOR OPTIONS 选配项

4.1Microswitch(es) 微动开关

The brake may be fitted with two microswitches:
制动器可以安装两个微动开关:
- Brake release indicator microswitch
制动器释放指示微动开关
- Brake disk wear indicator microswitch
制动盘磨损指示微动开关

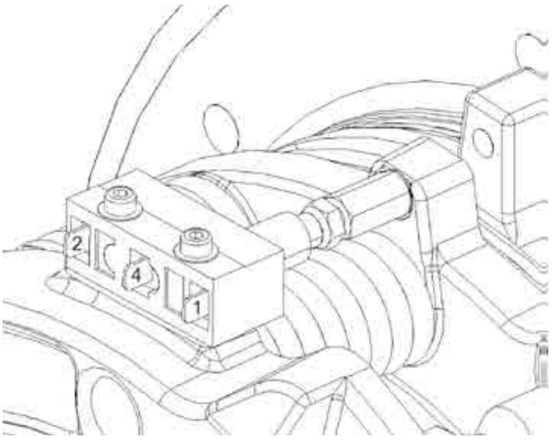

Microswitch: 微动开关
1: common 公共
4: normally open 常开
2: normally closed 常闭

Brake release indicator
制动器释放指示
The normally open contact is open when the braking torque is applied (coil not energised). It closes after the brake is released.
施加制动力矩时，常开触点断开（线圈未通电）。释放制动器后，关闭。
Wear indicator
磨损指示
The normally open contact is closed when the disk is new. It opens when the air gap needs to be adjusted.
当制动盘为新盘时，常开触点闭合。当需要调整气隙时，它会打开。
This option is marked in one of the motor terminal boxes, either by a label attached to the cables in the terminal box, or on a connection diagram if supplied
此选项通过附在接线盒中电缆上的标签或连接图（如果提供）标记在其中一个电机接线盒中

4.2 - Space heater 空间加热器

The brake can be fitted with a space heater for operation in a harsh environment.
制动器可配备空间加热器，以便在恶劣环境中工作。

Depending on the brake and its IP, the space heater is rated 50 W or 60 W if supplied at its rated voltage of 230 VAC. It is fixed either on the brake support plate, or on the brake yoke. Unless it needs to be replaced, no maintenance nor dismantling is necessary on this option.
根据制动器及其IP，如果以230 VAC的额定电压供电，则空间加热器的额定功率为50 W或60 W。它固定在制动器支撑板上或制动器磁轭上。除非需要更换，否则无需维护或拆卸。

This option is marked in one of the motor terminal boxes, either by a label attached to the cables in the terminal box, or on a connection diagram if supplied.
这个选项是必要的。此选项通过附在接线盒中电缆上的标签或在连接图（如果提供）标记在其中一个电机接线盒中。

Attention: To operate and debug in a humid environment, it is necessary to keep the heater working continuously
注意：在潮湿的环境中运行和调试要保持加热器一直在工作

4.3 - Temperature sensors 温度传感器

The brake yoke winding can be fitted with a maximum of 2 PTC, PTO, PTF sensors on request.
Installation is identical to the thermal sensors fitted on the motor. (Refer to the motor commissioning manual).
This option is marked in one of the motor terminal boxes, either by a label attached to the cables in the terminal box, or on a connection diagram if supplied.
根据要求，制动磁轭绕组最多可安装2个PTC、PTO和PTF传感器。
安装与安装在电机上的热传感器相同。（请参阅电机调试手册）。
该选项通过附在接线盒中电缆上的标签或连接图（如果提供）标记在其中一个电机接线盒中。

5 - MAINTENANCE 维修

CAUTION : before any work is carried out on the brake, it is essential to disconnect the brake motor and check that it is fully discharged.
警告:在制动器上进行任何工作，断开制动电机是必要的，并检查它是完全放电。

A maintenance operation should be performed: 日常维修应该按照如下步骤完成：

- when the brake air gap is too big: > 1.5 mm
当气隙太大： > 1.5 mm
- when the brake disk(s) is (are) worn: minimum permitted lining thickness: 1.5 mm
当制动盘磨损时:最小允许的衬里厚度:1.5毫米

To perform these operations, direct access to the brake is required. For this, refer to the dismantling section corresponding to your motor.
要执行这些操作，需要直接接近制动器。为此，请参阅与您的电机相对应的拆卸章节。

5.1 - Adjusting the air gap 调整气隙

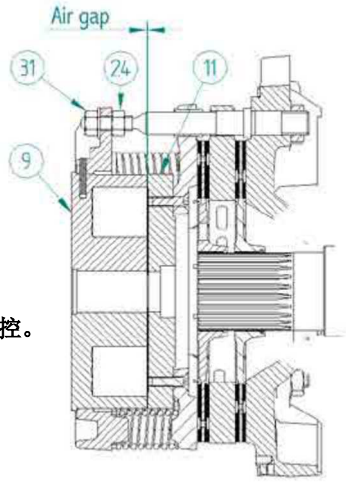

The air gap is the distance separating the armature 11 from the yoke 9 when the coil is not energised.
气隙是当线圈未通电时将电枢11与磁轭9分隔开的距离。
It will be necessary to adjust it when the brake no longer releases normally or when its value reaches 1.5 mm.
当制动器不再正常释放或其值达到1.5 mm时，有必要对其进行调整。
How often the air gap is checked and adjusted depends on the duty, operating factor, motor position and the application.
检查和调整气隙的频率取决于负载、运行系数、电机位置和应用。
An upright motor with S1 duty-6 sts/hr will require greater monitoring than a horizontal motor with S2 duty-30 min.
与S2负载为30分钟的水平电机相比，S1负载为6 sts/hr 的立式电机需要更多的监控。

• Loosen the three nuts 24 (19 spanner) to bring the yoke 9 closer to the armature 11 by tightening the nuts 31 (18 spanner).
拧松三个螺母24（19扳手），通过拧紧螺母31（18扳手）使轭9更靠近电枢11。
• Insert a gauge corresponding to the air gap (see section 2: Characteristics) between the yoke 9 and the armature 11.
在轭9和电枢11之间插入一个与气隙相对应的量规（见第2节：特性）。
The gauge should be able to slide effortlessly and without play at three points the same distance apart around the edge of the yoke.
量规应能够在轭边缘周围相隔相同距离的三个点上轻松滑动，没有间隙。
The gauge with the value Air gap + 0.1 mm must not be able to pass between the yoke 9 and the armature 11.
气隙值为+0.1 mm的量规不能在轭9和电枢11之间通过。

• Retighten the three nuts 24 and 31. If the air gap is set correctly, the brake should engage crisply when energised, and the disk should not rub against it.
•重新拧紧三个螺母24和31。如果气隙设置正确，制动器在通电时应能快速接合，并且制动盘不应与其摩擦。
• Reassemble the motor.
重新安装电机。

5.2 - Replacing a brake disk 替换制动盘

The disk should be changed when one of the linings is worn down to the minimum permitted thickness, ie. 1.5 mm.
当其中一个摩擦片磨损到最小允许厚度，即1.5 mm时，应更换制动盘。。
To perform these operations, direct access to the brake is required. For this, refer to the dismantling section corresponding to your motor.
要执行这些操作，需要直接接近制动器。为此，请参阅与您的电机对应的拆卸部分。

Tools needed to release the brake (not supplied), equipped with manual release handle function, no tools required.
松开制动器所需的工具(未提供)，带手动释放手柄功能的，不需要工具。
Without encoder or 2nd shaft extension option: 1 M16 Threaded rod + 1 Washer (Min outer Ø45) + 1 M16 Nut (Central brake release)
无编码器或第二轴延伸选项:1个M16螺纹杆+ 1个垫圈(最小外部Ø45) + 1个M16螺母(中间释放制动器)
With encoder or 2nd shaft extension option: 2 M8 Threaded rods + 2 Washers + 2 M8 Nuts + Load bearing plate.
带编码器或第二轴延伸选项:2个M8螺纹杆+ 2个垫圈+ 2个M8螺母+承重板
Definition of the load bearing plate. The dimensions are in millimetres. Steel plate:
承重板的定义。 尺寸以毫米为单位。 钢板:

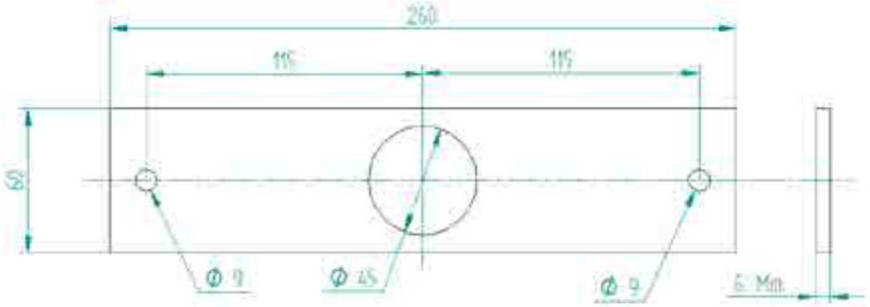

Dismantling 拆解

• Disconnect the brake connections and options.
断开制动器连接和选装件。
• Insert the threaded rods through the yoke 9 and screw them into the armature 11.
将螺杆穿过轭9插入，然后将其拧入电枢11中。
• Tighten the nut(s) to reduce the air gap: a block is created to neutralise the springs and release the brake.
拧紧螺母以减小气隙：形成一个块来中和弹簧并释放制动器。
• Loosen the three adjusting nuts 31 (18 spanner).
松开三个调节螺母31(18扳手)。
• Gradually unscrew the nuts 24 (19 spanner) then slide out the columns 34 from this block.
逐渐拧下螺母24（19扳手），然后从该块中滑出立柱34。
• Remove the worn brake disk(s) 15a (20 - 15b).
拆卸磨损的制动盘15a（20-15b）。
• Clean the friction faces of the end shield 8 and the armature 11 (of the spacer 20), and check that they are clean and dry.
清洁端盖8和电枢11（摩擦盘20）的摩擦面，并检查它们是否清洁干燥。
• Place the O ring seal 73 in the disk hub. For 2-disk brakes, only the disk in contact with the end shield 8 is fitted with an O ring seal 73.
将O形密封圈73放入盘毂中。对于双碟制动器，只有与端盖8接触的圆盘才装配有O形密封圈73。
• Refit the new disk(s) (and the spacer 20), with the hub(s) at the shield end.
重新安装新盘（和摩擦盘20），使轮毂位于护罩端。

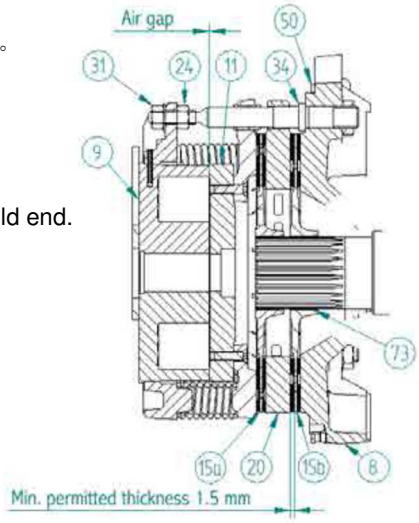

.

Reassembly 重新安装

• Replace the brake block by first engaging the armature 11 on the columns, then fit the nuts 24 before finally passing the yoke lugs 9.
首先将电枢11接合在转向柱上，然后安装螺母24，最后穿过轭凸耳9。

• Bring the friction face of the armature 11 into contact with the disk by gradually tightening the nuts 31.
通过逐渐拧紧螺母31，使电枢11的摩擦面与制动盘接触。

• Position the nuts 24 and bring them into contact with the yoke lugs 9.
拧上定位螺母24，使其与磁轭凸耳9接触。

• Remove the brake release device.
拆卸制动释放工具。

• Adjust the air gap (see section 5.1).
调整气隙（见5.1）

• Change the seal (brake cover seal).
更换密封（刹车罩密封圈）

• Reconnect the brake and options.
重新连接制动器和选装件。

5.3 - Adjusting the microswitches 调整微动开关

CAUTION: for this operation you will need an ohmmeter or a test lamp (not supplied)
注意:在此操作中，您将需要欧姆计或测试灯(不提供)

In theory, there is no need to alter the microswitch setting unless the brake yoke 9 has been changed.
理论上，没有必要改变微动开关设置，除非已经改变了制动磁轭9。
However, depending on how carefully the air gap is set, certain adjustments may be necessary.
然而，根据气隙设置的仔细程度，可能需要进行某些调整。
The microswitch must always be set with the air gap at its rated value, brake applied (not energised).
微动开关必须始终将气隙设置在其额定值，并施加制动(未通电)。

5.3.1-Brake release indicator microswitch 制动释放指示微动开关

•The brake is energized with an air gap of 0
制动器通电气隙为0

• Partially loosen the nut 55.
稍微松开螺母55。

• Bring the screw 54 into contact with the plunger until the microswitch switches. The resistance drops to zero.
使螺钉54与柱塞接触，直到微动开关切换。电阻降至零。

• Tighten the screw by a 1/4 turn (< 2 sides of the hexagonal threaded stud with 1.5 mm pitch), the resistance becomes infinite.
将螺钉拧紧1/4圈（小于两个侧面，螺距为1.5 mm的六角螺柱），电阻变为无穷大。

• Check that, when the armature 11 is in contact with the yoke 9 (brake released), the resistance drops to zero.
检查电枢11与磁轭9接触时（制动器释放），电阻是否降至零。

• Lock the nut 55.
锁紧螺母55。

5.3.2 - Wear indicator microswitch 磨损指示微动开关

•The brake is energized with an air gap of 0
制动器通电气隙为0

• Partially loosen the nut 55.
微微松开螺母55。

• Bring the screw 54 into contact with the plunger until the microswitch switches. The resistance drops to zero.
将螺钉54与柱塞接触，直到微动开关切换。电阻降为零。

• Continue undoing screw 54 by 1 turn, a value which corresponds to the permitted maximum air gap of 1.5 mm. The resistance stays at zero.
继续拧松螺丝54，旋转1圈，这个数值对应于允许的最大气隙1.5毫米。电阻保持在零。

• Lock the nut 55.
锁紧螺母55。

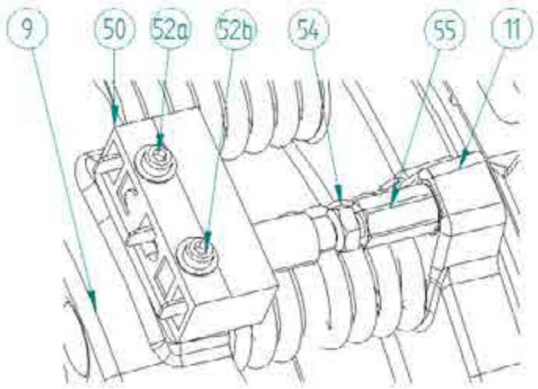

6 - TROUBLESHOOTING GUIDE 故障排除指南

Incident 事故	Possible cause 可能原因	Diagnostics/Remedy
The brake will not release 制动器无法释放	There is voltage at the coil terminals 线圈端子处有电压	The air gap is too big, the brake yoke is not attracting the electric magnet. 气隙太大，制动器磁轭不能吸引磁铁 Adjust the setting and check the disk wear. 调整设置，检查刹车盘磨损情况
		The voltage is too low (U<0.8 Un). 电压太低 (U＜0.8 Un). Correct the voltage to its rated value. 调整电压到额定值
		The coil is disconnected, its resistance is infinite. 线圈断开，电阻无穷大 Change the yoke. 更换磁轭
	There is no voltage at the coil terminals 线圈端子处无电压	CDF7 doping device has stopped working. CDF7整流器停止工作 Test the rectifier or device. 测试整流器或者设备
The pick-up time is too long 启动时间太长	Check the voltage at the coil terminals 检查线圈端子电压	It should not be less than 0.9 x Un with a CDF7 doping Device. 连接CDF7整流器时，电压不应小于0.9 x Un Correct the voltage to the rated value. 调整电压至正确的值
	The air gap is too big 气隙太大	Readjust the air gap 调整气隙
	You have increased the braking torque 已增大刹车扭矩	Revert to the initial setting or consult Leroy-Somer about your problem. 恢复到初始设置或者咨询利莱森玛此问题
The brake engage time is too long 刹车接合时间太长	Check that disconnection is on the D.C. supply 检查是否与直流电源断开	Connect the CDF7 doping device using terminals 3 and 4. 使用3、4端子连接CDF7装置
The braking torque is inadequate 刹车扭矩不够	The friction faces are not clean and dry 摩擦面脏污，不干燥	Clean the friction faces. 清理摩擦面 Redefine your braking torque. 重新定义刹车扭矩
	The disk is worn 刹车盘磨损	Change the disk. 换刹车盘
Constant friction against the lining 与摩擦片的不断摩擦	The air gap is inadequate 气隙不够	Adjust the air gap. 调整气隙

6.1 - CDF7 device test CDF7设备测试

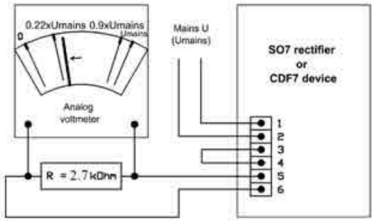

To test that the device is working correctly, connection should be as follows:
为了测试设备是否正确工作，应该按照如下方式进行连接：

- 1 and 2 connected to the mains
1和2连接至电源
- 3 and 4 connected together (shunt)
3和4连接在一起（分流）
- 5 and 6 connected to the brake winding
(or a resistor between 1 and 2.7 kΩ)
5和6连接在制动器绕组上（或者电阻在1-2.7 kΩ之间）

An analogue voltmeter should be used to display how the voltage changes at the resistor terminals.
应使用模拟电压表来显示电阻端电压的变化情况。

The device is working if when powered with the mains, the voltmeter is close to 90% of mains voltage (corresponding to the doping voltage for 500 ms) and then stabilises at 22% of mains voltage (holding voltage).
当由电源供电时，电压表接近电源电压的90%(对应500ms的励磁电压)，然后稳定在电源电压的22%(保持电压)，则设备工作。

Nidec

All for dreams

LEROY-SOMER™

Moteurs Leroy-Somer
Headquarter: Boulevard Marcellin Leroy - CS 10015
16915 ANGOULÊME Cedex 9

Limited company with capital of 65,800,512 €
RCS Angoulême 338 567 258

www.leroy-somer.com

Step	Discription	Detail
1	旋松 U 型盖板 M6 螺丝，取下盖板和密封垫 Loosen the M6 screws of the U-shaped cover plate and remove then	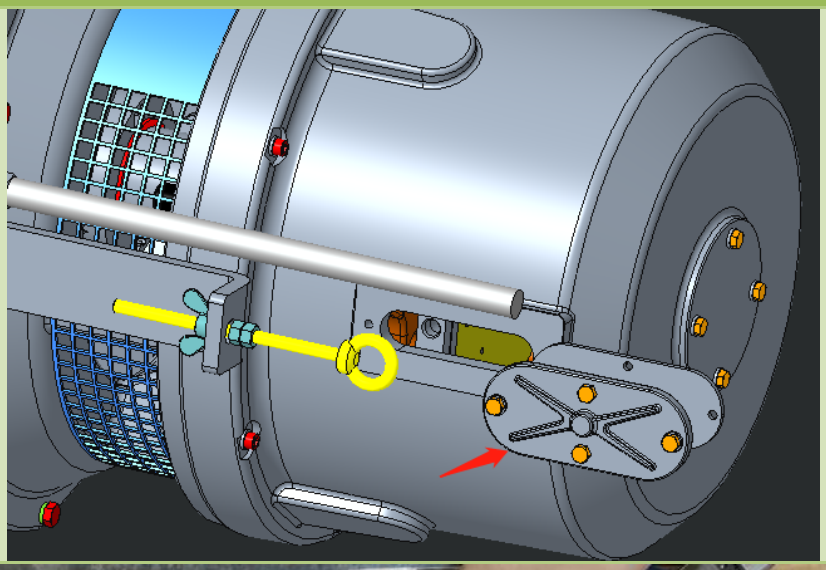
2	取下释放手柄，拧松蝶形螺母到拉杆尾部，将释放手柄从拉杆孔穿过 Remove the handle from motor, loosen the butterfly nut to the end of the tie rod, and pass the release handle through the tie rod hole	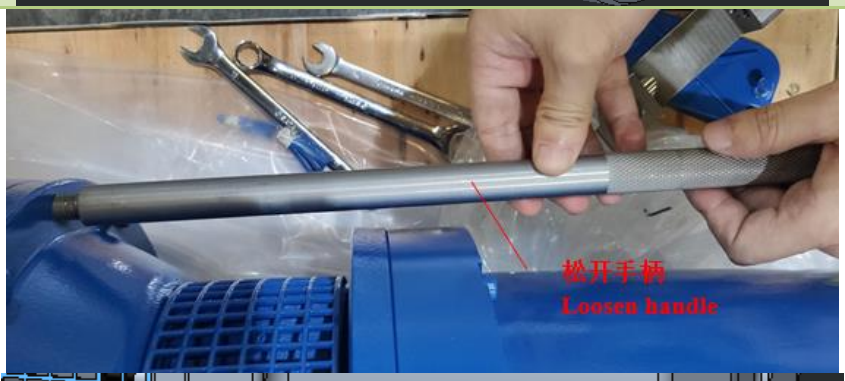 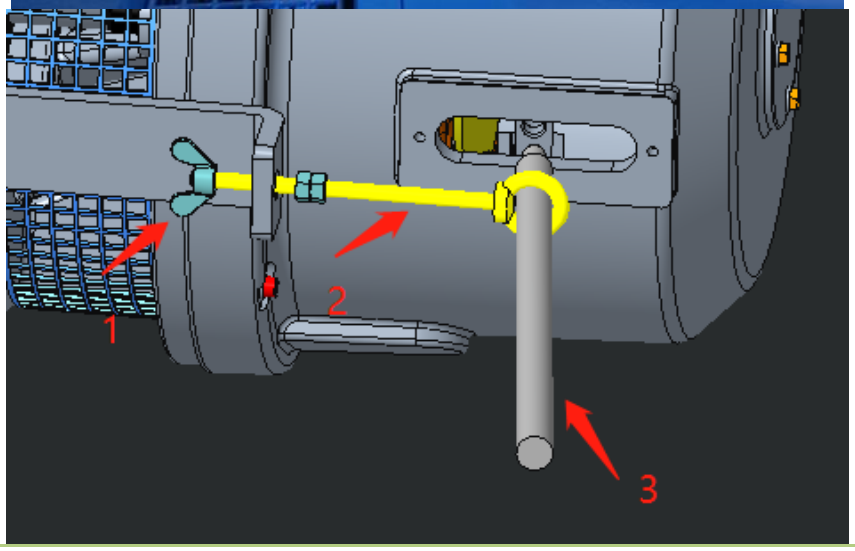

3	释放手柄拧进手柄孔。 **注意：确保手柄台阶面贴紧孔面。** Fix release handle into lever. **Note : the handle step surface must be tight to the hole surface.**	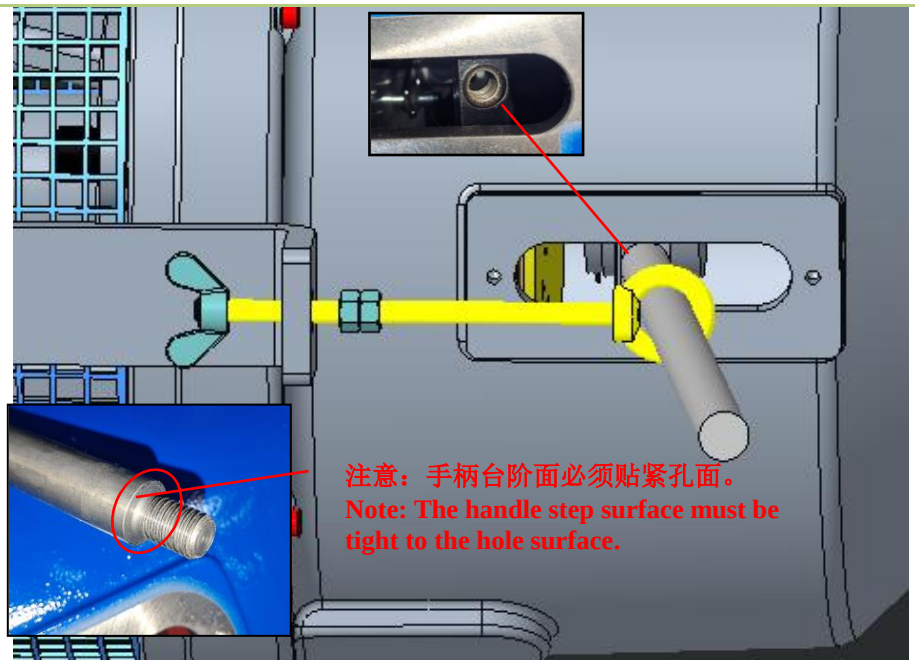 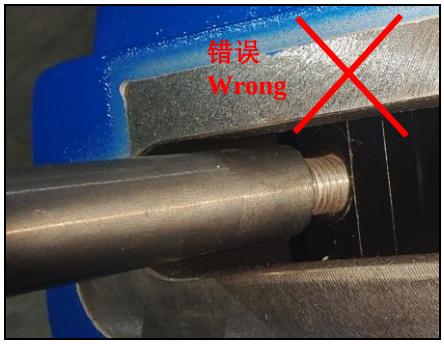 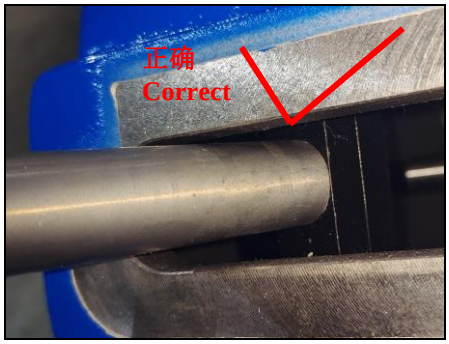
4	按图示方向压释放手柄，将拉杆推至限位螺母与限位板处，保持螺母与限位板完全贴合，对面蝶形螺母锁住。 **注意：限位螺母,限位板，蝶形螺母三者相互贴紧，此时制动器为完全释放状态，禁止继续对释放手柄用力，防止手柄变形失效。** Press and release the handle in the direction shown, Push the rod until the limit nut touch to the limit plate, keep the nut and the limit plate	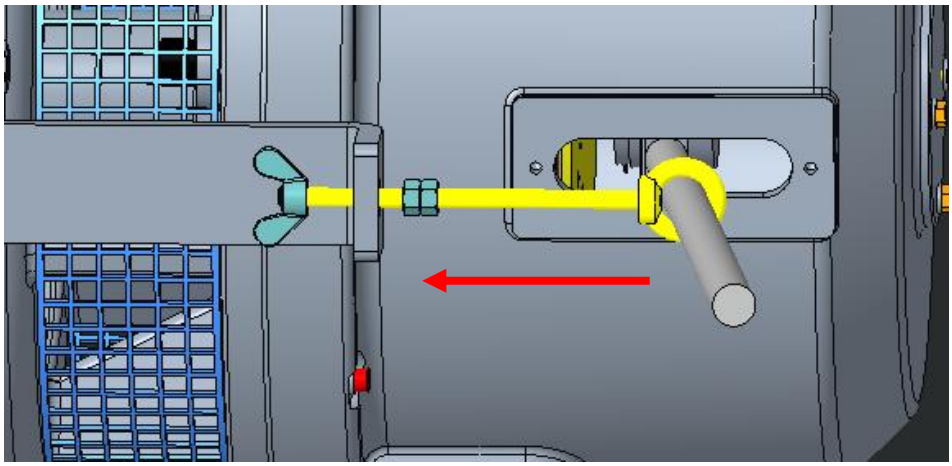

	completely fit, then locked the butterfly nut **Note: The limit nut, limit block and butterfly nut are tight to each other. At this time, the brake is fully released. It is forbidden to continue to exert force on the release handle to prevent the handle from deformation and failure.**	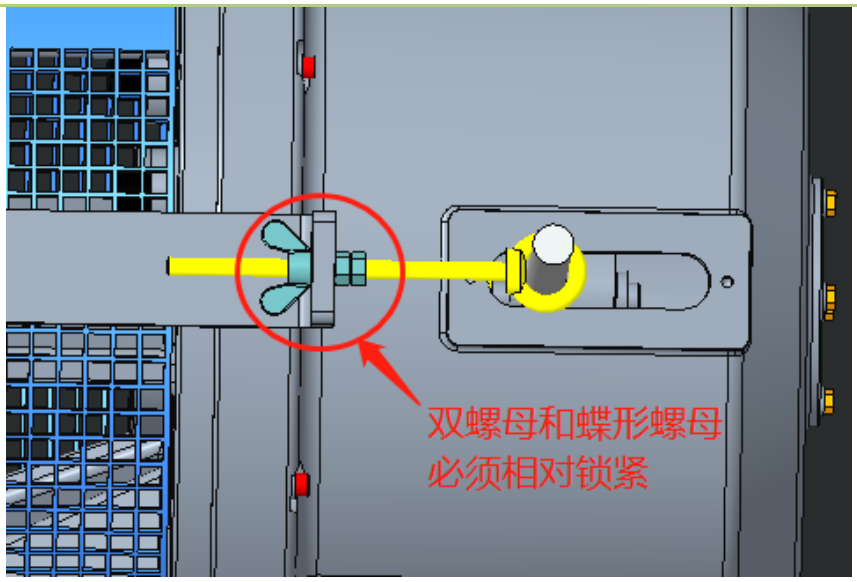
6	带盘车设计的电机，需要盘车时，打开后端密封罩,装盘车工具盘车。盘车后，装后端密封罩。 With wheel design motor,remove back sealing plate if motor should be rotate by hand，fix rotate tooling. Assemble sealing plate after manual rotating.	
7	在应用端满足防水的前提下，建议手动释放调试持续时间不超过 15 天。调试结束后，马上拆除释放装置并装上刹车密封罩。 If the application end is waterproof, it is recommended that the manual release and debugging	

	duration not exceed 15 days. After debugging, remove the release device and install the brake seal cover immediately.	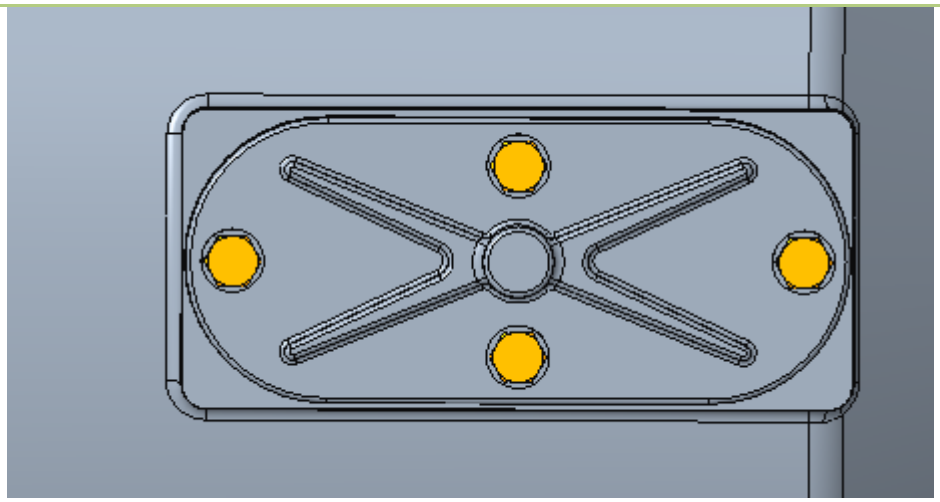
8	手柄和连接块放置于原来位置。 The handle and connecting block are placed in the original position.	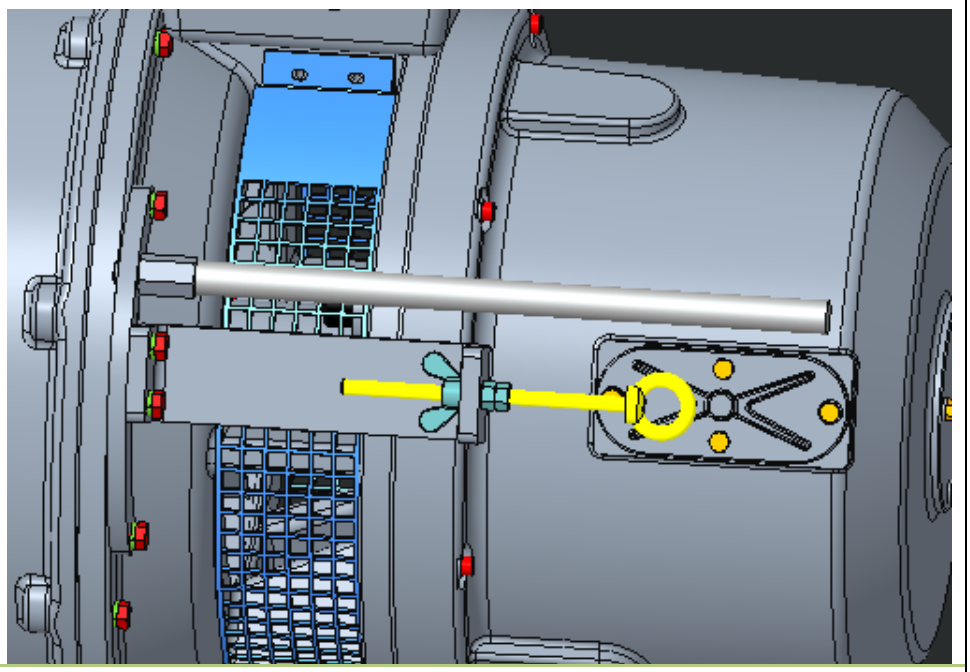
9	如图所示螺母为原厂调试好并锁紧，未经厂方同意，禁止拆除或移动。 The nuts as shown in the picture have been adjusted and locked by the original factory. It is forbidden to remove or move them without the consent of the factory.	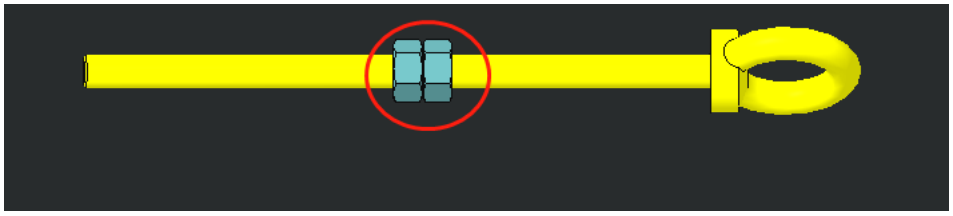

1 - 〖目的/Purpose〗： 该作业指导书指导作业者如何完成微动开关的装配 This work guide instructs the operator how to complete the assembly of the micro switch

2 - 〖作业员技能OPERATOR SKILLS〗： 了解熟悉马达装配工艺，严格按指导书操作 Understand and be familiar with the motor assembly process, strictly operate according to the instructions

3 - 〖准备/Preparation〗：

3-1．适用设备/Equipment： 无/Without

3-2．适用工具/Toolings：

五金工具等 **Hardware tools etc.**	万用表或测试灯 Multimeter or test light	塞尺 Feeler gauge

3-3．使用物料/Raw Material：

根据相关资料（物料清单等）备好物料和相关的装配辅助工具。
Prepare materials and related assembly AIDS according to relevant documents (bill of materials, etc.).

4 - 〖操作步骤/Operation Procedure〗

动作类型 Action type	装配前检查动作**Check actions before assembly** 装配动作**Assembly actions** 自检动作**Self-checking actions** 工艺注意点**Process attention points** **HSE**健康安全环境注意点**Pay attention to health and safety environment**	
	调节测试微动开关前，需要用塞尺圆周 3 处检查制动器气隙，合格后才能调整微动开关 Before adjusting the test microswitch, it is necessary to check the brake air gap at three places on the circumference with feeler gauge, and adjust the microswitch after passing	

仅供客户装配使用

24V 0.1A 的微动开关装配如下：

The 24V 0.1A microswitch is assembled as follows：

1. 取微动开关用两螺栓装配到磁轭上，扭力为1.2Nm
   The microswitch is assembled on the yoke with two bolts, and the torque is 1.2Nm
2. 取微动开关连接线接到开关上，连接顺序如图：黑、蓝、棕
   Connect the microswitch connection wire to the switch, and the connection sequence is shown as follows: black, blue, brown
3. 取M6调整螺杆旋入衔铁
   Take M6 adjusting screw and screw it into armature
4. 接通刹车电源和微动开关电源
   Switch on brake power and micro switch power

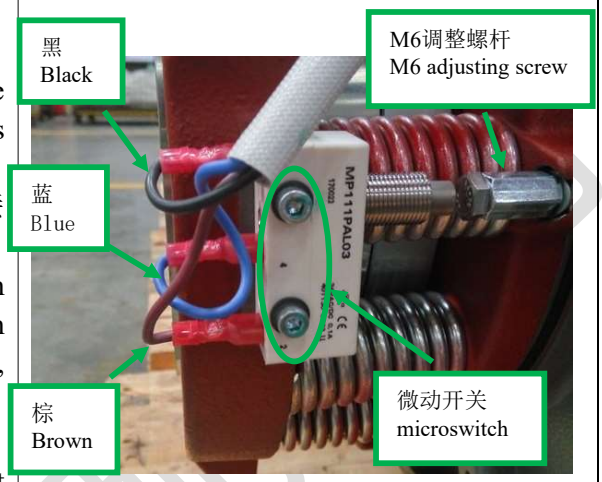

调整微动开关触发螺杆(FCPL60 是 M6)可用两种方式操作，一种是通过塞尺，一种是旋转螺杆圈数；测工作状态的微动开关用塞尺，测磨损状态的微动开关通过旋转螺杆圈数，

Adjusting the microswitch trigger screw (FCPL60 is M6) can be operated by two ways, one is through the feeler ruler, the other is rotating the number of turns of screw; Measuring the microswitch of working state with feeler ruler, measuring the microswitch of wear state by rotating the number of turns of screw

先介绍测工作状态的微动开关调节步骤：

First introduce the adjustment steps of the microswitch of measuring the working state:

1. 连接微动开关与测试开关电源（如图），接线顺序按颜色一一对应，测工作状态的接线在 T4（蓝）、T5（黑）、T6（棕）；用万用表，则是万用表调到电阻报警挡

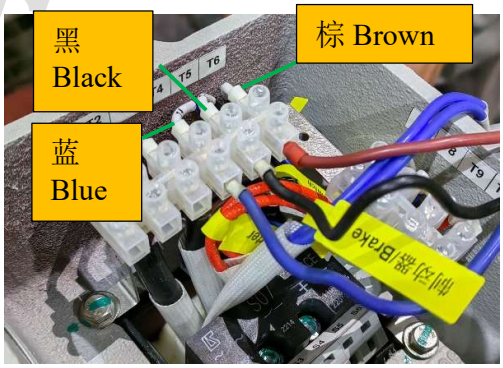

	Connect the microswitch to the test switch power supply (as shown in the figure), the wiring sequence corresponds to the color one by one, and the wiring for measuring the working status is T4 (blue), T5 (black), T6 (brown);With a multimeter, the multimeter is set to the resistance alarm gear 备注：螺杆未接触微动开关时左侧棕灯亮或者是万用表测得 T5（黑）、T6（棕）接通报警蜂鸣声 Note: When the screw does not touch the microswitch, the left brown light is on or the multimeter detects that T5 (black) and T6 (brown) are connected with the alarm buzzer	
G	2. 在微动开关两侧的气隙处，塞入塞尺，深约 25-30mm；FCPL60H 的塞尺厚度是 0. 3mm In the air gap on both sides of the micro switch, insert the feeler ruler, the depth is about 25-30mm;The gauge thickness of FCPL60H is 0.3mm 注：两塞尺距离要紧挨着弹簧，在微动开关两侧万用表搭在 T5（黑）、T4（蓝） Note: The two feelers must be close to the spring, on both sides of the microswitch, multimeter is contacted on T5 (black), T4 (blue)	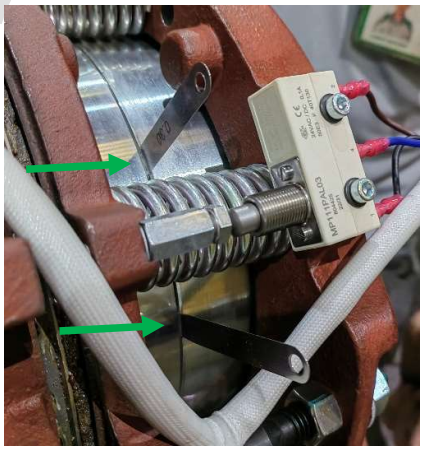
	3. 制动器通电气隙闭合，通过调节触发螺杆来触发微动开关，触发螺杆快要接触到微动开关时，缓慢逆时针旋转触发螺杆，一发现蓝灯亮时或者发现电阻档报警蜂鸣声，立即停止转动	

仅供客户装配使用

	The gap is closed when the brake is electrified, and the microswitch is triggered by adjusting the trigger screw. When the trigger screw is about to contact the microswitch, slowly rotate the trigger screw anticlockwise. As soon as the blue light is found or the resistance alarm buzzer is found, stop turning immediately	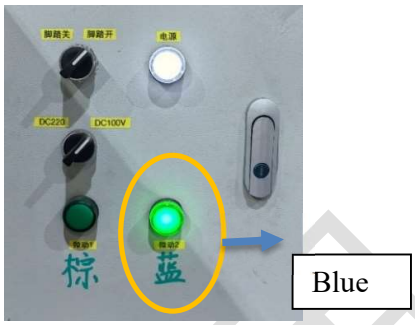
	4. 用一只扳手固定触发螺杆另一只扳手锁紧螺母 Use one wrench to secure the trigger screw and the other wrench to lock the nut	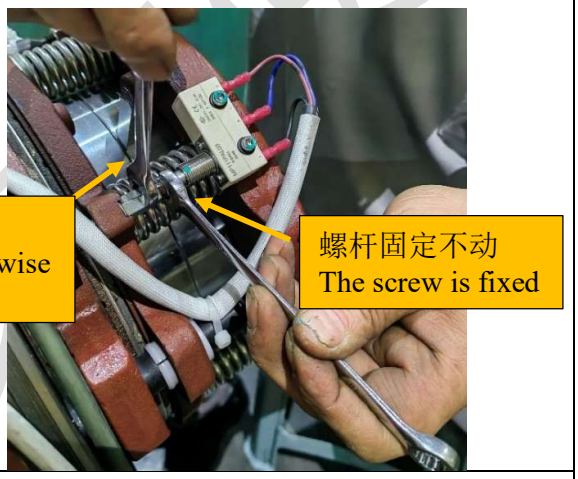
G	校验微动开关 Verify the microswitch： 1. 制动器断电，气隙打开后在同样位置塞入塞尺，FCPL60H—0. 2mm，；脚踩踏板气隙闭合，蓝灯亮，T5（黑）、T4（蓝）接通； After the brake is powered off and the air gap is opened, insert the feeler ruler in the same position, FCPL60H - 0.2mm; The air gap is closed when keeping the foot on the pedal, the blue light is on, and T5 (black) & T4 (blue) are connected; 2. 制动器断电，气隙打开后在同样位置塞入塞尺，FCPL60H—0. 4mm，脚踩踏板气隙闭合，蓝灯不亮，T5（黑）、T4（蓝）不接通。 After the brake is powered off and the air gap is opened, insert the feeler ruler in the same position, FCPL60H-0.4mm, when keeping the foot on the pedal, air gap is closed, the blue	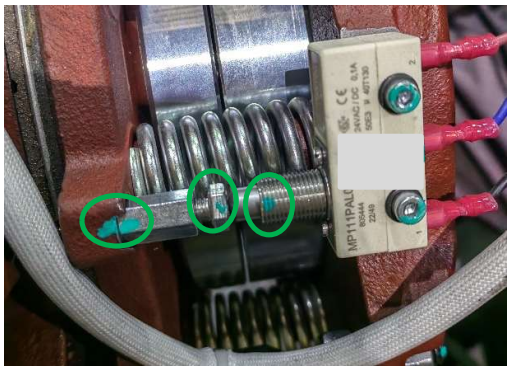

light is not on, and T5 (black) and T4 (blue) are not connected.

3. 并用油漆笔在螺母与机壳间、螺杆头部、微动开关上，这 3 处做好标记，如图
Mark the three places on between the nut and the housing, the head of the screw and the microswitch with the paint pen, as shown in the figure

备注 Note：
1. 螺杆接触到微动开关时，常闭端接通灯亮（T4 和 T5 接通）；也就是蓝灯亮
When the screw contacts the microswitch, the light of normally closed end is on(T4 and T5 are connected);That's the blue light

2. 若校验不合格的，需要重新调整微动开光螺杆
If the check is not qualified, it is necessary to readjust the microswitch screw

测磨损状态的微动开关通过旋转螺杆圈数来调整，调整步骤如下：
The microswitch for measuring wear status is adjusted by rotating the number of turns of screw turns. The adjustment steps are as follows:

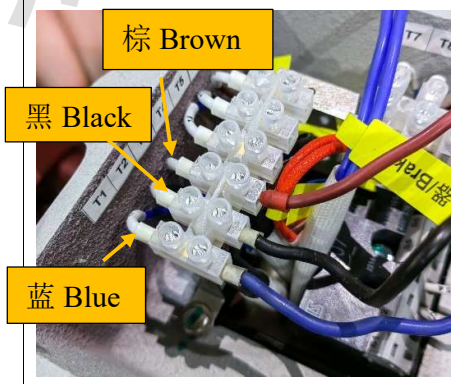

1. 连接微动开关与测试开关电源（如图），接线顺序按颜色一一对应，测磨损的接线在 T1（蓝）、T2（黑）、T3（棕）（螺杆未接触微动开关时左侧棕灯亮，T2（黑）、T3（棕）接通）
Connect the microswitch to the test switch power supply (as shown in the figure), the wiring sequence corresponds to the color one by one, and the wiring for measuring wear is to T1 (blue), T2 (black) and T3 (brown) (when the screw does not touch the microswitch, the left brown light is on, and T2 (black) & T3 (brown) are connected).

2. 制动器通电气隙闭合，使螺杆与微动开关接触，同时旋转螺杆，调整到测试开关

仅供客户装配使用

	的灯在蓝棕之间切换，或万用表测得 T1（蓝）、T2（黑），接通不接通间切换。 The gap is closed wthen the brake is electrified, so that the screw and the microswitch contact, rotate the screw at the same time, adjust the light of the test switch to switch between blue and brown, or the multimeter detects T1 (blue) and T2 (black), and change between whether the switch is switched on or not. 3. 以棕灯亮起时停止或万用表测得 T1（蓝）、T2（黑）不接通是停止，此时的螺杆位置为临界接触点 Stop when the brown light is on or if T1 (blue) and T2 (black) are not connected as measured by the multimeter, and the screw position is the critical contact point for now 4. 此时用记号笔在螺杆面和微动开关上做标记 Use a marker to mark on the screw surface and the microswitch	
G	5. 在此临界状态上调整螺杆，监测 Brake 磨损的微动开关螺杆再朝微动开关触点旋进 1.5 圈 Adjust the screw at this critical state, and screw the microswitch screw that monitors brake wear into the microswitch contact point 1.5 turns 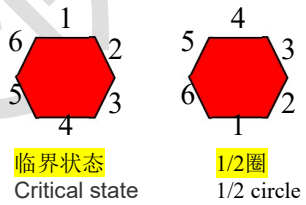 临界状态 Critical state 1/2圈 1/2 circle	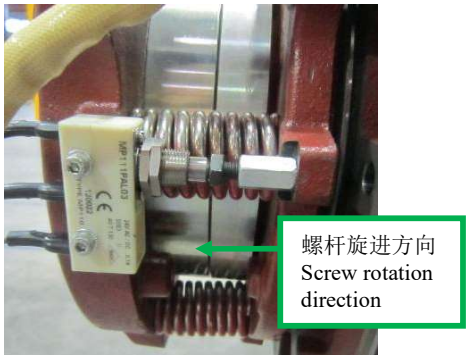

仅供官方装配使用

☐	6. 旋紧 M6 螺杆及螺母：用 1 把开口扳手保持螺杆不动，另一把开口扳手锁紧螺母 Tighten M6 screw and nut: Use one open wrench to hold the screw and another open wrench to lock the nut	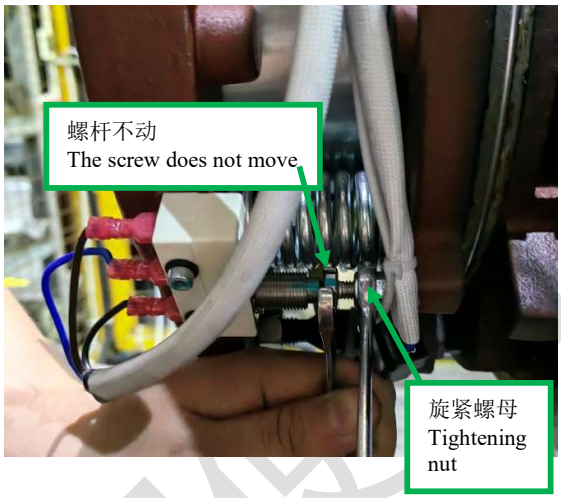
☐	7. 并用油漆笔在螺母与机壳间、螺杆头部、微动开关上，这 3 处做好标记，如图 Mark the three places on between the nut and the housing, the head of the screw and the microswitch with the paint pen, as shown in the figure	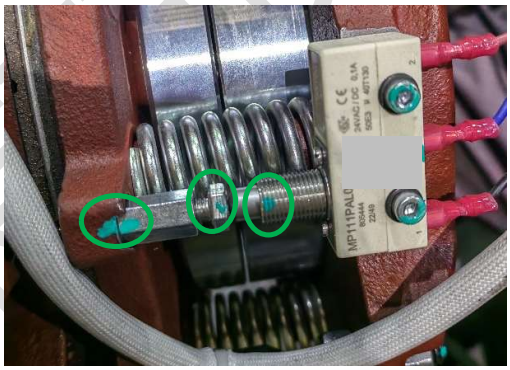
☐	8. 在微动开关侧边用油漆笔写上标记，可区分两微动开关的作用：字体朝内的标监测磨损圈数，例 FCPL60 的：$1\frac{1}{2}$ ；另一个字体朝外的无需标记 Write marks on the side of the microswitch with a paint pen to distinguish the role of the two microswitches; The fonts facing inward mark monitoring the number of wear turns, e.g. FCPL60：$1\frac{1}{2}$ ； Another font facing outward does not need to be marked	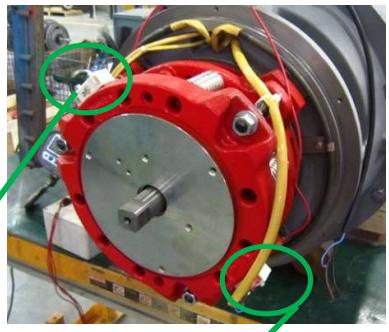 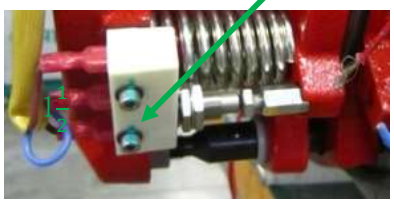

1	用 18 的套筒拆卸下制动器正面 M12 的六角法兰螺帽 Remove 3 hex flange nut M12 with sleeve 18.	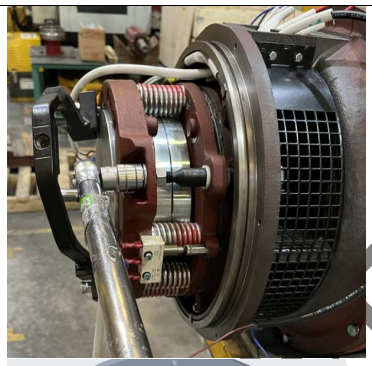 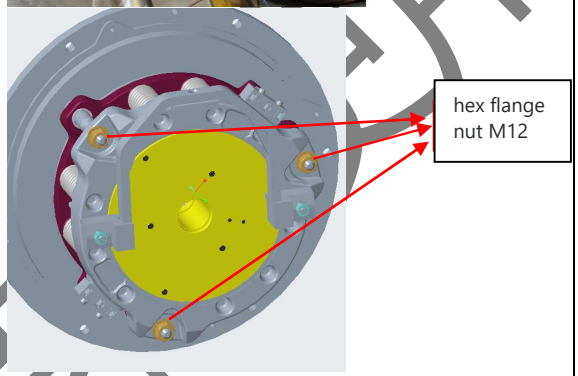
2	拉出磁轭及衔铁总成，3 个 M12 六角螺母旋出，取下 3 个 M12 六角螺母取下 Pull out the yoke and armature assembly, unscrew and remove 3 M12 hex nuts.	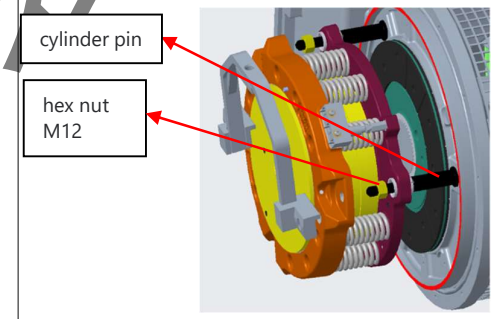
3	取下磁轭及衔铁总成，取下刹车盘 Remove yoke and armature assembly, remove brake disc.	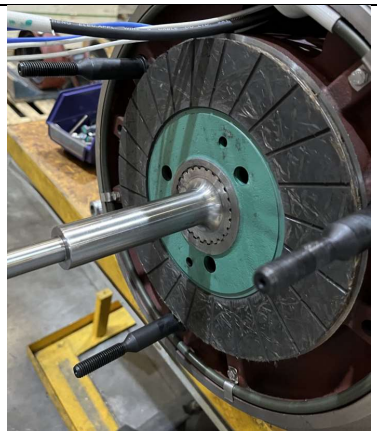

仅供客户使用

4	安装新刹车盘，制动盘的轮毂侧朝里组装到轴上,方向不可装反, Install the new brake disc, hub side of brake disc inward assemble on the shaft, the direction can not be installed in reverse.	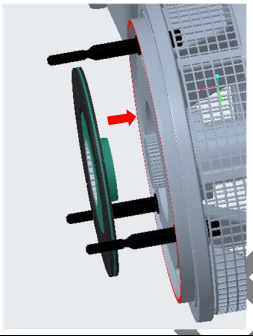
5	取拆下的磁轭及衔铁总成套入 3 个制动器装配圆柱销,此时只须先套入衔铁，并取 3 个 M12 六角螺母旋入 Take the removed magnetic yoke and armature assembly. First step, put armature into cylinder pin only then screw three M12 hex nuts on the cylinder pin.	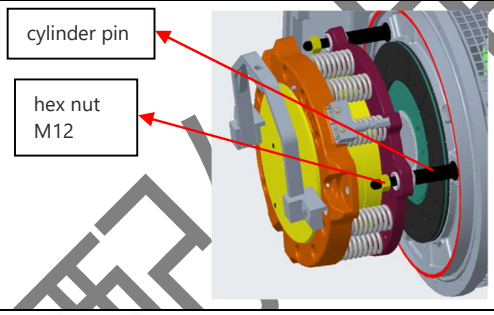
6	将磁轭及衔铁总成全部套入圆柱销，再取 3 个 M12 六角法兰螺帽旋入，装配位置如图示：两个六角法兰螺帽成对锁状态 Put whole yoke and armature assembly into the cylinder pin. then take three M12 hex flange nuts and screw them in. The assembly position is as shown in the figure: the two hex flange nuts are locked in pairs.	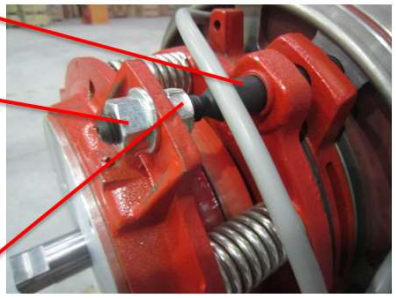
7	取两把扭力扳手，扭力调到 58N.m，旋动六角法兰螺帽和六角螺母，调整磁轭与衔铁气隙 0.5-0.6mm（塞规 0.5mm 进，0.6mm 不进），锁紧，锁紧后在圆周均等 3 处确认，塞规 0.5mm 进，0.6mm 不进。 Take two torque wrenches, set torque at 58N.m. Rotate hex flange nut and hex nut, adjust the air gap between magnetic yoke and armature 0.5-0.6mm (plug gauge 0.5mm can be inserted, 0.6mm can't be inserted), after adjustment, lock the nuts then recheck airgap in three equal places around the circumference, plug gauge 0.5mm can be inserted, 0.6mm can't be inserted. 注：制动器最大气隙为 1.5mm，建议磨损到 1.2mm 时调整气隙，当制动盘磨损，调整 2 次气隙后需要更换制动盘。	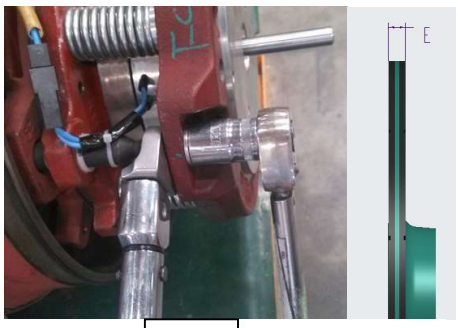 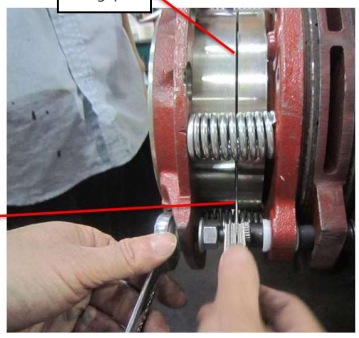

仅供内部使用

	Note: the maximum air gap of the brake is 1.5 mm, and suggest to adjust the air gap of the brake when the air gap is 1.2mm; When the brake disc is worn, the brake disc needs to be replaced after adjusting air gap 2 times.	

仅供客户装配使用

Appendix4.附录 4.齿轮箱维护手册 Gearbox maintence manual

齿轮箱维护手册

JCUD110TA
升降单元齿轮箱
使用维护手册
Lifting Unit Gearbox
Operation & Maintenance Manual

1. 安全警告 Safety Warning

本部分涉及的内容必须高度重视，遵守本规范可在正常的工作程序中避免人身事故，保证设备安全。

The contents involved in this part must be paid great attention. Compliance with this specification can avoid personal accidents in normal work procedures and ensure equipment safety.

- 凡进行装配、拆解，启动设备时，操作以及维修齿轮箱的人员（检查、服务和维修）必须阅读和理解本手册，上述人员应对本手册提供的信息进行书面确认。
- When assembling, disassembling and starting the equipment, the personnel who operate and maintain the gearbox (inspection, service and maintenance) must read and understand this manual, and the above personnel shall confirm the information provided in this manual in writing.
- 必须避免任何危害劳动者人身安全和有损齿轮箱功能的行为。
- Any behavior that endangers the personal safety of workers and damages the function of the gearbox must be avoided.
- 船东有义务保证操作现场不出现没有资质的劳动者。
- The shipowner is obliged to ensure that there are no unqualified workers on the operation site.
- 操作者有义务随时报告危及齿轮箱安全的任何变化。
- The operator is obliged to report any change that endangers the safety of the gearbox at any time.
- 不允许任何影响到齿轮箱安全的未经授权的重装和改装行为。
- Any unauthorized reassembly or refitting that may affect the safety of the gearbox is not allowed.
- 机器运转之前、维修后必须确保现场存在所有的安全保护装置。
- Before machine operation and after maintenance, all safety protection devices must be available on site.
- 在任何情况下，齿轮箱的运转必须保证安全并有事故预防措施。
- In any case, the operation of gearbox must be safe and accident prevention measures must be taken.
- 应具有防止操作者由于疏忽及旋转部件接触的措施。
- Measures shall be taken to prevent the operator from negligence and contact with rotating parts.

- 由于齿轮齿条啮合传动时，接触应力大，为保证齿轮齿条正常的啮合运动，必须保证齿轮齿条之间有适时喷脂机构，且对齿轮齿条适时喷脂。特别的，齿轮箱装配后工作前，齿轮与齿条之间必须加注润滑脂，使之正常啮合，防止异常磨损。
- Because the contact stress is large when the gear and rack are engaged and driven, in order to ensure the normal engaging movement of the gear and rack, it is necessary to ensure that there is a timely grease spraying mechanism between the gear and rack, and the gear and rack are sprayed with grease in a timely manner. In particular, after the gearbox is assembled and before working, the gear and rack must be filled with lubricating grease to ensure normal engagement and prevent abnormal wear.
- 安装时注意输出齿轮两侧轴承座调平，保证轴承中心连线错位量不得超过 0.5mm。
- During installation, pay attention to the leveling of bearing blocks on both sides of the output gear, and ensure that the misalignment of the connecting line of the bearing center does not exceed 0.5mm.

2. 总论 General

2.1 遵守本文件将使齿轮箱故障最小化，并确保齿轮箱无故障运行。

Compliance with this document will minimize gearbox failures and ensure trouble free operation of the gearbox.

2.2 任何操作或从事此方面工作的人员均应充分阅读理解本文件，如果没有遵守本文件之规定而造成的设备损失、人身安全等事故，我司不承担任何责任。

Any person who operates or works in this field shall fully read and understand this document. Our company will not bear any responsibility for equipment loss, personal safety and other accidents caused by failure to comply with the provisions of this document.

2.3 我们保留技术更改未在本文件中体现的权利，这种更改时为了更好的改善齿轮箱性能。

We reserve the right to make technical changes that are not reflected in this document to better improve the performance of the gearbox.

3. 齿轮箱介绍 Introduction to Gearbox

齿轮箱设计实现了海洋平台的提升和下降。本文件详细介绍了 110 吨海洋平台升降齿轮箱的安装、操作和维修。

The gearbox design realizes the lifting and lowering of the offshore platform. This document details the installation, operation and maintenance of 265-ton offshore platform lifting gear box.

齿轮箱设计遵循 ABS Rules for Building and Classing Mobile Offshore Units 2023, ISO6336(2006)齿轮强度计算和 ISO281 增补 4 轴承计算等相关规范和标准。

The design of the gearbox shall comply with CCS Rules for Classification of Mobile Offshore Units - 2020, ISO6336 (2006) Calculation of Gear Strength, ISO281 Supplement 4 Bearing Calculation and other relevant specifications & standards.

4. 齿轮箱详述 Details of Gearbox

4.1 齿轮箱系统总述 General Description of Gearbox System

齿轮箱采用四级行星传动设计，可实现输出齿轮正反转，通过与齿条啮合传动，从而完成升降平台的提升和下降。

The gearbox is designed with five-stage parallel stage plus two-stage planetary drive, which can realize the forward and reverse rotation of the output gear. Through engaging with the rack, the lifting & lowering of the lifting platform can be completed.

安装电动机时，在保证电动机与齿轮箱轴承座之间 O 型圈的正确安装后，对准安装止口，按要求拧紧螺栓即可，如图 1 所示。

When installing the electric motor, after ensuring the correct installation of the O-ring between the motor and the gearbox bearing block, align the fixing mouth and tighten the bolts as required. As shown in Fig. 1.

齿轮箱主箱体采用油润滑，后轴承座轴承采用脂润滑。

The main box of the gearbox is lubricated with oil, and the rear bearing block bearing is lubricated with grease.

安装时位置调整可能引起透气塞和放油塞更换，但需保证透气塞必须在齿轮箱顶部，放油塞在齿轮箱底部。

The position adjustment during installation may cause the replacement of the vent plug and oil drain plug, but it is necessary to ensure that the vent plug must be at the top of the gearbox and the oil drain plug must be at the bottom of the gearbox.

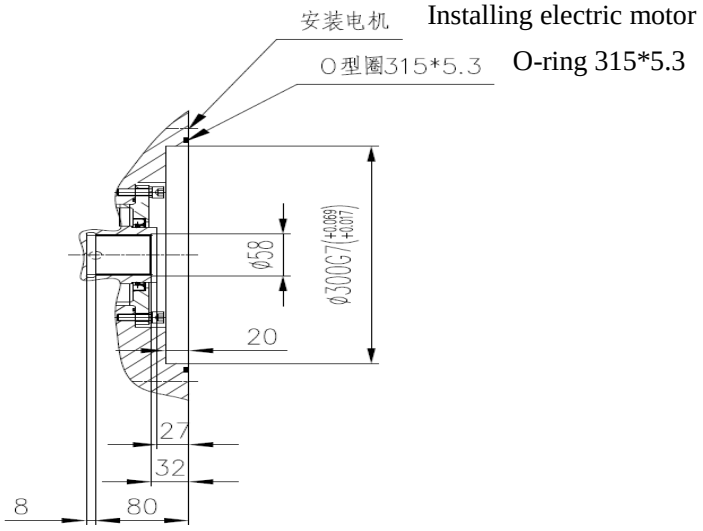

图 1 齿轮箱输入端安装尺寸

Fig. 1 Installation Dimension of Gearbox Input End

4.2 齿轮箱基本参数（详见表 1）

Basic Parameters of Gearbox (See Table 1 for details)

下表表示齿轮箱设计基本参数。

The following table shows the basic design parameters of the gearbox

表 1 齿轮箱参数

Table 1 Gearbox Parameters

项目 Items	说明 Description	备注 Remarks
齿轮箱型号 Gearbox Model	JCUD110TA	
速比 Speed Ratio	2549	
额定升降速度 Rated Lifting Speed	0.6m/min	
额定升降提升力 Rated Lifting Force	110Tone	2200 小时 2200 hours
预压升降提升力 Pre-pressing Lifting Force	165Tone	400 小时 400 hours
风暴保持提升力 Holding Lifting Force	220 Tone	

in Storm		
输出齿轮模数 Output Gear Module	56mm	
输出齿轮齿数 Number of Output Gear Teeth	9	
输出齿轮压力角 Pressure Angle of Output Gear	25°	
输出齿轮齿宽 Output Gear Tooth Width	128mm	

5. 润滑和冷却要求

Lubrication and Cooling Requirements

润滑要求详见表 2

See Table 2 for lubrication requirements

表 2 润滑要求

Table 2 Lubrication Requirements

参数 Parameters	推荐值 Recommended Value
参考润滑油 Reference lubricating oil	ISO VG220/320（合成齿轮箱油） ISO VG220/320 (Synthetic gearbox oil)
注油量（单台） Oil-filling quantity (Single unit)	约 53L Approx. 53L
后座轴承参考润滑脂 Reference grease for rear seat bearing	Mobil SHC GREASE 460WT （后座调心滚子轴承） (Rear seat self-aligning roller bearing)
齿轮齿条参考润滑脂 Reference grease for gear rack	美孚 SHC1000Special（或与此品质相同的润滑脂） Mobil SHC1000Special (or grease of the same quality)
注脂量（单台） Grease-filling quantity (Single unit)	约 3L（后座调心滚子轴承） Approx. 3L (Rear seat self-aligning roller bearing)

考虑到正确加注齿轮箱油位后由于齿轮箱冷却、润滑系统运行造成油位下降，必须在启动或空转时通过油镜注意观察油位变化。齿轮箱主箱采用浸油润滑，后轴承座轴承采用脂润滑。齿轮箱冷却主要依靠润滑油及箱体的表面。

Considering that the oil level drops due to the cooling of the gearbox and the operation of the lubrication system after the oil level of the gearbox is correctly filled, the oil level change must be observed through the sight glass during startup or idling. The main gearbox is lubricated with oil, and the rear bearing block bearing is lubricated with grease. The cooling of the gearbox mainly depends on the lubricating oil and the surface of the gearbox.

6. 使用环境及条件

Operating Environment and Conditions

齿轮箱设计时采用的环境数据如表 3 所示

The environmental data used in the design of the gearbox is shown in Table 3

表 3 环境数据尺寸和质量

Table 3 Size and Quality of Environmental Data

项目 Items	范围 Range	备注 Remarks
环境温度 Ambient temperature	0℃~50℃	
绝对大气压 Absolute atmospheric pressure	0.1MPa	
海水温度 Sea water temperature	2℃~36℃	
相对湿度 Relative humidity	90%（最大） 90%（Max.）	

7. 尺寸和质量

Size and Quality

7.1 齿轮箱外形尺寸和质量

Overall Dimensions and Quality of Gearbox

主要的齿轮箱尺寸和质量如表 4 所示。

The main sizes and quality of gearbox are shown in Table 4.

表 4 齿轮箱尺寸和质量

Table 4 Sizes and Quality of Gearbox

参数 Parameters	单位 Unit	数值 Numerical Value
齿轮箱长度 Gearbox length	mm	~1300
齿轮箱宽度 Gearbox width	mm	826
齿轮箱高度 Gearbox height	mm	~950
齿轮箱直径 Gearbox diameter	mm	Φ826
齿轮箱重量 Gearbox weight	Kg	约 2110 Approx. 2110

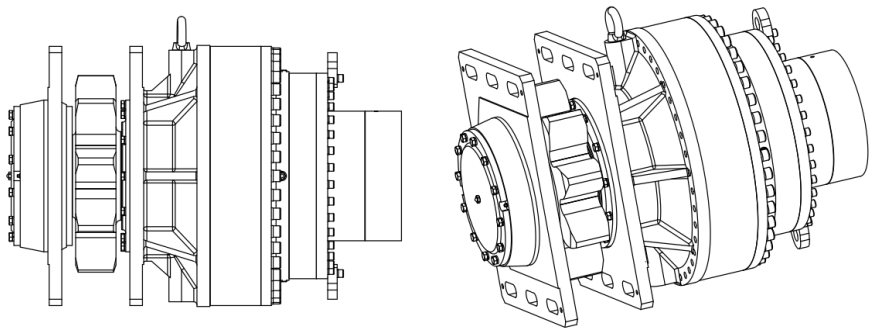

图 2 齿轮箱外形

Fig. 2 Outline Drawing of Gearbox

7.2 齿轮箱起吊

Lifting Gearbox

请尽量使用至少 5 吨承载力的吊具起吊，该齿轮箱起吊方式如图 3 所示，其中左侧的起吊位置设置在后箱体上，单独的起吊在前箱体上。

Please use slings with a bearing capacity of at least 5 tons to lift as much as possible. Before use, confirm whether the slings can rotate flexibly. The lifting method of the gearbox is shown in Fig. 3. The lifting position on the left side are set on the rear box, and the single lifting position is set on the front box.

齿轮箱重心位置详见外形图。

See the outline drawing for the gravity center position of the gearbox.

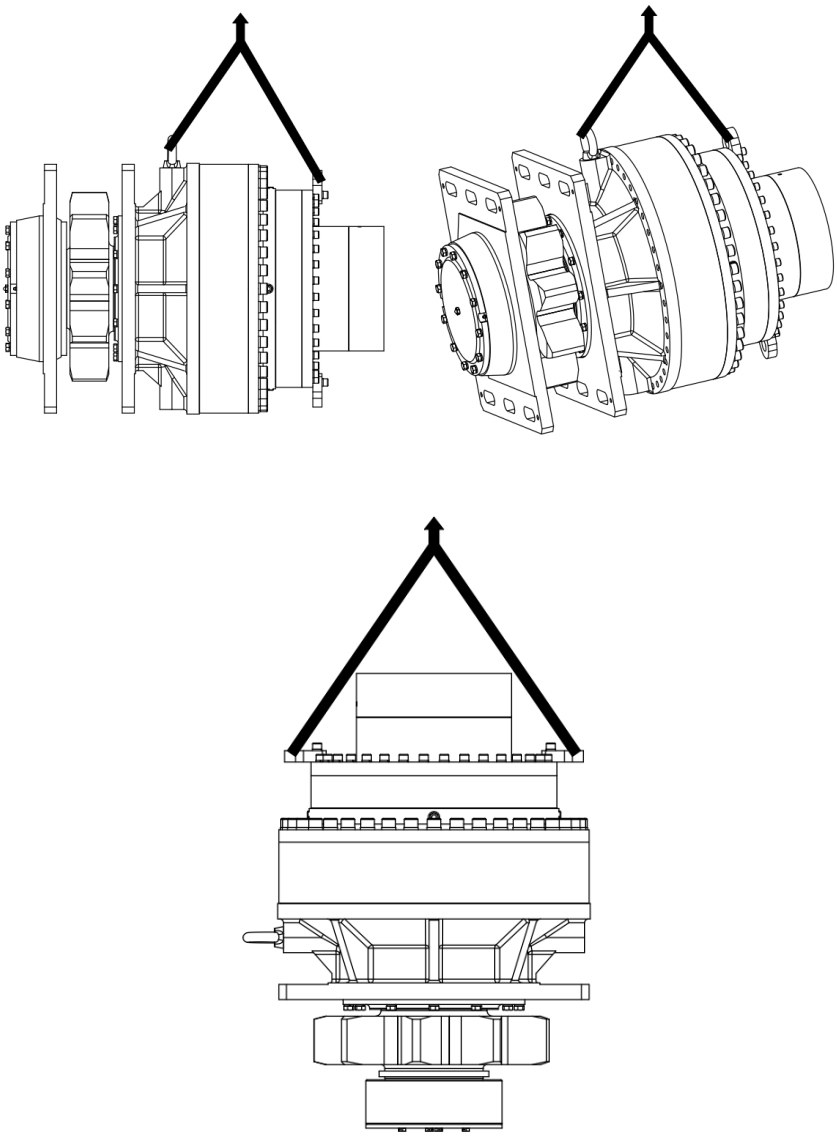

图 3 齿轮箱起吊图

Fig. 3. Lifting Drawing of Gearbox

8. 后支撑轴承座安装及拆卸

Installation and Disassembly of Rear Support bearing block

8.1 安装后支撑轴承座

Installation of Rear Support bearing block

1）安装前准备

Preparation before installation

- 未安装零件应妥善摆放在工位器具上，严禁乱堆放，防止磕碰划伤零件，并确认零件是否齐全；
- The parts that are not installed shall be properly placed on the work station apparatus. It is strictly prohibited to stack them randomly to prevent them from being bumped and scratched, and confirm whether the parts are complete;
- 相关零件在装配前必须清理和清洗干净，不得有毛刺，飞边，氧化皮，锈蚀，油污，着色剂和灰尘等；
- The relevant parts must be washed and cleaned up before assembly, without burr, flash, oxide skin, rust, oil stain, colorant and dust, etc.;
- 确保现场均提供有轴承安装工具：柴油、铜锤、润滑脂；
- Ensure that bearing installation tools are available on site: diesel, copper hammer and grease;

2）后支撑组件安装：如图 4 所示

Installation of rear support assembly: As shown in Fig. 4

- 用千斤顶托住安装位的齿轮箱，准备安装轴承后支撑轴承座；
- Support the gearbox in the installation position with a jack, and prepare to support the bearing block after installing the bearing;
- 取出挡油透盖及相应油封，请勿用指甲及硬物摩擦油封唇口端部，在唇口之间填充矿物油型锂基润滑脂对唇口部润滑，将密封唇口朝向尾部，保持水平随盖子一起均匀加压安装到轴上；
- Take out the oil baffle cap and the corresponding oil seal. Do not rub the end of the oil seal lip with nails and hard objects. Fill mineral oil lithium-base grease between the lips to lubricate the lip. Face the seal lip to the tail, and keep it horizontal and install it on the shaft with the cover under uniform pressure;
- 取出后支撑轴承，轴承原包装防锈良好者可拆除包装层，立即在清洁状态下进行配装，否则应防尘保护或用柴油清洗后才能进行装配；

- Take out the rear support bearing. If the original package of the bearing has good rust resistance, remove the packaging layer and immediately assemble it in a clean state. Otherwise, it should be protected against dust or cleaned with diesel before assembly;
- 轴承型号为 24048CA/C3W33,装配时，应将轴承的打印端朝外，并采用铜锤敲击法进行安装，只允许在座圈上施力，不允许让滚动体或保持架承受轴向力，安装在轴上后轴承内圈与轴肩应靠紧，间隙不得大于 0.1mm,安装轴端挡板；

- The bearing model is 24048CA/C3W33. During assembly, the printed end of the bearing shall be outward, and the copper hammer tapping method shall be used for installation. Only the force is allowed to be applied on the race, and the rolling element or retainer is not allowed to bear the axial force. After installation on the shaft, the inner ring of the bearing shall be close to the shaft shoulder, and the clearance shall not be greater than 0.1mm. The shaft end baffle shall be installed;
- 后支撑轴承座轴承孔、隔套擦干净，后支撑轴承座与轴承外圈配合为 φ360H7，装配后支撑轴承座；
- The bearing hole of the rear support bearing block shall be wiped clean, and the fit between the rear support bearing block and the bearing outer ring is φ360H7: and assemble the rear support bearing block.
- 组装其余后支撑组件，轴端挡板和过渡圆环，其中过渡圆环配制祥见 8.3。
- Assemble the remaining rear support components, shaft end baffle, and. The configuration of transition ring is shown in 8.3.
- 在确认零件的清洁度和无脏东西、杂质进入到轴承和油封内后，可安装最后的端盖零件，按 218N.m 拧紧力矩拧紧盖板处的螺栓。
- After confirming that the parts are clean and free of dirt and impurities entering the bearing and oil seal, the final end cover parts can be installed, and the bolts at the cover plate can be tightened with 218N. m tightening torque.

  注意后轴承上有 12 个 M16x190 的螺栓，它将后轴承座与挡油板连接起来。

  It is noted that there are 12 M16x190 bolts on the rear bearing, which connect the rear bearing block to the oil baffle.

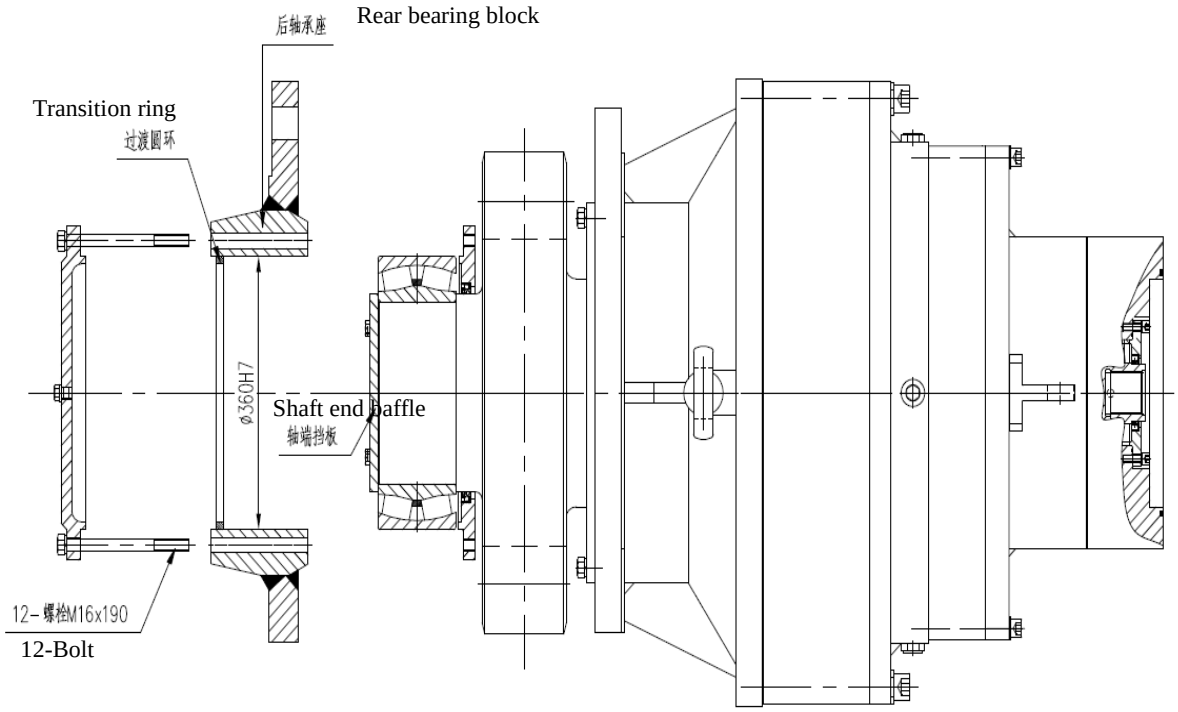

图 4 后轴承座安装示意

Fig.4 Installation Diagram of Rear Flange

3）后支撑轴承座与挡油板具体连接步骤：如图 5 所示

Specific connection steps of rear support bearing block and oil baffle plate is shown in Fig.5

- 挡油板已预先安装于输出轴轴肩位置，此时将两个等长双头螺柱（GB/T 901-1988，M16x200）分别拧入挡油板其中两个螺纹孔内（十二个螺纹孔取其中对称两处），然后将后支撑轴承座上对应的螺栓通孔对准两处双头螺柱套入，直至后支撑轴承座与挡油板配合完毕，随后将后支撑轴承座、后端盖与挡油板剩余的十个孔位通过 10 个螺栓（GB/T 5782-2016，M16x190）连接起来，再将两个等长双头螺柱拧出，然后将剩余的两个 M16x190 的螺栓拧入挡油板剩余的两个孔位。
- The oil baffle plate has been pre-installed on the output shaft shoulder. And meanwhile, screw two(GB/T 901-1988, M16x200) into two threaded holes of the oil baffle plate (take two symmetrical ones out of the six threaded holes), Then align the corresponding bolt through-hole on the rear support bearing block with the two studs and insert them until the rear support bearing block and the oil baffle plate are matched. Then connect the remaining 10 hole positions of the rear support bearing block, rear end cover and oil baffle plate through 10 bolts (GB/T 5782-2016，M16x190), screw out two equal-length studs, and then screw the remaining two M16x190 bolts into the remaining two hole positions of the oil baffle plate.

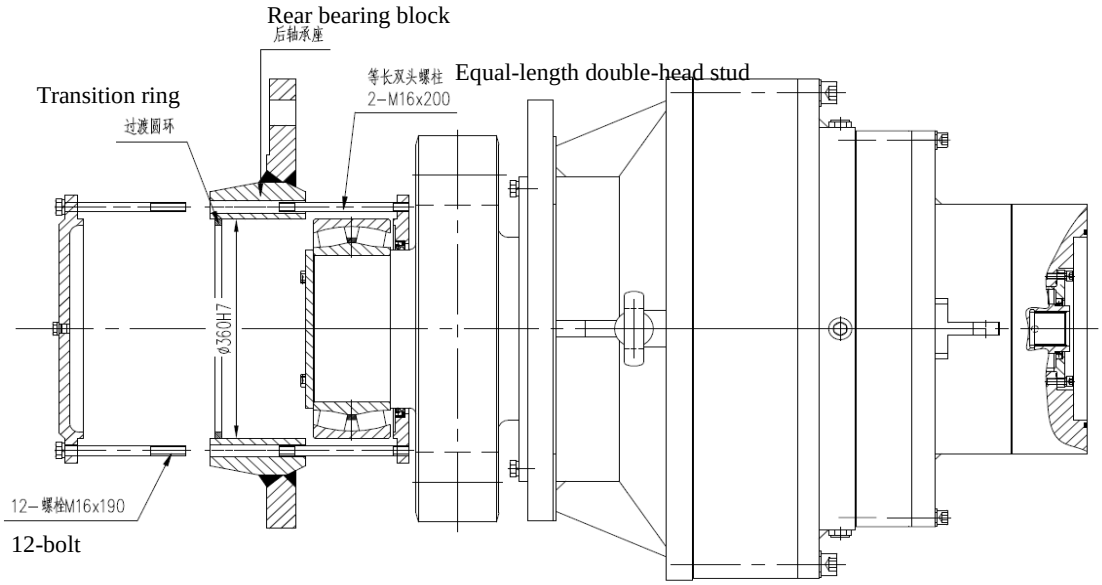

图 5 后轴承座与挡油板连接示意

Fig.5 Schematic Diagram of Connection between Rear bearing block and Oil Baffler

8.2 拆卸后支撑轴承座

Disassembling the rear support bearing block

拆卸后支撑轴承座注意事项：

Cautions for disassembling the rear seat:

拆下零件端盖端面螺栓，依次拆下端盖，后轴承座、轴承及挡油板和油封（将拆下的零件放在清洁干净的地方，防止杂质、脏东西进入到轴承、油封内，务必保证零件的清洁度）。

Remove the end face bolt of part end cover, and then disassemble the end cover, rear bearing block, bearing, oil baffle plate and oil seal in turn (place the removed parts in a clean place to prevent impurities and dirt from entering the bearing and oil seal, and ensure the cleanliness of the parts).

8.3 齿轮箱后支撑轴承座调整垫安装说明

Installation instructions on rear seat adjusting pad of gearbox

过渡圆环配制说明：如图 6 所示。

Preparation description of transition ring: as shown in Fig. 6.

a、测量轴承端面到轴承座端面值 t（注：通过专用工装对轴承 24048 压紧后测量）,测量端盖凸台高度 b。

Measure the value t from the end face of the bearing to the end face of the bearing block（Note：Measure bearing 24048 after compaction by special tooling）, and measure the height b of the end cover boss.

b、计算过渡套环的厚度 a,为保证调心轴承轴向游隙 0.15~0.25mm,计算公式如下：

a=t-b-（0.15~0.25）,t 值可能有 2mm 波动；

Calculate the thickness a of the transition ring. To ensure the axial clearance of the self-aligning bearing is 0 .15~0.25mm, the calculation formula is shown as follows:

a=t-b-（0.15~0.25）,t value may fluctuate by 2mm;

c、现场机加工过渡套环的厚度至 t-b-（0.15~0.25）(mm);

The thickness of transition ring machined on site to t-b-（0.15~0.25） (mm);

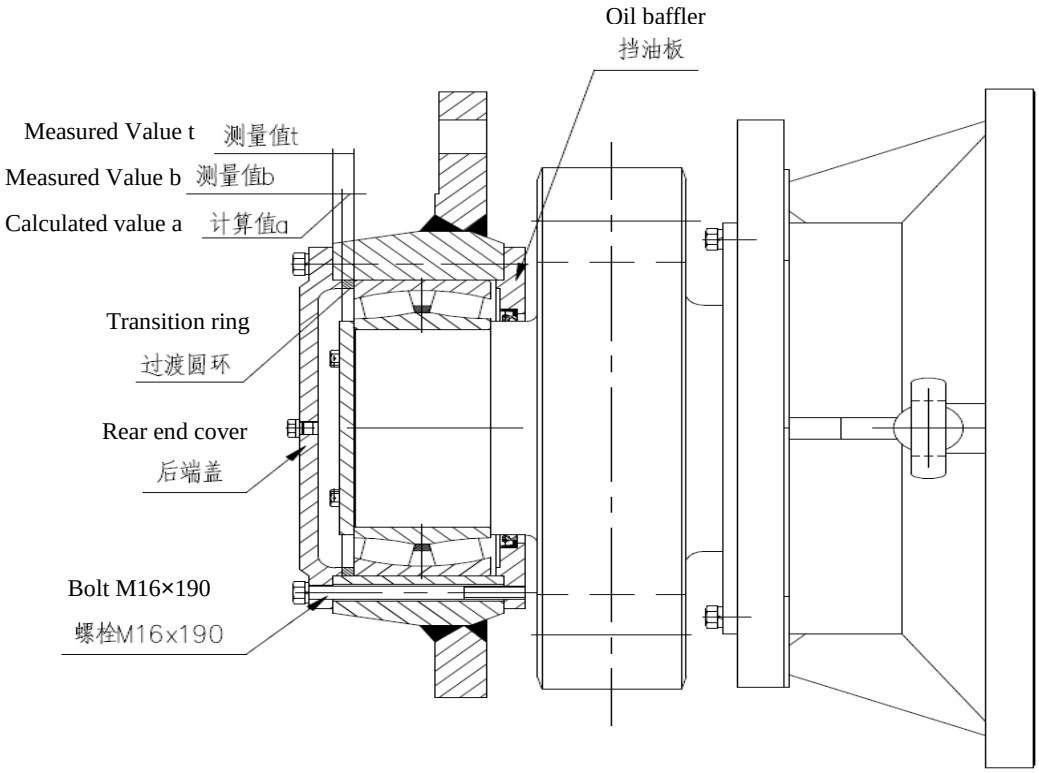

图 6 后轴承座垫片修配图

Fig. 6 Rear Bearing Block Gasket Repair Diagram

9. 油位监测

Oil level monitoring

齿轮箱在静止状态下，通过油镜观察，如齿轮箱润滑油油位低于油镜可视位置，齿

轮箱需加润滑油，齿轮箱油位须处于油镜中部。

When the gearbox is in the static condition, observe it through the sight glass. If the lubricating oil level of the gearbox is lower than the visible position of the sight glass, add

lubricating oil to the gearbox, and the oil level of the gearbox must be in the middle of the sight glass.

10. 齿轮箱加油

Oil Filling of Gearbox

通过齿轮箱箱体透气塞位置（M22X1.5)为齿轮箱加油，齿轮箱油位须处于油镜中部。

润滑点示意图：除尾部轴承采用脂润滑外，齿轮箱主箱体内部采用浸油润滑。

Fill oil into the gearbox through the position of the vent plug (M22X1.5) of the gearbox middle body, and the oil level of gearbox must be in the middle of the oil view glass.

Schematic diagram of lubrication points: except that the backseat bearing is lubricated with grease, the main box of the gearbox is lubricated with oil.

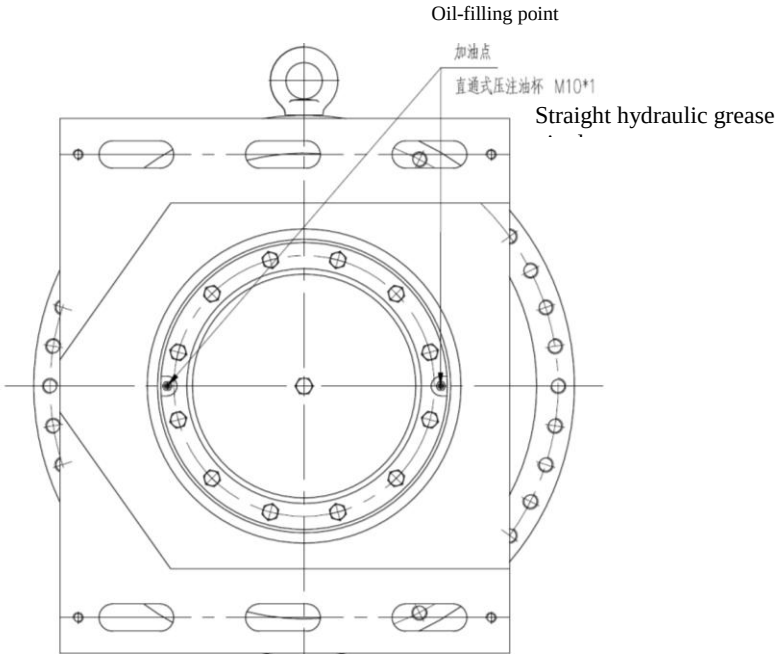

图 7 齿轮箱尾部后轴承润滑脂加注点

Fig. 7 Grease filling point for rear bearing of gearbox tail

11. 通风设备

Ventilation facilities

为了防止箱体压力，齿轮箱安装了透气塞，使用维护人员应该注意并且经常检查其是否堵塞，并且要求定期清洁。

In order to prevent pressure of box body, the gearbox is installed with vent plug, the use and maintenance personnel should pay attention to and often check whether it is blocked, and require regular cleaning.

12. 齿轮箱运输

Transportation of gearbox

1)齿轮箱运输、存放时不允许直接放在车间水泥地面上，应放置在木制支架上或平滑干燥的基础上。

When transporting and storing the gearbox, it is not allowed to put it directly on the cement floor of the workshop. It should be placed on the wooden support or on the smooth and dry foundation.

2) 齿轮箱如长时间不能安装，应对外露的加工表面涂防锈油，以防锈蚀。

If the gearbox cannot be installed for a long time, the exposed processing surface shall be coated with anti-rust oil to prevent rust.

3)齿轮箱运输过程中要格外谨慎，以防止在装卸时由于疏忽造成齿轮箱由于不恰当外力而损坏。

Special care shall be taken during the transportation of the gearbox to prevent it from being damaged due to improper external force incurred by negligence during loading or unloading.

4)齿轮箱起吊时需严格按图 3 所示位置起吊。

When the gearbox is lifted horizontally, it shall be lifted in strict accordance with the position shown in Fig. 3. When it is lifted vertically, two lifting lugs shall be used at the same time.

5)如果齿轮箱的存放时间延长（超过 6 个月），齿轮箱内部需进行除锈后，方能使用。

If the storage time of the gearbox is extended (more than 6 months), the gearbox can only be used after rust removal.

13. 供货范围

Scope of Supply

1) 为符合相关要求，齿轮箱供货时没有加注润滑油。

In order to meet the relevant requirements, the gearbox is supplied without lubricating oil.

2) 如无额外约定，齿轮箱箱体外部非加工面均涂底漆，中间漆和面漆。

In case of no additional agreement, the gearbox shall be painted with primer, anti-rust intermediate paint and finish paint.

3）每条船备有常用备件，详见装箱单。

Each ship is equipped with common spare parts. See the packing list for details.

14. 准备工作

Preparation

1) 加油前必须对油样进行检测。

The oil sample must be tested before refueling.

2) 齿轮箱正常供应时不会加注润滑油。齿轮箱加油应在齿轮箱的安装地点。

The gearbox will not be filled with lubricating oil when it is normally supplied. The gearbox oil shall be filled at the installation site of the gearbox.

3) 加注润滑油的类型详见表 2。

See Table 2 for the type of lubricant to be filled in details

4)由于齿轮齿条啮合传动时，接触应力大，必须保证齿轮齿条之间有适时喷脂机构，为保证齿轮齿条正常的啮合运动，需对齿轮齿条适时喷脂。特别地，齿轮箱装配后工作前，齿轮与齿条之间必须加注润滑脂，使之正常啮合，防止异常磨损。

Since the contact stress is large when the gear and rack are meshed and driven, it is necessary to ensure that there is a timely grease spraying mechanism between the gear and rack. In particular, after the gearbox is assembled and before operation, the gear and rack must be filled with grease to make them mesh normally and prevent abnormal wear.

15. 齿轮箱日常维护

Routine maintenance of gearbox

齿轮箱日常维护详见下文，齿轮箱最终用户根据需要调整。

The daily maintenance of the gearbox is detailed below, and the final user of the gearbox can adjust it as required.

1) 1-12 个月：

1-12 months:

每三个月需取油样一次以获得润滑油的磨损颗粒数,润滑油指标应符合以下要求(表 5）。

The oil sample shall be taken once every three months to obtain the wear particle number of the lubricating oil. The lubricating oil indicators shall meet the following requirements (Table 5).

表 5 润滑油指标

Table 5 Lubricating Oil Indicators

	项目 Items	单位 Unit	低行动值（换油） Low Action Value (Oil Change)	低警戒值 Low Warning Value	高警戒值 High Warning Value	高行动值（换油） High Action Value (Oil Change)
润滑油检查 Lubricating oil inspection	粘度（40℃） Viscosity（40℃）	Cst	-20%	-15%	+15%	+20%
	水分 Moisture content	Ppm			500	1000
	酸值 Acid value	MgKOH/g			1.5	2.0
	清洁度 Cleanliness				19/16	20/17

一年后每 6 个月：

Every 6 months after one year:

1) 取油样分析。

Take oil samples for analysis.

2) 检查螺栓连接及管路连接是否紧固。

Check whether the bolt connection and pipeline connection are tight.

3) 检查所有电气设备、仪表、线缆以防磨损。

Check all electrical equipment, instruments and cables to prevent abrasion.

每 3 年：

Every 3 years

用齿轮箱所使用的洁净润滑油冲洗齿轮箱并更换润滑油，并检查润滑油指标。

Flush the gearbox with clean lubricating oil used by the gearbox, replace the lubricating oil, and check the lubricating oil indicators.

2）齿轮磨损说明：

Gear wearing description:

注意事项： Cautions:	齿轮磨损极限为 6mm； Gear wearing limit is 6mm;
专用工具： Special tools:	游标卡尺、直尺、铅笔 Vernier caliper, ruler and pencil
检查方法： Inspection method:	在输出齿轮上随机选择相邻 2 颗齿，将齿面、齿槽和齿端面润滑脂和杂质清理干净： Randomly select 2 adjacent teeth on the output gear, and clean up the grease & impurities on the tooth surface, tooth groove and tooth end face: 画线测量法： Line-drawing measurement method: 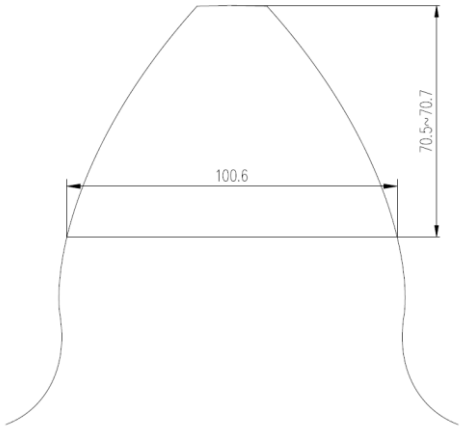 1.从齿顶往下 70.5~70.7mm 画齿顶平行线，使用游标卡尺测量线段处弦齿厚长度； Draw a tooth crest parallel line 70.5~70.7mm below the tooth crest, and use vernier caliper to measure the chord tooth thickness at the line segment; 2. 计算测量值与 100.6mm 的差值,就是齿轮磨损量 Calculate the difference between the measured value and 100.6mm, which is the gear abrasion value
处理措施： Treatment measures:	当弦齿厚测量值为 94.6~100.6mm 时，可继续使用；当测量值小于 94.6mm 时，需及时更换齿轮。 When the measured chord tooth thickness is 94.6~100.6mm, it can be used continuously; when the measured value is less than 94.6mm, replace the gear in

	time.

16. 故障处理
Troubleshooting

常见故障的处理详见下表 6

See Table 6 below for treatment of common faults

故障 Faults	可能现象 Possible Phenomena	处理措施 Treatment Measures
噪音 Noise	零件松动 Loose parts 轴承问题 Bearing problems 齿轮故障 Gear fault	检查零件的紧固件，如果必要拧紧维修 Check the fasteners of the parts and tighten them if necessary for repair 更换相应轴承 Replace the corresponding bearing 检查齿轮损伤，如果必要更换齿轮 检查零件的紧固件，如果必要，拧紧维修 Check the gear for damage. If necessary, replace the gear. Check the fasteners of the parts. If necessary, tighten them for repair
温度 Temperature	油位超出允许范围 The oil level exceeds the allowable range 供油系统故障 Oil supply system fault 轴承故障 Bearing fault 齿轮损坏 Gear damage 温度超过允许范围 Temperature exceeds the allowable range	调整油位至正常位置 Adjust the oil level to the normal position 检查供油系统，维修，直至更换 Check and repair the oil supply system until it is replaced 更换故障轴承 Replace the faulty bearing 检查齿轮损伤，如果必要更换齿轮 Check the gear for damage and replace it if necessary 切断 Cut off
泄露 Leakage	油位超出允许范围 The oil level exceeds the allowable range 供油系统泄露 Oil supply system leaks 连接处泄露 Leakage at connection	调整油位至正常位置 Adjust the oil level to the normal position 检查供油系统，维修，直至更换 Check and repair the oil supply system until it is replaced 检查连接螺栓拧紧力矩，如果必要进行调整 Check the tightening torque of connecting bolts and adjust if necessary

17. 备件清单

List of Spare Parts

齿轮箱备件清单

List of gearbox spare parts

标准编号 Standard No.	规格 Specifications	名称 Name	数量 Quantity	备注 Remarks
GB/T3452.1-2005	315*5.3	0 型圈 O-ring	19	

18. 主视图以及内部剖切图

Front View and Internal Section View

JCUD110TA 主视图

JCUD110TAFront View

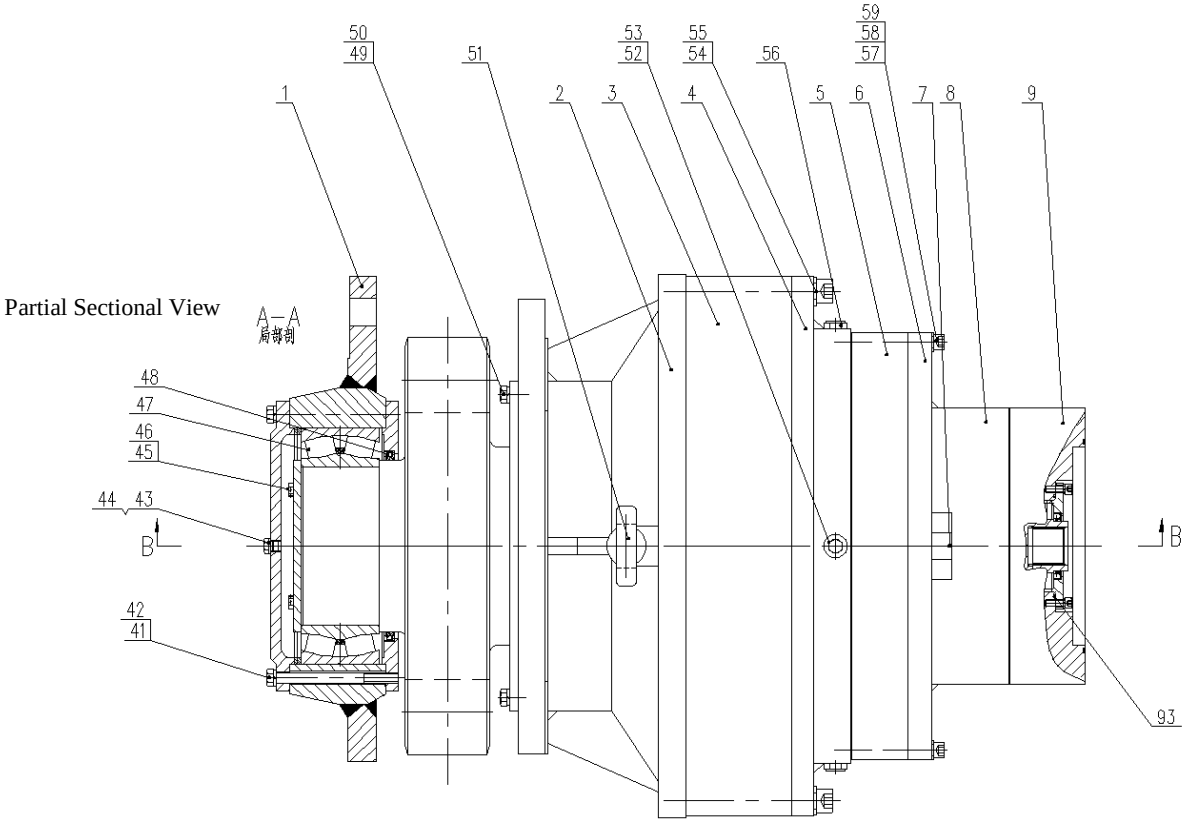

JCUD110TA 剖视图

JCUD110T ASectional View

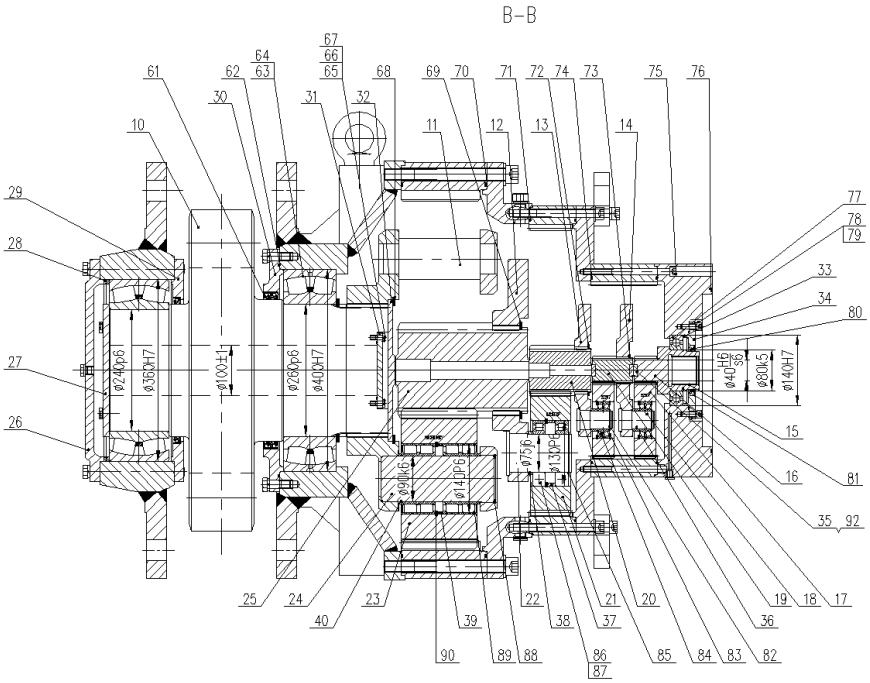

JCUD110TA 左视图

JCUD110TA Left View

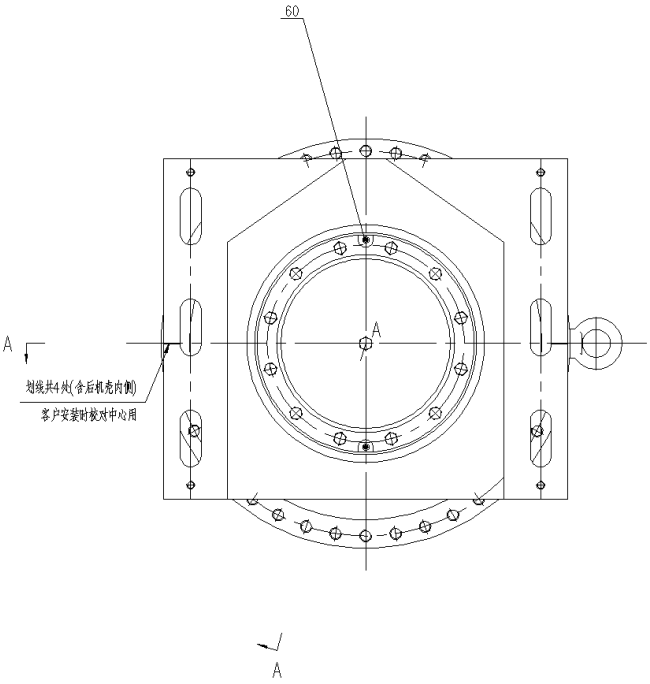

4 markings off in total (including the inner side of rear casing)

Used for proofreading the center during customer installation

JCUD110TA 零件&外购件清单

JCUD110TA Parts & Outsourced Parts List

序号 S/n	代号 Code	名称 Name	数量 Qu.ty	材料 Material	备注 Remarks
1	JCUD110TA-01	后轴承座 Rear bearing block	1	45 焊接件 45Welding part	
2	JCUD110TA-02	后机壳 Rear casing	1	40Cr 焊接件 40Cr Welding part	
3	JCUD110T-03	内齿圈Ⅳ Inner gear ring Ⅳ	1	42CrMo	
4	JCUD110TA-04	中间机壳Ⅱ Intermediate casing Ⅱ	1	45	
5	JCUD110T-05	内齿圈Ⅲ Inner gear ring Ⅲ	1	42CrMo	
6	JCUD110TA-06	中间机壳Ⅰ Intermediate casing I	1	45	
7	JCUD110TA-07	吊耳 Lifting lug	2	Q235A	
8	JCUD110TA-08	内齿圈Ⅰ Inner gear ring I	1	42CrMo	
9	JCUD110TA-09	前机壳 Front casing	1	45	
10	JCUD110TA-10	输出齿轴 Output gear shaft	1	40CrNiMoA	
11	JCUD110T-11	行星架Ⅳ Planetary carrier Ⅳ	1	40Cr 焊接件 40Cr welding part	
12	JCUD110T-12	行星架Ⅲ Planetary carrier Ⅲ	1	40Cr	
13	JCUD110TA-13	行星架Ⅱ Planetary Carrier Ⅱ	1	40Cr	
14	JCUD110TA-14	行星架Ⅰ Planetary carrier Ⅰ	1	40Cr	
15	JCUD110T-15	花键套 Spline sleeve	1	42CrMo	
16	JCUD110T-16	太阳轮Ⅰ Sun gear Ⅰ	1	20CrMnMo	
17	JCUD110TA-17	行星轮Ⅰ Planetary gear I	6	20CrMnMo	
18	JCUD110T-18	销轴Ⅰ Pin shaft I	6	40Cr	
19	JCUD110T-19	太阳轮Ⅱ Sun gear Ⅱ	1	20CrMnMo	
20	JCUD110T-20	太阳轮Ⅲ Sun gear Ⅲ	1	20CrMnMo	

21	JCUD110T-21	行星轮III Planetary gear III	3	20CrMnMo	
22	JCUD110T-22	销轴III Pin shaft III	3	40Cr	
23	JCUD110T-23	行星轮IV Planetary gear IV	3	20CrMnMo	
24	JCUD110T-24	销轴IV Pin shaft IV	3	40Cr	
25	JCUD110T-25	太阳轮IV Sun gear IV	1	20CrMnMo	
26	JCUD110T-26	闷盖 Blind cover	1	Q235A	
27	JCUD110T-27	轴端挡板 Shaft end baffle	1	Q235A	
28	JCUD110T-28	调整环 340*360*12 Adjusting ring 340*360*12	1	Q235A	
29	JCUD110T-29	透盖III Breathing cap III	1	Q235A	
30	JCUD110T-30	透盖 II Breathing cap II	1	Q235A	
31	JCUD110T-31	盖板 Cover plate	1	Q235A	
32	JCUD110T-32	顶块 II Top Block II	1	40Cr	
33	JCUD110T-33	调整环 130*140*8 Adjusting Ring 130*140*8	1	Q235A	
34	JCUD110T-34	透盖 I Breathing Cap I	1	Q235A	
35	JCUD110T-35	顶块 I Top Block I	2	40Cr	
36	JCUD110T-36	轴套 35*45*13 Axle sleeve 35*45*13	6	Q235A	
37	JCUD110T-37	隔套 120*130*16 Spacer sleeve 120*130*16	3	Q235A	
38	JCUD110T-38	轴套 75*85*9 Axle sleeve 75*85*9	3	Q235A	
39	JCUD110T-39	隔套 130*140*12 Spacer sleeve 130*140*12	3	Q235A	
40	JCUD110T-40	轴套 90*100*6 Axle sleeve 90*100*6	6	Q235A	
41	GB/T 5782-2016	六角头螺栓 M16*190 Hexagon headed bolt M16*190	12	8.8 级 Class 8.8	
42	GB/T 93-1987	标准型弹簧垫圈 16 Standard spring washer 16	12	65Mn	
43	JC/BZ 0001-2012	外六角螺塞 M16*1.5 External hexagon screw	1	成品 Finished product	

		plug M16*1.5			
44	JB/T 982-1977	组合密封垫圈 16 Combined sealing washer 16	1	成品 Finished product	
45	GB/T 32.1-1988	六角头头部带孔螺栓 M12*30 Hexagon head bolt with hole M12*30	4	8.8 级 Class 8.8	
46	YB/T 5294-2009	钢丝 SZ-F-1 Steel wire SZ-F-1	1	钢丝 Steel wire	
47	GB/T 288-2013	调心滚子轴承 24048CA/C3W33 Spherical roller bearing 24048CA/C3W33	1	NBI	240*360*118
48	标配 Standard Configuration	油封 TC260*290*15 Oil seal TC260*290*15	1	NBR	
49	GB/T 5782-2016	六角头螺栓 M16*45 Hexagon headed bolt M16*45	12	8.8 级 Class 8.8	
50	GB/T 93-1987	标准型弹簧垫圈 16 Standard spring washer 16	12	65Mn	
51	GB/T 825-1988	吊环螺钉 M30 Eye bolt M30	1	成品 Finished product	
52		通气阀 M22*1.5 Breather valve M22*1.5	1	不锈钢 Stainless steel	
53	ISO 9974-4-2016	内六角螺塞 M22*1.5 Hexagon screw plug M22*1.5	1	成品 Finished product	
54	GB/T 70.1-2008	内六角圆柱头螺钉 M24*240 Hexagon socket head cap screw M24*240	40	12.9 级 Class 12.9	
55	GB/T 97.1-2002	平垫圈 A 级 24 Flat washer Class A 24	40	200HV	
56	JC/BZ 0003-2012	旋入式圆形油标 M22*1.5 Screw-in round oil pointer M22*1.5	2	成品 Finished product	
57	GB/T 70.1-2008	内六角圆柱头螺钉 M16*150 Hexagon socket head cap screw M16*150	32	10.9 级 Class 10.9	
58	GB/T 97.1-2002	平垫圈 A 级 16 Flat washer Class A 16	36	200HV	
59	GB/T 70.1-2008	内六角圆柱头螺钉 M16*170 Hexagon socket head cap screw M16*170	4	10.9 级 Class 10.9	
60	JB/T 7940.1-1995	直通式压注油杯 M10*1	2	成品	

		Straight hydraulic grease nipple M10*1		Finished product	
61	标配	油封 TC280*310*15 Oil seal TC280*310*15	2	NBR	
62	GB/T 3452.1-2005	液压气动用 O 形橡胶密封圈 410*3.55 Rubber O-ring for hydraulic and pneumatic use 410*3.55	1	橡胶 I-2 Rubber I-2	
63	GB/T 288-2013	调心滚子轴承 23052CA/C3W33 Spherical roller bearing 23052CA/C3W33	1	NBI	260*400*104
64	DIN 471-1981	轴用挡圈 260‖S=5 Shaft ring 260‖S=5	1	65Mn	
65	GB/T 32.1-1988	六角头头部带孔螺栓 M8*25 Hexagon head bolt with hole M8*25	4	8.8 级 Class 8.8	
66	YB/T 5294-2009	钢丝 SZ-F-1 Steel wire SZ-F-1	1	钢丝 Steel wire	
67	GB/T 3452.1-2005	液压气动用 O 形橡胶密封圈 106*2.65‖内径*线径 Rubber O-ring for hydraulic and pneumatic use 106*2.65‖ inner diameter * wire diameter	1	NBR	
68	DIN 472-1981	孔用挡圈 280‖S=5 Retaining ring for hole 280‖S=5	1	65Mn	
69	DIN 471-1981	轴用挡圈 170‖S=4 Shaft ring 170‖S=4	1	65Mn	
70	GB/T 3452.1-2005	液压气动用 O 形橡胶密封圈 730*5.3 Rubber O-ring for hydraulic and pneumatic use 730*5.3	2	橡胶 I-2 Rubber I-2	
71	GB/T 3452.1-2005	液压气动用 O 形橡胶密封圈 590*3.55 Rubber O-ring for hydraulic and pneumatic use 590*3.55	2	橡胶 I-2 Rubber I-2	
72	DIN 471-1981	轴用挡圈 88‖S=3 Shaft ring 88‖S=3	1	65Mn	
73	DIN 471-1981	轴用挡圈 50‖S=2 Shaft ring 50‖S=2	1	65Mn	
74	GB/T 3452.1-2005	液压气动用 O 形橡胶密封圈 355*3.55‖内径*线径，非标 Rubber O-ring for hydraulic	2	橡胶 I-2 Rubber I-2	

		and pneumatic use 350*3.55‖ inner diameter * wire diameter, non-standard			
75	GB/T 70.1-2008	内六角圆柱头螺钉 M12*170 Hexagon socket head cap screw M12*170	16	10.9 级 Class 10.9	
76	GB/T 3452.1-2005	液压气动用 O 形橡胶密封圈 307*5.3‖内径*线径 Rubber O-ring for hydraulic and pneumatic use 307*5.3‖inner diameter * wire diameter, non-standard	1	橡胶 I-2 Rubber I-2	
77	GB/T 276-2013	深沟球轴承 6216/C3 Deep groove ball bearing 6216/C3	1	SKF/FAG	80*140*26
78	GB/T 70.1-2008	内六角圆柱头螺钉 M10*30 Hexagon socket head cap screw M10*30	4	8.8 级 Class 8.8	
79	GB/T 93-1987	标准型弹簧垫圈 10 Standard spring washer 10	4	65Mn	
80	标配 Standard Configuration	油封 TC75*100*10 Oil seal TC75*100*10	1	FKM	
81	DIN 471-1981	轴用挡圈 80‖S=2.5 Shaft ring 80‖S=2.5	1	65Mn	
82	DIN 471-1981	轴用挡圈 35‖S=1.5 Shaft ring 35‖S=1.5	6	65Mn	
83	DIN 472-1981	孔用挡圈 72‖S=2.5 Retaining ring for hole 72‖S=2.5	12	65Mn	
84	GB/T 288-2013	调心滚子轴承 22207CA/C3W33 Spherical roller bearing 22207CA/C3W33	6	NBI	35*72*23
85	DIN 471-1981	轴用挡圈 75‖S=2.5 Shaft ring 75‖S=2.5	3	65Mn	
86	GB/T 283-2007	圆柱滚子轴承 NJ215E/C3 Cylindrical roller bearingNJ215E/C3	6	NBI	75*130*25
87	DIN 472-1981	孔用挡圈 130‖S=4 Retaining ring for hole 130‖S=4	3	65Mn	
88	DIN 472-1981	孔用挡圈 92‖S=3 Retaining ring for hole 92‖S=3	3	65Mn	
89	NBI 供货标准 NBI Supply Standard	轴承 NNCF5018V/C3 Bearing NNCF5018V/C3	6	NBI	90*140*67

90	DIN 472-1981	孔用挡圈 140‖S=4 Retaining ring for hole 140‖S=4	3	65Mn	
91	ISO 9974-4-2016	内六角螺塞 M12*1.5 Hexagonal socket head plug M12*1.5	1	成品 Finished product	
92	JCUD110T-41	顶块III Top Block III	1	40Cr	
93	GB/T 3452.1-2005	液压气动用 O 形橡胶密封圈 145*2.65‖内径*线径 Rubber O-ring for hydraulic and pneumatic use 145*2.65‖ inner diameter * wire diameter	1	NBR	
94	JCUD110TA-42	铭牌 Nameplate	1	316L 不锈钢 316L stainless steel	
95	GB/T 827-1986	标牌用钉 2*5 Nails for signs 2*5	4	316L 不锈钢 316L stainless steel	

项目编号：

工程编号：平台升 28A-1

工程名称：1320T 电动齿轮齿条升降系统

1320T 电动齿轮齿条升降系统

1320T electric rack and pinion jacking system

备品备件清单

Spare parts list

					1320T 电动齿轮齿条升降系统 1320T electric rack and pinion jacking system	资料编号	HJ/Y-PTS28A-1-S-BPBJ
标记	数量	修改单号	签字	日期			

设 计			备品备件清单 Spare parts list	标 记	版 本
校 核				S	
审 核					
审 定					
会 签				武汉船用机械有限责任公司 WMMP WUHAN MARINE MACHINERY PLANT CO., LTD.	
批 准					

1.机械系统备品备件 Spare parts for mechanical system

齿轮箱备件清单

List of gearbox spare parts

序号 No	名称 Name	规格（型号） Specification (Model)	数量 Quantity	备注 Remarks
1	液压气动用 O 型圈 O-ring seal	φ315×5.3 GB/T3452.1-2005	20	
2	骨架油封 Frame oil seal	TC75*100×10	10	
3	预压式透气帽 Prepressed breathable cap	M22*1.5‖HSS/316L	10	
4	内六角螺塞 inner hexagon screw plug	M22*1.5 ISO 9974.4-2016	10	
5	旋入式圆形油标 Round oil mark	M22*1.5 JC/BZ 0003-2012	10	

电机备件:

List of motor spare parts

序号 No	名称 Name	规格 Specification	数量 Quantity	备注 Remarks
1	释放杆 brake handle	/	6	
2	整流器 Rectifier	/	6	
3	微动开关 micro motion switch		12	
4	刹车片 brake pads		6	

Attention: 1.The quantity of the above table is for one boat.

2.The above spare parts are delivered to our company by the parts supplier, and our company uniformly delivers to the shipyard.

注意：1.以上备件为一条船的数量

2.以上备件由配套件供应商发货至我司，我司统一发货至船厂。

编制：		审核：		批准：	

2. 润滑系统备品备件 Spare parts for lubrication system

序号	名称	型号	数量	备注
1	压力表 Pressure gauge	Y0-40MPa	1	
2	过滤器滤芯 Filter element	CLD-P15-001	2	

Attention: 1. The quantity of the above table is for one boat.
2. The above spare parts are delivered to our company by the parts supplier, and our company uniformly delivers to the shipyard.

注意：1. 以上备件为一条船的数量
2. 以上备件由配套件供应商发货至我司，我司统一发货至船厂。

3. 电气系统备品备件 Spare parts for electrical system

序号 No	规格（型号） Specification (Model)	名称 Name	数量 Quantity
1.	MP1-30R	按钮头 Button head	2
2.	MP1-30Y	按钮头 Button head	2
3.	MP1-31G	绿色带灯按钮头 Green button head with light	2
4.	MP1-31L	蓝色带灯按钮头 Blue button head with light	2
5.	MP1-31Y	黄色带灯按钮头 Yellow button head with light	2
6.	M3SS1-30B	三档选择开关头 Third gear selector switch head	1
7.	M2SS2-30B	两档选择开关头 Two gear selector switch head	1
8.	M2SS2-31L	两档选择开关头 Two gear selector switch head	1
9.	M2SSK1-301	两档钥匙开关头 Two gear key switch head	1

编制：		审核：		批准：	

10.	CL2-502C	白色指示灯 White indicator lamp	1
11.	CL2-502R	红色指示灯 Red indicator lamp	1
12.	MLBL-01Y	黄色 LED 集成灯座 Yellow LED integrated lamp holder	2
13.	MLBL-01L	蓝色 LED 集成灯座 Blue LED integrated lamp holder	2
14.	MLBL-01G	绿色 LED 集成灯座 Green LED integrated lamp holder	2
15.	MCBH-00	基座 base	4
16.	MCB-10	常开触点 Normally open contact	4
17.	MCB-01	常闭触点 Normally closed contact	4
18.	CAD50M7C	中间继电器 Intermediate relay	2
19.	GR-4C-AC230V	继电器线圈 Relay coil	2
20.	CR-2C-DC24V	继电器线圈 Relay coil	10
21.	CB1-620B	蜂鸣器 buzzer	1
22.	LW39-16C-4A0-1*7J/4P-G (0,1，2，3，4，5，6，7)	7 档选择开关 7 gear selector switch	1
23.	FW2-0168	4#工具备件箱 4#Tool spare parts box	1

Attention: The quantity of the above table is for one boat.
注意：1.以上备件为一条船的数量

变频器备件

序号 No	规格（型号） Specification (Model)	名称 Name	数量 Quantity
1.	170M6412	熔断器 fuse	8
2.	170M6410	熔断器 fuse	8

编制：		审核：		批准：	

3.	170M4416	熔断器 fuse	8
4.	170M4410	熔断器 fuse	8
5.	FR27UQ69V160T	熔断器 fuse	8
6.	RCL314024-24DC	继电器 fuse	8
7.	RCL425024	继电器 fuse	8
8.	DEK_REL_G24/21	继电器 fuse	8

Attention: The quantity of the above table is for two boat.
注：以上变频器备件为（平台升 28-1，平台升 28-2 两条船）