KONGSBERG

MP7900

Maintenance Manual

MP7900 Base model:	327059
MP7900 with LAN/CAN connection model:	327063
MP7900 NAV model:	327906
MP7900 with 4-Screen model:	327908
MP7900 with 8 channel BlueStorm model:	327910
MP7900 with LAN/CAN connection and COM2 port model:	327924
MP7900 HS/DP Recorder 500 model:	329693
MP7900 with Matrox Extio interface model:	330507
MP7900 with mirrored system discs model:	343811
MP7900 with LAN/CAN Windows 7 model:	347744

328925/J
February 2013 © Kongsberg Maritime AS

The DVD-RW drive assembly is also tilted up and located in front to the left.

Figure 3 Cabinet interior

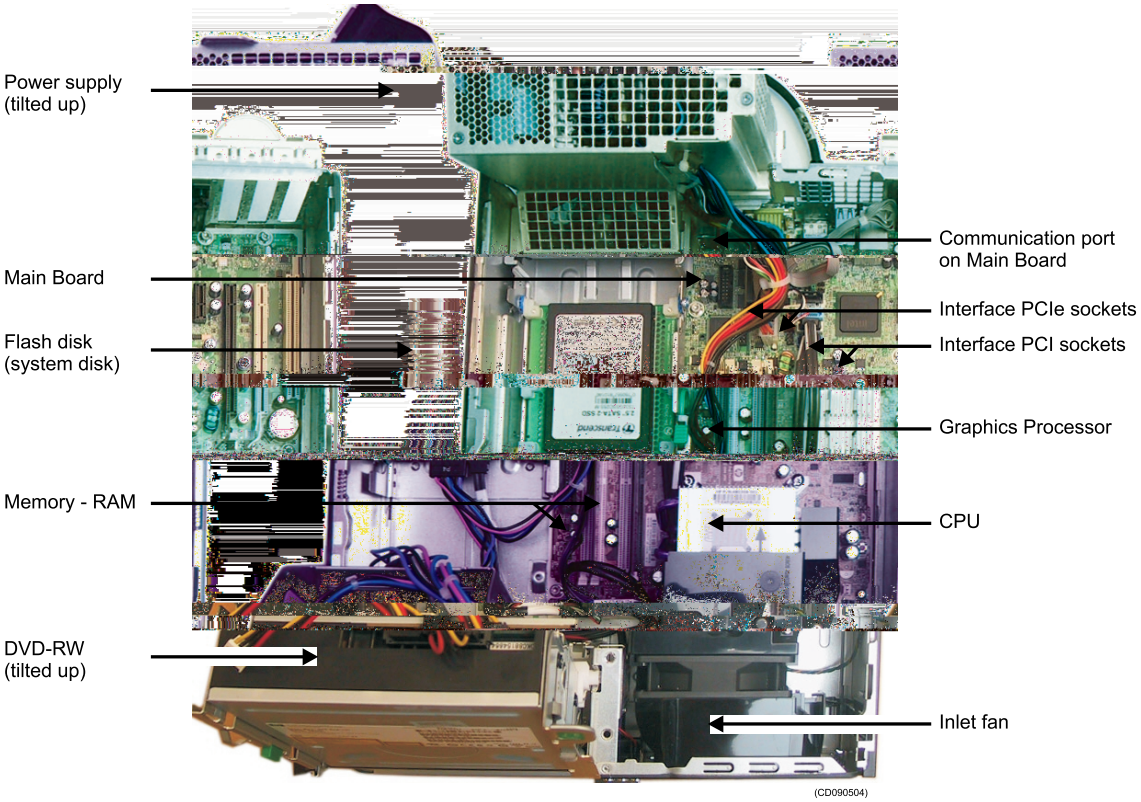

The interface card assembly modules (removed in figure above) are located in the upper right hand corner. They can easily be pulled out for changing of interface cards. No screws are to be unscrewed, only lift the lever at the green coloured handle, which secures the interface cards to the main board and release the interface card lock. See also *Removing a PCI card* on page 36.

MP7900 configuration

The following cards and components are available for the different models of the MP7900:

- Main board (Motherboard)
- CPU
- Memory (RAM, 2 x 1 GB)
- Power supply 115/230 VAC
- Network card (Net B and Net C)
- Graphics card (2–screen / 4–screen)
- Serial line connector (COM2)

- BlueStorm card (8 channel serial card)
- LAN card for LAN/CAN connections
- Radar Interface card
- Flash disk (system disk)
- Hard disk drive (recorder disk)
- DVD-RW drive
- Miniature speaker
- Reset button (On/Off)

Each of the computer and interface cards, drives and power supplies listed above are shortly described in sections below. The replaceable modules are described more detailed in separate documents (*Hardware Module Descriptions*).

The following figure shows a block diagram of the MP7900.

Note

The figure does not show an actual MP7900 configuration, but the available interface cards, drives and power supplies.

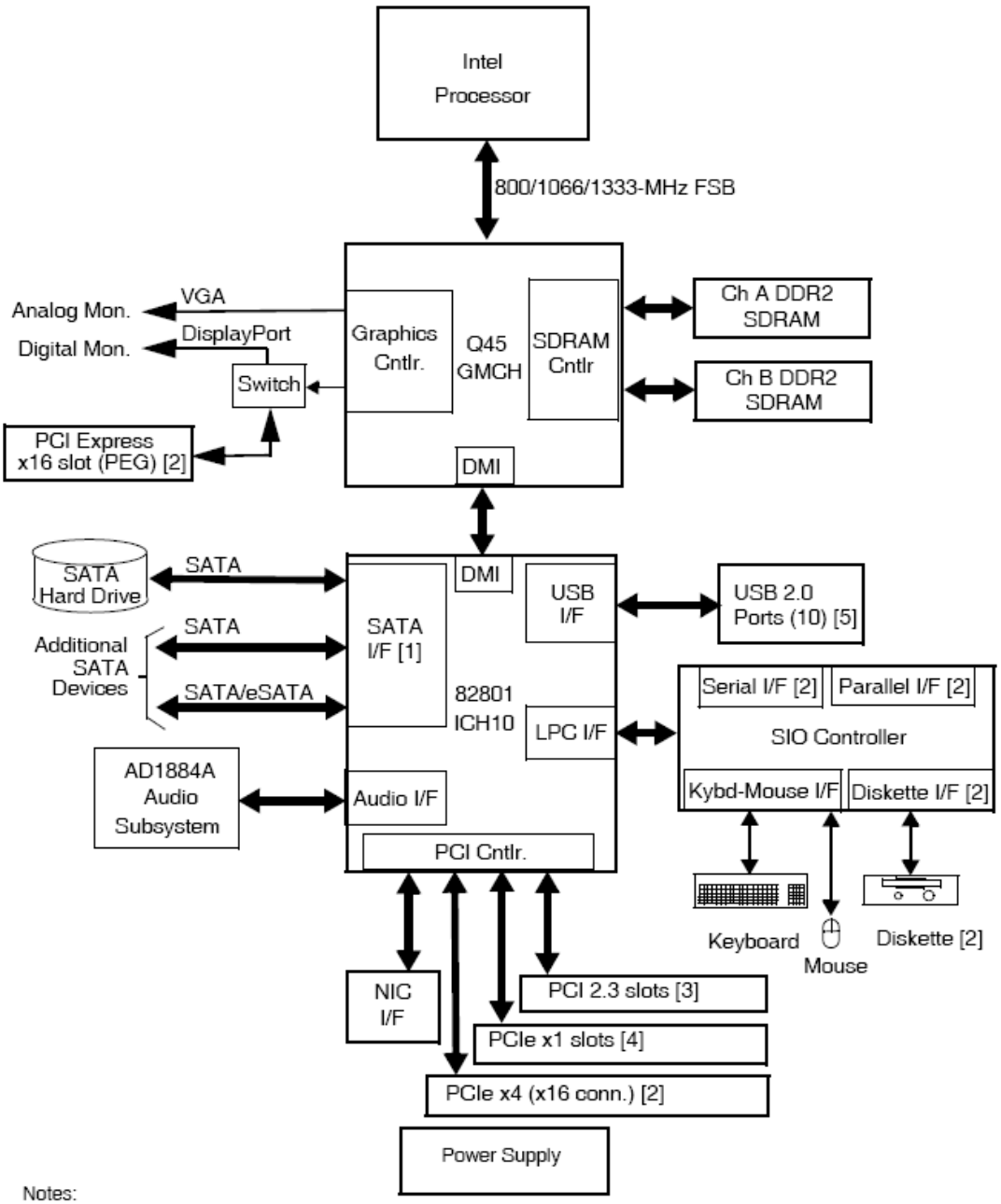

Notes:
[1] 2 SATA ports in USDT, 3 SATA ports in SFF, 4 SATA ports in CMT, and 1 eSATA port in SFF and CMT.
[2] SFF and CMT only
[3] 0 slots in USDT, 1 or 2 slots in SFF, 3 slots in CMT
[4] 1 MiniCard slot in USDT, 1 slot in SFF and CMT
[5] 8 ports accessible externally, 2 ports accessible internally

Main board

The main board is equipped with a 2.4 GHz Intel dual core CPU and 2 x 1 GB RAM.

The main board is not considered a replaceable module because the computer has to be rebuilt from scratch and thoroughly tested if the board is changed.

Power Supply

One power module is used. It has 115 VAC or 230 VAC as input voltage, and is of type Autosense.

Note

See Replaceable Parts and Consumables on page 52 for module names and part numbers, and see the corresponding Hardware Module Description for more technical information.

Interface cards

The following interface cards are available with MP7900 computer:

Dual network card, Single network card, 2-screen graphic card, 4-screen graphic card, Radar interface card 2 (RIC2), BlueStorm serial interface card, and COM2 connector.

For details about the interface cards see the appropriate *Hardware Module Descriptions*, and refer to *Interface cards and connections* on page 13.

Note

See Replaceable Parts and Consumables on page 52 for module names and part numbers.

Storage drives

Standard DVD-RW drive, flash disk and hard disk drive for HS/DP Recorder data is used in the computer.

For details about the storage drive see the appropriate *Hardware Module Description*.

Note

See Replaceable Parts and Consumables on page 52 for module names and part numbers.

Miniature speaker

The speaker is located inside the cabinet on the front wall.

Cooling fans

Two CPU fans are located in the centre, behind the CPU. It provides cooling to the CPU and graphics processor.

The power supply module contains a fan located inside the power supply cabinet.

Power ON/OFF button

A black ON/OFF button is located in the centre of the cabinet front.

Pressing the button once, the computer is turned On or Off, depending on the prerequisite.

MP7900 external connections

The MP7900 provides (including options) the necessary set of standard PC connectors for user interfaces and the necessary set of application-required connectors for system interfacing.

Main board connections

This section lists the connectors available from the main board. For more details refer to the *Hardware Module Description* for the main board.

The following figure shows front connectors for external connections:

Figure 4 Front – external connections

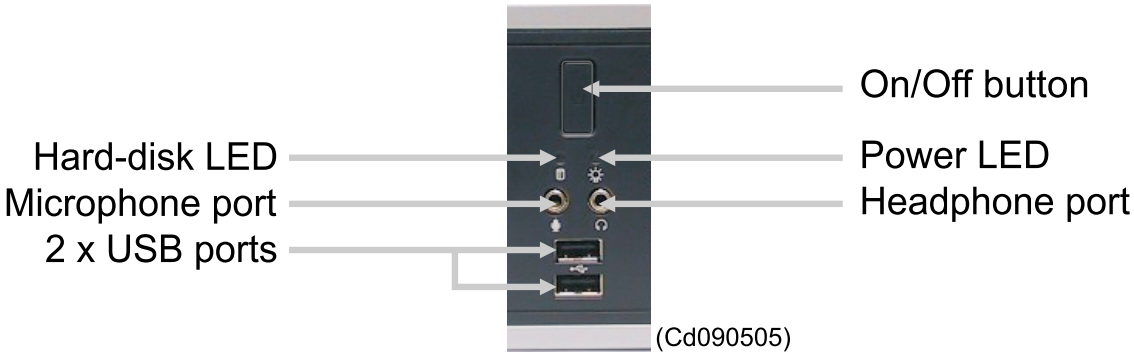

The following figure shows rear wall connectors for external connections:

Figure 5 Rear – external connections

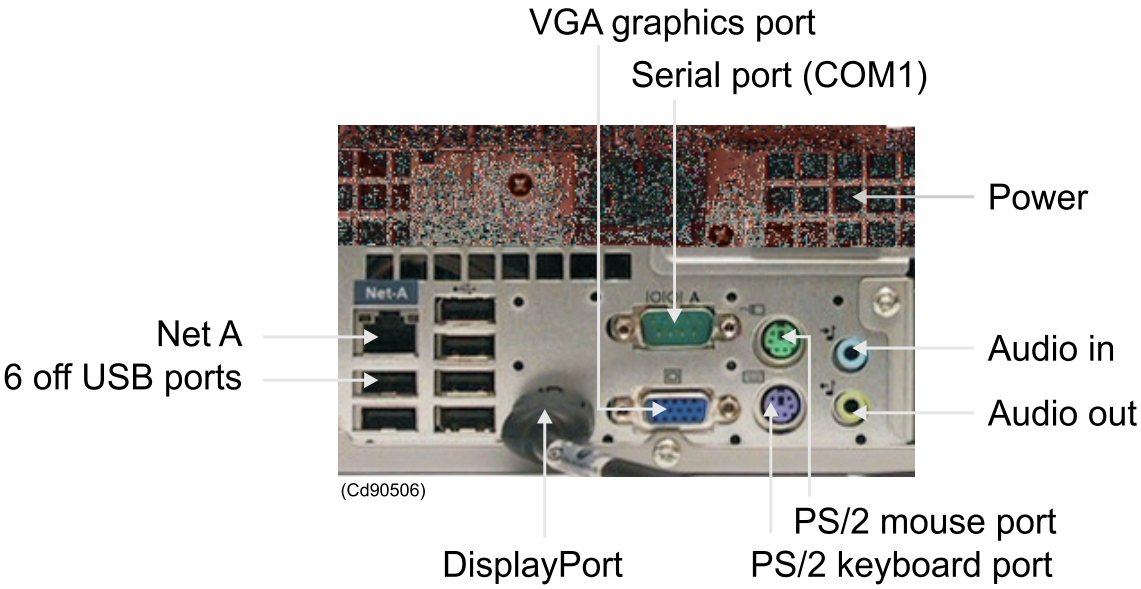

Mouse

This is a standard PS/2 serial mouse connector.

Keyboard

This is a standard PS/2 keyboard connector.

Parallel port (not shown in the picture)

The Parallel port complies with the standard for PC parallel ports.

With appropriate driver software and configuration a local printer can be connected to this port.

Note

The Parallel port is not included in the NAV model.

COM1 and COM2 (not shown in the picture)

These are standard PC serial line COM ports.

Network

This is a standard Ethernet network connection based on the RJ45 connector. It is assigned to the network A in the redundant process network.

Audio In

This is a audio line input connection based on the mini jack connector.

Audio Out

This is a audio line output connection based on the mini jack connector.

Microphone

This is a microphone connection based on the mini jack connector. A contact is located on the front and on the rear wall.

Headphones

This is a headphones connection based on the mini jack connector and is located on the front.

USB

The main board provides eight USB (Universal Serial Bus) roots (ports) for attaching USB devices. Two ports are available on the front and six on the rear panel.

Interface cards and connections

The illustrations below shows the different types of MP7900 computers.

Eight different types of MP7900 computers are available: (see front page for part numbers). Common for all rear panels are: Net A, 6 off USB ports, VGA graphics port, Display port, PS/2 mouse port, Keyboard port, Audio -in and -out, and Main power plug as shown in *Rear – external connections* on page 12.

The rear panel layout for each type is shown in figures below. It is focused on slot 1 through 4 where the differences are.

MP7900 Base model, HS/DP Recorder 500 model and mirrored system discs model

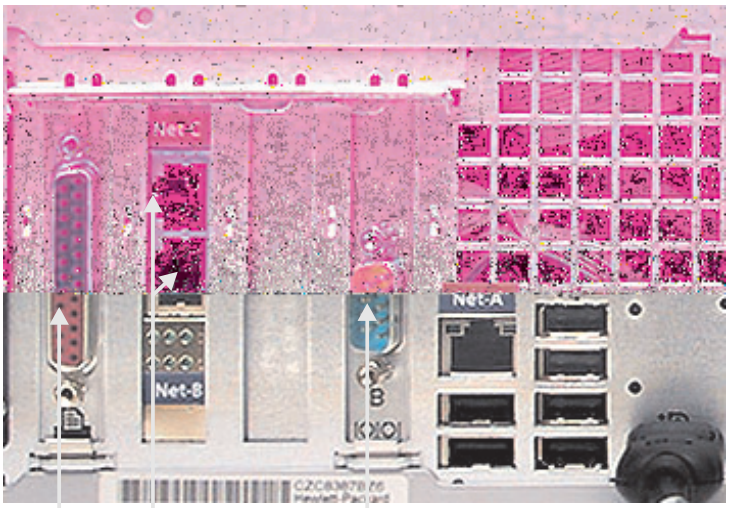

The different card slots are as follows (seen from left to right – slot 1 through 4): Parallel port, Dual network card (Net B and C), empty slot and COM2 connector.

MP7900 NAV model

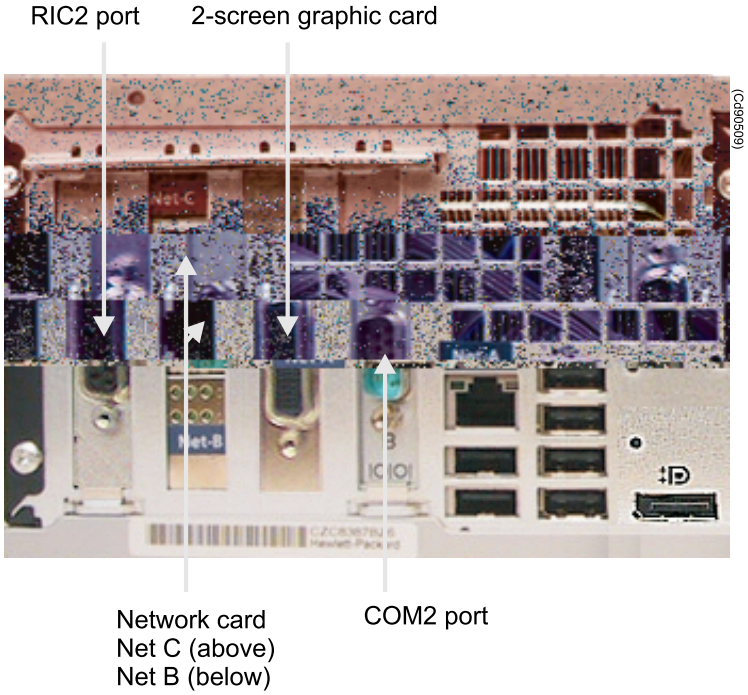

The different card slots are as follows (seen from left to right – slot 1 through 4): RIC2, Dual network card (Net B and C), 2-screen graphic card, COM2 connector.

MP7900 with 4-screen model

The different card slots are as follows (seen from left to right – slot 1 through 4): Parallel port, Dual network card (Net B and C) and 4-screen graphic card.

MP7900 with LAN/CAN model

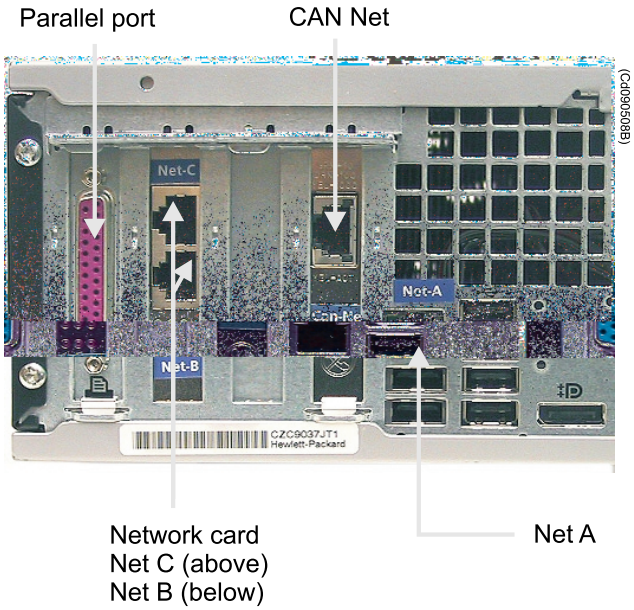

The different card slots are as follows (seen from left to right – slot 1 through 4): Parallel port, Dual network card (Net B and C), empty slot and Single network card (CAN net).

MP7900 with LAN/CAN + 2 COM ports model

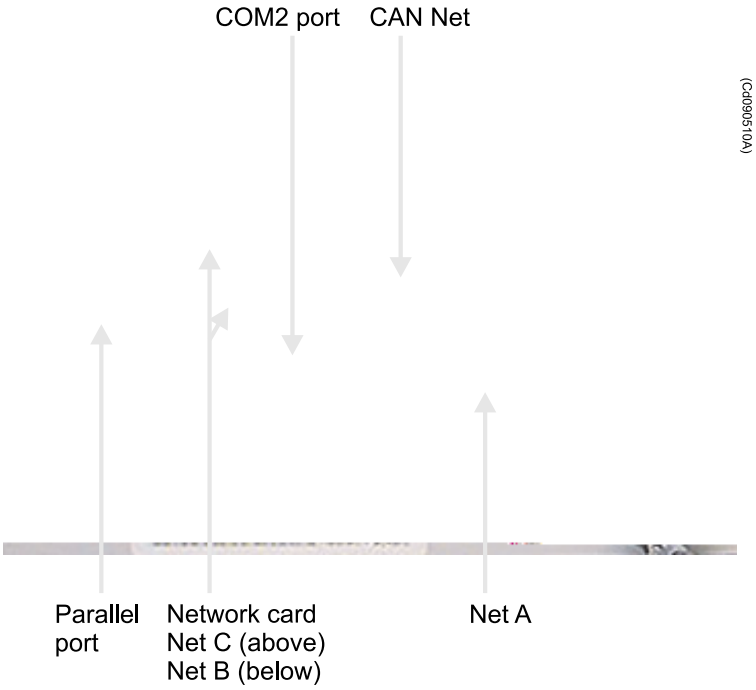

The different card slots are as follows (seen from left to right – slot 1 to 4): Parallel port, Dual network card (Net B and C), COM2 connector and Single network card (CAN net).

MP7900 with BlueStorm model (8 channel serial card)

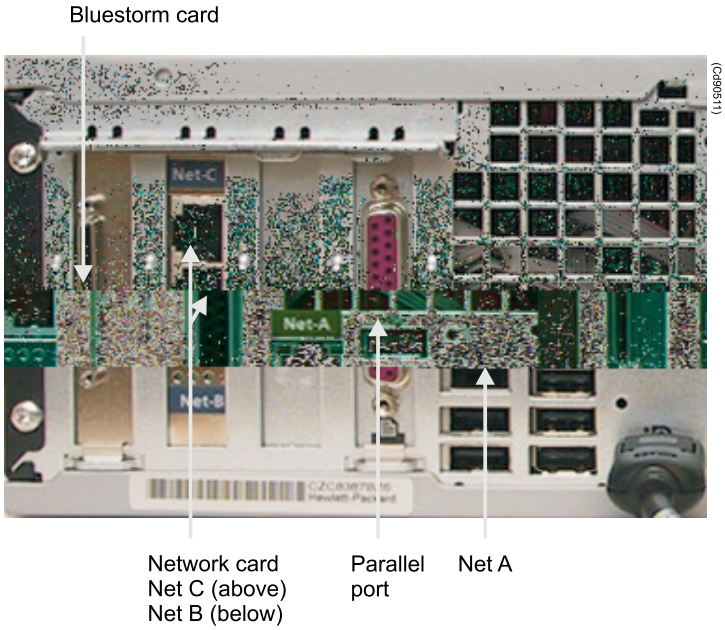

The different card slots are as follows (seen from left to right – slot 1 to 4): BlueStorm card, Dual network card (Net B and C), empty slot and Parallel port.

MP7900 with Matrox Extio fibre model

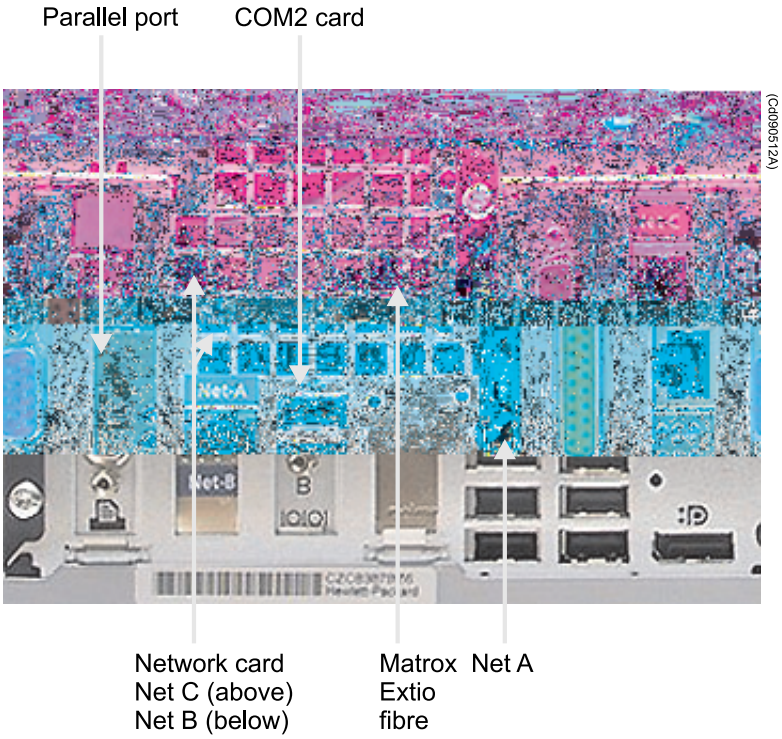

The different card slots are as follows (seen from left to right – slot 1 to 4): Parallel port, Dual network card (Net B and C), COM2 connector and Matrox Extio fibre card (Graphic Card).

Interface cards

Dual network card (standard)

The dual network card is a PCIe 4x type card and provides two network ports. The lower port is normally connected to Network B, and the upper port, if required by the system, is connected to Network C. The connectors are of the RJ45 type. For details refer to the *Hardware Module Description* for the network card.

Single network card (optional)

The single network card is used as interface to the external LAN/CAN converter. It is a PCIe 16x type card. The connector on the single LAN interface card is a RJ45 type.

For details refer to the *Hardware Module Description* for the single LAN network card.

RIC2 (optional)

The Radar Interface Card2 (RIC2) is a PCI type card, is normally located in slot 1 and is used for connection to radar scanners. For details refer to the *Hardware Module Description* for the appropriate card.

BlueStorm interface card

The BlueStorm card is an 8 channel serial interface card. This card is a PCI type card and provides four RS422/485 ports and four RS232 ports serial channels by the use of a special interface split cable. The connector types used on the cable are eight 9-pin male D-sub.

Note

Read the numbering on the cable connectors for which is which serial line.

For details refer to the *Hardware Module Description* for the BlueStorm interface card.

Graphics cards

The 2-screen Matrox Millennium P690LP graphics card is a PCIe 16x slot card. Split cables that come with the graphics card are used for connecting to the colour monitors.

The 4-screen Matrox M9140 Plus graphics card is a PCIe 16x slot card. Split cables that come with the graphics card are used for connecting to the colour monitors.

The fibre-optic interface card Matrox Extio PCIe1x converts outgoing bus data to an optical signal and converts incoming bus data back to an electrical signal. The card transmits and receives this optical data to and from the remote graphic unit via a fibre-optic cable. Extio has integrated graphics, audio and USB hardware which process the bus data as if it was part of an add-in card directly installed in a computer expansion slot.

Note

Read the numbering on the cable connectors for which monitor they connect.

Power connection

The computer is provided with a standard three-pin apparatus socket and fits a standard female three-hole apparatus plug, as shown in *Rear – external connections* on page 12.

Note

The power supply is of the Autosense type, and thereby automatically senses correct input voltage (either 115 VAC or 230 VAC).

Chassis ground connection

The computer is provided with a ground terminal screw located at the right lower corner when the computer is seen from the rear side, as shown in *Rear – external connections* on page 12. This terminal must be bonded to PE (Protection Earth) with a short ground wire having large cross section.

MP7900 Technical specifications

POWER SUPPLY REQUIREMENTS

Voltage:	115/230 VAC (autosense)
Power consumption from power supply:	240 W

CONFIGURATION, PERFORMANCE AND CAPACITY

CPU type and speed:	Intel Core Duo E8400
Hard disk drive for DP/HS Recorder disk:	Hard Disc Drive 2.5” SATA
Flash disk:	Transcend 32 GB SSD drive
DVD-RW drive:	SATA 16X super multi light scribe drive, (see item no. 5 in Spare Parts list)
Memory:	2 x 1 GB
Power Supply 115/230 VAC:	Power Supply, (see item no. 1 in Spare Parts list)
VGA:	On main board — Intel processor
DVI:	Display port
Dual network interface card: (Network interface, one port on main board)	Broadcom Dual 10/100/1000 LPnic PWLA8492MTBLK5 (see item no. 10 in Spare Parts list)
Single network interface card:	Broadcom NetXtreme Gigabit PCIe NIC, (optional) - (see item no. 11 in Spare Parts list)
Graphics card (2-screen):	Matrox Millennium P690LP, PCI x 16, (see item no. 13 in Spare Parts list)
Graphics card (4-screen):	Matrox M9140 Plus, (see item no. 14 in Spare Parts list)
RIC:	RIC card (optional) - (see item no. 16 in Spare Parts list)
Serial interface:	- BlueStorm 8 ports RS422/485 FH surge DB09M cable

MECHANICAL SPECIFICATION

Size: width x depth x height:	337 x 379 x 103 mm
Weight:	8.5 kg (Base model)
IP degree:	IP22

ENVIRONMENTAL REQUIREMENTS

Refer to KM Environmental Specification, document number 161011.

LIFE CYCLE SPECIFICATION

MTBF calculated:	108 206 hours

Fault Finding

This section presents the fault finding principles for the MP7900 computer.

Fault location/identification

If a fault situation has occurred, the fault is normally identified from the symptoms observed. It is therefore important to record all these observations to help the maintenance person or service engineer. All error messages shown on the screen should be logged for this purpose.

Note

If you are not able to correct the error situation yourself, you should contact your nearest Kongsberg Maritime service office for advice or to request service.

The fault-finding table below assumes that the problem is caused by the MP7900 computer itself and no external factors are involved.

Table 1 Fault-finding tips

ID	Symptoms	Probable Error Source	Corrective Action
1	No visible or audible sign of power present at MP7900. Fans are not blowing.	External supply voltage is turned off or circuit-breaker fuse has tripped.	Check the 115/230 VAC power supply.
		Internal power supply defect.	Replace power supply. See procedure *How to replace the Power Supply model* on page 39.
2	Applications are not loading when booting the MP7900. Only blue screen displayed.	Defective file system.	Reinstall the software by using the system backup CD.
3	Applications are not loading when booting after the entire operating system software has been installed on MP7900. Only blue screen displayed.	Defective flash disk	Replace flash disk. See procedure *How to replace the flash disk* on page 30.
4	MP7900 does not respond over network on either channel.	Network task not running.	Reboot MP7900.

Table 1 Fault-finding tips (cont'd.)

ID	Symptoms	Probable Error Source	Corrective Action
5	MP7900 responds over network on only one of three channels.	Defective network card or network part of main board.	Replace network card. See procedure *How to replace a socket-mounted PCI and PCIe card* on page 35.
6	MP7900 crashes or hangs unexpectedly.	Possible defective RAM memory card.	Replace RAM memory card. See procedure *How to replace a RAM memory card* on page 37.

Preventive Maintenance

This section presents the preventive maintenance procedures for the MP7900.

Replacement procedures relating to preventive maintenance, are described only in the Corrective maintenance section.

How to clean the MP7900 cabinet surface

Use a lint-free, non-abrasive cloth and a neutral or mild soap solution for best result. Do not use a dripping wet cloth when cleaning. Use only a moistened cloth.

Preventive maintenance intervals

Note

These procedures should be performed on each MP7900 in the system. Local evaluations should be made to determine site-specific maintenance intervals.

Table 2 Recommended preventive maintenance intervals

ACTION	INTERVAL RECOMMENDED
Clean all operator panels. Clean all filters for units equipped with fans.	Every week.
Clean cabinet surface.	Each month.
Check for loose connectors and wires.	Every six month.

Corrective Maintenance

This section presents the corrective maintenance procedures for the MP7900.

Corrective maintenance procedures not described in this section are to be found in the appropriate *Hardware Module Description* for the part numbers referred to in the replaceable parts and recommended spare parts list. Corrective maintenance of parts not provided by any of the above should be performed by Kongsberg Maritime service personnel only.

Replacement procedures

Caution

Electrostatic charges can damage components on the cards. Notice the following precautions: Always wear a properly connected earthing strap when handling unpacked cards. Place unpacked cards only on a properly connected earthing mat or a shielding bag. Keep cards in their shielding bags when not installed. Never store cards near electromagnetic or electrostatic devices.

Note

Replacement procedures that require power to be turned off must be preceded by shutting down the MP7900 in a controlled manner. Refer to the system operator manual for the appropriate procedure.

WARNING

To avoid the risks accompanying high voltages, always turn off the power circuit supplying the computer before you open the cabinet lid.

How to remove MP7900 computer from Damper kit

Two Damper kits are available: One for horizontal mounting and one for vertical e.g. door mounting, see figures below.

1 Disconnect all cables connected to the computer.

2 Standing in front of the computer locate the damper kit.

3 Unscrew 4 off screws (horizontal mounting, see Figure 6) or 6 off screws (vertical mounted, see Figure 7) on the damper kit securing the computer.

Figure 6 Horizontal mounted Damper kit

Figure 7 Vertical mounted Damper kit

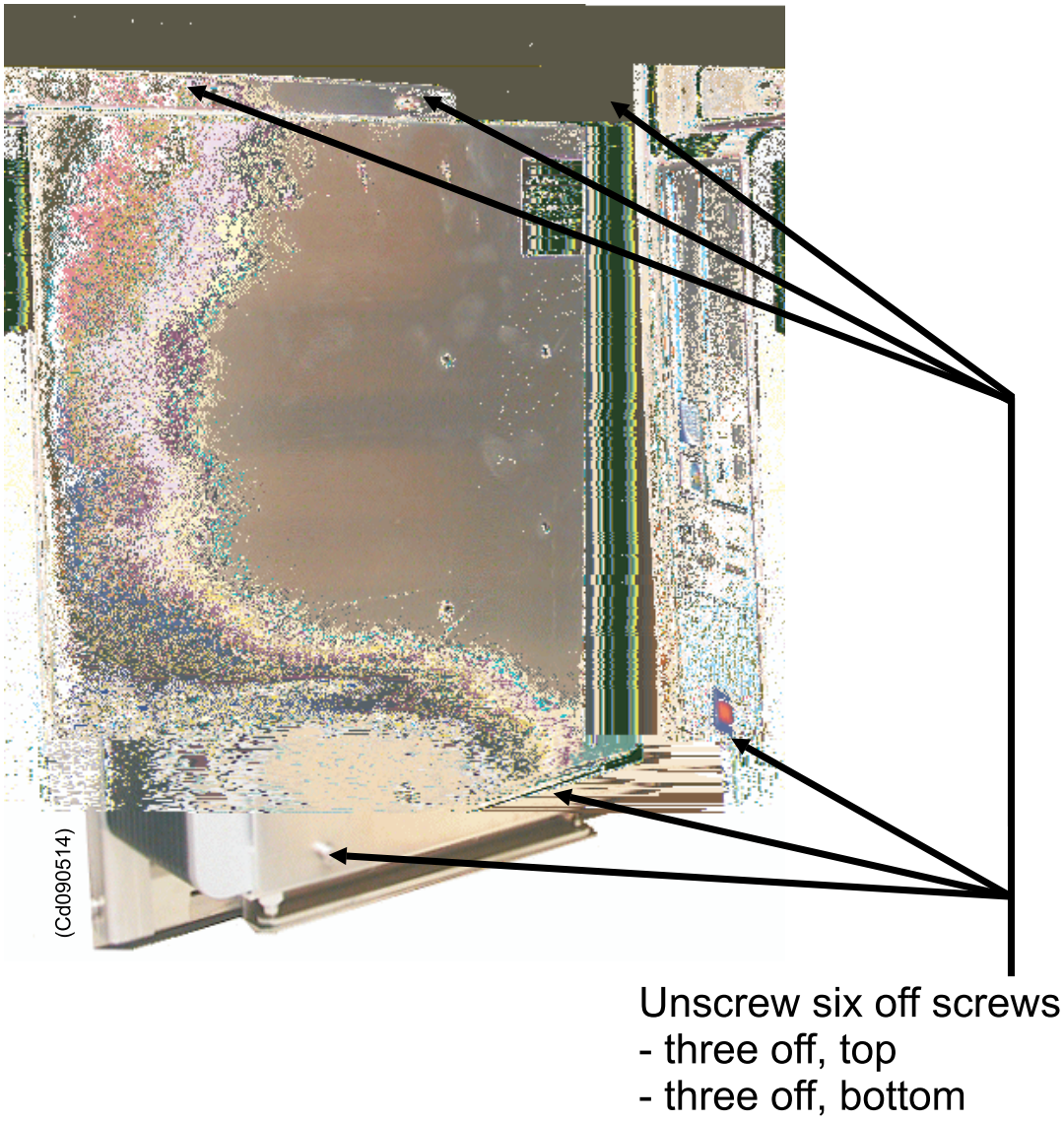

4 Carefully remove the computer and place aside.

Figure 10 Disconnecting cables

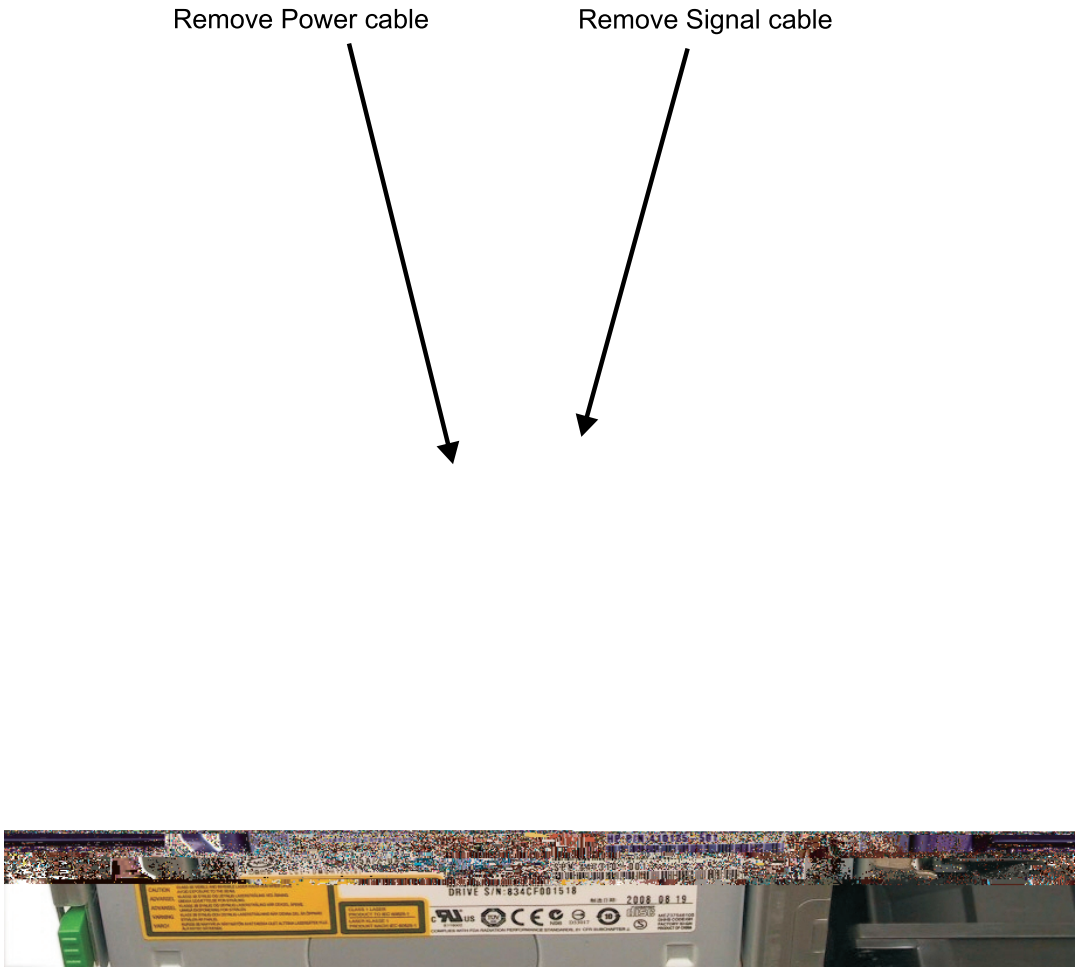

(Cd090517b)

3 Release the lock for DVD-RW drive by pushing the lever in, identified in figure below.

Figure 11 Releasing the lock lever

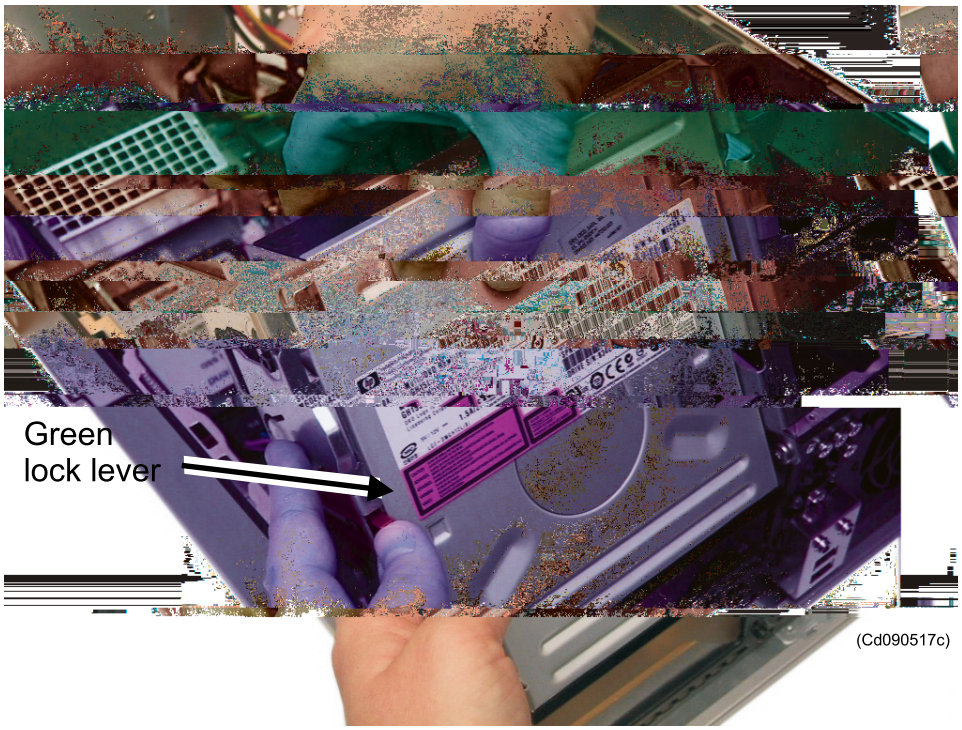

4 Carefully slide the drive out from its bracket.

5 Mark the DVD-RW with a label describing the symptoms observed, carefully pack in a shielding bag and place on a secure place.

Reassembly

1 Set any mode jumpers of the new drive to the same positions as for the replaced drive.

2 Reassemble by performing steps 1 to 4 of the *Disassembly* procedure above, in reverse order.

3 Verify proper drive operation.

How to replace the flash disk

The following steps must have been done before performing this procedure:

- The power to the MP7900 computer must have been turned off.
- Ensure that the new system flash disk drive is equal to the one listed in recommended consumable spare part list.
- The damper kit must have been removed from the computer, as described in *How to remove MP7900 computer from Damper kit* on page 23.
- The cabinet lid must have been removed from the computer, as described in *How to remove cabinet lid* on page 26.

Disassembly

1 Place the computer on a flat surface with the interface cards towards you.

2 Tilt the power supply assembly and the chassis for the DVD-RW drive in upwards direction, by pulling the green coloured handles.

Figure 12 Lifting the power supply

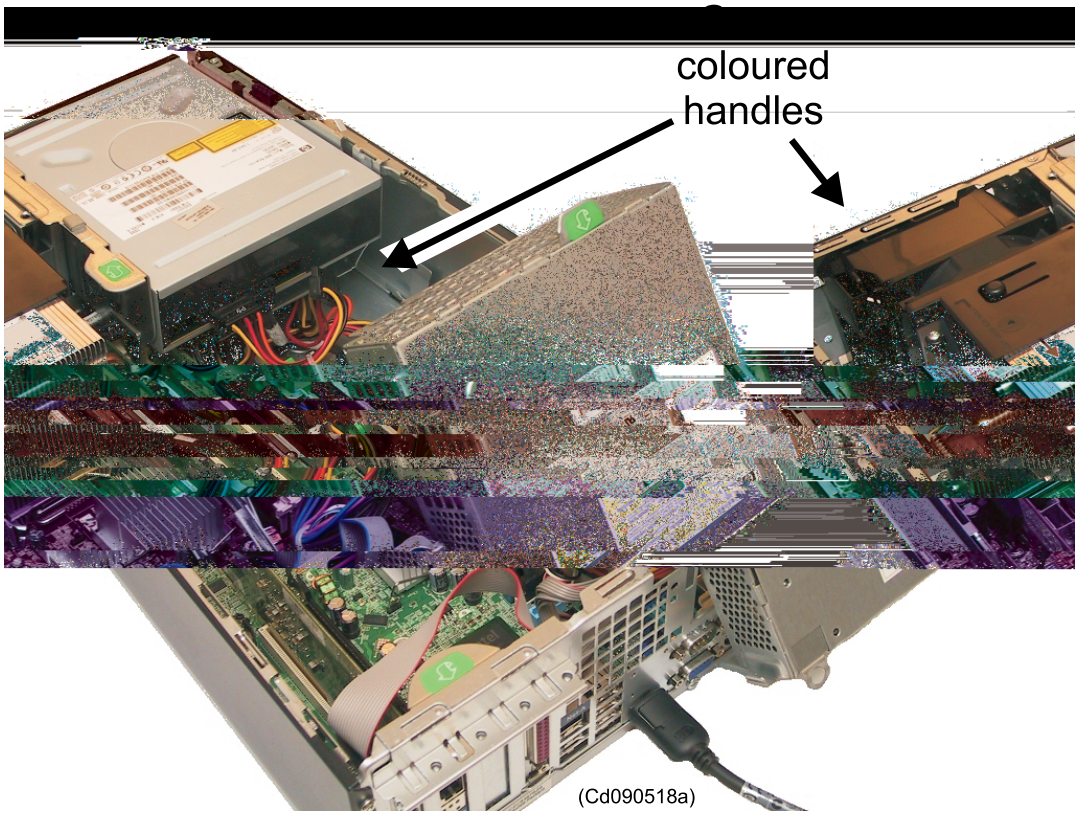

3 Disconnect and remove the 2 off flat cables from the disk, as identified in figure below:

Figure 13 Disconnecting cables

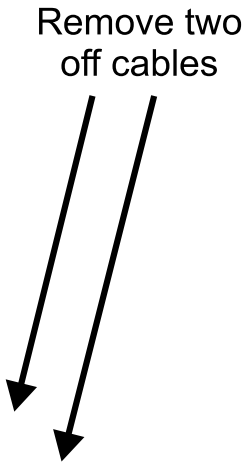

(Cd090518b)

4 Release the lock for the flash disk by pulling out, as identified in figure below:

Figure 14 Releasing the lock

5 Carefully slide the disk from its frame.

How to replace the hard disk drive for HS/DP Recorder

The HS/DP Recorder consists of one 32 GB Flash disk, containing system application, and two mirrored hard–disks (320 GB each) for recorded data.

Note

For each hard disk there is an indication LED in front. If the disk is defect the LED will be lit red.

Disassembly

Release the hard disk by opening the disk's front cover.

Figure 16 Hard disks

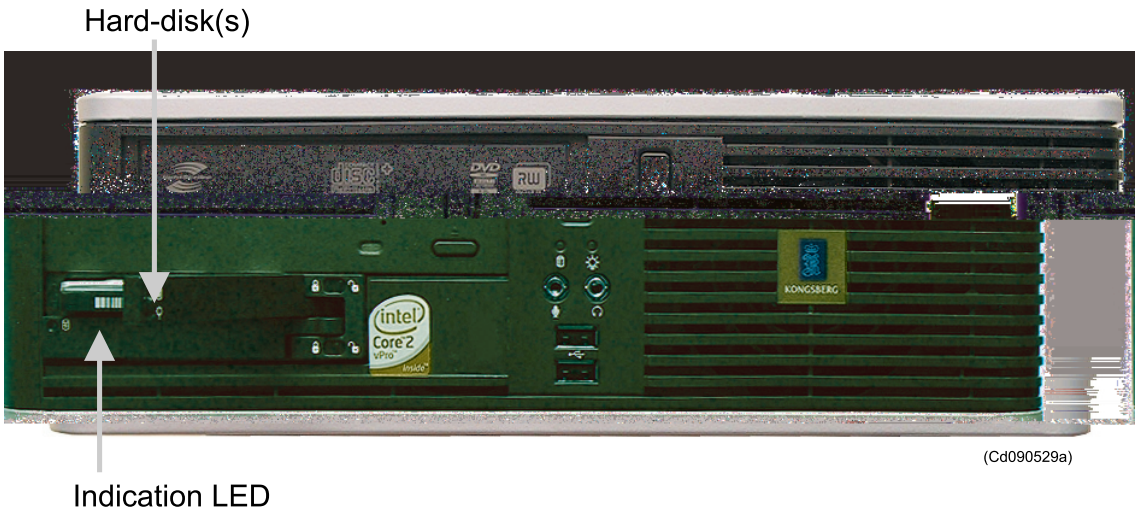

How to replace a socket-mounted PCI and PCIe card

Note

The PCI sockets are the two white sockets, and the PCIe socket is the black socket, refer to Cabinet interior on page 7.

Note

No screws are to be unscrewed to replace an interface card, only lifting the lever at the green coloured handle, which secures the interface card to the main board.

The following steps must have been done before performing this procedure:

- The power to the MP7900 computer must have been turned off.
- The cable must be removed from the interface card to be replaced.
- Ensure that the new card is equal to the one listed in recommended consumable spare part list.
- The kit must have been removed from the computer, as described in *How to remove MP7900 computer from Damper kit* on page 23.
- The cabinet lid must have been removed from the computer, as described in *How to remove cabinet lid* on page 26.

Disassembly

1 At the rear end of the computer, loosen the locking lever for the PCI cards by lifting the lever at the green coloured handle, as identified by figure below:

How to replace a RAM memory card

The following steps must have been performed before performing this procedure:

- The power to the MP7900 computer must have been turned off.
- Ensure that the RAM memory card is equal to the one listed in recommended consumable spare part list.
- The kit must have been removed from the computer, as described in *How to remove MP7900 computer from Damper kit* on page 23.
- The cabinet lid must have been removed from the computer, as described in *How to remove cabinet lid* on page 26.

Disassembly

1. Lift the power supply assembly and the DVD-RW assembly, as described in *How to replace the flash disk* on page 30.
2. Locate the RAM memory card inside the computer.
3. Lift assemblies according to *How to replace the flash disk* on page 30.
4. Remove the RAM memory card by pressing the ejectors at both ends of the memory card to release it from the socket, see figure below:

Figure 18 Memory card sockets with ejectors

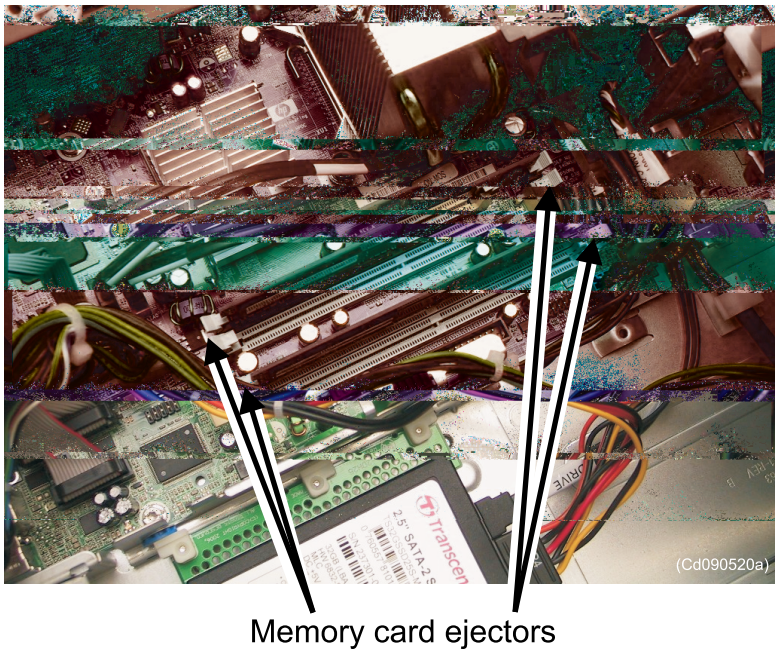

5. Mark the memory module with a label describing the symptoms observed, carefully pack in a shielding bag and place on a secure place.

Reassembly

1. Reassemble by performing step 1 to 3 of the *Disassembly* procedure, in reverse order.

2 Verify proper operation of MP7900.

How to replace the Power Supply model

The following steps must have been performed before performing this procedure:

- The power to the MP7900 computer must have been turned off.
- Ensure that the new power supply module is equal to the one listed in recommended consumable spare part list.
- The kit must have been removed from the computer, as described in *How to remove MP7900 computer from Damper kit* on page 23.
- The cabinet lid must have been removed from the computer, as described in *How to remove cabinet lid* on page 26.

Note

An error with the power supply module should be handled by Kongsberg Maritime Service Department only.

Disassembly

1 Tilt the power supply assembly and the DVD-RW assembly, as described in *How to replace the flash disk* on page 30.

Figure 19 Lifting the power supply assembly

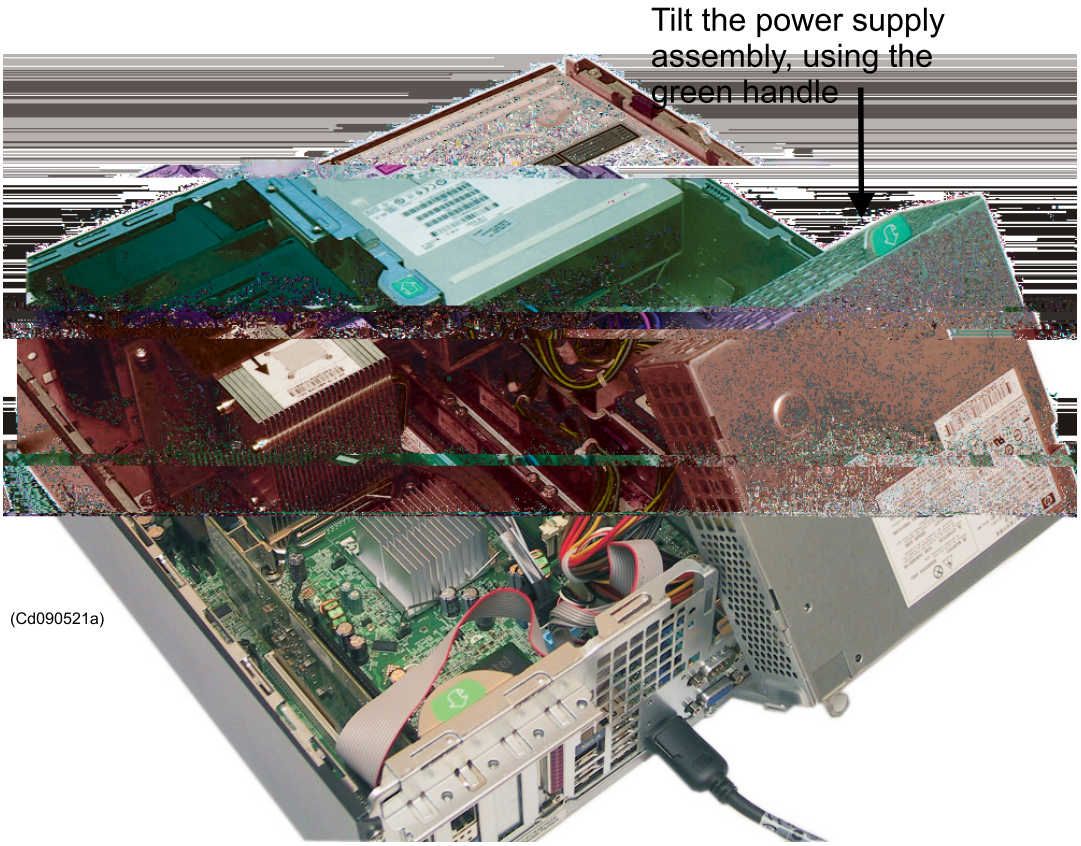

2 Disconnect 4 off power cables, refer to figure below:

Figure 20 Power cables

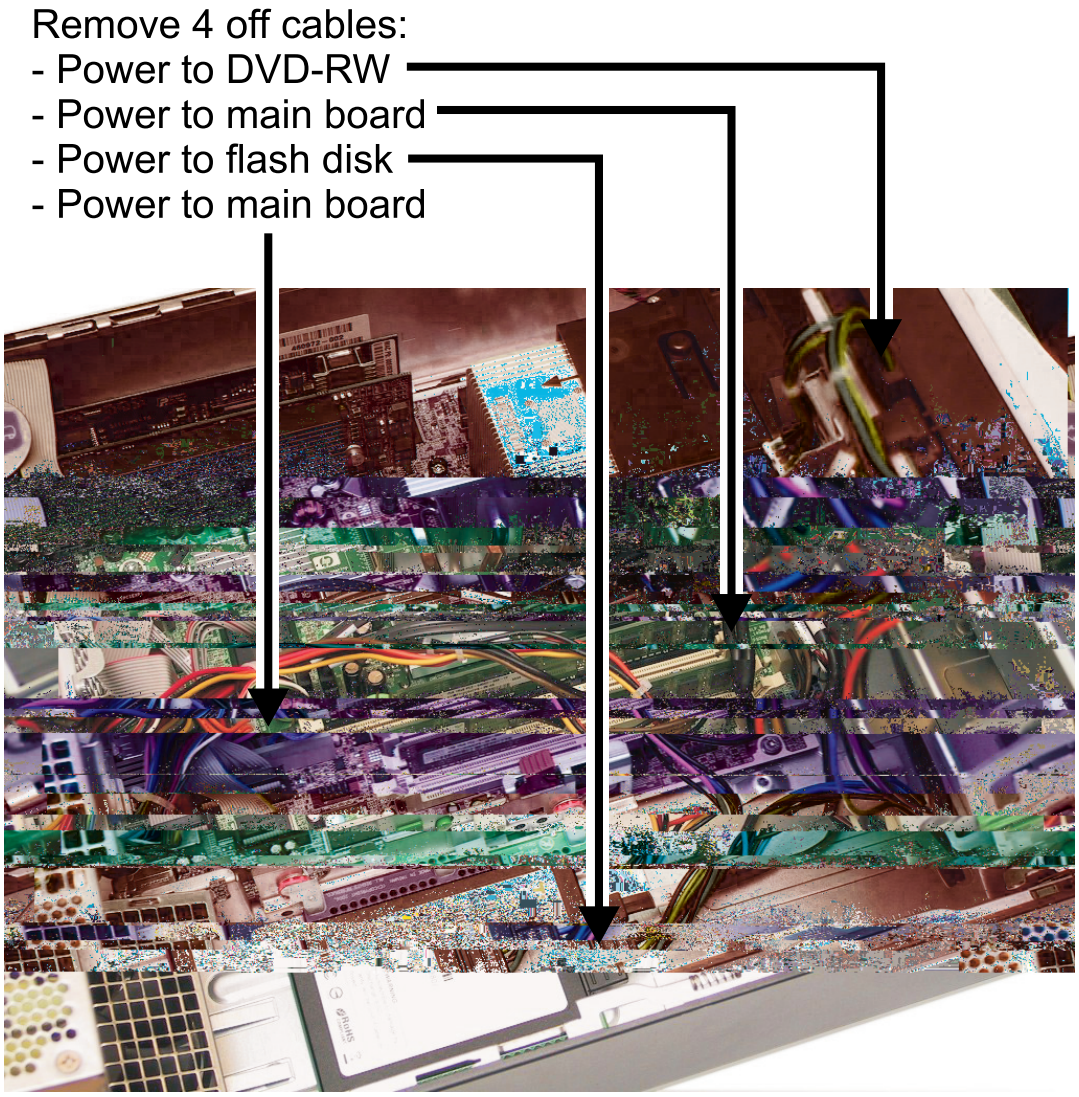

(Cd090521b)

3 When cables are removed, slide the power supply module towards the flash disk and out of the computer chassis by lifting upwards.

4 If necessary, use a cutter to remove the strips that keep the cable bundles together.

5 Mark the power supply module with a label describing the symptoms observed, carefully pack in a shielding bag and place on a secure place.

Reassembly

1 Reassemble by performing step 1 to 4 of the *Disassembly* procedure, in reverse order.

2 Verify proper operation of MP7900.

How to replace the Filter

Note

This procedure applies only to the MP7900 with LAN/CAN model.

The following steps must have been performed before performing this procedure:

- The power to the MP7900 computer must have been turned off.
- Check that the new filter is equal to the one listed in recommended consumable spare part list.
- The kit must have been removed from the computer, as described in *How to remove MP7900 computer from Damper kit* on page 23.
- The cabinet lid must have been removed from the computer, as described in *How to remove cabinet lid* on page 26.

Disassembly

1 For cabinets with filter, there is a screw in front. Unscrew this.

Figure 21 Filter screw

(Cd090522a)

2 Take off the front cover and locate the filter, refer to figure below:

Figure 22 Filter location

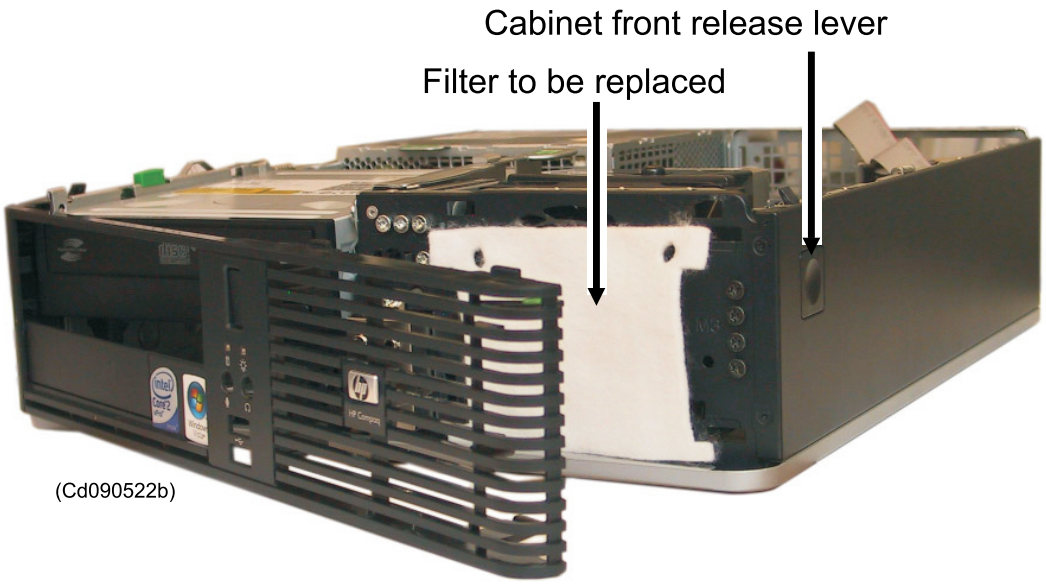

3 Carefully remove the filter inside the lid by snapping it off the lid.

Reassembly

Figure 23 New filter

1 Reassemble by inserting a new filter onto the lid.

2 Verify proper installation and fastening of the filter.

How to replace the CPU cooling fan

The following steps must have been performed before performing this procedure:

- The power to the MP7900 computer must have been turned off.
- Check that the new fan is equal to the one listed in recommended consumable spare part list.
- The kit must have been removed from the computer, as described in *How to remove MP7900 computer from Damper kit* on page 23.
- The cabinet lid must have been removed from the computer, as described in *How to remove cabinet lid* on page 26.
- The Plastic cover, covering the inlet fan must have been removed from inside the computer, see Figure 24.

Figure 24 Inside view of the computer

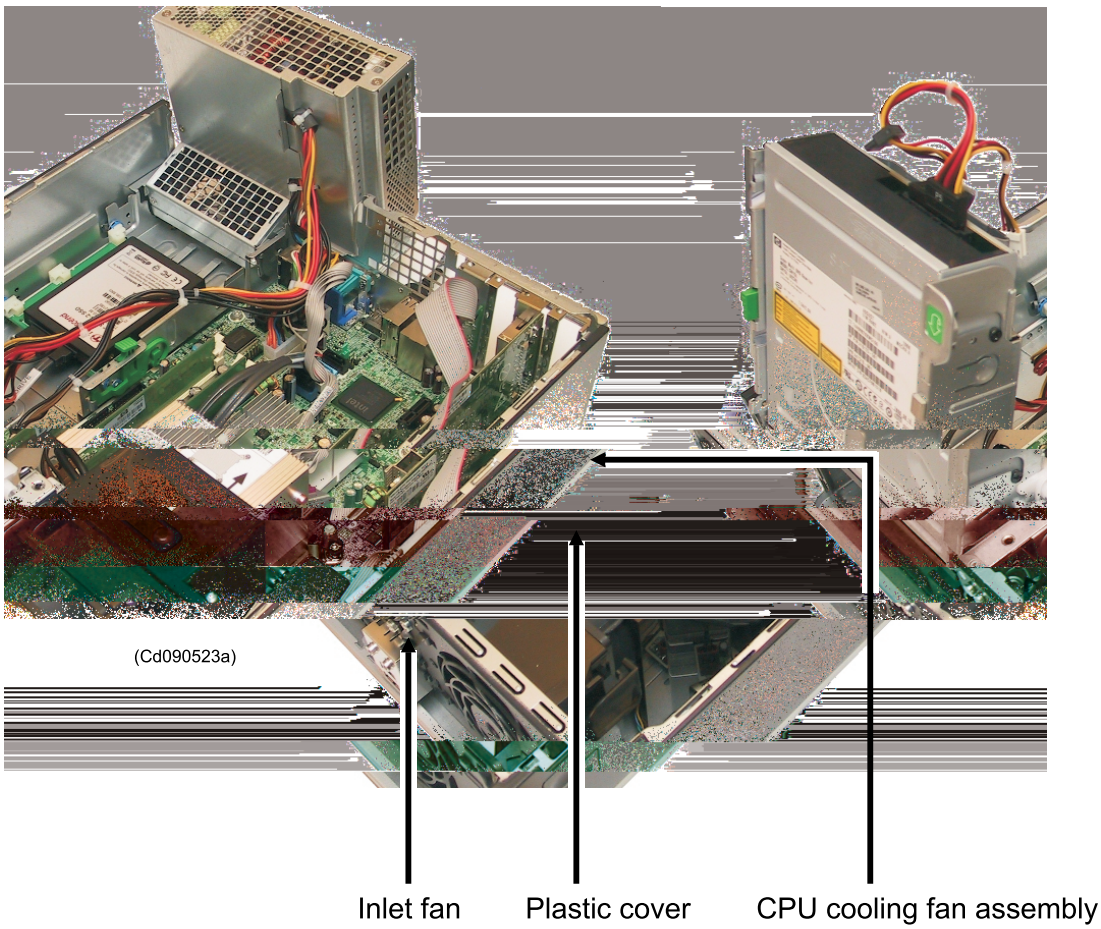

CPU fan

Disassembly

1 Locate the CPU fan inside the computer and remove the plastic cover, see Figure 24 and Figure 25.

Figure 25 Remove the plastic cover

2 From outside of the computer, unscrew 4 off screws, one in each corner of the fan assembly. See Figure 26.

Figure 26 Location of off screws

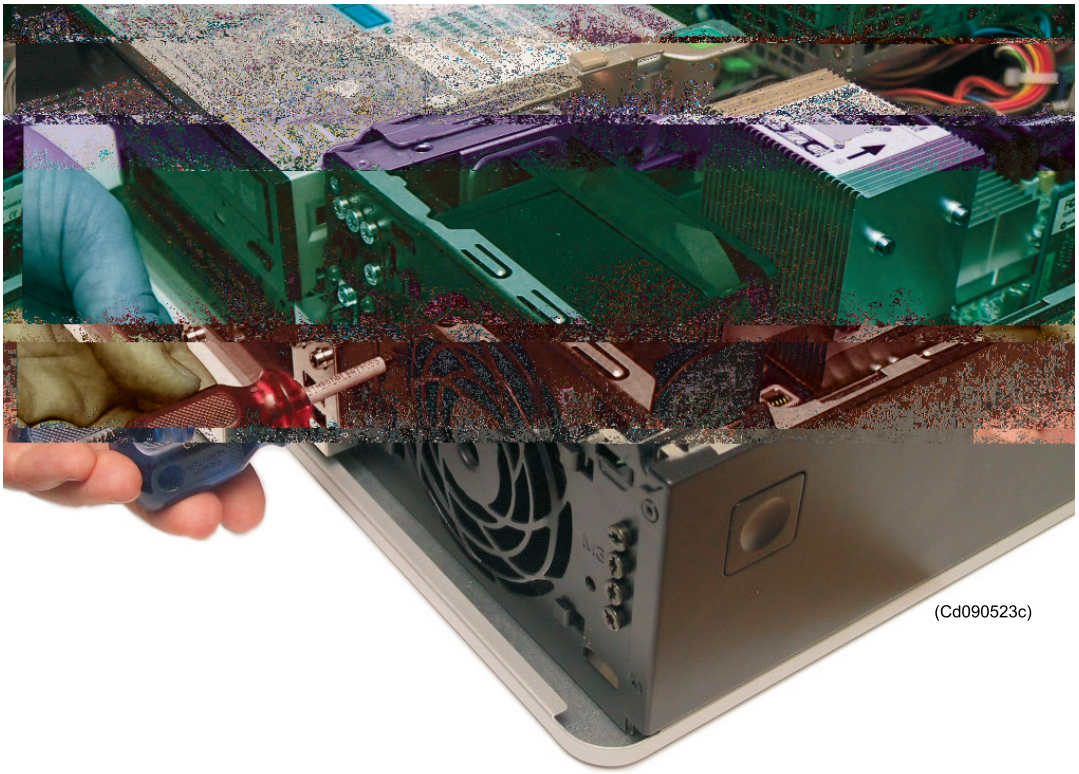

3 Lift the fan assembly carefully out of the computer. See Figure 27.

Figure 27 Remove the inlet fan

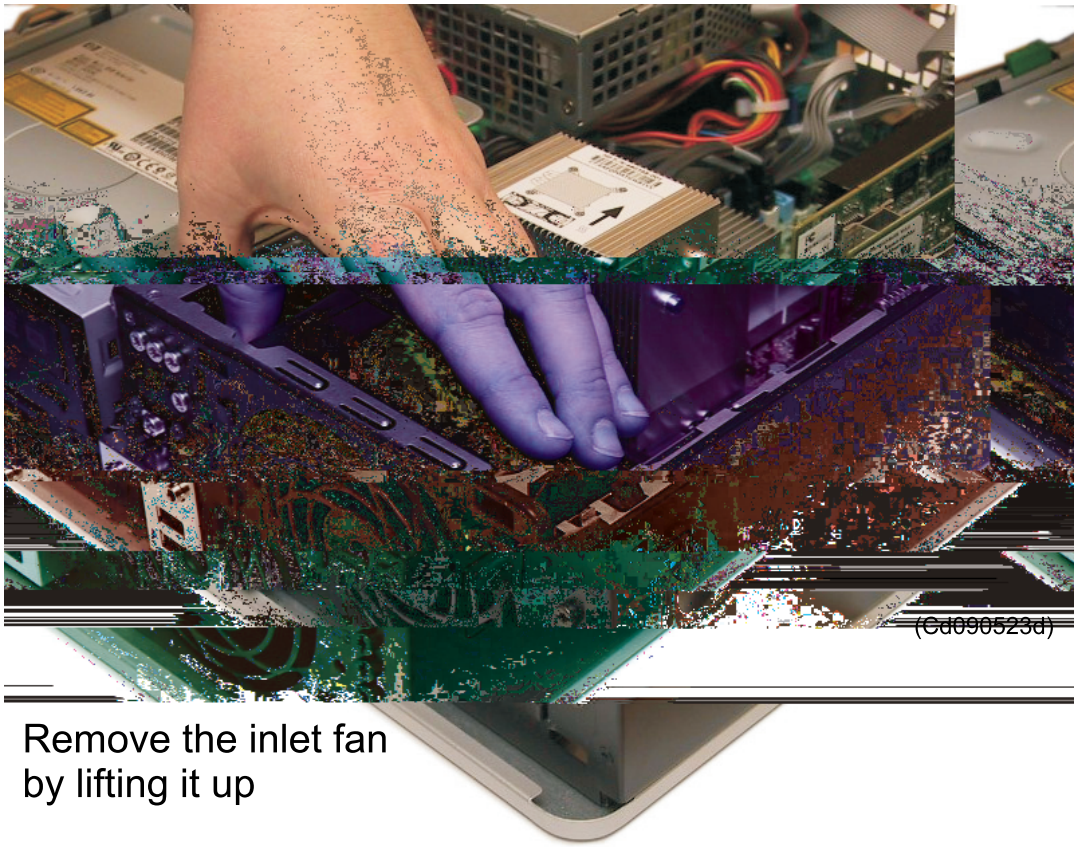

4 Disconnect the power cable for the CPU fan from the connector located on the motherboard of the computer, see Figure 28.

Figure 28 Disconnect the power cable

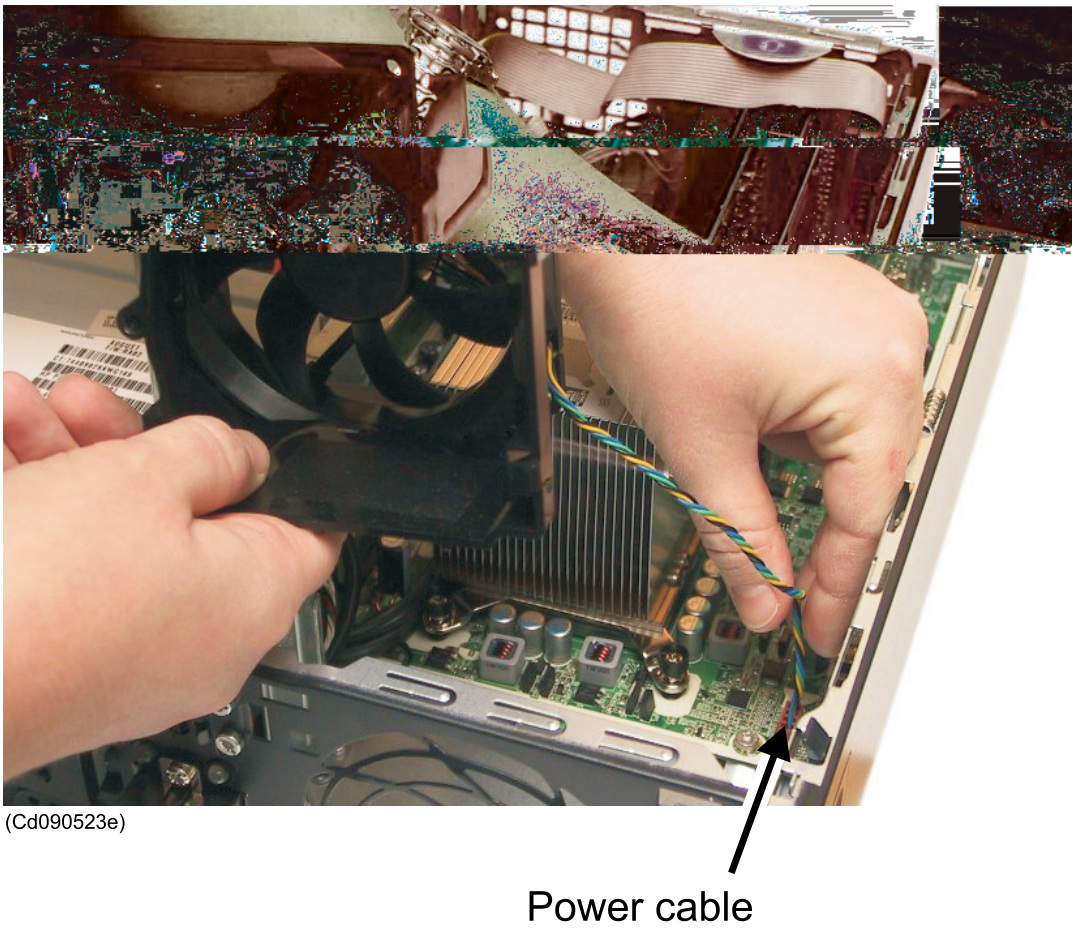

5 Mark the CPU fan with a label describing the symptoms observed, carefully pack in a shielding bag and place on a secure place.

Reassembly

1 Connect the power cable to the connector located on the motherboard of the computer, see Figure 25.

2 From the outside of the computer, screw the inlet fan to the computer by using the 4 off screws, one in each corner of the fan, see Figure 25.

3 Insert the plastic cover inside the computer, covering the inlet fan.

How to replace the CPU

Note

An fault with the CPU should be handled by Kongsberg Maritime Service Department.

How to replace the Main Board

Note

An fault with the main board should be handled by Kongsberg Maritime Service Department.

Figure 29 Typical MP7600 w/4 channel system (old termination board)

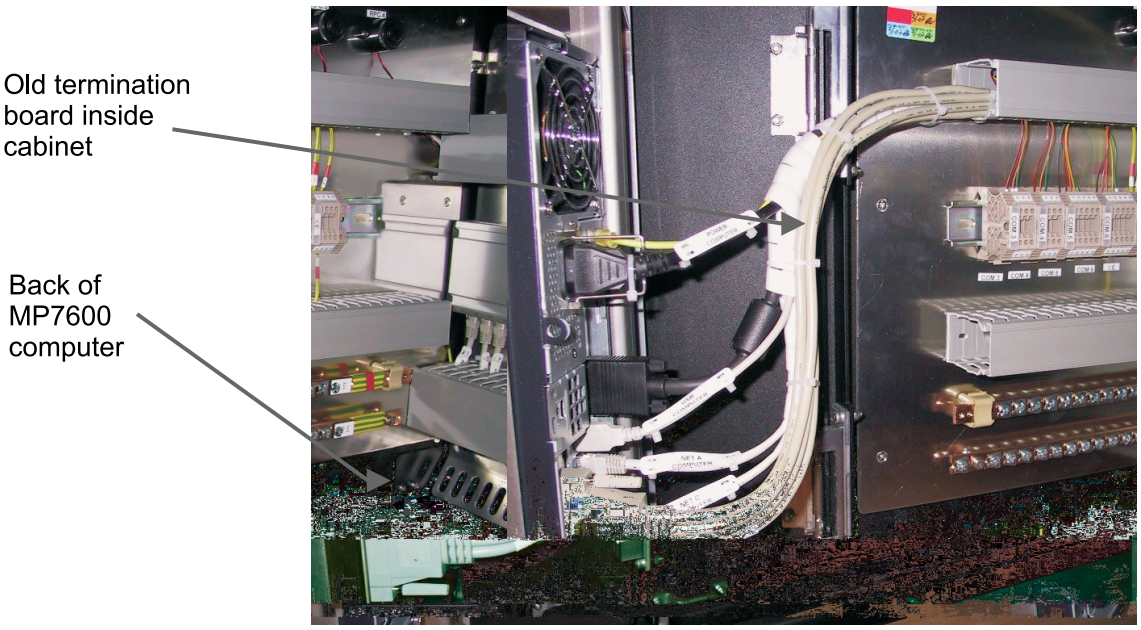

1 Unscrew and disconnect all the cables from the back of the MP7600 computer.

2 Perform the procedure *How to remove MP7900 computer from Damper kit* on page 23.

3 Then attach the new MP7900 computer with 8 channel BlueStorm card, by reversing the steps in procedure referred in step above.

4 Attach the cables to the back of the new computer.

5 Unscrew and disconnect the leads including the ground leads from the 4 channels on the computer side of the termination board.

Note

Channel 1 and 2 (RS232) uses 3 leads, and channel 3 and 4 (RS422/485) uses 5 leads.

6 Remove the disconnected cables from the cable tray.

7 Unscrew and disconnect leads including the ground leads from the 4 channels on the field side of the termination board.

Note

It is advisable to screw the leads including the ground leads from the field side directly onto the new loose termination boards (green termination boards) before removing the old termination boards from the metal bar.

8 Remove the 4 off old termination boards by snapping them off the metal bar, using a screwdriver at top of the termination board, see figure below:

Replaceable Parts and Consumables

This section contains lists of replaceable parts, recommended spare parts and consumables used in MP7900. Replacement procedures for the listed parts are mainly described in the Corrective maintenance chapter. No replacement procedures are normally supplied for the consumables.

Replaceable basic parts and recommended spare parts

The table shows replaceable basic parts and recommended spare parts for the computer.

List Ident.	Part Name	Recommended as Spare Part	Part Number
1	Power Supply, 437798-001	X	328791
2	Main board, 437793-001		
3	Hard disk drive 320 GB Western Digital, WD3200BJKT used as data storage in HS/DP Recorder 500 model.	X	328797
4	System disk, 128 GB, 2,5 SSD drive, Micron C400	X	367360
5	16X DVD-RW drive, 447310-001		328798
6	Memory AH058AA, 1GB DRAM	X	333337
7	Heat sink 480368–001		357589
8	CPU, Intel core duo E8400 processor, 466169-001		328804
9	HP Parallel Port Adapter, KP716AV		328805
10	Dual LAN card, Silicom Dual nic, ZV789AA		328807
11	Serial Port 2ND DC7100/ DC7600/DC7900SFF, PA716A		328815
12	2-screen graphic		

List Ident.	Part Name	Recommended as Spare Part	Part Number
15	RIC2 card, low profile (optional for MP7900 NAV)		6200455
16	Drive Module for two 2.5” sata HDD, ST-2221SATA		328831
17	Display port adapter: HP DisplayPort To DVI-D Adapter, KV902AV		328832
18	Serial interface; BlueStorm /LP Universal PCI serial card; 8 ports switchable RS232/422/485. BLG041–01		337533
19	Front fan 435452–001		357591
20	System disk, SSD 2.5”, 128 GB CORSAIR P128. For use in LAN/CAN Windows 7 model		346458
21	LAN kit MP7900 LAN/CAN model		357584
22	USB Backup Disk, 500 GB		364703

Consumables

List Ident.	Part Name	Recommended as Spare Part	Part Number
1	System Backup DVD	X	329905
2	Filter for MP7900 computer, for LAN/CAN model	X	329906
3	XP-image		337873

©2013 Kongsberg Maritime